THIS IS A CONTRACTOR QUALITY CONTROL PROJECT

DEPARTMENT OF THE NAVY

ATLANTIC DIVISION, NAVAL FACILITIES ENGINEERING COMMAND

NAVAL STATION, NORFOLK, VIRGINIA

NOTICE:

Bids to be opened at 2:00 p.m.

27 FEBRUARY 1979

at the Atlantic Division
Naval Facilities Engineering Command
Naval Station, Norfolk, Virginia 23511

N62470-77-B-7526

NAVFAC
SPECIFICATION
NO. 05-77-7526

Appropriation:
MCON

205 BED HOSPITAL

at the

NAVAL REGIONAL MEDICAL CENTER

MARINE CORPS BASE, CAMP LEJEUNE, NORTH CAROLINA

DESIGN BY: Lockwood Greene Engineers, Inc./Six Associates, Inc.
(A Joint Venture)
Spartanburg, South Carolina

SPECIFICATION PREPARED BY:

Architectural: Billy V. Hardin
Civil: Robert E. Turner
Structural: Billy V. Hardin
Fire Protection: Michael W. Jones
Approved by: James C. Curry

Mechanical: Michael W. Jones
Electrical: Edward G. Hemrick
Instrumentation: Daniel W. Flynn

Date: 4 December 1978

SPECIFICATION APPROVED BY:

Specification Branch Head: C. M. TENNEFOSS, R.A.
Design Director: J. M. DAVIS, P.E.
For EFD for Commander, NAVFAC:
Date: 5 December 1978

CONTENTS

SECTION 00101. Bidding Information

DIVISION

1. General Requirements
   SECTION
   01011. General Paragraphs
   01012. Additional General Paragraphs
   01400. Quality Control (For CQC Projects)
   01501. Environmental Protection
2. Site Work
   SECTION
   02200. Earthwork
   02250. Soil Treatment for Termite Control
   02312. Prestressed Concrete Piling
   02501. Storm Drainage Systems
   02608. Bituminous Concrete Pavement
   02609. Pavement Removal and Replacement
   02613. Portland Cement Concrete Pavement for Helipad
   02614. Joints and Mooring Eyes in Concrete Pavements
   02699. Marking of Airfield Pavements
   02711. Fence, Chain-Link
   02712. Yard Accessories
   02713. Sprinkler Irrigation
   02822. Establishing Vegetation
   02831. Planting Trees, Shrubs, and Ground Covers
3. Concrete
   SECTION
   03300. Cast In Place Concrete
4. Masonry
   SECTION
   04200. Brick and Concrete Masonry Unit Work
   04390. Brick Pavers
5. Metals: Structural & Miscellaneous
   SECTION
   05120. Structural Steel
   05200. Open Web Steel Joists
   05320. Steel Roof Decks
   05322. Steel Deck and Plate for Sloping Brick Sill
   05420. Metal Framing and Furring
   05500. Metal Fabrications
   05810. Prefabricated Expansion Joints
6. Carpentry
   SECTION
   06100. Rough Carpentry
   06400. Architectural Woodwork and Finish Carpentry

7. Moisture Protection

SECTION

07111. Elastomeric Membrane Waterproofing
07160. Bituminous Dampproofing
07210. Perimeter Insulation
07215. Sprayed-On Insulation
07221. Masonry Wall Insulation
07232. Ceiling and Wall Insulation
07241. Roof Insulation
07245. Expanded Polystyrene Aggregate Roof Fill
07411. Preformed Metal Siding
07412. Preformed Metal Roofing and Fascia
07420. Composite Metal Siding
07510. Built-Up Bituminous Roofing
07600. Flashing and Sheet Metal
07810. Skylights
07831. Roof Access Hatch
07951. Calking

8. Doors, Windows, and Glass

SECTION

08110. Hollow Metal Doors and Frames
08112. Sound Retardant Doors and Frames
08120. Aluminum Swinging Doors and Frames
08122. Aluminum Mall Front Units
08130. Aluminum Automatic Entrances
08165. Automatic Door Operators
08210. Wood Doors
08240. Architectural Wood Door With Glass-Metal Clad
08301. Vault Doors
08330. Coiling Steel Service Doors
08335. Security Grille
08375. Glass Doors
08515. Aluminum Window Wall System
08516. Aluminum Dispatch Window
08517. Interior Insulated Windows With Blinds
08535. Roll-Up Pass Windows and Counter Shutters
08537. Sliding Pass Windows
08710. Finish Hardware
08810. Glass and Glazing
08850. Total Vision Glazing System
08855. Flush Glazing System

9. Finishes

SECTION

09101. Metal Lathing
09150. Plastering and Stuccoing
09161. Veneer Plaster
09250. Gypsum Wallboard
09261. Gypsum Wallboard Cavity Shaft Walls
09310. Tile Work
09330. Acid-Resisting Quarry Tile Floors

09500. Acoustical Treatment
09531. Sheet Lead Sound Barrier
09562. Slat Flooring
09650. Resilient Flooring
09655. Seamless Flooring
09682. Carpet
09725. Epoxy Topping
09910. Field Painting
09952. Wall Covering

10. Specialties

SECTION
10101. Chalkboards
10162. Metal Toilet Partitions
10202. Exterior Wall Louvers
10203. Metal Door Louvers
10250. Firefighting Devices
10261. Corner Guards and Bumper Guards
10350. Flagpoles
10412. Recessed Bulletin Boards
10441. Interior Signage
10442. Exterior Signage
10550. Postal Specialties
10601. Wire Mesh Partitions
10625. Operable Wall
10750. Wardrobe Units
10801. Metal Toilet and Bath Accessories

11. Equipment

SECTION
11181. Projection Screen
11201. Ecclesiastical Cabinet
11400. Food Service Equipment
11700. General Requirements for Medical Equipment
11701. Casework, Metal and Wood
11702. Medical Equipment, Miscellaneous
11704. Laboratory Equipment and Fumehoods
11705. Laboratory, Morgue, Medical and Pharmacy Refrigerators and Ice Makers
11713. Surgical Lighting Fixtures
11716. Hydrotherapy Equipment
11730. Washing Equipment
11744. Dental Equipment
11757. Radiographic Darkroom Equipment
11797. Government Furnished Medical and Dental Equipment, Contractor Rough-In and Government Installed, and Contractor Installed
11798. Prefabricated Audiometric Rooms
11799. Government Furnished and Contractor Installed Existing Medical Equipment
11868. Pathological Incinerator
11872. Dock Levelers and Bumpers
11881. Detention Screens

DELETED

12. Furnishings
    SECTION
    12510. Electric Drapery Tracks
13. Special Construction
    SECTION
    13451. Refrigerated Room
    13712. Radio Frequency Shielding
    13750. Radiation Protection
    13942X. Energy Monitoring and Control Systems (EMCS) ~~Field~~ Interface Materials
14. Conveying Systems
    SECTION
    14200. Electric Elevators
    14220. Hydraulic Passenger Elevators
    14400. Motor Vehicle Lift
    14555. Linen Chute
15. Mechanical
    SECTION
    15011. General Requirements, Mechanical
    15012. Supports and Sleeves
    15160. Insulation of Mechanical Systems
    15272. Water Distribution
    15301. Exterior Sanitary Gravity Sewers
    15302. Force Main Sewers
    15350. Sewage Pump Station
    15401. Plumbing
    15402. Vacuum Cleaning Systems
    15403. Nonflammable Medical Gas Systems
    15404. Pneumatic Tube System
    15407. Gas Piping
    15514. Sprinkler Systems
    15516. Fire Pumps
    15601. Cast Iron Hot Water Boiler
    15611. Fuel Oil Handling System
    15631. Steam Boilers and Equipment ~~(500,000 - 10,000,000 BTU/HR.)~~
    15652. Central Refrigeration Equipment for Air Conditioning
    15654. Refrigeration Equipment for Refrigerated Storage Room
    15711. Hot Water Heating and Chilled Water Cooling System
    15721. Solar Domestic Hot Water Generating System
    15723. Steam Distribution
    15771. Split System Air Conditioning Systems
    15802. Air Supply Systems
    15907. Testing and Balancing Air and Water Systems
    15911. Temperature and Humidity Controls
16. Electrical
    SECTION
    16011. General Requirements, Electrical
    16113. Underfloor Duct System
    16201. Emergency Power System
    16300. Electrical Distribution, Exterior
    16402. Interior Wiring Systems

16450. Grounding
16465. Transformers, Substations and Switchgear, Interior
16492. Electrical Systems for Critical Care and Inhalation Anesthetizing Locations
16510. Lighting, Interior
16530. Lighting, Exterior
16610. Lightning Protection System
16721. Manual and Automatic Fire Alarm Systems
16730. Sound System - Radio Entertainment
16740. Public Address Area Paging System
16760. Security System
16770. Broadband Communication System and Master Antenna Television System
16780. Dictating Conduit System
16790. Intercommunication System
16791X. Telephone Cable Site Distribution System
16792 Computer Power System (UPS)

Representations and Certifications, Bid Guaranty, and Clean Air and Water Certification, all in accordance with the Bid Instruction Documents listed in paragraph 1(a) hereinbefore upon the following item(s):

Base Bid

(a) Price for the entire work, complete in accordance with the drawings and specifications, but excluding foundation piling and pile load tests and work described in Additive Item Nos. 1 through 4. Seeding is included in Base Bid. Ground cover (ECOL) on the slopes at the Emergency Entrance Drive is included in Base Bid. Planting trees, shrubs, and ground covers in Atrium is included in Base Bid.

(b) Price for foundation piling and pile load test, complete in accordance with the drawings and specifications and in accordance with the following schedule:

ITEM	UNIT	UNIT PRICE	NO. UNITS	EXTENSION
Piling	Linear Feet	_____	100,095	$_____
Pile Load Test	Each	_____	3	$_____

Additive Item No. 1: Price for adding Public Works Building in accordance with drawings and specifications.

"Additive Item No. 2: Price for adding helipad complete and adding exterior planting trees, shrubs, and ground covers in accordance with drawings and specifications. Planting trees, shrubs, and ground covers in Atrium is included in Base Bid.

Additive Item No. 3: Price for adding Holcombe Boulevard widening and intersection improvements, adding pneumatic tube system, and adding two 20,000 gallon chilled water storage tanks in accordance with drawings and specifications.

Additive Item No. 4: Price for adding solar energy system in accordance with drawings and specifications."

NOTES: 1. The unit and lump sum prices for various items in the schedule above shall be deemed to include all costs required for the specified work, complete in accordance with the drawings and specifications, including all materials, labor, equipment, tools, supervision and related items.

2. The low conforming bidder for Base Bid will be determined by the sum of the lump sums bid under Base Bid (a) and the sum of the

Additive Item No. 4: Immediately following "solar energy system" insert ", condenser water heat recovery system and associated piping,"

extensions under Base Bid (b). For Base Bid (b), bidders shall enter the unit prices and the extended totals in the spaces provided. Should there be a discrepancy between the unit prices and the extended totals, the unit prices shall govern.

3. Evaluation of Bids. The funds available for this project, known as the control amount, will be recorded prior to bid opening and announced at bid opening. The low bidder for purposes of award shall be determined in accordance with the provision of this solicitation entitled "Additive or Deductive Items, Clause 21 of the Instruction to Bidders".

2.4 Telegraphic Modifications Of Bids in accordance with the Instructions to Bidders may be made. Two signed copies of the telegram in a sealed envelope marked "Copies of telegraphic modification of bid for 205 Bed Hospital at the Naval Regional Medical Center, Marine Corps Base, Camp LeJeune, North Carolina, Specification No. 05-77-7526" should be forwarded immediately to the office to which the written bids were submitted.

2.5 Telegraphic Modifications Or Withdrawal Of Bids. Telegraphic modifications or withdrawal of bids will be considered as specified herein. TELEPHONIC RECEIPT OF TELEGRAPHIC MODIFICATIONS OR WITHDRAWAL OF BIDS WILL NOT QUALIFY THE TELEGRAM AS TIMELY. The telegram must be received at the place specified for receipt of bids prior to the exact time set for receipt of bids.

2.6 Hand Delivered Bids: All hand delivered bids must be deposited in the bid box at the Atlantic Division, Naval Facilities Engineering Command, Contract Division, Room No. 105, Building N-21, Naval Station, Norfolk, Virginia, prior to the time and date set for bid opening. Any bids submitted by hand after the time set for receipt will not be accepted.

3. PRE-BID SITE VISITATION: To inspect the site of the work prior to bid opening, prior appointment must be made with the Resident Officer in Charge of Construction for Hospital Replacement, Naval Regional Medical Center, Camp LeJeune, North Carolina, telephone: (919) 451-4418. Bidders are urged and expected to inspect the site where services are to be performed and to satisfy themselves as to all general and local conditions that may affect the cost of performance of the contract to the extent such information is reasonably obtainable. In no event will a failure to inspect the site constitute grounds for withdrawal of a bid after opening or for a claim after award of the contract.

4. CONTROLLED MATERIALS DATA: The Contracting Officer will issue a DO-C2 priority rating for procurement of critical materials. See GENERAL PROVISION 48, "PRIORITIES, ALLOCATIONS AND ALLOTMENTS".

5. INQUIRIES: All questions concerning the bidding or any other phase of the plans and specifications occuring prior to bid opening shall be presented to the Design Division, Atlantic Division, Naval Facilities Engineering Command, Building N-26, Room 307, Naval Station, Norfolk, Virginia

23511, telephone 444-7631, area code 804. Questions requiring interpretation of drawings and specifications must be submitted at least 10 days before bid opening. Interpretations or modifications to specifications made as a result of questions will be made by amendment only, and unless so done, all bidders should base their bids on the plans and specifications as issued.

6. AVAILABILITY OF SPECIFICATIONS, STANDARDS AND DESCRIPTIONS (1977 JUN): Specifications, standards and descriptions cited in this solicitation are available as indicated below:

(a) Unclassified Federal, Military and Other Specifications and Standards (Excluding Commercial), and Data Item Descriptions. Submit request on DD Form 1425 (Specifications and Standards Requisition) to:

Commanding Officer
U. S. Naval Publications and Forms Center
5801 Tabor Avenue -- Philadelphia, PA 19120

The Acquisition Management Systems and Data Requirements Control List, DoD Directive 5000.19-L, Volume II, may be ordered on the DD Form 1425. The Department of Defense Index of Specifications and Standards (DODISS) may be purchased from the Superintendent of Documents, U. S. Government Printing Office, Washington, D.C., 20402. When requesting a specification or standard, the request shall indicate the title, number, date and any applicable amendment thereto by number and date. When requesting a data item description, the request may be submitted in letter form, giving the same information as listed above, and the solicitation or contract number involved. Such request may also be made to the activity by Telex No. 834295, Western Union No. 710-670-1685, or telephone (area code 215, 697-3321) in case of urgency.

(b) Commercial Specifications, Standards and Descriptions: These specifications, standards and descriptions are not available from Government sources. They may be obtained from the publishers.

(c) Availability for Examination of Specifications, Standards, Plans, Drawings, and Other Pertinent Documents: The specifications, standards, plans, drawings, and other pertinent documents cited in this solicitation may be examined at the following location:

Atlantic Division, Naval Facilities Engineering Command
Design Division, Specifications Branch,
Code 406, Room 395, Building N-26
Naval Station, Norfolk, Virginia 23511

7. REFERENCE TO AMENDMENTS: Each bidder shall refer in his bid to all amendments to this specification; failure to do so may constitute an informality in the bid.

Atlantic Division, Naval Facilities Engineering Command
Naval Station, Norfolk, Virginia 23511
4 December 1978

C. C. HEID, RADM, CEC, USN
Contracting Officer

---END---

DIVISION 1. GENERAL REQUIREMENTS

SECTION 01011. General Paragraphs
01012. Additional General Paragraphs
01400. Quality Control (For CQC Projects)
01501. Environmental Protection

SECTION 01011. GENERAL PARAGRAPHS

1. GENERAL INTENTION: It is the declared and acknowledged intention and meaning to provide and secure 205 Bed Hospital, complete and ready to use.

2. GENERAL DESCRIPTION: The work includes a four story 205 bed hospital with basement, ancillary facilities, outpatient clinic, and incidental related work.

3. LOCATION: The work shall be located at the Marine Corps Base, Camp Lejeune, North Carolina approximately as shown. The exact location will be indicated by the Contracting Officer.

4. COMMENCEMENT, PROSECUTION, AND COMPLETION OF WORK: The Contractor will be required to commence work under the contract 15 calender days after the date of "Notice of Award", to prosecute said work diligently, and to complete the entire work ready for use within 1110 calender days. ~~If the Public Works Building, "Bid Additive Item No. 1," is awarded to the Contractor, complete work required by such Bid Additive within 540 calendar days~~. The times stated for completion shall include final cleanup of the premises. The contract completion dates will be computed starting 15 calendar days after the date of the Notice of Award. This 15 day period is to allow for mailing of the Notice of Award and the Contractor's submission of required bonds.

5. LIQUIDATED DAMAGES: In case of failure on the part of the Contractor to complete the work within the time fixed in the contract or any extensions thereof, the Contractor shall pay to the Government as liquidated damages pursuant to Clause 5, "Termination for Default - Damages for Delay - Time Extensions," and Clause 80, "Damages for Delay - Defense Materials System and Priorities" of the General Provisions the sum of:

$4,600.00 for each day of delay in completion of entire work.
$ 100.00 for each day of delay in completion of Public Works Building.

6. DRAWINGS ACCOMPANYING SPECIFICATION: The following drawings accompany this specification and are a part thereof. Drawings are the property of the Government and shall not be used for any purpose other than that contemplated by the specification. The drawings included with this specification are half-size. Full-size drawings are available at the bidder's or Contractor's expense. Information on procuring these full-size drawings

"If the Public Works Building, "Bid Additive Item No. 1", is awarded to the Contractor, complete work required by such Bid Additive within first 540 calendar days."

may be obtained from the Contracting Officer. Full-size drawings may be inspected during regular working hours at the office of the Contracting Officer.

EFD Dwg. No.	NAVFAC Dwg. No.	Title
143468	4043468	Cover Sheet
143469	4043469	Volume Index
143470	4043470	Drawing Index
143471	4043471	Drawing Index
143472	4043472	Drawing Index
143473	4043473	Drawing Index
143474	4043474 R	Soil Boring Plan and Logs
143475	4043475	Soil Boring Logs
143476	4043476	Soil Boring Logs
143477	4043477	Soil Boring Logs
143478	4043478	Soil Boring Logs
143479	4043479	Soil Boring Logs
143480	4043480	Soil Boring Logs
143481	4043481	Soil Boring Logs
143482	4043482	Soil Boring Logs
143483	4043483	Soil Boring Logs
143484	4043484	Soil Boring Logs
143485	4043485	Soil Boring Logs
143486	4043486	Soil Boring Logs
143487	4043487 R	Composite Plan Layout, Pavements, Walks
143488	4043488	Plan Layout, Pavements, Walks
143489	4043489	Plan Layout, Pavements, Walks
143490	4043490	Plan Layout, Pavements, Walks
143491	4043491	Plan Layout, Pavements, Walks
143492	4043492 R	Plan Layout, Pavements, Walks
143493	4043493 R	Plan Layout, Pavements, Walks
143494	4043494 R	Plan Layout, Pavements, Walks
143495	4043495	Plan Layout, Pavements, Walks
143496	4043496 R	Plan Layout, Pavements, Walks
143497	4043497	Profiles & Sections Street A
143498	4043498	Profiles Street A
143499	4043499	Profiles Streets B & E
143500	4043500	Profiles & Section Street C
143501	4043501	Profiles & Section Street D
143502	4043502	Details Helipad & Other Pads
143503	4043503	Details Walks, Curbs
143504	4043504	Details Layout, Pavements, Walks
143505	4043505	Details Layout, Pavements, Walks
143506	4043506	Parking Details
143507	4043507	Details - Exercise Area
143508	4043508	Composite Plan Grading & Drainage
143509	4043509	Plan Grading & Drainage
143510	4043510	Plan Grading & Drainage

143511	4043511	Plan Grading & Drainage
143512	4043512	Plan Grading & Drainage
143513	4043513	Plan Grading & Drainage
143514	4043514	Plan Grading & Drainage
143515	4043515	Plan Grading & Drainage
143516	4043516	Plan Grading & Drainage
143517	4043517	Plan Grading & Drainage
143518	4043518	Enlarged Plan Visitor & Outpatient Plaza
143519	4043519	Enlarged Plan Staff Plaza & Details
143520	4043520	Profiles Storm Drains
143521	4043522	Profiles Storm Drains
143522	4043522	Profiles Storm Drains
143523	4043523	Profiles Storm Drains
143524	4043524	Details - Storm Drains
143525	4043525 R	Composite Plan Site Utilities
143526	4043526	Plan Site Utilities
143527	4043527	Plan Site Utilities
143528	4043528	Plan Site Utilities
143529	4043529	Plan Site Utilities
143530	4043530 R	Plan Site Utilities
143531	4043531 R	Plan Site Utilities
143532	4043532 R	Plan Site Utilities
143533	4043533 R	Plan Site Utilities
143534	4043534	Plan Site Utilities
143535	4043535	Enlarged Plan Site Utilities
143536	4043536	Profiles Sanitary Sewer
143537	4043537	Exterior Signage & Details
143538	4043538	Sewage Pump Station Plan & Details
143539	4043539	Sewage Pump Station Details
143540	4043540	Sewage Pump Station Details
143541	4043541	Telephone Routing Plan
143542	4043542	Telephone Routing Plan
143543	4043543	Plan - Improvements to Holcomb Boulevard
143544	4043544	Plan & Details Holcomb Boulevard
143545	4043545	Cross Sections
143546	4043546	Cross Sections
143547	4043547	Cross Sections
143548	4043548	Cross Sections & Details
143549	4043549	Cross Sections & Details
143550	4043550	Boring Log Holcomb Boulevard
143551	4043551	Plan & Plant List Planting
143552	4043552	Plans & Details Planting
143553	4043553	Plans Planting
143554	4043554	Plans Planting
143555	4043555	Details - Atrium
143556	4043556	Architectural Symbols
143557	4043557	Plan - Crawl Space, Area A
143558	4043558	Plan - Crawl Space, Area B
143559	4043559	Plan - Crawl Space, Area C
143560	4043560	Plan - Basement Level, Area D

143561	4043561 R	Plan - Basement Level, Area E
143562	4043562	Plan - Basement Level, Area G
143563	4043563	Plan - Basement Level, Area H
143564	4043564	Plan - Level 1, Area A
143565	4043565	Plan - Level 1, Area B
143566	4043566	Plan - Level 1, Area C
143567	4043567	Plan - Level 1, Area D
143568	4043568 R	Plan - Level 1, Area E
143569	4043569 R	Plan - Level 1, Area F
143570	4043570	Plan - Level 1, Area G
143571	4043571	Plan - Level 1, Area H
143572	4043572	Plan - Canopies
143573	4043573 R	Terrace Plan - Level 1
143574	4043574	Plan - Level 2, Area A
143575	4043575	Plan - Level 2, Area B
143576	4043576	Plan - Level 2, Area C
143577	4043577	Plan - Level 2, Area D
143578	4043578	Plan - Level 2, Area G
143579	4043579 R	Plan - Level 2, Area H
143580	4043580	Plan - Level 3, Area G
143581	4043581 R	Plan - Level 3, Area H
143582	4043582	Plan - Level 4, Area G
143583	4043583	Plan - Level 4, Area H
143584	4043584	Atrium Plan and Details
143585	4043585	Atrium Details
143586	4043586	Miscellaneous Details
143587	4043587	Door Details
143588	4043588	Door Details
143589	4043589	Door Details
143590	4043590	Door Details
143591	4043591	Door Details
143592	4043592	Door Details
143593	4043593	Window Details and Types
143594	4043594	Window Details and Types
143595	4043595	Window and Door Details
143596	4043596	Roof Plan and Details Areas A and B
143597	4043597	Roof Plan and Details Areas C and D
143598	4043598	Roof Plan and Details Areas E and F
143599	4043599	Roof Plan and Details Areas G and H
143600	4043600	Roof Details
143601	4043601	Roof Plan Canopy and Details
143602	4043602	Exterior Elevations
143603	4043603	Exterior Elevations
143604	4043604	Exterior Elevations
143605	4043605	Exterior Elevations
143606	4043606	Exterior Elevations
143607	4043607	Exterior Elevations
143608	4043608	Exterior Window Elevations
143609	4043609	Exterior Window Elevations
143610	4043610	Exterior Window Elevations

143611	4043611	Wall Sections
143612	4043612	Wall Sections
143613	4043613	Wall Sections
143614	4043614	Wall Sections
143615	4043615	Wall Sections
143616	4043616	Details
143617	4043617	Details
143618	4043618	Details
143619	4043619	Details
143620	4043620	Details
143621	4043621	Details
143622	4043622	Details
143623	4043623	Canopy Sections
143624	4043624	Canopy Details
143625	4043625	Window Details
143626	4043626	Window Details
143627	4043627	Details
143628	4043628	Details
143629	4043629	Details
143630	4043630	Large Scale - Stairs, Elevators & Equipment Rooms
143631	4043631	Large Scale - Stairs & Equipment Rooms
143632	4043632	Large Scale - Stairs, Elevators & Equipment Rooms
143633	4043633 R	Large Scale Stairs & Equipment Rooms
143634	4043634	Large Scale - Stairs and Equipment Rooms
143635	4043635	Large Scale Stairs and Elevators
143636	4043636	Large Scale Stairs
143637	4043637	Large Scale Elevator Plans
143638	4043638	Large Scale Plan Stairs and Elevators
143639	4043639	Stair and Elevator Sections
143640	4043640	Large Scale Penthouse Plans and Details
143641	4043641	Large Scale Stairs & Equipment Rooms
143642	4043642	Large Scale Plan and Details
143643	4043643	Large Scale Plan and Interior Elevations and Details
143644	4043644	Large Scale Plans and Interior Elevations
143645	4043645	Large Scale Plan and Interior Elevations
143646	4043646	Interior Elevations
143647	4043647	Interior Elevations and Details
143648	4043648	Large Scale Plan and Interior Elevations
143649	4043649 R	Large Scale Plan and Interior Elevations
143650	4043650	Large Scale Plan and Interior Elevations
143651	4043651	Large Scale Plan and Interior Elevations
143652	4043652 R	Interior Elevations
143653	4043653	Large Scale Plans and Interior Elevations
143654	4043654	Large Scale Plans
143655	4043655	Large Scale Plans
143656	4043656 R	Large Scale Plan and Details
143657	4043657 R	Interior Elevations
143658	4043658 R	Interior Elevations and Details
143659	4043659	Interior Elevations
143660	4043660 R	Interior Elevations

143661	4043661 R	Large Scale Plans and Details
143662	4043662	Interior Elevations
143663	4043663 R	R.F. Shielding Plan and Details
143664	4043664	Toilet Plans and Elevations
143665	4043665	Toilet Plans and Elevations
143666	4043666	Toilet Plans and Elevations
143667	4043667	Toilet Plans and Elevations
143668	4043668	Toilet Plans and Elevations
143669	4043669	Atrium Elevations, Sections, and Details
143670	4043670	Interior Elevations and Details
143671	4043671	Interior Elevations and Details
143672	4043672	Interior Elevations and Details
143673	4043673	Miscellaneous Details
143674	4043674	Architectural Woodwork
143675	4043675	Architectural Woodwork
143676	4043676	Architectural Woodwork
143677	4043677	Architectural Woodwork
143678	4043678	Architectural Woodwork
143679	4043679	Architectural Woodwork
143680	4043680	Architectural Woodwork
143681	4043681	Architectural Woodwork
143682	4043682	Architectural Woodwork
143683	4043683	Architectural Woodwork
143684	4043684	Architectural Woodwork
143685	4043685	Architectural Woodwork
143686	4043686	Architectural Woodwork
143687	4043687	Architectural Woodwork
143688	4043688	Partition Details and Sections
143689	4043689	Partition Details
143690	4043690	Reinforced Partition Details
143691	4043691	Stud Wall Reinforcing Plans
143692	4043692	Stud Wall Reinforcing Plans
143693	4043693	Stud Wall Reinforcing Plans
143694	4043694	Stud Wall Reinforcing Plan
143695	4043695	Stud Wall Reinforcing Plan
143696	4043696	Interior Details
143697	4043697	Interior Details
143698	4043698 R	Interior Details
143699	4043699	Interior Details
143700	4043700 R	Interior Details
143701	4043701	Interior Details
143702	4043702 R	Interior Details
143703	4043703	Interior Details
143704	4043704	Interior Details
143705	4043705	Interior Details
143706	4043706	Interior Details
143707	4043707	Reflected Ceiling Plan Basement Level, Area D
143708	4043708	Reflected Ceiling Plan Basement Level, Area E
143709	4043709	Reflected Ceiling Plan Basement Level, Area G
143710	4043710	Reflected Ceiling Plan Basement Level, Area H

143711	4043711	Reflected Ceiling Plan Level 1, Area A
143712	4043712	Reflected Ceiling Plan Level 1, Area B
143713	4043713	Reflected Ceiling Plan Level 1, Area C
143714	4043714	Reflected Ceiling Plan Level 1, Area D
143715	4043715	Reflected Ceiling Plan Level 1, Area E
143716	4043716	Reflected Ceiling Plan Level 1, Area F
143717	4043717	Reflected Ceiling Plan Level 1, Area G
143718	4043718	Reflected Ceiling Plan Level 1, Area H
143719	4043719	Reflected Ceiling Plan Canopies
143720	4043720	Reflected Ceiling Plan Level 2, Area A
143721	4043721	Reflected Ceiling Plan Level 2, Area B
143722	4043722	Reflected Ceiling Plan Level 2, Area C
143723	4043723	Reflected Ceiling Plan Level 2, Area D
143724	4043724	Reflected Ceiling Plan Level 2, Area G
143725	4043725 R	Reflected Ceiling Plan Level 2, Area H
143726	4043726	Reflected Ceiling Plan Level 3, Area G
143727	4043727 R	Reflected Ceiling Plan Level 3, Area H
143728	4043728	Reflected Ceiling Plan Level 4, Area G
143729	4043729	Reflected Ceiling Plan Level 4, Area H
143730	4043730	Large Scale Reflected Ceiling Plans
143731	4043731	Large Scale Reflected Ceiling Plans
143732	4043732	Large Scale Reflected Ceiling Plans
143733	4043733	Large Scale Reflected Ceiling Plans
143734	4043734	Schedule, Elevations and Details
143735	4043735	Food Service Partial Floor Plan
143736	4043736	Food Service Mechanical Plan
143737	4043737	Food Service Electrical Plan
143738	4043738	Equipment Plan Basement Level, Area D
143739	4043739	Equipment Plan Basement Level, Area E
143740	4043740	Equipment Plan Basement Level, Area G
143741	4043741	Equipment Plan Basement Level, Area H
143742	4043742 R	Equipment Plan Level 1, Area A
143743	4043743 R	Equipment Plan Level 1, Area B
143744	4043744 R	Equipment Plan Level 1, Area C
143745	4043745	Equipment Plan Level 1, Area D
143746	4043746	Equipment Plan Level 1, Area E
143747	4043747 R	Equipment Plan Level 1, Area F
143748	4043748	Equipment Plan Level 1, Area G
143749	4043749	Equipment Plan Level 1, Area H
143750	4043750 R	Equipment Plan Level 2, Area A
143751	4043751 R	Equipment Plan Level 2, Area B
143752	4043752	Equipment Plan Level 2, Area C
143753	4043753 R	Equipment Plan Level 2, Area D
143754	4043754	Equipment Plan Level 2, Area G
143755	4043755 R	Equipment Plan Level 2, Area H
143756	4043756	Equipment Plan Level 3, Area G
143757	4043757 R	Equipment Plan Level 3, Area H
143758	4043758	Equipment Plan Level 4, Area G
143759	4043759	Equipment Plan Level 4, Area H
143760	4043760	Plan - Public Works Building

143761	4043761 R	Elevations
143762	4043762	Wall Sections and Details
143763	4043763	Wall Sections and Details
143764	4043764	Wall Sections and Details
143765	4043765 R	Toilet Plans and Elevations
143766	4043766	Reflected Ceiling and Details
143767	4043767	Sections & Details
143768	4043768	Interior Signage Details
143769	4043769	Interior Signage Type "GA"
143770	4043770	Interior Signage Types "GB" and "GC"
143771	4043771	Interior Signage Types "GD", "GE"
143772	4043772	Interior Signage Type "GF" and Details
143773	4043773	Interior Signage Type "GH"
143774	4043774	Interior Signage Type "GG" and Detail "GH"
143775	4043775	Room Building Finish Schedule
143776	4043776	Door Schedule
143777	4043777	Equipment Schedule
143778	4043778	General Notes
143779	4043779	Foundation Plan Area A
143780	4043780	Foundation Plan Area B
143781	4043781	Foundation Plan Area C
143782	4043782	Foundation and Slab Plan Basement Level - Area D
143783	4043783	Foundation and Slab Plan Basement Level - Area E
143784	4043784	Foundation and Slab Plan Level 1 - Area F
143785	4043785	Foundation and Slab Plan Area G
143786	4043786	Foundation and Slab Plan Area H
143787	4043787	Miscellaneous Foundation and Slab Plans
143788	4043788	Canopy Plans
143789	4043789	Framing Plan Level 1 - Area A
143790	4043790	Framing Plan Level 1 - Area B
143791	4043791	Framing Plan Level 1 - Area C
143792	4043792	Framing Plan Level 1 - Area D
143793	4043793	Framing Plan Level 1 - Area E
143794	4043794 R	Framing Plan Level 1 - Area G and H
143795	4043795	Framing Plan Level 2 - Area A
143796	4043796	Framing Plan Level 2 - Area B
143797	4043797	Framing Plan Level 2 - Area C
143798	4043798	Framing Plan Level 2 - Area D
143799	4043799	Framing Plan Level 2 - Area G
143800	4043800	Framing Plan Level 2 - Area H
143801	4043801	Framing Plan Level 3 - Area G
143802	4043802	Framing Plan Level 3 - Area H
143803	4043803	Framing Plan Level 4 - Area G
143804	4043804	Framing Plan Part. Roof, Level 4 - Area H
143805	4043805	Framing Plan Roof Level - Area A
143806	4043806	Framing Plan Roof Level - Area B
143807	4043807	Framing Plan Roof Level - Area C
143808	4043808	Framing Plan Roof Level - Area D
143809	4043809	Framing Plan Roof Level - Area E
143810	4043810	Framing Plan Roof Level - Area F

143811	4043811	Framing Plan Roof Level - Area G
143812	4043812	Framing Plan Roof Level - Area H
143813	4043813	Elevator and Stairwell Penthouses
143814	4043814	Plans at Mechanical Nodes
143815	4043815	Plans at Mechanical Nodes
143816	4043816	Pile Cap Details
143817	4043817	Elevator Pits Plans
143818	4043818	Elevator Pits Details
143819	4043819	Typical Details
143820	4043820 R	Foundation Details
143821	4043821	Foundation Details
143822	4043822 R	Foundation Details
143823	4043823	Foundation Details
143824	4043824	Overall Column Location Plan
143825	4043825	Column Schedule and Details
143826	4043826	Beam Schedule and Details
143827	4043827	Slab Details and Schedules
143828	4043828 R	Penthouse-Sections
143829	4043829 R	Beam and Slab Sections
143830	4043830	Beam and Slab Sections
143831	4043831	Beam and Slab Sections
143832	4043832	Typical Slab Details
143833	4043833	Details and Sections
143834	4043834 R	Miscellaneous Plans Sections and Details
143835	4043835 R	Equipment Foundations and Pump House
143836	4043836	Solar Panel Framing Plan and Details
143837	4043837	Public Works Building Foundation & Roof Framing Plan
143838	4043838	Public Works Building - Structural Elevations
143839	4043839	Public Works Building - Sections & Details
143840	4043840	HVAC Piping Crawl Space Area A
143841	4043841	HVAC Piping Crawl Space Area B
143842	4043842	Piping Plan Crawl Space Area C
143843	4043843	Piping Plan Basement Level, Area D
143844	4043844	Piping Plan Basement Level - Area E
143845	4043845	Piping Plan Basement Level - Area G
143846	4043846	Piping Plan Basement Level, Area H
143847	4043847	Boiler Room Partial Plan - Area E
143848	4043848	Partial Plan Basement Level - Area E
143849	4043849	Partial Plan Basement Level - Area E
143850	4043850	Duct and Piping Plan Basement Level - Area D
143851	4043851	Ductwork Plan Basement Level - Area E
143852	4043852	Ductwork Plan Basement Level - Area G
143853	4043853	Ductwork Plan Basement Level - Area H
143854	4043854	Piping Plan Level 1 - Area A
143855	4043855	Piping Plan Level 1, Area B
143856	4043856 R	Piping Plan Level 1, Area C
143857	4043857	Piping Plan Level 1, Area D
143858	4043858	Piping Plan Level 1 - Area E
143859	4043859	Piping Plan Level 1, Area F
143860	4043860	Piping Plan Level 1 - Area G

143861	4043861	Piping Plan Level 1, Area H
143862	4043862	Ductwork Plan Level 1 - Area A
143863	4043863	Ductwork Plan and Sections Level 1 - Area B
143864	4043864	Ductwork Plan Level 1 - Area C
143865	4043865	Ductwork Plan and Sections Level 1 - Area D
143866	4043866	Ductwork Plan Level 1 - Area E
143867	4043867	Ductwork Plan Level 1 - Area F
143868	4043868	Ductwork Plan - Level 1 Area G
143869	4043869	Ductwork Plan Level 1, Area H
143870	4043870	Piping Plan Level 2, Area A
143871	4043871	Piping Plan Level 2, Area B
143872	4043872	Piping Plan Level 2, Area C
143873	4043873	Piping Plan Level 2 - Area D
143874	4043874 R	Piping Plan Level 2 - Area G
143875	4043875 R	Piping Plan Level 2, Area H
143876	4043876	Ductwork Plan Level 2 - Area A
143877	4043877	Ductwork Plan Level 2 - Area B
143878	4043878	Ductwork Part. Plan Level 2 - Area C
143879	4043879	Ductwork Part. Plan Level 2 - Area C
143880	4043880	Ductwork Part. Plan Level 2 - Area C
143881	4043881	Ductwork Part. Plan Level 2 - Area C
143882	4043882	Ductwork Part. Plan Level 2 - Area D
143883	4043883	Ductwork Part. Plan Level 2 - Area D
143884	4043884	Ductwork Part. Plan Level 2 - Area D
143885	4043885	Ductwork Part. Plan Level 2 - Area D
143886	4043886	Ductwork Plan Level 2 - Area G
143887	4043887	Ductwork Part. Plan Level 2 - Area H
143888	4043888	Ductwork Part. Plan Level 2 - Area H
143889	4043889 R	Piping Plan Level 3, Area G
143890	4043890 R	Piping Plan Level 3, Area H
143891	4043891	Ductwork Plan Level 3 - Area G
143892	4043892	Ductwork Part. Plan Level 3, Area H
143893	4043893	Ductwork Part. Plan Level 3 - Area H
143894	4043894 R	Piping Plan Level 4 - Area G
143895	4043895 R	Piping Plan Level 4, Area H
143896	4043896	Ductwork Plan Level 4 - Area G
143897	4043897	Ductwork Plan Level 4 - Area H
143898	4043898	Outside Piping Partial Plan
143899	4043899	Outside Piping Partial Plan
143900	4043900	Sections and Details
143901	4043901	Sections and Details
143902	4043902	Sections and Details
143903	4043903	Boiler System Schematic
143904	4043904	Fuel Oil System Schematic
143905	4043905	Solar System Schematic
143906	4043906	Potable Water Hot Flow Schematic
143907	4043907	Specialty List
143908	4043908	Sections and Details
143909	4043909	Mechanical Equip. Room Plan Level 1 - Area A and B
143910	4043910	Mechanical Equip. Room Plan Level 2 - Area A and B

143911	4043911	Mechanical Equip. Room Plan Level 1 - Area C
143912	4043912	Mechanical Equip. Room Plans Level 1 - Areas D and G
143913	4043913	Mech. Equip. Room Plan Bas't Level Area D - H Level 1 Area E
143914	4043914	Mechanical Equipment Rm. Plan Level 1, Area H
143915	4043915	Mech. Equip. Rm. Plan and Sections Level 3 Area G
143916	4043916	Mech. Equip. Rm. Plan and Sect. Level 4 - Area G
143917	4043917	Sections
143918	4043918	Sections
143919	4043919	Sections
143920	4043920	Sections
143921	4043921	Sections
143922	4043922	Sections
143923	4043923	Sections
143924	4043924	Sections
143925	4043925	Sections
143926	4043926	Freezers and Refrigerators Plans, Sections, and Elevs.
143927	4043927	Schedules
143928	4043928	Schedules
143929	4043929	Schedules
143930	4043930	Schedules
143931	4043931	Schedules
143932	4043932	Schedules
143933	4043933	Schedules
143934	4043934	Schedules
143935	4043935	Schedules
143936	4043936	Schedules
143937	4043937	Schedules
143938	4043938	Schedules
143939	4043939	Legend, Symbols, and General Notes
143940	4043940	Details
143941	4043941	Details
143942	4043942	Details
143943	4043943	Chilled and Condenser Water Flow Diagram
143944	4043944	Hot Water Flow Diagram Areas A Thru F
143945	4043945	Hot Water Flow Diagram Areas G and H
143946	4043946	Chilled Water Distribution Flow Diagram
143947	4043947	Hot Water Flow Diagram
143948	4043948	Air Flow Diagram and Sequence of Operation
143949	4043949	Air Flow Diagram and Sequence of Operation
143950	4043950	Air Flow Diagram and Sequence of Operation
143951	4043951	Air Flow Diagram and Sequence of Operation
143952	4043952	Flow Diagram and Sequence of Operation
143953	4043953	Flow Diagram and Sequence of Operation
143954	4043954	Air Flow Diagram and Sequence of Operation
143955	4043955	Air Flow Diagram and Sequence of Operation
143956	4043956	Smoke Removal Schedule
143957	4043957	Smoke Removal Schedule
143958	4043958	Smoke Removal Schedule

143959	4043959	Smoke Removal Schedule
143960	4043960	Smoke Removal Schedule
143961	4043961	Smoke Removal Schedule
143962	4043962	Fuel Oil Pump House and Dispatch Rm.
143963	4043963	Solar Collector Piping Roof Plan - Area D
143964	4043964	Roof Plan Area A and B
143965	4043965	Roof Plan Area C and D
143966	4043966	Roof Plan Area E and F
143967	4043967	Roof Plan Area G and H
143968	4043968	Basement Subdrain System
143969	4043969	Mechanical HVAC Floor Plan and Diagrams
143970	4043970	Mechanical HVAC Schedules and Diagrams
143971	4043971	Plumbing Plan Basement Level, Area D
143972	4043972	Plumbing Plan Basement Level, Area E
143973	4043973	Plumbing Plan Basement Level - Area G
143974	4043974	Plumbing Plan Basement Level Area H
143975	4043975	Plumbing Plan Level 1, Area A
143976	4043976	Plumbing Plan Level 1, Area B
143977	4043977	Plumbing Plan Level 1, Area C
143978	4043978	Plumbing Plan Level 1, Area D
143979	4043979	Plumbing Plan Level 1, Area E
143980	4043980	Plumbing Plan Level 1, Area F
143981	4043981	Plumbing Plan Level 1, Area G
143982	4043982	Plumbing Plan Level 1, Area H
143983	4043983	Plumbing Plan Level 2, Area A
143984	4043984	Plumbing Plan Level 2, Area B
143985	4043985	Plumbing Plan Level 2, Area C
143986	4043986	Plumbing Plan Level 2, Area D
143987	4043987	Plumbing Plan Level 2, Area G
143988	4043988	Plumbing Plan Level 2, Area H
143989	4043989	Plumbing Plan Level 3, Area G
143990	4043990	Plumbing Plan Level 3, Area H
143991	4043991	Plumbing Plan Level 4, Area G
143992	4043992	Plumbing Plan Level 4, Area H
143993	4043993	Legend, Symbols, Schedules, and General Notes
143994	4043994	Plumbing Details
143995	4043995	Plumbing Floor Plan and Details
143996	4043996	Communication Systems Legend
143997	4043997	Communications - Floor Plan Basement Level - Area D
143998	4043998	Communications - Floor Plan Basement Level - Area E
143999	4043999	Communications - Floor Plan Basement Level - Area G
144000	4044000	Communications - Floor Plan Basement Level - Area H
144001	4044001	Communications - Floor Plan Level 1 - Area A
144002	4044002	Communications - Floor Plan Level 1 - Area B
144003	4044003	Communications - Floor Plan Level 1 - Area C
144004	4044004	Communications - Floor Plan Level 1 - Area D
144005	4044005	Communications - Floor Plan Level 1 - Area E
144006	4044006	Communications - Floor Plan Level 1 - Area F
144007	4044007	Communications - Floor Plan Level 1 - Area G
144008	4044008	Communications - Floor Plan Level 1 - Area H

144009	4044009	Communications - Floor Plan Level 2 - Area A
144010	4044010	Communications - Floor Plan Level 2 - Area B
144011	4044011	Communications - Floor Plan Level 2 - Area C
144012	4044012	Communications - Floor Plan Level 2 - Area D
144013	4044013	Communications - Nurse Call System
144014	4044014	Communications - Floor Plan Level 2 - Area G
144015	4044015	Communications - Nurse Call System
144016	4044016 R	Communications - Floor Plan Level 2 - Area H
144017	4044017 R	Communications - Nurse Call System
144018	4044018	Communications - Floor Plan Level 3 - Area G
144019	4044019	Communications - Nurse Call System
144020	4044020 R	Communications - Floor Plan Level 3 - Area H
144021	4044021 R	Communications - Nurse Call System
144022	4044022	Communications - Floor Plan Level 4 - Area G
144023	4044023	Communications - Nurse Call System
144024	4044024	Communications - Floor Plan Level 4 - Area H
144025	4044025	Communications - Nurse Call System
144026	4044026	Telephone Satellite Closet Conduit Riser Diagram
144027	4044027	Fire Alarm System Riser Diagram I
144028	4044028	Fire Alarm System Riser Diagram II
144029	4044029	Fire Alarm System Riser Diagram III
144030	4044030 R	Broadband Network & Security System Block Diagrams
144031	4044031 R	Communication: Misc. Details
144032	4044032 R	Security Camera Locations
144033	4044033	Communication Center Console Concept Layout
144034	4044034	Distribution System and Switchyard, Single Line Diagrams
144035	4044035	Primary Distribution System Plan
144036	4044036	Primary Distribution System Plan
144037	4044037	Primary Distribution and Heliport Plan
144038	4044038	Primary Distribution Details and Diagrams
144039	4044039	Primary Distribution Details
144040	4044040	Primary Distribution Details
144041	4044041	Primary Distribution Details
144042	4044042	Primary Distribution Details
144043	4044043	Primary Distribution Details
144044	4044044	Primary Distribution Details
144045	4044045	Primary Distribution Materials List
144046	4044046	Legend and General Notes
144047	4044047	Lighting Fixture Schedule
144048	4044048	Single Line Diagram
144049	4044049	Single Line Diagram
144050	4044050	Single Line Diagram
144051	4044051	Single Line Diagram
144052	4044052	Single Line Diagram
144053	4044053	Single Line Diagram
144054	4044054	Power Plan Basement Level - Area A
144055	4044055	Power Plan Basement Level - Area B
144056	4044056	Power Plan Basement Level - Area C
144057	4044057	Power Plan Basement Level - Area D
144058	4044058	Power Plan Basement Level - Area E

144059	4044059	Power Plan Basement Level - Area G
144060	4044060	Power Plan Basement Level - Area H
144061	4044061	Lighting Plan Basement Level - Area A
144062	4044062	Lighting Plan Basement Level - Area B
144063	4044063	Lighting Plan Basement Level - Area C
144064	4044064	Lighting Plan Basement Level - Area D
144065	4044065	Lighting Plan Basement Level - Area E
144066	4044066	Lighting Plan Basement Level - Area G
144067	4044067	Lighting Plan Basement Level - Area H
144068	4044068	Entrance Canopy Lighting Levels 1 and 2
144069	4044069	Power Plan Level 1 - Area A
144070	4044070	Power Plan Level 1 - Area B
144071	4044071	Power Plan Level 1 - Area C
144072	4044072	Power Plan Level 1 - Area D
144073	4044073	Power Plan Level 1 - Area E
144074	4044074	Power Plan Level 1 - Area F
144075	4044075	Power Plan Level 1 - Area G
144076	4044076	Power Plan Level 1 - Area H
144077	4044077	Lighting Plan Level 1 - Area A
144078	4044078	Lighting Plan Level 1 - Area B
144079	4044079	Lighting Plan Level 1 - Area C
144080	4044080	Lighting Plan Level 1 - Area D
144081	4044081	Lighting Plan Level 1 - Area E
144082	4044082	Lighting Plan Level 1 - Area F
144083	4044083	Lighting Plan Level 1 - Area G
144084	4044084	Lighting Plan Level 1 - Area H
144085	4044085	Power Plan Level 2 - Area A
144086	4044086	Power Plan Level 2 - Area B
144087	4044087	Power Plan Level 2 - Area C
144088	4044088	Power Plan Level 2 - Area D
144089	4044089	Power Plan Level 2 - Area G
144090	4044090	Power Plan Level 2 - Area H
144091	4044091	Lighting Plan Level 2 - Area A
144092	4044092	Lighting Plan Level 2 - Area B
144093	4044093	Lighting Plan Level 2 - Area C
144094	4044094	Lighting Plan Level 2 - Area D
144095	4044095	Lighting Plan Level 2 - Area G
144096	4044096	Lighting Plan Level 2 - Area H
144097	4044097	Power Plan Level 3 - Area G
144098	4044098	Power Plan Level 3 - Area H
144099	4044099	Lighting Plan Level 3 - Area G
144100	4044100	Lighting Plan Level 3 - Area H
144101	4044101	Power Plan Level 4 - Area G
144102	4044102	Power Plan Level 4 - Area H
144103	4044103	Lighting Plan Level 4 - Area G
144104	4044104	Lighting Plan Level 4 - Area H
144105	4044105	Power/Communications & Ltg. Plans
144106	4044106	Elect. Equip. and Wiring Schedule
144107	4044107	Elect. Equip. and Wiring Schedule
144108	4044108	Lightning Protection

144109	4044109	Equipment Room Plan Basement Level - Area E
144110	4044110	Equipment Room Plan Basement Level - Area E
144111	4044111	Equipment Room Plans Areas A and B
144112	4044112	Equipment Room Plans Areas C and D
144113	4044113	Equipment Room Plans Area G
144114	4044114	Mechanical Equip. Room Plans Level 1 - Areas A and B
144115	4044115	Mechanical Equip. Room Plans Level 2 - Areas A and B
144116	4044116	Mechanical Equip. Room Plans Level 1 - Area C
144117	4044117	Mechanical Equip. Room Plans Level 2 - Area C
144118	4044118	Mechanical Equip. Room Plans Level 1 - Areas D and G
144119	4044119	Mechanical Equip. Room Plans Level 3 - Area G
144120	4044120	Mechanical Equip. Room Plan Level 1 - Area H
144121	4044121	Mechanical Equip. Room Plan Level 4 - Area G
144122	4044122	Outside Utility Power Plan
144123	4044123	X-Ray Plan Level 2 - Area C
144124	4044124	X-Ray Details and Diagrams
144125	4044125	Cysto Details and Diagrams
144126	4044126	Mechanical Equip. Room Plan Level 2 - Area D
144127	4044127	Mechanical Equip. Room Plans Bsm't - Areas H & D, Level 1 - E
144128	4044128	Mechanical Equipment Rm. Plans Areas G and H
144129	4044129	Lightning Protection Plan and Details
144130	4044130	Lightning Protection Plan and Details
144131	4044131	Lightning Protection Plan and Details
144132	4044132	Electrical Equipment and Wiring Schedule
144133	4044133	Electrical Equipment and Wiring Schedule
144134	4044134	Electrical Equipment and Wiring Schedule
144135	4044135	Electrical Equipment and Wiring Schedule
144136	4044136	Electrical Equipment and Wiring Schedule
144137	4044137	Electrical Equipment and Wiring Schedule
144138	4044138	Electrical Equipment and Wiring Schedule
144139	4044139	Electrical Equipment and Wiring Schedule
144140	4044140	Electrical Equipment and Wiring Schedule
144141	4044141	Electrical Equipment and Wiring Schedule
144142	4044142	Electrical Equipment and Wiring Schedule
144143	4044143	Electrical Equipment and Wiring Schedule
144144	4044144	Electrical Equipment and Wiring Schedule
144145	4044145	Electrical Equipment and Wiring Schedule
144146	4044146	Electrical Equipment and Wiring Schedule
144147	4044147	Electrical Equipment and Wiring Schedule
144148	4044148	Electrical Equipment and Wiring Schedule
144149	4044149	Electrical Equipment and Wiring Schedule
144150	4044150	Electrical Equipment and Wiring Schedule
144151	4044151	Electrical Equipment and Wiring Schedule
144152	4044152	Electrical Equipment and Wiring Schedule
144153	4044153	Electrical Equipment and Wiring Schedule
144154	4044154	Electrical Equipment and Wiring Schedule
144155	4044155	Electrical Equipment and Wiring Schedule
144156	4044156	Electrical Equipment and Wiring Schedule
144157	4044157	Electrical Equipment and Wiring Schedule

144158	4044158	Electrical Equipment and Wiring Schedule
144159	4044159	Electrical Equipment and Wiring Schedule
144160	4044160	Electrical Equipment and Wiring Schedule
144161	4044161	Electrical Equipment and Wiring Schedule
144162	4044162	Electrical Equipment and Wiring Schedule
144163	4044163	Electrical Equipment and Wiring Schedule
144164	4044164	Electrical Equipment and Wiring Schedule
144165	4044165	Electrical Equipment and Wiring Schedule
144166	4044166	Electrical Equipment and Wiring Schedule
144167	4044167	Electrical Equipment and Wiring Schedule
144168	4044168	Electrical Equipment and Wiring Schedule
144169	4044169	Electrical Equipment and Wiring Schedule
144170	4044170	Electrical Equipment and Wiring Schedule
144171	4044171	Electrical Equipment and Wiring Schedule
144172	4044172	Electrical Equipment and Wiring Schedule
144173	4044173	Electrical Equipment and Wiring Schedule
144174	4044174	Electrical Equipment and Wiring Schedule
144175	4044175	Electrical Equipment and Wiring Schedule
144176	4044176	Electrical Equipment and Wiring Schedule
144177	4044177	Electrical Equipment and Wiring Schedule
144178	4044178	Electrical Equipment and Wiring Schedule
144179	4044179	Electrical Equipment and Wiring Schedule
144180	4044180	Electrical Equipment and Wiring Schedule
144181	4044181	Electrical Equipment and Wiring Schedule
144182	4044182	Lighting and Receptacle Panelboard Schedule
144183	4044183	Lighting and Receptacle Panelboard Schedule
144184	4044184	Lighting and Receptacle Panelboard Schedule

Sketch SK-M-22-79

7. FACTORY INSPECTION: (See Clause 10 of the General Provisions). Factory inspection of material and equipment for which tests at the place of manufacture are required in referenced specifications will be waived if copies of factory reports are furnished that show compliance with the specification requirements. Factory inspection will be required only where specified herein or in the technical sections of this specification. Factory inspection will not be required for lumber if it is grade-marked and trade-marked by the association under whose rules it is graded, or if it is accompanied by certificates of inspection issued by the association under whose rules it it graded or by another inspection agency that is satisfactory to the Contracting Officer. The Government reserves the right to charge to the Contractor any additional cost of Government inspection and tests when materials and equipment are not ready at the time inspection and tests are requested by the Contractor.

8. SAMPLES: As soon as practicable, and before installation, submit samples of materials and equipment to the Architect/Engineer; Lockwood Greene Engineers, Inc., P. O. Box 491, Spartanburg, South Carolina 29304. Submit all samples required in the technical sections of this specification.

9. SUBMITTAL OF SHOP DRAWINGS, MANUFACTURERS DATA AND CERTIFICATIONS REQUIRED OF THE CONTRACTOR: As soon as practicable after award of the contract, and before procurement or fabrication, submit, except as specified

SHOP DRAWING SUBMITTALS: Wherever the quantity of shop drawing submittals are set forth in the specifications, change such quantity to "7".

"12x. AVAILABILITY OF UTILITY SERVICES: No utilities are available at the project site; however, Clause 56, "Availability and Use of Utility Services" of the General Provisions applies, as modified herein. Reasonable amounts of utilities will be made available to the Contractor at the prevailing Government rates, which may be obtained upon application to the Commanding Officer. The Contractor shall be responsible for providing all temporary utility lines to the project site, making connections, providing transformers, meters, and making disconnections.

12.1 Water obtained from the Marine Corps Base, Camp LeJeune water system will be limited to no more than 50,000 gallons in any 24 hour period. The Contractor may at his option obtain water during construction by providing temporary wells and water treatment on-site. Any system so installed must be removed by the Contractor upon completion of the contract. Water obtained by a Contractor-provided system will require water analysis and treatment as recommended by a qualified testing laboratory for intended usage.

12.1.1 Temporary Water Service: If the Contractor hooks up to the Camp Lejeune water system, the tie-in shall be by means of a pressure tap to the existing water line on Brewster Blvd. The Contractor's temporary water line system shall include a double check valve backflow preventer, a water meter, and a gate valve between the water meter and the existing water line, all to be sized in accordance with the size of pipeline used by the Contractor.

12.2 Temporary electrical service hook up shall be on the north side of Brewster Blvd. at the intersection with Stone Street.

12.3 Temporary Sanitary Service: There will be no temporary sanitary sewer hook up allowed for use by the Contractor. Portable chemical toilets shall be provided by the Contractor.

12.4 Telephone Service shall be the responsibility of the Contractor. Commercial telephone lines are available on Brewster Blvd."

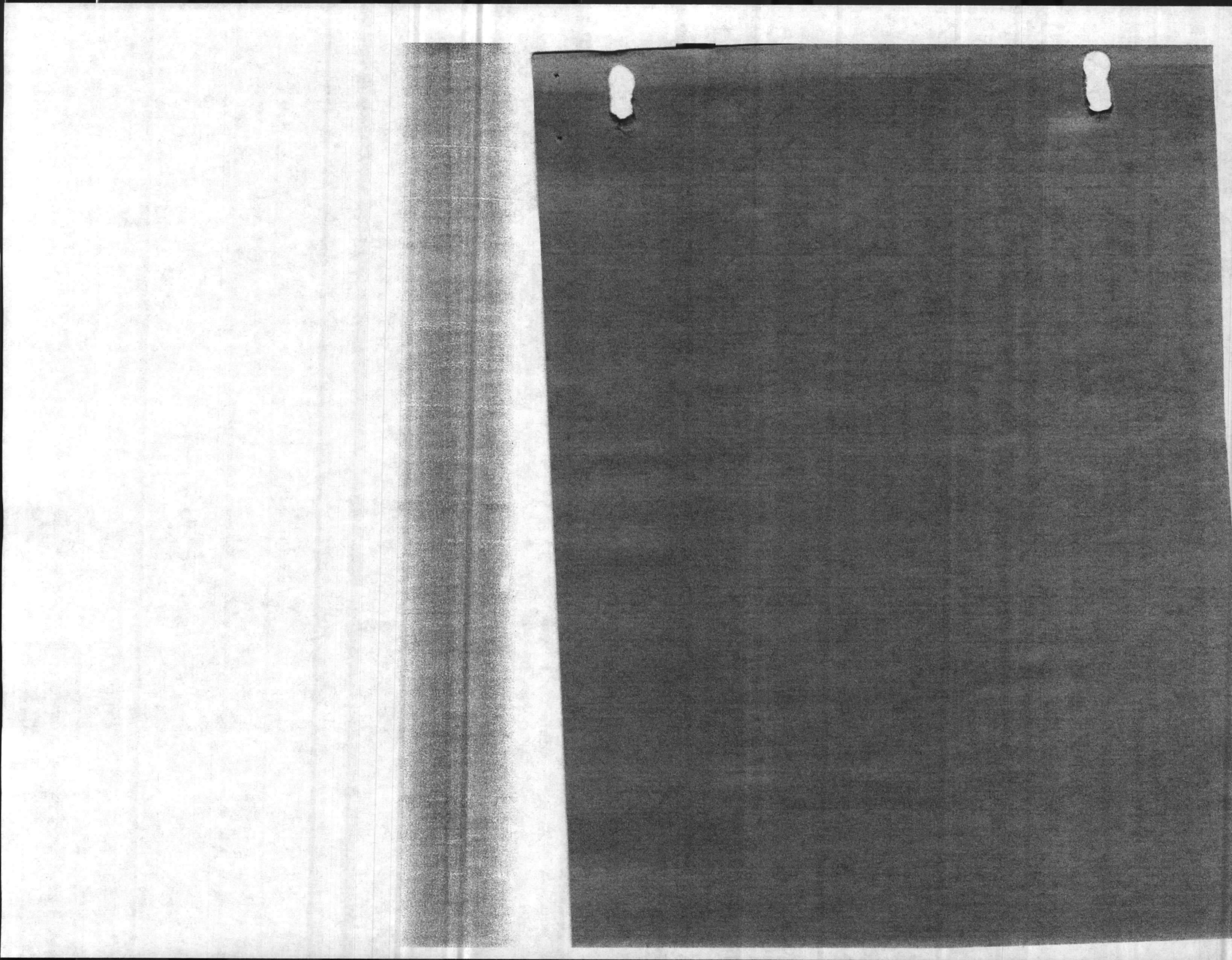

otherwise, to the Architect/Engineer; Lockwood Greene Engineers, Inc., P. O. Box 491, Spartanburg, South Carolina 29304, all the shop drawings, manufacturer's data and certifications required in the technical sections of this specification. Four copies of contractor approved submittals and seven copies of all submittals to be approved by the Contracting Officer shall be forwarded. The Architect/Engineer for this project will review and approve for the Contracting Officer if the submittal complies with the contract requirements. One copy of transmittal form for all submittals shall be forwarded to the Resident Officer in Charge of Construction. Submittals for sprinkler system shall be submitted to the Commander, Atlantic Division (Code 05), Naval Facilities Engineering Command, Naval Station, Norfolk, Virginia 23511. Specification MIL-D-1000 shall be used as a guide and its use is encouraged, for all drawings and data submitted by the Contractor. Conformance to the provisions of specification MIL-D-1000 is not mandatory for maps, sketches, presentation drawings, perspectives, renderings, and all other drawings not requiring Naval Facilities Engineering Command drawings numbers.

10. MINIMUM WAGE RATES AND OTHER LABOR STANDARDS: The Contractor shall pay mechanics and laborers employed or working directly upon the site of the work wage rates not less than those contained in the attached wage determination decision of the Secretary of Labor No. NC76-1019, including Modification Nos. 1, 2 and 3 (Building Construction Schedule); NC78-1061, including Modification No. 1 (Highway Construction Schedule), and NC75-1078 (Water and Sewer Construction Schedule; and Heavy Construction Schedule). Building Construction Schedule shall apply for all work except that the Highway Construction Schedule shall apply for all paving, roadways, parking lots, parking lot lighting, exterior storm drainage systems, helo landing pad, grading, topsoil and seeding, concrete curbs, gutters and sidewalks, landscaping, site improvements and except that the Water and Sewer Construction Schedule; and Heavy Construction Schedule shall apply for all exterior utility systems (not including parking lot lighting and storm drainage).

11. SAFETY PROGRAM: The Contractor shall implement a safety program conforming to the requirements of Federal, State and Local laws, rules and regulations. The program shall include, but is not limited to, the following:

a. "Occupational Safety and Health Standards", which can be ordered from the Superintendent of Documents, U. S. Government Printing Office, Washington, D. C. 20402.

b. Department of the Army, Corps of Engineers, "General Safety Requirements", which may be examined in the office where bids are being received or may be purchased from the Superintendent of Documents, U. S. Government Printing Office, Washington, D. C. 20402.

c. General Provisions, Clause 45.

12. AVAILABILITY OF UTILITY SERVICES: Clause 56, "Availability and Use of Utility Services" of the General Provisions does not apply. No utilities are available at the Project site. Contractor shall provide all utilities, temporary and permanent, required for work under this Contract and shall include cost of such utilities in Base Bid Price. The Contractor shall pay cost of all utilities consumed, including hook-up fees. Contractor shall give notice to and obtain permits from all utility suppliers affected. At completion of Project, remove all temporary utilities.

"Storage and staging areas shall be located within the clearing limits and outside the area to be occupied by the building and shall be kept in a neat and safe condition. Trees and other vegetation which are to remain shall be protected from damage."

13. TRAILER OR STORAGE BUILDINGS will be permitted on the job site, where space is available, subject to the approval of the Contracting Officer. The trailers or buildings shall be suitably painted and kept in a good state of repair. Failure of the Contractor to maintain his trailers or storage buildings in good condition will be considered sufficient reason to require their removal from the job site.

14. WRITTEN GUARANTEES AND GUARANTOR'S LOCAL REPRESENTATIVE: Prior to completion of the contract, the Contractor shall obtain and furnish to the Contracting Officer's designated representative written guarantees for all the equipment and/or appliances furnished under the contract. The Contractor shall furnish with each guarantee: The name, address, and telephone number of the guarantor's representative nearest to the location where the equipment and/or appliances are installed, who, upon request of the Using Service's representative, will honor the guarantee during the guaranty period and will provide the services prescribed by the terms of the guarantee. At the time of installation, the Contractor shall tag each item of warranted equipment with a durable oil and water resistant tag approved by the Contracting Officer. Tag shall be attached with copper wire and sprayed with a clear silicone waterproof coating. Leave the date of acceptance and inspector's signature blank until project is accepted for beneficial occupancy. Tag shall show the following information:

EQUIPMENT WARRANTY TAG

Type of Equipment.....
Accepted Date.....
Warranted Until.....
Under Contract N62470-.....
Inspector's Signature.....

STATION PERSONNEL TO PERFORM ONLY OPERATIONAL MAINTENANCE

15. TECHNICAL PUBLICATIONS: The Contractor shall furnish to the Contracting Officer three copies each of installation, operation maintenance manuals and parts list for all Contractor-furnished mechanical and electrical equipment.

15.1 Operating instructions for the principal plant mechanical and electrical components, for use by operating personnel, shall be provided. They shall be laminated between thermoplastic sheets and affixed where directed. The instructions shall describe the function of the equipment, its most economical operation, start-up and shut-down procedures, procedures to follow in the event of failure, normal maintenance practices, and caution and warning notices.

15.2 Maintenance and operation manual shall be furnished to the Contracting Officer for approval. The manual shall be mounted in flexible binders with oil-resistant covers and shall contain, but not be limited to,

installation and operating instructions, maintenance procedures, illustrations, drawings, detailed descriptions, tests, adjustment, safety precautions, and parts list.

15.3 Parts list, giving part numbers and prices for the equipment furnished, shall be submitted to the Contracting Officer as soon as practicable after the award of the contract, but not later than 30 days after shop drawings for the equipment have been approved.

16. IDENTIFICATION: All catalog cuts, shop drawings, samples and other data submitted for approval shall specifically identify the specification paragraph or contract drawing by number where each item submitted is required to be provided. All submittals shall be clearly marked in ink to indicate the specific items submitted for approval.

17. SCHEDULING THE WORK: ~~Immediately after award, the Contractor shall meet with the Contracting Officer and prepare a schedule of work.~~ If Public Works Building is provided, it shall be completed during the first 540 calendar days of this Contract. Outages of utilities which ~~affect wide areas of the Marine Corps Base or~~ last 4 hours or longer shall be done on a holiday or at night and shall require 30 days advance written approval from the Marine Corps Base. Other outages shall require a ten day prior written approval from the Contracting Officer. All utility cutovers shall require a ten day prior written approval from the Contracting Officer and shall be made after normal working hours or on weekends. Anticipated utility outages and utility cutover costs shall be included in the bid. The normal working hours are from 8:00 a.m. to 4:30 p.m. Monday through Friday.

~~"It shall be the Contractor's responsibility to adequately and completely drain construction sites as required to keep subgrades and subsoils sufficiently dry to permit all construction operations to progress. This drainage will be required to be established prior to proceeding with construction."~~

19. CONTRACTOR'S INVOICE AND CONTRACT PERFORMANCE STATEMENT: Requests for payment in accordance with the terms of the contract shall consist of:

(a) Contractor's Invoice on form NAVFAC 10-7300/30 (4/68), which shall show, in summary form, the basis for arriving at the amount of the invoice, and

(b) Contract Performance Statement on form NAVFAC 10-7300/31 required by Clause 86 (b) of the General Provisions is deleted.

(c) Contractor's Monthly Estimate for Voucher.

(d) Affidavit to accompany invoice (5ND LANTDIV form 4-4235/4 (Rev 1/68).

(e) Mathematical network analysis.

17. SCHEDULING THE WORK: Delete the first sentence and substitute the following: "Notwithstanding the requirements of Clause 62 of the General Provisions, immediately after award, the Contractor shall meet with the Contracting Officer and present a schedule of work, prepared in accordance with Clause 62, for review by the Contracting Officer. The schedule will be reviewed at this meeting and will be retained by the Contracting Officer for final review and approval."

Forms will be furnished by the Contracting Officer. The Contractor has the option to use the government furnished progress schedule and record form. Monthly invoices and supporting forms for work performed through the 20th of the month shall be submitted to the Contracting Officer by the 25th of the month in the following quantities:

(a) Contractor's Invoice (NAVFAC 10-7300/30) - Original and five copies.

(b) Contractor's Monthly Estimate for Voucher (5ND GRN 5265/1 Original and two copies shall be required on all jobs where there is a schedule of prices.

(c) Affidavit (LANTDIV 4-4235/4) - Original

(d) Network Mathematical Analysis - 3 copies.

20. CONSTRUCTION CATEGORIES: The construction categories given below may be amended by the Contracting Officer, as necessary, during the course of the work. The following construction categories shall apply to all work covered by this specification:

PROGRAM	CATEGORY Prim.	Secondary	DESCRIPTION
P600	510	510.10	Hospital Replacement

21. GOVERNMENT-FURNISHED EQUIPMENT: The Government will furnish Category "B" and "E2" medical equipment, as set forth in section entitled "General Requirements for Medical Equipment", for installation by the Contractor. The Government-furnished equipment will be stored within 6 miles of the job site. The Contractor shall load, transport, unload, uncrate, assemble, install, connect and test all Government-furnished Contractor-installed equipment. The new Government-furnished equipment shall be uncrated by the Contractor in the presence of the Contracting Officer and the Contractor Quality Control Representative (CQCR) to determine any damage due to shipping or any missing parts. Government-furnished Contractor-installed equipment will be available 15 months after contract award. Contractor shall include dates for equipment installation in Contractor-proposed Network Analysis System as specified hereinafter.

22. NORTH CAROLINA STATE AND LOCAL SALES AND USE TAX is required. See also section entitled "Additional General Paragraphs".

23. PROJECT IDENTIFICATION SIGNBOARD: A project identification signboard shall be provided. See also section entitled "Additional General Paragraphs".

24. INSPECTOR'S OFFICE: ~~The Contractor shall provide not less than 800 square feet~~ "Within 30 calendar days after award, the Contractor shall provide not less than 800 square feet of usable office space for use by Government personnel."

The space shall be within a weathertight building, have adequate heating and toilet facilities, light, air conditioning and ventilation. All utilities shall be furnished by the Contractor. The office shall be provided at a location selected by the Contracting Officer. After completion of the work, the Contractor shall remove the building from the site, and landscape and seed area. The office shall contain the following items and equipment:

5	Office desks
2	Typist office desks
4	Four-drawer file cabinets (legal size)
2	Plan tables, 4 feet by 8 feet, suitable for examination of drawings
2	Plan racks for full size drawings
5	Three-shelf bookcases
1	Dictaphone system for inspectors
1	Copy machine (Xerox)
1	Water fountain

25. AS-BUILT RECORD OF MATERIALS USED IN BUILDINGS: Prior to completion of the contract, the Contractor shall furnish to the Contracting Officer an "as-built" record of materials used in the construction. Submittal of this data is made a condition for final payment under the contract. Where several manufacturer's brands, types or classes of the items listed have been used in the project, the specific areas where each item was used shall be designated. Designations shall be keyed to the area and space designations on the contract drawings. Information shall be furnished, typewritten, for the listed materials and in the following format:

MATERIAL	SPEC DESIGNATION	MANUFACTURER	MATERIAL USED MFG. DESIGNATION	WHERE USED
Facing brick				
Brick pavers				
Elastomeric membrane waterproofing				
Spray-on insulation				
Roof insulation				
Expanded polystyrene aggregate roof fill				
Preformed metal siding				
Preformed metal roofing and fascia				
Composite metal siding				
Built-up bituminous roofing				
Window wall system				
Dispatch window				
Total vision glazing system				
Flush glazing system				
Gypsum plaster				
Veneer plaster				

Ceramic tile
Acid resisting quarry tile
Acoustical tile including
suspension systems
Sheet lead sound barrier
Slat flooring
Resilient flooring
Seamless flooring
Carpet
Epoxy topping
Wall covering
Corner guards and bumper guards
Bulletin boards
Interior signage
Exterior signage
Operable wall
Projection screen
Detention screens
Drapery tracks
Radio frequency shielding
Radiation protection

SAMPLE
AS-BUILT RECORD OF MATERIALS USED IN BUILDINGS

MATERIAL	SPEC. DESIGNATION	MANUFACTURER	MATERIAL USED MFG. DESIGNATION	WHERE USED
Built-up roofing	4 ply, rag felt asphalt	Ageless Manufacturing Co.	No. 15 asphalt saturated rag felt (perforated) AM 170 asphalt	All concrete roofs with slopes 1/2 inch & less
Plaster	Lightweight aggregate base coats	Century 21 Corporation	Blue Top Hi-Lite Plaster	All plastered interior surfaces except toilets
Windows	P-A2	Small Time Corporation	Tubular sections, series 535	All projected windows
Resilient tile	SS-T-312, type IV	Outer Space Company	Moonshot 70	All office spaces
			Space Probe 30	Corridors and entrance lobby

26. BORING LOGS: EFD Drawing No. 143474, Soil Boring Plan and Logs, EFD Drawing Nos. 143475 through 143486, Soil Boring Logs, and EFD Drawing No. 143550, Boring Log-Holcomb Boulevard are furnished to make available to the Contractor the information obtained by Government investigation. The Government does not guarantee that these borings indicate actual conditions other than at the exact locations and at the time they were made.

27. EMERGENCY MEDICAL CARE: Emergency medical care only is available at Government facilities at Marine Corps Base, Camp Lejeune to Contractor employees who suffer on-the-job injury or disease. Emergency care will be rendered at the prevailing rates established in BUMEDINST 6320.4 series. Reimbursement will be made by the Contractor to the Naval Regional Medical Center Collection Agent upon receipt of a monthly statement.

28. PROPRIETARY NAMES indicated for colors, textures and patterns of materials are for the purpose of color, texture and pattern selection only. Other manufacturer's materials are acceptable providing they closely approximate colors, textures and patterns indicated and providing they conform to all other requirements.

29. QUARANTINE FOR IMPORTED FIRE ANT (7/76). All of Onslow, Jones and Cartaret Counties and portions of Duplin and Craven Counties have been declared a generally infested area by the United States Department of Agriculture for the imported fire ant. Compliance with the quarantine regulations established by this authority as set forth in USDA Quarantine No. 81 dated 9 October 1970, and USDA Publication 301.81-2A of 23 July 1976, is required for operations hereunder. Pertinent requirements of the quarantine for materials, originating on the Camp Lejeune reservation and the Marine Corps Air Station (Helicopter), New River, which are to be transported outside the Onslow County or adjacent suppression areas, include the following:

a. Certification is required for the following articles, and they shall not be moved from the reservation to any point outside the Onslow County and adjacent designated areas unless accompanied by a valid inspection certificate issued by an authorized imported fire ant inspector.

1. Bulk soil.

2. Used mechanized soil-moving equipment.

3. Any other products, articles, or means of conveyance of any character whatsoever, not covered by sub-divisions (1) and (2), when it is determined by an inspector that they present a hazard of spread of the imported fire ant and the person in possession thereof has been so notified.

b. Authorization for movement of equipment shall be obtained from the Contracting Officer, and requests for inspection shall be made sufficiently in advance of the date of movement to permit arrangements for the services of authorized inspectors. The equipment shall be prepared and assembled so that it may be readily inspected. All soil on or attached to

"The Government will not be liable for any costs incurred by the Contractor for delays in removing equipment from the site due to quarantine restrictions/conditions."

equipment, supplies and materials shall be removed from the equipment by washing with water and such other means as necessary to accomplish complete removal. Resulting spoil shall be wasted as directed.

30. QUARANTINE FOR WHITE FRINGED BEETLES: The entire Camp Lejeune reservation (including Camp Geiger) and the Marine Corps Air Facility, New River, have been quarantined by the United States and North Carolina Departments of Agriculture for the white fringed beetle. Compliance with the quarantine regulations established by these authorities as set forth in the U.S.D.A. Quarantine No. 72 and North Carolina State Quarantine antine No. 7 is required for operations hereunder. Pertinent requirements of the quarantines include the following:

a. Certification is required for the following articles and they shall not be moved from the reservation unless accompanied by a valid inspection certificate issued by an authorized white fringed beetle inspector.

1. Soil, sand, or gravel moved independently or attached to other articles, such as heavy equipment including drag lines, road-grading machines, ditch diggers, bulldozers, and equipment with tracks or cleats.

2. Nursery stock, plants and sod.

3. Scrap metal.

Authorization for movement of equipment shall be obtained from the Contracting Officer, and requests for inspection shall be made sufficiently in advance of the date of movement to permit arrangements for the services of authorized inspectors. The equipment shall be prepared and assembled so that is may be readily inspected. Articles and materials requiring certification for movement shall be removed from the equipment by washing with water and such other means as necessary to accomplish complete removal. Resulting spoil shall be wasted as directed.

"The Government will not be liable for any costs incurred by the Contractor for delays in removing equipment from the site due to quarantine restrictions/conditions."

31x. CONTRACTOR-PREPARED NETWORK ANALYSIS SYSTEM (MAR 1973): The progress chart to be prepared by the Contractor pursuant to the Clause 62 of the General Provisions entitled "Progress Charts and Requirements for Overtime Work" shall consist of a network analysis system as described below. In preparing this system the scheduling of construction is the responsibility of the Contractor. The requirement for the system is included to assure adequate planning and execution of the work and to assist the Contracting Officer in appraising the reasonableness of the proposed schedule and evaluating progress of the work.

a. An example of one of the numerous acceptable types of network analysis systems is shown in Appendix A of Corps of Engineers Regulation ER 1-1-11 entitled "Network Analysis System", which may be examined in the office where bids are being received. Other systems which are designed to serve the

(b) The system shall consist of diagrams and accompanying mathematical analyses.

(1) Diagrams shall show the order and interdependence of activities and the sequence in which the work is to be accomplished as planned by the Contractor. The basic concept of a network analysis diagram will be followed to show how the start of a given activity is dependent on the completion of preceding activities and its completion restricts the start of following activities.

(2) Detailed network activities shall include, in addition to construction activities, the submittal and approval of samples of materials and shop drawings, the procurement of critical materials and equipment, fabrication of special material and equipment and their installation and testing. All activities of the Government that affect progress, and contract required dates for completion of all or parts of the work will be shown. The activities which comprise the following separate buildings and features shall be separately identifiable by coding or use of subnetworks or both:

Building or feature	Minimum number of activities

The selection and number of activities shall be subject to the Contracting Officer's approval. Detailed networks, need not be time scaled but shall be drafted to show a continuous flow from left to right with no arrows from right to left. The following information shall be shown on the diagrams for each activity: preceding and following event numbers, description of the activity, cost, and activity duration in calendar days.

(3) The mathematical analysis of the network diagram shall include a tabulation of each activity. The following information shall be furnished as a minimum for each activity.

(i) preceding and following event numbers:
(ii) activity description: (for fabrication and delivery activities, include quantities, i.e. LF, CY).
(iii) estimated duration of activities:
(iv) earliest start date (by calendar date):
(v) earliest finish date (by calendar date):
(vi) actual start date (by calendar date):
(vii) actual finish date (by calendar date):
(viii) latest start date (by calendar date):
(ix) latest finish date (by calendar date):
(x) slack or float: in calendar days, or weeks/days of calendar days:
(xi) monetary value of activity: (material and labor separate):
(xii) percentage of activity completed:

same purpose and employ the same basic principles may be accepted subject to the approval of the Contracting Officer.

b. The system shall consist of diagrams and accompanying mathematical analyses.

(1) Diagrams shall show the order and independence of activities and the sequence in which the work is to be accomplished as planned by the Contractor. The basic concept of a network analysis diagram will be followed to show how the start of a given activity is dependent on the completion of preceding activities and its completion restricts the start of following activities.

(2) Detailed network activities shall include, in addition to construction activities, the submittal and approval of samples of materials and shop drawings, the procurement of critical materials and equipment, fabrication of special material and equipment and their installation and testing. All activities of the Government that affect progress, and contract required dates for completion of all or parts of the work will be shown. The activities which comprise the following separate buildings and features shall be separately identifiable by coding or use of subnetworks or both:

BUILDING OR FEATURE	MINIMUM NUMBER OF ACTIVITIES
Hospital P.W. Building	80 100

The selection and number of activities shall be subject to the Contracting Officer's approval. Detailed networks shall be drafted to show a continuous flow from left to right. The following information, as a minimum, shall be shown on the diagrams for each activity: preceding and following event identifiers, description of the activity, cost, activity duration in days, subcontractor coding and code indicator to illustrate if activity affected by weather conditions.

(3) The mathematical analysis of the network diagram shall include a tabulation of each activity. The following information shall be furnished as a minimum for each activity:

(i) preceding and following event identifiers:

(ii) activity description: (for fabrication and delivery activities, include quantities, i.e., LF, CY)

(iii) estimated duration of activities:

(iv) earliest start date (by calendar date):

(v) earliest finish date (by calendar date):

(vi) actual start date (by calendar date):

(vii) actual finish date (by calendar date):

(viii) latest start date (by calendar date):

(ix) latest finish date (by calendar date):

(x) slack or float: in time units being utilized.

(xi) monetary value of activity including applicable portion of non direct costs: (material and labor separate)

(xii) percentage of activity completed:

(xiii) Contractor's earnings based on portion of activity completed:

(xiv) Subcontractor involved:

(4) The program or means used in making the mathematical computation shall be capable of compiling the total value (including a breakout of labor and material costs) of completed and partially completed activities; and subtotals for separate buildings or features listed in paragraph (b)(2). The program shall also be capable of accepting revised completion dates as modified by approved time adjustments and recomputations of all dates and float accordingly.

(5) The analysis to be submitted with each request for payment, but not less often than bi-monthly, shall list the activities in sorts or groups as follows:

(i) all activities involving submittals and submittal approvals only sorted as follows:

(a) by i - j sequence

(b) by early finish sequence

(ii) all activities in i - j sequence

(iii) all activities in i - j sequence completed (including that portion of partially completed activities)

(iv) all activities in i - j sequence remaining

(v) all uncompleted activities by amount of float (slack)

(vi) listing of activities scheduled for following 60 days by i - j sequence

(vii) all activities updated shall be sorted by i - j sequence

c. Submission and approval of the system shall be as follows:

(1) A preliminary network defining the Contractor's planned operations during the first sixty (60) calendar days after notice to proceed will be submitted within ten (10) days of notice of award. The Contractor's general approach for the balance of the project shall be indicated. Cost of activities expected to be completed or partially completed before submission and approval of the whole schedule shall be included.

(2) The complete network analysis system consisting of the detailed network mathematical analysis, schedule of anticipated earnings as of the last day of each month, and network diagrams shall be submitted within 30 calendar days after receipt of notice to proceed.

d. The Contractor shall participate in a review and evaluation of the proposed network diagrams and analysis by the Contracting Officer. Any revisions necessary as a result of this review shall be resubmitted for approval of the Contracting Officer within ten (10) calendar days after the conference. The approved schedule shall then be the schedule to be used by the Contractor for planning, organizing and directing the work, reporting progress, and requesting payment for work accomplished. If the Contractor thereafter desires to make changes in his method of operating and scheduling he shall notify the Contracting Officer in writing stating the reasons for the change. The Contracting Officer may require the Contractor to revise and submit for approval, without additional cost to the Government, all or the affected portion of the detailed diagrams and mathematical analysis to show the effect of proposed changes on the entire project.

e. The Contractor shall submit at monthly intervals a report of the actual construction progress by updating the mathematical analyses and logic diagram. Entering of updating information into the mathematical analysis will be subject to the approval of the Contracting Officer.

f. The report shall show the activities or portions of activities completed during the reporting period and their total value as basis for the Contractor's periodic request for payment. Payment made pursuant to the General Provision entitled "Payments to Contractor" will be based on the total value of such activities completed or partially completed after verification by the Contracting Officer. Payment for materials only will not be allowed unless shown as a separate procurement activity and materials are stored on site. The report will state the percentage of the work actually completed and scheduled as of the report date and the progress along the critical path in terms of days ahead or behind the allowable dates. The sorts indicated in Section 1.b(5) will be provided as a minimum with each update. If the project

is behind schedule, progress along other paths with negative float shall a be reported. The Contractor shall also submit a narrative report with updated analysis which shall include but not be limited to a description the problem areas, current and anticipated, delaying factors and their impa and an explanation of corrective actions taken or proposed.

g. Sheet size of diagram shall be 30 by 42 inches, unless anot size is approved by the Contracting Officer. Each updated copy shall sho date of the latest revision.

h. Initial submittal and revisions shall be submitted in th copies (one reproducible and two prints).

i. Periodic reports shall be submitted in three copies.

j. When modification to the contract work is required, the sta of the project schedule at the time of issuing the notice to proceed (N will be used to assess the total impact of the modification. The Contrac shall submit his proposed revisions necessitated by the modification within working days of request for proposal or NTP containing the informat indicated in Section 1(b)(2). Such a submittal may be made by annotatin dependence diagram accompanied by appropriate backup data and requests modifications in contract amounts. Upon tentative approval of logic resource changes (except total time extensions) by the Contracting Offic the Contractor will perform the mathematical analysis utilizing tentatively approved revised logic and the actual or estimated network sta at time of NTP to determine the impact of the change on project durati Such analysis shall be complete within 10 days of initial review. Fi resolution of the entire effect of the change will then proceed. T extensions will only be permitted if the instant change creates a proj duration, as adjusted to normally expected weather factors, beyond t currently in effect at the time the NTP is issued.

objection to any of the suggested logic and/or activity duration time cha he shall advise the Contracting Officer promptly, in writing, or objections fully supported by his own counterplan, and provided further, if the Contractor does not submit such written objection and counter within thirty (30) days after the date of the Notice-to-Proceed with modifications, the Contractor will be deemed to have concurred in Contracting Officer's suggested logic/duration time changes, which cha then will be the basis for any required equitable adjustment of the time performance of the work."

32. MAINTAINING TRAFFIC:

32.1 Full traffic flow shall be maintained on Holcombe, Stone Brewster Blvds. during construction. The minimum acceptable traffic flo Holcombe Blvd. during rush hours is a full four lanes moving at thorough speeds (35 + miles per hour).

32.2 Whenever the traveled portion of a roadway is cut for construc activities, only one-half of the road width shall be opened at one time order to maintain traffic. Before the other half is cut, the first ope

shall be made usable, safe, and maintained for traffic. No trench made in the travel portion of the roadway shall be left open overnight except in an emergency and only then when adequate barricades, signs, and lights are prominently displayed to protect the traveling public. The entire protion of the roadway disturbed for construction activities shall be restored in the manner specified in the section entitled "Pavement Removal and Replacement" and opened to traffic as rapidly as construction will permit.

32.3 Where one way traffic is being maintained, it shall be flagged twenty-four (24) hours per day. Flagmen shall be equipped with the standard "STOP" and "SLOW" signs on a rigid pedestal mounted 5' high, a red flag during daylight and a red light at night. The flagmen shall wear distinctive apparel such as a helmet and safety jacket. A pilot vehicle shall be used when, in the opinion of the Contracting Officer, such assistance to traffic is advisable.

Add the following new paragraphs:

"33 . OTHER CONTRACTS: The equipment for the energy monitoring control system (EMCS), the telephone system, and the nurse call system will be provided under separate contracts. All conduit and interface items required under this contract associated with these systems shall be complete and ready to receive the equipment not less than 12 months prior to contract completion date. The Contractor shall allow access and coordinate his work to avoid interference with other contracts to facilitate installation and testing of the systems. Merchantable timber turned over to the Government will be removed by separate contract."

"34 . USE OF STATION ROADS: Where construction traffic uses station roads, the Contractor will be required to maintain these areas free of construction related mud, dust, and debris."

"35. MAINTENANCE OF EQUIPMENT: The Contractor shall maintain all electrical and mechanical equipment and systems as recommended by the equipment manufacturer until the complete facility has been accepted by the Government. The CQCR shall maintain a log of all preventive maintenance performed on equipment. The log shall contain at a minimum the following information:

1. Equipment description
2. Serial and model number
3. Location
4. Description of maintenance performed
5. Date
6. Signature of individual performing the maintenance
7. Comments/Remarks

The log shall be available to the ROICC personnel upon request and shall be turned over to the ROICC upon completion of the project accompanied by a CQCR certification that the maintenance on the equipment has been performed in accordance with the manufacturers recommendations. Should the Contractor fail to maintain the equipment as recommended, the Contractor may be required to replace the equipment prior to final acceptance of the facility. The special requirements of the technical sections of the specifications pertaining to preventive measures to be taken for systems equipment shall be accomplished in addition to the above requirement."

SECTION 01012. ADDITIONAL GENERAL PARAGRAPHS

1. APPROVAL OF SAMPLES, CUTS, AND DRAWINGS: Matter submitted for approval shall be accompanied by complete information concerning the material, articles, and/or design proposed for use in sufficient detail to show compliance with the specification, and shall be approved before incorporation into the work. Approval thereof will not be construed as relieving the Contractor of compliance with the specification, even if such approval is made in writing, unless the attention of the Contracting Officer is called to the noncomplying features by letter accompanying the submitted matter. Partial submittals or submittals of less than the whole of any system made up of interdependent components, will not be considered. Approval of drawings, cuts, and samples by the Contracting Officer shall not be construed as a complete check or approval of the detailed dimensions, weights, gauges and similar details of the proposed articles. The conformance of such details with the contract requirements, together with the necessary coordination of dimensions and details between the various elements of the work and between the various subcontractors and suppliers, shall be solely the responsibility of the Contractor, approval of submitted matter notwithstanding.

2. OPERATION OF STATION UTILITIES: The Contractor shall not operate nor disturb the setting of any control devices in the station utilities system, including water, sewer, electrical and steam services. The Government will operate the control devices as required for normal conduct of the work. The Contractor shall notify the Contracting Officer giving reasonable advance notice when such operation is required.

3. CHANGED CONDITIONS: Wherever changed conditions as defined in Clause 4 of the General Provisions are encountered, and wherever conditions exposed during the course of the work necessitate a change from quantities indicated or specified as either estimated quantities or as a basis for bids, whether or not provision for a change in price for such variation is specified, the Contracting Officer must be notified in writing and written directions to do so must be obtained before quantities stated in the contract documents are exceeded.

4. SUBCONTRACTORS AND PERSONNEL: Promptly after the award of the contract, the Contractor shall submit to the Contracting Officer, in triplicate, a list of his subcontractors and the work each is to perform. On this form shall appear the names of the key personnel of the Contractor and subcontractors, together with their home addresses and telephone numbers, for use in event of any emergency. From time to time as changes occur and additional information becomes available, the Contractor shall amplify, correct, and change the information contained in previous lists.

5. AS-BUILT DRAWINGS: On completion of the work, one full-size print of each of the drawings accompanying this specification shall be neatly and clearly marked in red to show all variations between the construction actually provided and that indicated or specified in the contract documents, and delivered to the Contracting Officer. The

Contractor shall also mark the drawings to indicate the exact location of any underground utility lines discovered in the course of the work. Where a choice of materials and/or methods is permitted herein, and where variations in the scope or character of the work indicated or specified are permitted either by award on bidding items specified for that purpose or by subsequent change to the contract, the as-built drawings shall define the construction actually provided. The representation of such variations shall conform to standard drafting practice and shall include such supplementary notes, legends, and details as may be necessary for legibility and clear portrayal of the as-built construction; the marked prints shall be subject to approval of the Contracting Officer before acceptance.

6. PRINTS FURNISHED TO CONTRACTOR: Five copies of the project specification, five sets of one-half size prints and one set of full-size reproducibles of each drawing accompanying this specification will be furnished the Contractor without charge. Additional prints and full-size prints required by the Contractor shall be reproduced by him at his own expense.

7. LOCATION OF UNDERGROUND UTILITIES: Where existing piping, utilities, and underground obstructions of any type are indicated in locations to be traversed by new piping, ducts, and other work provided hereunder, and are not indicated or specified to be removed, the elevations of the existing utilities and obstructions shall be determined before the new work is laid closer than the nearest manhole or other structure at which an adjustment in grade could be made. For any additional work required by reason of conflict between the new and existing work, an adjustment in contract price will be made in accordance with Clause 4 of the General Provisions.

8. GEOGRAPHIC DISTRIBUTION OF DEFENSE SUBCONTRACT DOLLARS (1978 APR): (The following paragraphs apply only to contracts of $500,000 or more and contracts when modifications thereto increases the aggregate amount of the contract to $500,000 or more.)

(a) For each subcontract or modification thereof exceeding $10,000 the Contractor agrees to prepare and submit the report on DoD subcontracts in accordance with DD Form 2139.

(b) Negative reports will be submitted annually to the addressee contained on DD Form 2139, when applicable. Negative reports will be submitted not later than October 31 for the 12-month period ending September 30 of each year. Negative reporting will be continued until the contract or subcontract has been completed and the addressee contained in DD Form 2139 notified of its completion.

(c) The Contractor further agrees to insert the provisions of paragraphs (a) and (b) above in each subcontract in excess of $100,000 except subcontracts for ores, natural gas, utilities, petroleum products and crudes, timber (logs) and subsistence.

DELETED

9 . CERTIFICATE OF CURRENT COST OR PRICING DATA: (This paragraph is to be used when certification of cost or pricing data is required in accordance with ASPR 3-807.3.) The Contractor shall submit to the Contracting Officer a certificate in the form set forth below as soon as practicable after agreement is reached on the contract price:

9. CERTIFICATE OF CURRENT COST OR PRICING DATA: Delete this paragraph in its entirety and substitute the following therefor:

"9x. CERTIFICATE OF CURRENT COST OR PRICING DATA

This is to certify that, to the best of my knowledge and belief, cost or pricing data as defined in ASPR 3-807.1(a)(1) submitted, either actually or by specific identification in writing (see ASPR 3-807.3(a) to the Contracting Officer or his representative in support of _____* are accurate, complete, and current as of _____**
day month year

This certification includes the cost or pricing data supporting any advance agreement(s) and forward pricing rate agreements between the offeror and the Government which are part of the proposal.

Firm _____
Name _____
Title _____

_____***
Date of Execution

*Describe the proposal, quotation, request for price adjustment or other submission involved, giving appropriate identifying number (e. g. RFP No._____).

** The effective date shall be the date when price negotiations were concluded and the contract price was agreed to. The responsibility of the contractor is not limited by the personal knowledge of the contractor's negotiator if the contractor had information reasonably available at the time of agreement, showing that the negotiated price is not based on accurate, complete and current data.

*** This date should be as close as practicable to the date when the price negotiations were concluded and the contract price was agreed to."

10. NORTH CAROLINA STATE AND LOCAL SALES AND USE TAX (1977 JAN)

(a) As used throughout this clause, the term "materials" means building materials, supplies, fixtures and equipment which become a part of or are annexed to any building or structure erected, altered, or repaired under this contract.

(b) If this is a fixed-price type contract as defined in the Armed Services Procurement Regulation, the contract price includes North Carolina sales and use taxes to be paid with respect to materials, notwithstanding any other provision of this contract. If this is a cost-reimbursement type contract as defined in such regulation, any North Carolina sales and use taxes paid by the Contractor with respect to materials shall constitute an allowable cost under this contract.

(c) At the time specified in paragraph (d) below:

(i) The Contractor shall furnish the Contracting Officer certified statements setting forth the cost of the materials purchased from each vendor and the amount of North Carolina sales and use taxes paid thereon. In the event the Contractor makes several purchases from the same vendor, such certified statement shall indicate the invoice numbers, the inclusive dates of the invoices, the total amount of the invoices and the North Carolina sales and use taxes paid thereon. Such statement shall also include the cost of any tangible personal property withdrawn from the Contractor's warehouse stock and the amount of North Carolina sales or use tax paid thereon by the Contractor. The Contractor shall furnish such additional information as the Commissioner of Revenue of the State of North Carolina may require to substantiate a refund claim for sales or use taxes.

(ii) The Contractor shall obtain and furnish to the Contracting Officer similar certified statements by its subcontractors.

(d) If this contract is completed before the next October 1, the certified statements to be furnished pursuant to paragraph (c) above shall be submitted within 60 days after completion. If this contract is not completed before the next October 1, such certified statements shall be submitted on or before the 30th day of November of each year and shall cover taxes paid during the twelve month period which ended the preceding September 30.

(e) The certified statements to be furnished pursuant to paragraph (c) above shall be in the following form:

I hereby certify that during the period _____ to _____, (name of Contractor or subcontractor) paid North Carolina sales and use taxes aggregating $_____ with respect to building materials, supplies, fixtures and equipment which have become a part of or annexed to a building or structure erected, altered or repaired by (name of Contractor) for the United States of America, and that the vendors from whom the property was purchased, the dates and numbers of the invoices covering the purchases, the total amount of the invoices of each vendor, the North Carolina sales and use taxes paid thereon, and the cost of property withdrawn from warehouse stock and North Carolina sales or use taxes paid thereon are as set forth in the attachments hereto.

11. PROJECT IDENTIFICATION SIGNBOARD: A project identification signboard shall be provided. The signboard shall be 4 feet high by 8 feet long constructed at a conspicuous location on the job site where directed by the Contracting Officer. The field of the sign shall consist of one 4-foot by 8-foot sheet of grade B-B, medium density overlaid exterior plywood, not less than 1/2-inch thick. The signboard shall have a 2-inch by 2-inch frame applied to the face surface of the field and nailed from the back of the field with 6 penny galvanized nails. Corners of frame shall be mitered and nailed. A 3/4-inch quarter round shall be provided next to the 2-inch by 2-inch frame on the inner side and nailed with 6 penny finish nails, set and puttied. The completed signboard shall be secured to two 4-inch by 4-inch posts with 10 penny aluminum nails, 6 inches on centers, driven slightly recessed and puttied. The signboard shall be mounted with the bottom 4 feet, 6 inches above grade. The posts shall be set 3 feet into the ground and tamped tight. Each post shall extend to the top of the signboard and shall have a 2-inch by 4-inch diagonal brace nailed to the top of the post extending down to a 3 foot, 2-inch by 4-inch stake driven 2 feet, 6 inches into the ground. A 2-inch by 4-inch strut shall be provided from brace to brace midway from top to bottom, and nailed at each brace with three 10 penny nails. The posts shall be set 5 feet center to center. All lumber shall be B or Better Southern pine, pressure-preservative treated with pentachlorophenol. All nails shall be aluminum or galvanized steel. The entire signboard and supports shall be given one coat of exterior oil primer and two coats of exterior lead and oil paint. The lettering and sign work shall be performed by a skilled sign painter using paint known in the trade as bulletin colors. The 2-inch by 2-inch frame shall be painted black, the quarter round shall be painted gray, and the lettering shall be single stroke using bulletin blue. The lettering style shall be "Gothic", "Roman capitals", or "Thick and Thin" styles.

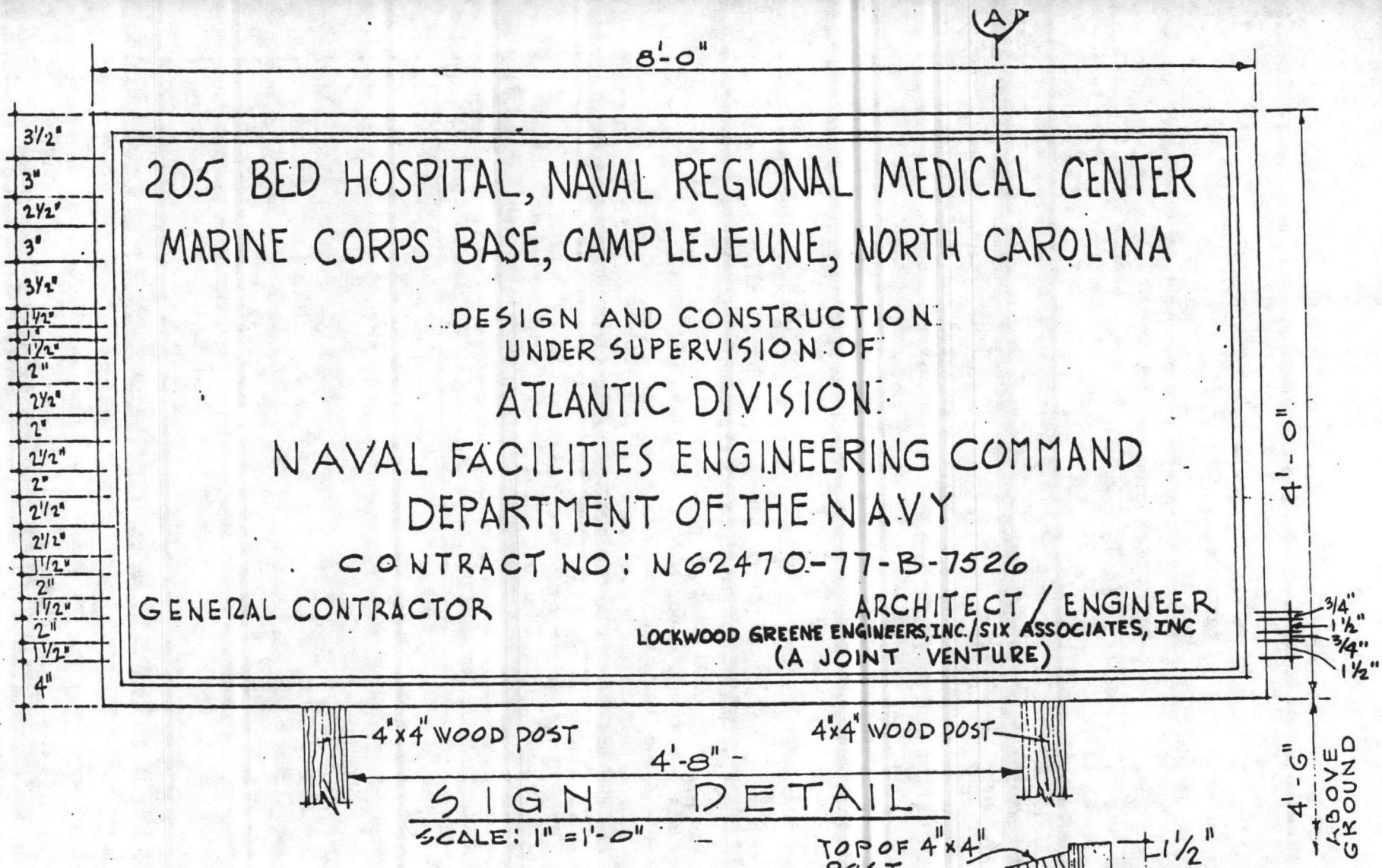
8'-0"
A
3½"
3"
2½"
3"
3½"
1½"
1"
1½"
2"
2½"
2"
2½"
2"
2½"
2½"
1½"
2"
1½"
2"
1½"
4"
205 BED HOSPITAL, NAVAL REGIONAL MEDICAL CENTER
MARINE CORPS BASE, CAMP LEJEUNE, NORTH CAROLINA
DESIGN AND CONSTRUCTION
UNDER SUPERVISION OF
ATLANTIC DIVISION
NAVAL FACILITIES ENGINEERING COMMAND
DEPARTMENT OF THE NAVY
CONTRACT NO: N62470-77-B-7526
GENERAL CONTRACTOR
ARCHITECT / ENGINEER
LOCKWOOD GREENE ENGINEERS, INC./SIX ASSOCIATES, INC
(A JOINT VENTURE)
4'-0"
3/4"
1½"
3/4"
1½"
4"x4" WOOD POST
4'-8"
4"x4" WOOD POST
4'-6" ABOVE GROUND
SIGN DETAIL
SCALE: 1" = 1'-0"
TOP OF 4"x4" POST
4'-0"x8'-0"x3/4" EXTERIOR PLYWOOD
1½"
3/4"
3/4"
1½"
SECTION A
SCALE 1½" = 1'-0"

SECTION 01400. QUALITY CONTROL (FOR CQC PROJECTS)

1. QUALITY CONTROL REQUIREMENTS: This contract will be administered under Clause entitled "Contractor Quality Control" of the General Provisions.

2. DEFINITIONS:

2.1 Contractor Quality Control (CQC): Contractor Quality Control is the quality inspection and control system established and carried out by the Contractor to insure compliance with the contract drawings and specifications.

2.2 Quality Level: The specific degree of excellence, basic nature, character, or kind of performance of a particular item or group of items as indicated or specified.

2.3 Approval: In accordance with the "expressly stated" provision of Clause entitled "Additional Definitions" of the General Provisions, when the words "approval", "approved", or words of similar meaning or import are used, they shall mean approval by the Contractor's Quality Control Organization unless specifically stated otherwise in the technical sections of the specification for the particular approval involved. All approvals shall be obtained prior to custom fabrication and before delivery of materials and equipment to the project site.

2.4 Certified Test Reports: Certified test reports are reports of tests signed by a qualified professional attesting that the test results reported are accurate and that items tested either meet or fail to meet the stated minimum requirements. These test reports include those performed by Factory Mutual, Underwriters Laboratories, Inc., and others.

2.5 Certified Inspection Reports: Certified inspection reports are those signed by approved inspectors attesting that the items inspected meet the specification requirements other than those exceptions included in the report.

2.6 Manufacturer's Certificate of Conformance or Compliance: A certificate signed by an authorized manufacturer's official attesting that the material or equipment delivered meets the specification requirements.

3. TESTS: All testing shall be divided into three categories as follows:

a. Field Tests, made at, or in the vicinity of the job site in connection with the actual construction including but not limited to concrete batch plants, asphalt batch plants, and similar establishments directly involved in the construction process.

b. Factory Tests, made at the point of manufacture of various products which are shipped to the job site as a unit, including but not

limited to such items as transformers, boilers, air conditioning equipment, and electrical equipment.

c. Certified Tests, made by approved testing agencies on material and equipment which is to be incorporated into the structure under the contract. These tests are those such as are performed by Factory Mutual, Underwriter's Laboratories, Inc., and others.

3.1 Field Tests:

3.1.1 Field Tests by the Contractor: Except as specifically stated otherwise in the contract specifications, the Contractor shall perform all field testing required under this contract including all field tests required by the "Applicable Publications" referenced in the contract specification. He shall furnish all equipment, instruments, qualified personnel, and facilities necessary to perform all tests required by the contract documents. Testing services shall be performed by the Contractor or acquired by the Contractor through a qualified commercial testing laboratory. If a commercial testing laboratory is retained to perform tests under this contract, all test reports shall be certified by a representative of the testing laboratory who is authorized to sign certified test reports for the laboratory. Test reports shall include the acceptable value for each specification item, the actual test results obtained and the test methods used. Each report shall be conspicuously stamped on the cover sheet in large red letters "CONFORMS" or "DOES NOT CONFORM" to the specification requirements as the case may be. The Contractor shall arrange for immediate and direct delivery of the signed original of all reports, certifications, and other documentation to the Contracting Officer.

3.1.2 Field Tests by the Government: Field tests conducted by the Government will be made in accordance with the provisions of Clause entitled "Inspection and Acceptance" of the General Provisions.

3.2 Factory Tests: The Contracting Officer will arrange for factory tests when Government control of testing is required.

3.3 Manufacturer's Certified Tests: Certified tests on materials to be incorporated into the work will be acceptable, provided they are performed by the manufacturer or by Government approved agencies or laboratories, show that the materials conform to the specification, and that the tests and certifications meet the requirements of the paragraph entitled "Certificates and Certifications" below.

3.4 Government Approval of Laboratories: All laboratory work performed under this contract shall be done by a laboratory approved by the Government, whether the laboratory is employed by the Contractor or the Navy, or is owned and operated by the Contractor. The basis of approval includes the following:

a. Laboratories performing work in connection with concrete steel and bituminous materials must conform to American Society for Testing and

Materials (ASTM) designation E329-72, except that the Contracting Officer will perform the function of paragraphs 3.4 and 3.5 therein in the absence of other Government approval.

b. Laboratories performing work not in connection with concrete, steel or bituminous materials must conform to sections 3 and 4 of ASTM Designation E329-72, except that the Contracting Officer will perform the functions of paragraphs 3.4 and 3.5 therein in the absence of other Government approval.

4. INSPECTION: All inspection shall be divided into two categories as follows:

a. Field Inspection, is that inspection in the vicinity of the job site which, when performed properly, will result in the complete compliance of all work-in-place with the contract drawings and specifications.

b. Factory Inspection is that inspection at the point of manufacture of the various products which are shipped to the job site, including but not limited to such items as transformers, boilers, air conditioning equipment, and electrical equipment.

4.1 Contractor Field Inspection: The Contractor, through his CQC representative and staff, shall inspect all work under this contract. As a minimum, inspection procedures shall be performed and recorded on a Contractor's Quality Control Daily Report form in accordance with Clause entitled "Contractor Quality Control" of the General Provisions. A sample format of an acceptable form is attached at the end of the section. While the use of this sample format is not required, any other format must contain the same information as shown on the sample.

4.2 Government Field Inspection: The Government will assign a Construction Representative to the project who will be the primary point of contact for the Contractor with the Government. The Navy Construction representative will review the Contractor's quality reports, perform surveillance of the Contractor's testing and inspection procedures, and perform such job inspections as deemed necessary. He will visit the construction site whenever it is considered necessary or advisable. The Navy Construction Representative will exercise the right of the Government to accept materials, workmanship and/or construction in place in accordance with the GENERAL PROVISIONS Clause entitled "Inspection and Acceptance". No actions of the Navy Construction Representative shall be construed to relieve the Contractor of his responsibility under Clause entitled "Contractor Quality Control" of the General Provisions to inspect and certify the work as being in complete compliance with the contract documents.

4.3 Factory Inspection: The Contracting Officer will arrange for factory inspection when Government control of inspection is required.

4.1 Contractor Field Inspection: After second sentence add the following:

"Work items shall be referenced to the Network Analysis System by activity."

5. SUBMITTALS: Submittals required by the technical sections of the contract specifications shall be approved and certified by the Contractor in accordance with the Contractor Quality Control Clause of the GENERAL PROVISIONS, unless specifically stated otherwise, in which case the Clauses entitled "Shop Drawings" and "Catalog Data" of the GENERAL PROVISIONS apply. In addition, each item proposed to be incorporated into the project shall be clearly marked and identified in the submittals and catalog cuts and shall be cross-referenced to the contract drawings and specifications so as to identify clearly the use for which it is intended. The Contractor shall maintain at the job site, an up-to-date submittal status log showing the status of all submittals required by the contract. A sample format of an acceptable log is attached at the end of this section. While the use of this sample format is not required, any other format must contain the same information as shown on the sample. A sample form, available from the Contracting Officer, may be used for this purpose.

5.1 Shop Drawings and Manufacturer's Data: Shop drawings and manufacturer's data such as catalog cuts, technical data sheets, and descriptive literature shall have each sheet stamped with the Contractor's approval stamp, except that data submitted in a bound volume or on one sheet printed on two sides may be stamped on the front of the first sheet only. The approval stamp shall have blanks to indicate whether Government approval or Contractor approval is required by the contract. The stamp shall be worded as follows:

> "It is hereby certified that the (material) (equipment) shown and marked in this submittal is that approved/proposed to be incorporated into Contract Number _____, is in compliance with the contract drawings and specifications, and can be installed in the allocated spaces, and is (approved for use) (submitted for Government approval).
>
> Authorized Reviewer _____ Date _____.
>
> Signature CQC Rep _____ Date _____."

The person(s) signing the certification shall be the one(s) designated in the Contractor Quality Control Plan as having this authority. The signature(s) shall be in original ink. Stamped signature will not be acceptable.

5.2 Samples: Samples shall be prepared and submitted in accordance with Clause entitled "Samples" of the General Provisions. The Contractor shall check and approve all samples of material and equipment proposed for incorporation in the project. Where specifically required in the technical sections of the contract specifications, Contractor-approved samples and samples submitted for Government approval shall be delivered to the Contracting Officer. The approved samples shall be identified as to their intended use, and shall be accompanied by a letter of certification from the

Contractor stating that the samples comply with the contract drawings and specifications. Where practicable, the samples shall be stamped with the Contractor's approval stamp, properly applied and signed.

5.3 Certified Test Reports: Before delivery of materials and equipment, certified copies of the reports of all tests listed in the technical sections and referenced publications shall be submitted and approved. The testing shall have been performed in a laboratory meeting the requirements specified herein. Test reports shall be accompanied by certificates from the manufacturer certifying that the material and equipment proposed to be supplied is of the same type, quality, and make as that tested.

5.4 Formwork, Falsework, and Erection Procedures Certification: When the Contractor is required to submit a design or certification for formwork, falsework or erection procedures, CQC Daily Reports must certify that the work has been inspected for conformance to the design or certification. A specific statement for these items rather than a general statement is required.

6. CERTIFICATES AND CERTIFICATIONS: Manufacturer's certification may be furnished by the Contractor, on items of materials and equipment incorporated into the work, only when this method will assure full compliance with the provisions of the contract, as determined by the Contracting Officer. Pre-printed certifications will not be acceptable. All certifications shall be in the original. The original of all manufacturer's certifications shall name the appropriate item of equipment or material, specification, standard or other document specified as controlling the quality of that item and shall have attached thereto certified copies of test reports upon which the certifications are based.

---END---

SAMPLE FORM (REDUCED FROM 15½" X 10½")

CQC SUBMITTAL STATUS LOG

"SEE INSTRUCTIONS ON REVERSE BEFORE FILLING IN"

CONTRACT NUMBER | SHORT TITLE | LOCATION | PAGE _____ OF _____ | CONTRACTOR

SUBMITTAL/ TRANSMITTAL NO.	DESCRIPTION OF ITEMS	SPECIFICATION SECTION REQUIRING SUBMITTAL	SUBMITTAL REQUIRES					CONTRACTOR APP'D	GOV'T APPROVED	CONTRACTOR ACTION		DATE FORWARDED TO ROICC	ROICC ACTION		DATE			REMARKS
			SHOP DWGS.	CATALOG DATA	SAMPLE	CERTIFICATION	TEST DATA			INSERT ACTION CODE	DATE OF ACTION		INSERT ACTION CODE	DATE OF ACTION	RECEIVED FROM ROICC	MAT'L./EQUIP RECEIVED ON SITE	APPROVED BY CONTRACTOR	
(a)	(b)	(c)	(d)					(e)		(f)		(g)					(h)	(i)

INSTRUCTIONS

This form may be used by the contractor for listing all material submittals that require action by either the contractor or the government.

Columns (a) through (e) should be completed by the contractor and must include all submissions that required by the specifications. This partially completed form then becomes the submittal log tion of the CQC Plan.

As submittals are received and processed, the remaining columns are to be completed by the contractor.

In those instances where the contractor has approved the submittal under his contract responsibility, re may be a dual Action Code indicated under column (f); e.g., "A/E", indicating approved as sub- ted and forwarded to the ROICC for record purpose.

5. In column (f) for those items requiring ROICC action (Action Code "D"), the reason for forwarding to the ROICC should be entered in the column (i), the Remarks column; e.g., gov't approval required; waiver requested because of variance, substitution, etc.

6. Where no government action is required, (for contractor review/approval items), there need be no entry in columns (h) and (i).

7. Column (j) is completed when material or equipment is delivered to the project. Column (k) is completed only after verification that the delivered item is that represented by the approved submittal.

ACTION CODE: To be used when completing columns (f) and (h)

A - Approved as submitted
B - Approved as noted
C - Disapproved
D - Forwarded to ROICC for action
E - Forwarded to ROICC for record purpose

05-77-7526
0140-7

CONTRACTOR'S QUALITY CONTROL DAILY REPORT (SAMPLE FORMAT)

Complete report in detail daily. If more space is needed, attach additional sheets. CQC REP to date and initial additional sheets. Attach test reports, delivery slips, references and daily report to Inspector Per Clause 93, additional General Provisions Box 7- indicate contractor or trade responsible for work described in Box 8; Box 9- as applicable; Box 11- Note all deficiencies.

1. CONTRACTOR				2. REPORT NO.
3. CONTRACT NO. SHORT TITLE LOCATION				4. SHEET NO. OF
5. WEATHER	A.M.	TEMPERATURE	A.M. °F	6. DATE 19____
	P.M.		P.M. °F	

7. CONTRACTOR SUB-CONTRACTOR	8. LOCATION AND DESCRIPTION OF WORK PERFORMED THIS DATE	9. SPEC. SEC/PAR AND/OR DWG. NO.

SPEC. PAR. AND/OR DWG. NO.	10. EQUIPMENT AND MATERIAL INCORPORATED IN THE JOB THIS DAY	SUBMITTAL NO. OR CERTIFICATION	DATE APPROVED

SPEC. PAR. AND/OR DWG. NO.	11. LOCATION AND DESCRIPTION OF DEFICIENCIES *(Materials, Equipment and/or Workmanship)* ACTION TAKEN OR TO BE TAKEN

SPEC. PAR. AND/OR DWG. NO.	12. SAMPLING AND TESTING PERFORMED ONSITE - OFFSITE FOLLOW WITH REPORT	BY WHOM	RESULTS	
			ACTUAL	REQUIRED

13. DEFICIENCIES CORRECTED THIS DATE	REFERENCE	
	CQC REPORT #	COMPLIANT #

14. REMARKS INCLUDE DIRECTIONS RECEIVED FROM ROICC/AROICC, VISITORS, COMPLIANCE NOTICES RECEIVED; ERRORS AND/OR OMISSION IN P/S. PERTINENT INFORMATION

15. CONTRACTOR'S CERTIFICATION: ON BEHALF OF THE CONTRACTOR, I CERTIFY THAT THIS REPORT IS COMPLETE AND CORRECT AND ALL EQUIPMENT AND MATERIAL USED AND WORK PERFORMED DURING THIS REPORTING PERIOD ARE IN COMPLIANCE WITH THE CONTRACT PLANS AND SPECIFICATIONS, TO THE BEST OF MY KNOWLEDGE, EXCEPT AS NOTED ABOVE.

Authorized CQC Rep At Site *Date*

D 1480-2

SECTION 01501. ENVIRONMENTAL PROTECTION

1. ENVIRONMENTAL PROTECTION PLAN: The Contractor shall be responsible for the preparation and submission of an environmental protection plan. After the contract is awarded, but prior to the commencement of the work, the Contractor shall meet with the Contracting Officer, or his representative, and discuss the proposed environmental protection plan. The meeting shall develop mutual understanding relative to details of environmental protection, including required reports and measures to be taken should the Contractor fail to provide adequate protection in an adequate and timely manner. Not more than 14 days after the meeting, the Contractor shall submit for approval his proposed environmental protection plan.

2. GENERAL REQUIREMENTS: The Contractor shall provide and maintain environmental protection during the life of the contract as defined herein. The Contractor's operations shall comply with all Federal, State, and Local regulations pertaining to water, air, solid waste, and noise pollution.

3. DEFINITIONS OF POLLUTANTS:

3.1 Non-Hazardous Wastes: Solid or liquid substances that are to be discarded by the Contractor and that normally do not constitute a hazard to man or to the environment. This includes, but is not limited to, paper, metal (other than toxic metals such as lead and mercury), masonry, wood, brick, stone, asphaltic concrete, plastics, rubber, rubbish and concrete.

3.2 Hazardous Wastes: Solid and liquid substances that are to be discarded by the Contractor and that constitute a significant active or potential hazard to man and/or to the remainder of the environment. This includes, but is not limited to, asbestos, glass, lead, mercury, pesticides, herbicides, other toxic chemicals and waste, liquid petroleum products, human excrement, garbage, sediment, and radioactive materials.

3.2.1 Sediment: Soil that has been eroded and transported by running water.

3.2.2 Garbage: Waste foodstuffs.

3.2.3 Human Excrement: Solid or liquid wastes produced by the human body.

4. PROTECTION OF NATURAL RESOURCES:

4.1 General: It is intended that the natural resources within the project boundaries and outside the limits of permanent work performed under this contract be preserved in their existing condition or be restored to an equivalent or improved condition upon completion of the work. The Contractor shall confine his construction activities to areas defined by the work schedule, plans, and specifications.

4.2 Land Resources: The Contractor shall not remove, cut, deface, injure, or destroy trees or shrubs without written permission from the Contracting Officer. No ropes, cables, or guys shall be fastened to or attached to any existing nearby trees for anchorages unless specifically authorized. Where such special emergency use is permitted, the Contractor shall be responsible for any damage resulting from such use.

4.2.1 Protection Plan: Where trees may possibly be defaced, bruised, injured or otherwise damaged by the Contractor's activity, equipment, or by his dumping, or other operations, the Contractor shall submit a plan for protecting such trees. Monuments, markers, and works of art shall be protected before beginning operations. A preconstruction survey including photographs shall be accomplished by the Contractor and a report of survey furnished when required by the Contracting Officer.

4.2.2 Repair or Restoration: Any trees or other landscape features scarred or damaged by the Contractor's equipment or operations shall be repaired and/or restored to its original condition at the Contractor's expense. The Contracting Officer shall approve the repair and/or restoration planned prior to its initiation.

4.2.3 Temporary Construction: The Contractor shall obliterate all signs of temporary construction facilities such as work areas, structures, stockpiles of excess or waste materials, or any other vestiges of construction as directed by the Contracting Officer.

4.3 Water Resources: It shall be the responsibility of the Contractor to investigate and comply with all applicable Federal, State, and Local regulations concerning the discharge (directly or indirectly) of pollutants to the underground and natural waters. All work under this contract shall be performed in such a manner that any adverse environmental impacts are reduced to a level that is acceptable to the Contracting Officer.

4.4 Oily Substances: At all times, special measures shall be taken to prevent oil or other hazardous substances from entering the ground, drainage areas, or local bodies of water in such quantities as to affect normal use, aesthetics or produce a measurable ecological impact on the area.

4.5 Historical and Arheological Resources: All items having any apparent historical or archeological interest which are discovered in the course of any construction activities shall be carefully preserved and reported immediately to the Contracting Officer for determination of actions to be taken.

5. EROSION AND SEDIMENT CONTROL MEASURES:

5.1 Applicable Regulations: The North Carolina Administrative Code, Title 15, Subchapter 4B, "Erosion and Sediment Control", referred to hereafter as 15NCAC4B, forms a part of this specification.

5.2 General Requirements: The Contractor shall provide and maintain approved temporary erosion and sedimentation control measures during the life of the contract as defined herein. Permanent devices are specified under section entitled "Earthwork," "Storm Drainage Systems," and "Establishing Vegetation".

5.2.1 Pre-Approved Plan: The drawings and specifications provided to the Contractor for bidding purposes will have been approved by the Land Quality Section, North Carolina Department of Natural Resources and Community Development as satisfying plan requirements of 15 NCAC 4B.

5.2.2 Notification Required: The Regional Engineer, Land Quality Section, North Carolina Department of Natural Resources and Community Development, 3143 Wrightsville Avenue, Wilmington, N.C. 28401, telephone (919) 762-3394, shall be notified not less than 10 days in advance of the time and place of the preconstruction conference for the project so that a representative of that office may plan to attend the conference.

5.2.3 Definitions: The listing of definitions in 15 NCAC 4B shall apply to this project.

5.2.4 Basic Objectives of Control Measures: The following objectives, described more fully in 15 NCAC 14B, shall apply to this contract:

a. Identify critical areas.

b. Limit exposed areas.

c. Limit time of exposure.

d. Control sedimentation.

e. Manage storm water runoff.

5.2.5 Continuous Protection: The erosion and sedimentation control measures shall be initiated at the time clearing begins and shall be continued to the end of the contract. Protection of on-site and off-site areas shall be total and without gaps.

5.2.6 Modifications: The individual locations and extent of the temporary protective devices indicated on the drawings shall be considered schematic. The Contractor shall make at his expense the necessary, reasonable modifications to the devices indicated to better fit the actual field conditions. Such modifications shall not diminish the level of protection required by 15 NCAC 14B.

5.3 Materials: The materials listed are for temporary erosion and sediment control devices.

5.3.1 Posts and Stakes: Either wood posts or steel posts may be used. Wood posts shall be a minimum of 6 feet long, at least 3 inches in diameter, or larger if so indicated on the drawings, and reasonably straight. Steel posts shall be at least 5 feet long, 1-3/4" wide, and have projections for fastening the wire to the fence. Stakes shall be of smaller dimensions.

5.3.2 Wire Fence Fabric: Wire fence fabric shall be at least 32 inches high, and shall have at least 6 horizontal line wires. Vertical stay wires shall be spaced 12 inches apart. The top and bottom wires shall be at least 10 gage. All other wires shall be at least 12-1/2 gage.

5.3.3 Burlap: Burlap shall be at least 36 inches wide and shall weigh at least 6.7 ounces per square yard. Other materials may be used in lieu of burlap, provided these materials have been approved by the Contracting Officer.

5.3.4 Wire Staples: Wire staples shall be a No. 9 staple and shall be at least 1-1/2 inches long.

5.3.5 Brush Barrier Materials: Materials shall consist of brush and foliage, logs, and any other materials necessary to construct an effective brush barrier. Materials may be obtained from clearing operations of the project, or shall be furnished by the Contractor.

5.3.6 Guy Wire: Guy wire shall be not less than 7 gage, galvanized steel.

5.3.7 Tie Wire: Tie wire shall be not less than 16 gage, galvanized steel. Other equivalent materials such as hog rings may be used.

5.3.8 Silt Check Dam Materials: Materials shall consist of brush and foliage, logs, wire, woven wire, and any other materials necessary to construct an effective silt check dam. Materials may be obtained from clearing operations of the project, or shall be furnished by the Contractor.

5.3.9 Temporary Vegetation Materials: The Contractor shall use his choice of the following:

a. Seed for Winter-Spring Use:

1) Annual ryegrass, 40-50 lbs./acre
2) Rye, 110-150 lbs./acre
3) Spring oats, 95-125 lbs./acre

b. Seed for Summer Use:

1) Sudan or sorghum hybrids, 40-50 lbs./acre
2) Brown top millet, 40 lbs./acre

c. Seed for Late Summer-Late Fall Use:

1) Annual ryegrass, 35-45 lbs./acre
2) Rye, 100-150 lbs./acre
3) Oats, 95-125 lbs./acre

5.3.10 Mulch for Temporary Seeding: On steep slopes and other areas where mulch is required to hold the seed for satisfactory germination, use wood cellulose mulch at not less than 500 lbs./acre.

5.3.11 Temporary Mulch Materials: One of the following materials shall be used and shall be free of undesirable weed seeds, air dry and non-toxic to plants:

a. Straw or hay, baled, 1-1/2 - 2 tons/acre.

b. Wood excelsior, 80 to 90 lb. bales, 1-1/2 - 2 tons/acre.

c. Wood cellulose fiber, 1-1/4 to 2 tons/acre.

d. Pine straw, baled, 1 - 2 tons/acre.

5.3.12 Mulch Anchoring Materials: To prevent displacement of mulch by wind or water, use one or more of the following methods which is appropriate for the type of mulch to be secured:

a. Asphalt emulsion, 150 gal./ton of straw or hay.

b. Cutback asphalt, 200 gal./ton of straw or hay.

c. Disk or pick chain to press straw, hay or pine straw into the soil.

d. Peg and twine network to anchor straw, hay or pine straw.

5.3.13 Fertilizer for Temporary Vegetation: Fertilizer shall conform to requirements of the North Carolina Department of Agriculture. 10-10-10 analysis fertilizer shall be applied at the rate of 600 lbs./acre.

5.3.14 Straw and Hay Bales: Clean, baled straw or hay may be utilized for movable sediment barriers across access roads and for off-site utility work where necessary. Bales shall also be used around storm drain inlets as indicated on the drawings.

5.4 Installation:

5.4.1 Siting of Devices: Temporary protective work shall be performed so that no unreasonable clearing is necessary and so that equipment operation and sediment accumulation will not endanger existing trees.

5.4.2 Silt Fences and Brush Barriers: Erect fences or barriers as detailed on the drawings.

5.4.3 Silt Check Dams: Install silt check dams where indicated on the drawings.

5.4.4 Silt Basins: Install silt basins at locations indicated on the drawings. Other basins shall be furnished as required under the paragraph Temporary Earthworks hereinafter.

5.4.5 Temporary Vegetative Cover: Uniformly place seed and fertilizer, plus any mulch necessary to hold the seed in place, to establish temporary vegetation or permanent vegetation within 30 working days after the completion of any phase of grading on any exposed soil area. Temporary vegetation will not be required where permanent vegetation is being established as part of the contract or where temporary mulch is used for practical reasons.

5.4.6 Temporary Mulch: Where it is not practical to establish temporary or permanent vegetation within 30 working days after the completion of any phase of grading, install temporary mulch, spread uniformly over the area, and anchor it where necessary to prevent displacement by wind or water.

5.4.7 Temporary Earthworks: The Contractor shall form any necessary berm, ditch, basin, diversion or other earthwork to temporarily control surface runoff in conjunction with other measures described in this section. Soil from the site shall be used for this purpose. These locations are not indicated on the drawings and shall be determined in the field by the Contractor, with the Contracting Officer's approval.

5.4.8 Off-site Utility Work: No erosion control devices are indicated on the drawings for this work. The Contractor shall provide whatever protection is appropriate if any property or water course is endangered by sediment from the work. In general, care in workmanship, straw or hay bales and mulch will satisfy most protection requirements in these linear areas.

5.5 Maintenance:

5.5.1 Effectiveness: All temporary protection measures shall be maintained in completely effective working order. Accumulated sediment shall be cleaned out from behind filters and from pits so that not less than 50% of the original filter area or basin volume shall be available for immediate use. Washed out mulched or seeded areas shall be promptly repaired.

5.5.2 Adjustments: The Contractor shall daily monitor the protective means used and make whatever additions, adjustments and cleanup operations are necessary to provide complete protection in compliance with 15 NCAC 4B. Temporary protection may be gradually reduced as permanent devices and vegetation provide adequate protection.

5.6 Cleanup: At the end of the project, all temporary protection shall have been removed and a finished appearance established in all project areas. Interim and final disposal of waste materials shall be made at appropriate base disposal areas. Trapped sediment which is suitable for fill may be used under the topsoil in areas of the site which are to be permanently grassed; otherwise, sediment shall be removed to the proper base disposal area.

5.7 Sequence of Protective Measures: The following sequence of protection shall be provided:

a. Install silt fences and/or brush barriers and earthworks as clearing and grubbing progresses.

b. Install additional fences, barriers and earthworks and provide check dams, silt basins and sediment barriers as earthwork progresses.

c. Establish the permanent vegetation or pavement systems as soon as practical after finished grades have been reached.

d. Provide temporary mulch or vegetation where permanent control measures must be delayed beyond the 30 working-day period.

[redacted]

f. Phase out temporary measures as permanent measures are completed.

g. Remove all temporary measures and clean up by the end of the contract.

6. CONTROL AND DISPOSAL OF HAZARDOUS AND NON-HAZARDOUS WASTES:

6.1 Non-hazardous Wastes: Non-hazardous wastes shall be picked up and disposed of daily or placed in containers which are emptied on a weekly schedule. All handling and disposal shall be so conducted as to prevent contamination of the site and any other areas. The Contractor shall dispose of solid waste in the Base sanitary land fill. Base sanitary land fill is within 10 miles of the Project Site. Upon completion, the work and disposal areas shall be left clean and natural looking. All signs of temporary construction and activities incidental to construction of the required permanent work in place shall be obliterated.

6.2 Hazardous Wastes:

6.2.1 Garbage Disposal: The Contractor shall transport his garbage to the Sanitary Landfill or off Base. The preparation, cooking and disposing of food are strictly prohibited on the project site.

6.2.2 Sewage, Odor and Pest Control: Chemical toilets or comparably effective units shall be used with wastes periodically emptied into municipal, district, or Base sanitary sewage systems. Provisions shall be included for masking or elimination of odors and pest control. Compliance with Federal, State, and Local regulations shall be established by the Contractor providing the Contracting Officer with a copy of the permit or license when applicable.

6.2.3 Liquid Wastes: Liquid wastes shall be stored in corrosion-resistant containers, removed from the project site, and disposed of not less frequently than monthly unless directed otherwise. Disposal of liquid waste shall be in accordance with Federal, State and Local regulations. Fueling and lubricating of equipment and motor vehicles shall be conducted in a manner that affords the maximum protection against spills and evaporation. For oil and hazardous material spills which may be large enough to violate Federal, State and Local regulations, the Contracting Officer shall be notified immediately.

---END---

SECTION 02200. EARTHWORK

1. APPLICABLE PUBLICATIONS: The following publications of the issues listed below, but referred to thereafter by basic designation only, form a part of this specification to the extent indicated by references thereto:

1.1 Military Standards:

MIL-STD-619B	Unified Soil Classification System for Roads, Airfields, Embankments and Foundations.

1.2 American Society for Testing and Materials (ASTM) Publications:

C136-76	Test for Sieve Analysis of Fine and Coarse Aggregates.
D423-66(1972)	Test for Liquid Limits of Soils.
D424-59(1971)	Test for Plastic Limit and Plasticity Index of Soils.
D698-70	Moisture-Density Relationship of Soils Using 5.5-lb. (2.5kg) Rammer and 12-in (304.8mm) Drop.
D1140-54(1971)	Amount of Material in Soils Finer than the No. 200 Sieve.
D1556-64(1974)	Density of Soil in Place by the Sand-Cone Method.
D1557-70	Moisture-Density Relations of Soils Using 10-lb. (4.5 kg.) Rammer and 18-in. (457mm) Drop.
D2922-71(1976)	Density of Soil and Soil-Aggregate in Place by Nuclear Methods (Shallow Depth).

1.3 American Water Works Association (AWWA) Publications:

C600-66	Installation of Cast Iron Water Mains.

2. QUALITY CONTROL: Approvals, except those required for field installations, field applications, and field tests, shall be obtained before delivery of materials or equipment to the project site.

3. SUBMITTALS:

3.1 Certified Laboratory Test Reports: Before delivery of materials, certified copies in triplicate of the reports of all tests required herein under materials and in referenced publications shall be approved by the Contractor Quality Control representative and submitted to the Contracting Officer for record purposes. The testing shall have been performed in an independent laboratory approved by the Contracting Officer. Additional testing shall be submitted when the source of materials is changed. Certified test reports are required for the following:

(1) Capillary water barrier
(2) Fill for drains
(3) Bedding material
(4) Fill and backfill
(5) Embankment material

3.2 Dewatering Plan: See requirements for dewatering in paragraph 9.1.1.

4. DELIVERY AND STORAGE: Materials shall be delivered and stored in a manner to prevent contamination and segregation.

5. GENERAL REQUIREMENTS: Bids shall be based on the following:

(1) That the surface elevations are as indicated.
(2) That no pipes or other artificial obstructions, except those indicated, will be encountered.
(3) That the character of the material to be removed is as indicated.
(4) That ground water elevations indicated are those existing at the time subsurface investigations were made and do not necessarily represent permanent ground water elevation.

In case the actual conditions differ substantially from those stated or shown, the provisions of the contract respecting an adjustment for changed conditions shall apply, subject to the requirements of notification thereunder being given.

6. ENVIRONMENTAL PROTECTION: All work and Contractor operations shall comply with the requirements of section entitled: ENVIRONMENTAL PROTECTION.

7. MATERIALS:

7.1 Granular Fill:

7.1.1 Capillary water barrier indicated as crushed stone under concrete floor slabs and areaways shall consist of clean crushed stone, crushed gravel, or uncrushed gravel, 90-100 percent passing a 3/4-inch sieve and 0-5 percent passing a No. 4 sieve with a sand equivalent of not less than 50. The capillary water barrier shall be placed directly on filter fabric over the subgrade. The barrier shall be constructed in layers not exceeding 4 inches in compacted thickness, and each layer shall be compacted with a minimum of two passes of a hand-operated plate type vibratory compactor.

7.1.2 Fill for subdrain systems shall consist of clean stone or gravel and shall conform to the above requirements for capillary water barrier.

7.1.3 Decorative Stone: Decorative stone shall consist of a clean, smooth, round stone or gravel, 3/4-inch to 1-inch in size, and running from brownish to gray in color.

7.2 Soil Materials:

7.2.1 Soil materials used as backfill for trenches, drains and for structures shall consist of native materials classified in MIL-STD-619 as SC, SM, CL and SP which are free from debris, roots, wood, scrap materials, and other vegetable matter and refuse.

7.2.2 Soil materials used as fill in fills, under spread footings, and concrete slabs on grade which are not pile supported shall consist of materials classified as SC, SM, CL and SP by MIL-STD-619, and shall conform to the following: liquid limit shall not exceed 50 when tested in accordance with ASTM D423; plasticity index shall not be greater than 20 when tested in accordance with ASTM D424; no more than 25 percent by weight shall be finer than No. 200 sieve when tested in accordance with ASTM D1140. Materials classified as PT, OH, OL, and CH by MIL-STD-619 shall not be permitted.

7.2.3 Topsoil which is to be stripped and stockpiled shall be free of subsoil, refuse, stumps, rocks over one-inch, brush, weeds and other materials detrimental to plant growth.

7.3 Rip-Rap: Stone for rip-rap shall consist of field stone or rough unhewn quarry stone. The stone shall be sound, tough, dense, resistant to the action of air and water, and suitable in all other respects for the purpose intended. Where broken concrete from demolished structures or pavement is available, it may be used in place of stone provided that such meets the requirements herein. However, the use of broken concrete which contains reinforcing steel will not be permitted. The stone or broken concrete shall vary in weight from 5 to 200 pounds. At least 30 percent of the total weight of the rip-rap shall be in individual pieces weighing a minimum of 60 pounds each. Not more than 10 percent of the total weight of the rip-rap may be individual pieces weighing less than 15 pounds each.

7.4 Filter Fabric: Filter fabric shall be spunbonded polyester or polypropylene fabric and woven polyvinylidene chloride fabric. The following materials equal the requirements of this specification:

Advance Construction Specialties, "Laurel Erosion Cloth", Type 1.
Carthage Mills, "Filter-X".
Celanese Fibers Marketing Company, "Mirafi 140".
Dupont Company, "Typar" 3401.
Monsanto, "Bidrin" C38.

8. **REQUIREMENTS:**

"8.1x Clearing: All trees, stumps, logs, shrubs, and brush within clearing limits and rights-of-way, including clearing for utilities shall be removed. All merchantable timber 6 inches in diameter at the base and larger shall remain the property of the Government and shall be cut into 16'-6" lengths and stored on the site where directed by the Contracting Officer. The timber shall be cut between 2 to 3 feet above grade. The smallest diameter of the log shall be 4 inches at the top. Stumps shall be removed entirely. Roots and matted roots shall be grubbed out to at least 18 inches below the existing surface. Brush, refuse, stumps, roots, and unmerchantable timber shall be disposed of in the Base Landfill which is located within 10 miles from the site of the work. Cut merchantable timber shall be stockpiled within access of contractor roads and not in conflict with new construction. Cut merchantable timber will be removed by the Government within 180 calendar days after completion of all clearing operations. The Government shall be allowed to use Contractor access roads to remove cut merchantable timber."

"Burning of combustible material is permitted on site."

8.2 Selective Clearing:

8.2.1 Selected living trees, undesirable living undergrowth, and debris and dead, partially dead, or broken vegetation shall be removed from within the indicated areas and satisfactorily disposed of in the base landfill which is located within 10 miles from the site of the work.

8.2.2 The trees to be removed shall be those designated by the Contracting Officer.

8.2.3 All plants less than 4 inches in diameter, measured at a height of 4 feet 6 inches above the ground, shall be classified as undergrowth. All undergrowth shall be removed, except for those plants designated by the Contracting Officer.

8.2.4 All trees and undergrowth that are removed shall be cut flush with the ground. Stumps shall be treated with a herbicide immediately after cutting to prevent sprouting.

8.2.5 All logs, stumps, snags, loose roots, down timber, slabs, tree laps, lumber, dead or partially dead trees, broken trees or brush, dead brush, sawdust piles, discarded fences, leaf piles, and other debris shall be removed. All dead trees, stumps, snags, broken or partially dead trees, and brush shall be cut flush with the ground. Stumps of partially dead or broken vegetation shall be treated with a herbicide immediately after cutting to prevent sprouting. Cleanup and completion of the project shall be removed prior to final acceptance. Hand raking of areas or removal of normal leaf layer will not be required.

8.2.6 The Contractor shall follow all applicable instructions, warnings, and safety precautions stated on the manufacturer's label, and shall comply with all laws and regulations governing herbicides that are in effect at the time of use.

8.2.7 The Contractor shall conduct his operations in such a manner to prevent injury to trees, shrubs, grass or legume ground cover, or other types of vegetation that are to remain growing. When any such injuries to trees or shrubs occur, broken branches shall be removed and rough edges of scarred areas shaped and made smooth in accordance with generally accepted horticultural practice. All scarred areas and cut surfaces more than 1 inch in diameter shall then be thoroughly covered with tree paint. Any plants that are damaged to such an extent as to destroy their value for landscape purposes shall be cut and disposed of as directed by the Contracting Officer, and grass or legume ground cover that is damaged shall be reseeded and remulched as necessary at the Contractor's expense.

~~8.3 Topsoil: Existing topsoil shall be stripped to a depth of 4 inches, stockpiled separately from other excavated materials, and shall be reused for finished surface grading. Topsoil shall be free of stones, wood matter,~~

"8.3x Topsoil: Existing topsoil shall be stripped to a depth of 4 inches, stockpiled separately from other excavated materials, and shall be reused for finished surface grading. Topsoil shall be free of stones, wood matter, cuttings, excessive quantities of vegetation, and debris of every kind. Piles of topsoil shall be located so that the material can be used readily for finished surface grading; topsoil shall be protected and maintained until needed. The top 4-inch thickness of all newly graded earth surfaced areas shall consist of topsoil. Topsoil required in excess of that available from excavations and grading shall be provided by the Contractor from sources outside the station, and shall conform to the requirements for topsoil in the section entitled "Establishing Vegetation". Placing of topsoil is specified in the section entitled "Establishing Vegetation"."

8.4 **Excavations:** Excavations shall be carried to the contours and dimensions indicated or necessary. Excavations shall be kept free from water while construction therein is in progress. In the event that it is necessary to remove soft or weak soil to a depth greater than indicated, the Contracting Officer shall be notified and an adjustment in the contract price will be considered in accordance with the contract. Excavations carried below the depths indicated, without specific directions from the Contracting Officer, shall, except as otherwise specified, be refilled to the proper grade with granular material and compacted to at least 98 percent of ASTM D698 density. All additional work of this nature shall be at the Contractor's expense. Soil disturbed and weakened by the Contractor's operations, or soils permitted to soften from exposure to weather shall be excavated and replaced with granular material compacted to 98 percent of ASTM D698 density. All additional work of this nature shall be at the Contractor's expense.

8.4.1 Excavations for Structures: In excavations for spread footings carried below the depths indicated without specific directions from the Contracting Officer, the concrete shall be extended to the bottom of the excavations; all additional work of this nature shall be at the Contractor's expense.

8.4.2 Excavation of Pipe Trenches: Excavation shall be to grade unless otherwise directed in the event of poor soil or excavation in rock. Width of trench shall be as shown on the Standard Pipe Trench Bedding details accompanying this section. Compaction of soil in the backfilling operation shall be as specified herein.

8.4.3 Excavations for Fill and Under New Pavements and Concrete Slabs: The original ground under fills and under new pavements and concrete slabs shall be excavated to remove vegetable matter, sod, topsoil, muck, and rubbish to a minimum depth of 12 inches and to remove any weak soil disturbed by the Contractor's operations or softened by exposure to the elements and water. In the event that the Contractor is directed by the Contracting Officer to remove such unsuitable material to a greater depth than specified, an adjustment in the contract price or time for completion, or both, will be made in accordance with the contract. On slopes, the area under fills shall be scarified, after removal of such unsuitable material, and the first layer of fill material shall be keyed by scarifying securely to the existing material.

8.4.4 Shoring and Sheeting: Excavations shall be shored and sheeted with members of sizes and arrangement sufficient to prevent injury to persons, damage to structure, injurious caving, or erosion. Shoring, sheeting, and bracing shall be removed as the excavations are backfilled; care shall be exercised to prevent injurious caving during the removal of the shoring and/or sheeting.

8.5 Borrow Materials: Borrow materials shall be obtained from the station borrow pit or from sources outside the station, at the Contractor's option. The station borrow pit is located within a haul distance of 10 miles from the site of the work. If the station borrow pit is used, the Contractor, at his expense, shall perform any clearing, grubbing, and stripping required for providing access to suitable borrow material and shall dispose of materials from clearing and grubbing operations off the station. The Contractor, at his expense, shall also remove and stockpile the top 12 inches of soil material in the area in which he is to get the borrow. After the borrow material has been removed, the borrow pit shall be trimmed neatly and graded to drain properly and the stockpiled soil material replaced and leveled over the borrow area. If the borrow materials are provided from sources outside the station, they shall be at the Contractor's expense.

8.6 Filling and Backfilling:

8.6.1 Backfilling for Structures and Trenches: Backfill shall be placed in layers not more than 6 inches thick, and each layer shall be compacted to at least 95 percent of ASTM D698 density. Backfill adjacent to structural elements shall be placed, as far as practicable, as the adjacent structural elements have been completed and accepted. Backfilling against concrete shall be done only when directed by the Contracting Officer. Backfilling of trenches shall progress as rapidly as the construction, testing, and acceptance of the work permits. In backfilling pipe trenches, fill shall be compacted in 6-inch layers to a depth of one foot over the top of the pipe; the remainder of the trench shall be backfilled and compacted as specified under compaction.

8.6.2 Fill Materials for Fills: Fill under spread footings, and for concrete slabs on grade shall be placed in lifts no greater than 10 inches and each lift shall be compacted as specified herein, before the overlaying lift is placed. In all areas not accessible to rollers or compactors, the fill shall be compacted with mechanical hand tampers. If the mixture is excessively moistened by rain, it shall be aerated by means of blade graders, or harrows until the moisture content of the mixture is satisfactory. The surface of the layer shall be finished by blading or rolling with a smooth roller, or a combination thereof, and shall be smooth and free from waves and inequalities.

8.7 Compaction:

8.7.1 For other than primary roads and Helipad pavement, the subgrade of soils in cut shall have a density of at least 95 percent of the maximum density in accordance with the requirements of ASTM D698 to a depth of 12 inches below the subgrade surface. If the density of the existing material is less than 95 percent, it shall be compacted to a depth of 12 inches to the minimum 95 percent density. Fill and/or backfill under concrete floor slabs and under paved areas shall be compacted to not less than 98 percent of the maximum density; other backfill adjacent to and not supporting any structural elements to at least 90 percent. The upper 12 inches of trenches shall be compacted to at least 95 percent of ASTM D698.

8.7.2 Primary Roads and Helipad Pavement: The subgrade of soils in cut shall have a density of at least 100 percent of the maximum density in accordance with the requirements of ASTM D698 to a depth of 12 inches below subgrade surface. If the density of the existing material is less than 100 percent, it shall be compacted to a depth of 12 inches to the minimum 100 percent density. Fill and/or backfill under primary roads and helipad pavements shall be compacted to not less than 100 percent of the maximum density.

8.8 Grading: The Contractor shall perform all grading in the areas so indicated. Fill shall be brought to finished grades indicated within one-tenth of a foot and shall be graded to drain water away from structures. Existing grades which are to remain and which are disturbed by the Contractor's operations shall be graded to provide surfaces suitable for the proper use of mowing machines. Grades under areas to receive topsoil shall be brought to acceptable elevation.

8.9 Disposition of Surplus Material: Surplus material not required for filling, backfilling, or grading and other soil material shall be wasted by deposition on the station in the area designated by the Contracting Officer, and the wasted material shall be spread and leveled. The disposal area is located within a haul distance of 10 miles from the site of the work.
Landfill

9. DEWATERING:

9.1 Dewatering During Construction: Dewatering shall include the control of all forms of surface and subsurface water that may be encountered in the course of construction.

9.1.1 The Contractor shall familiarize himself with site conditions, surface and subsurface, together with all available soil and hydrological data and, based on this information, together with the dewatering requirements as hereinafter specified, shall prepare a complete dewatering plan describing the basic components of the dewatering system he proposes to use for the work. The dewatering plan shall be submitted to the Contracting Officer for

approval. Approval of this dewatering plan will only be with respect to the basic principals and methods that the Contractor intends to employ. Acceptance of the dewatering system will be based on demonstrated performance of the requirements contained herein.

9.1.2 All excavation, construction and backfilling shall be performed under workably dry conditions. Prior to any excavation below ground water level the dewatering system shall be installed and placed into operation in order to lower the water levels at least 3 feet below the bottom and side slopes of the excavation. In the event of layered soils the hydrostatic head in previous zones below the subgrade elevation shall be relieved in order to prevent uplift.

9.1.3 The dewatering system shall be operated continuously, 24 hours per day, 7 days per week until such time as all construction work below normal water level is complete, unless notified to the contrary by the Contracting Officer, in which case the provisions of the contract respecting an adjustment for changes shall apply, subject to the requirements for notification thereunder being given.

9.1.4 The selection of size and spacing and type of dewatering equipment shall be the responsibility of the Contractor, subject to the approval of the Contracting Officer.

9.1.5 Dewatering devices shall be adequately filtered to prevent the removal of fines from the soil. Should the pumping system draw fines from the soil, the Contracting Officer will order immediate shut-down and remedial measures will be the responsibility of the Contractor.

9.1.6 Upon completion of the dewatering work the Contractor shall remove all equipment and leave the construction area in a neat, clean and acceptable condition.

9.2 Dewatering Performance: Performance of the dewatering system shall be measured by suitable observation wells or piezometers installed in conjunction with the dewatering system and these are to be read at least daily. The Contractor Quality Control Representative shall maintain a log of these readings and submit them to the Contracting Officer.

10. INSTALLING FILTER FABRIC: The plastic filter cloth shall be placed in the locations indicated on the drawings. The surface to receive the cloth shall be prepared to a relatively smooth condition free of obstructions, depressions, and debris. The cloth shall not be laid in a stretched condition but shall be laid loosely with the long dimensions parallel. The panels shall be overlapped a minimum of 24 inches and secured with securing pins inserted through both layers at not greater than 5 foot intervals along a line through the approximate midpoint of the overlap. Securing pins shall be placed along a line approximately 2 inches from the edge of the outer limits of the completed filter cloth area at intervals of not greater than 5 feet. Additional pins shall be installed as necessary to prevent any slippage of the

filter cloth, regardless of location. Each securing pin shall be inserted through the cloth until the washer bears against the cloth and secures it firmly to the foundation. End overlap shall be staggered a minimum of 5 feet. Stone shall not be dropped on the cloth from a height greater than 4 feet. Plastic filter cloth damaged or displaced before or during installation or during placement of overlaying layers of stone shall be replaced or repaired.

11. FIELD SAMPLING AND TESTING:

11.1 Sampling: All sampling shall be conducted by the Contractor at his expense. A 50 lb. sample of granular fill shall be taken from capillary water barrier at least once daily for sieve analysis of aggregate. Duplicate samples shall be provided to the Contracting Officer on an average of 5 samples a week. The duplicate sample shall be taken at the same time and in the same manner and shall bear the same sample number of identification prefixed with G.

11.2 Sample Identification: Each sample shall be contained in a clean container which shall be securely fastened to prevent loss of material. Each sample shall be tagged for identification. The tag shall contain the following information:

Contract No. _____.
Sample No. _____.
Date of Sample _____.
Sampler _____.
Source _____.
Intended Use _____.
For Testing _____.

11.3 Testing: All testing shall be conducted by the Contractor Quality Control Representative as specified herein at the expense of the Contractor.

11.3.1 Granular Fill Testing: Gradation test shall be made on each sample in accordance with ASTM C136.

11.3.2 Soil materials shall be tested for liquid limit in accordance with ASTM D423, plasticity index in accordance with ASTM C424, material finer than No. 200 sieve in accordance with ASTM C1140. One test shall be performed for each 1,000 cubic yards of material used or fraction thereof and whenever the source is changed.

11.3.3 Compaction Testing: Compaction shall be made in randomly selected locations in accordance with ASTM D1556 or ASTM D2922 as follows:

Materials	Test Frequency
(1) Fill and Backfill	1 per lift per 2000 sq. ft.
(2) Subgrade (existing in-place density)	1 per lift per 2500 sq. ft.

---END---

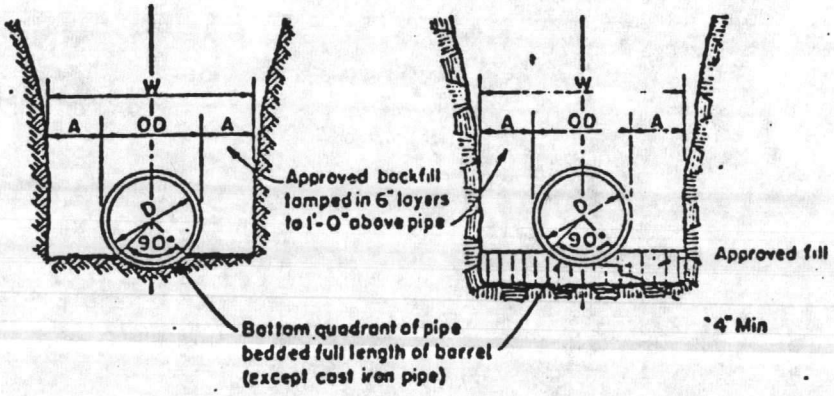

TRENCH IN EARTH TRENCH IN ROCK

PIPE DIA "D"	MAXIMUM "A"
6" to 15"	8"
18" to 21"	10"
24" to 30"	12"
33" to 42"	15"
48" & Larger	18"

Maximum trench width "W" taken at top of pipe

STANDARD PIPE TRENCH BEDDING

LANTDIV PLATE

05-77-7526
02200-11

SECTION 02250. SOIL TREATMENT FOR TERMITE CONTROL

1. QUALITY CONTROL: Approvals, except those required for field installation, field application and field tests, shall be obtained before delivery of materials to the project site.

1.1 Samples: One sample of concentrated toxicant delivered to job shall be tested. One sample of working solution shall be tested for each 10,000 square feet of treated area, but there shall be at least two samples taken.

1.2 Testing: Samples shall be taken and tested by an approved independent testing laboratory retained and paid by the Contractor. Written reports of test results shall be submitted to the Contracting Officer.

1.3 Certification: Upon final completion of the soil treatment, and as a condition for final acceptance, the Contractor shall furnish a written certificate stating:

(1) Chemical used had at least the minimum required concentration, type of chemical, and manufacturer thereof.

(2) Rate and method of application complied in every respect with the standards contained herein.

1.4 Qualifications: All work shall be done by a bonded Contractor whose principal business is pest control and anti-termite soil treatment, and who can show evidence of at least five years of successful operation in his field. Evidence of such qualifications shall be submitted for approval to the Contracting Officer prior to beginning any of the work.

2. DELIVERY AND STORAGE: Toxicants shall be delivered to project site in sealed and labeled containers as supplied by manufacturer or formulator. Lables shall bear manufacturer's warnings to be observed in handling and use of material. Labels shall bear evidence of registration under the Federal Insecticide, Fungicide, and Rodenticide Act.

3. MATERIALS: The toxicant shall be one of the following water-based emulsions, uniform in composition throughout, containing a dye which will be readily discernible to the eye after application to the soil, and containing in concentration by weight:

(1) Chlordane, 1.0 percent; or
(2) Dieldrin, 0.5 percent; or
(3) Aldrin, 0.5 percent; or
(4) Heptachlor, 0.5 percent

4. REQUIREMENTS: The work includes the procurement of toxicant chemicals and their application to all soil and earth-type material which will be covered by or lie immediately adjacent to all new buildings so as to provide a lethal barrier to subterranean termites.

5. APPLICATION:

5.1 General: At the time soil treatment is to be applied, the soil to be treated shall be in a friable condition with a sufficiently low moisture content to allow uniform distribution of the soil treatment agent throughout the soil. Application shall not be made immediately after heavy rains. Toxicant shall be applied as a coarse spray and in such manner as to provide uniform distribution of the toxicant on the soil surface. Toxicant shall be applied at least 12 hours prior to placement of concrete which will be in contact with treated material. Toxicant shall be applied immediately prior to placement of vapor barrier or waterproof membrane. Where treated soil or fill material is not to be covered with a vapor barrier or waterproof membrane, adequate precautions shall be taken to prevent its being disturbed. Where soil or fill material is disturbed after treatment and before placement of slabs or other covering structures, it shall be retreated as hereinafter specified for treatment. Treatment of the soil on the exterior sides of foundation walls, grade beams, and similar structures shall be coordinated with final grading and planting operations so as to avoid disturbance of the toxicant barriers by such operations. Manufacturer's warnings and precautions shall be observed in the handling and use of soil toxicants. Care shall be taken that these chemicals do not enter project water supply system, and that they do not endanger animals.

5.2 Slabs on Grade: Areas to be covered by concrete slabs on grade shall be treated at a rate of not less than 1-1/2 gallons per 10 square feet as an overall treatment. Treatment shall be done before placement of granular fill used as capillary water barrier, but after placement of compacted fill material. Additional treatment shall be applied as follows:

(1) In critical areas such as around utility openings for pipes, conduits, and ducts, 0.5 gallon per square foot in a strip 6 inches wide; and

(2) Along the exterior perimeter of the slab and under expansion joints, 2 gallons per 5 linear feet in a strip one foot wide in shallow trench.

5.3 Foundation and Basement Walls and Grade Beams: Soil and fill material adjacent to exterior sides of all walls and grade beams shall be treated in a strip not less than 12 inches wide extending to 3 feet below grade or to top of footing or base of grade beam whichever is the lesser depth. Toxicant shall be applied at the rate of 4 gallons per 5 linear feet with one-third of the application near level of bottom of trench, top of footings, or base of grade beams before any backfill is placed; one-third when half of the backfill is placed; and the remainder when the trench is virtually filled. Following each application, the soil and the toxicant shall be well mixed to assure even distribution of the toxicant in the soil. Backfill shall be tamped and sufficient in quantity to provide a surface sloping away from the structure. Where tops of unit masonry foundation walls come at or just

above grade level, voids in units shall receive additional treatment of not less than 2 gallons of toxicant per 5 linear feet. Additional treatment of 0.5 gallon per square foot shall be applied for 6 inches around utility openings in walls.

5.4 Foundations of Structures with Crawl Spaces: Soil and fill material adjacent to all sides of foundation walls, grade beams, and isolated piers shall be treated in a strip not less than 12 inches wide extending to 3 feet below grade or to top of footing or pier or base of grade beam, whichever is the lesser depth. Toxicant shall be applied at the rate of 2 gallons per 5 linear feet, per foot of depth, with one-third of the application near level of bottom of trench, top of footings or piers, or base of grade beams before any backfill is placed; one-third when half of the backfill is placed; and the remainder when the trench is virtually filled. Following each application, the soil and the toxicant shall be well mixed to assure even distribution of the toxicant in the soil. Backfill shall be tamped and sufficient in quantity to provide a surface sloping away from the structure. Where tops of unit masonry foundation walls come at or just above grade level, voids in units shall receive additional treatment of not less than 2 gallons of toxicant per 5 linear feet. Additional treatment of 0.5 gallon per square foot shall be applied for 6 inches around utility openings in walls.

---END---

SECTION 02312. PRESTRESSED CONCRETE PILING

1. APPLICABLE PUBLICATIONS: The following publications of the issues listed below, but referred to elsewhere by basic designation only, form a part of this specification to the extent indicated by the references thereto:

1.1 American Society for Testing and Materials (ASTM):

A82-76	Cold-drawn Steel Wire for Concrete Reinforcement.
A416-74	Uncoated Seven-wire, Stress-relieved Strand for Prestressed Concrete.
C494-77	Chemical Admixtures for Concrete.
D1143-74	Testing Piles under Axial Compressive Load.

1.2 American Association of State Highway Transportation Officials and Prestressed Concrete Institute (AASHTO-PCI):

Standard Prestressed Concrete Piles.

2. QUALITY CONTROL: Approvals, except those required for field installations, field applications, and field tests, shall be obtained before delivery of materials or equipment to the project site.

2 1 Materials Tests and Test Reports: The testing requirements for materials incorporated in referenced documents will be waived provided the manufacturer submits certificates stating that previously manufactured materials have been tested by recognized laboratories, that such materials meet testing requirements specified, and that the materials furnished for this project are of the same type, quality, manufacture and make as that tested. Copies of the test reports need not be submitted except as specifically requested by the Contracting Officer.

2.1.1 Sample Certificate: The certificate shall not contain statements that could be interpreted to imply that the proposed material does not meet all requirements for the specified material, i.e.; "as good as"; "achieve the same end use and results as materials formulated in compliance with the specified material"; "exceed or equal service and performance for specified material". The certificate should be simple and should state only that the proposed material meets the requirements for the specified material.

SAMPLE CERTIFICATE

The manufacturer hereby certifies that previously manufactured materials have been tested by recognized laboratories, that the tested material is of the same type, quality, manufacture and formulation as that furnished for this project, and that the tested material meets all the requirements of the following specifications:

SPECIFIED MATERIAL	TESTED MATERIAL
C150-74	John Doe Company Portland Cement

SIGNATURE AND TITLE

2.2 Concrete Work: The Quality Control provisions of the section entitled "Cast-In-Place Concrete" shall apply to concrete under this section.

2.3 Pile Records: Within 15 days after completion of the pile driving, a complete and accurate record of all piles installed shall be furnished to the Contracting Officer. The record shall indicate the pile location, cross section shape and dimensions, length, the elevation of tips and butts of piles, pile hammer description, and the number of hammer blows per foot for the entire length of penetration.

3. GENERAL REQUIREMENTS: Prestressed piles shall be 12 inch square pretensioned concrete piles. Where the cut-off elevation for piles is below existing grade, the excavation for foundation or other construction is required at the location of the piles, the excavation shall be made before the piles are driven.

4. MATERIALS:

4.1 Concrete: Concrete materials shall conform to the section entitled "Cast-In-Place Concrete", as modified herein. Concrete mix design shall be Contractor-furnished. The mix shall produce concrete having an ultimate compressive strength of 5000 pounds per square inch at 28 days, with a maximum aggregate size of one inch. Cement shall be Type I, Type II, or Type III cement.

4.2 Steel: Prestressing steel shall be seven-wire strand conforming to ASTM A416 as modified herein. Except as otherwise provided herein, ultimate breaking strength shall be 270,000 pounds per square inch. All prestressing steel shall be free of grease, oil, wax, paint, soil, dirt, and loose rust. The use of prestressing strands having kinks, bends, nicks, or other defects will not be permitted. Steel for spirals shall conform to ASTM A82.

4.3 Admixtures: When required to retard the setting of the concrete, a retarding admixture conforming to ASTM C494 shall be used at no additional cost to the Government. Admixtures containing chlorides shall not be used, and the Contractor shall furnish certification that admixtures used are free of chlorides.

5. CONSTRUCTION:

5.1 General: Piles shall be manufactured by an approved method. Workmanship shall conform to standard commercial practice in modern prestressing plants. Pile pick-up points shall be where indicated. Unless special lifting devices are attached for pick up, pick-up points shall be plainly marked on all piles after removal of the forms, and all lifting shall be done at these points. The use of special embedded or attached lifting devices, the employment of other pick-up points or any other method of pick-up shall be subject to approval. Piles shall be lifted by a suitable bridge or sling attached at the pick-up points. Piling shall not be driven until the concrete attains a compressive strength of not less than 5000 pounds per square inch as indicated by breaking test cylinders.

5.2 Forms: Forms shall be of metal and shall be well braced and stiffened against deformation, shall be accurately constructed, shall be watertight, and shall be supported on unyielding casting beds. Forms shall permit movement of the pile without damage during release of the prestressing force. Bottom of the form shall be within 1/4 inch of a true plane in a length of 50 feet.

5.3 Concrete Work: Concreting methods shall be in accordance with the section entitled "Cast-In-Place Concrete", as modified herein. Concrete shall not be deposited in the forms until the placement of reinforcement and anchorages has been inspected and approved. Care shall be taken to produce straight piles with smooth surfaces of dense concrete and to retain the steel in its proper position. Concrete shall be placed promptly after mixing is completed and shall be deposited close to its final position in the form. Vibrator heads shall be smaller than the minimum distance between steel for pretensioning. The plane of the heads of the piles shall be perpendicular to the axis of the pile. The ends of all piles and the corners of square piles shall be chamfered not less than 1/2 inch. Not less than three test cylinders shall be prepared at the time the concrete is deposited for each production line to determine the strength of the casting at different areas. The cylinders shall be cured in the same manner as the piles and shall be placed at the point where the poorest curing conditions are offered. This is at the coolest point in the bed for steam curing. Sides of forms shall not be removed until the concrete has attained a compressive strength of eight-tenths of the specified minimum ultimate compressive strength of the pile.

5.4 Curing: Curing of piles shall be in accordance with the section entitled "Cast-In-Place Concrete", except as specified otherwise herein. Prior to the start of curing operations, the method and details of curing proposed shall be submitted for approval of the Contracting Officer. All concrete shall be moist cured for a minimum of 21 days, except concrete which is steam cured in accordance with the requirements specified hereinafter. Piles shall not be moved, handled, prestressed, or otherwise subjected to stress during the entire curing period. Steam curing of prestressed concrete piles may be used provided the piles are kept continuously moist until the prestressing force transfer as specified hereinafter has been done, and

provided that the requirements for steam curing in the section entitled "Cast-In-Place Concrete" are complied with. The casting bed for any piles cured with steam shall be enclosed completely with a suitable enclosure to minimize moisture and heat losses.

5.5 Prestressing: Anchorages for tensioning the prestressing steel shall be suitable for the prestressing operations. The tension to which the steel is to be prestressed shall be measured by the elongation of the steel and verified by the jack pressure reading on a calibrated gage. Means shall be provided for measuring the elongation of the steel to at least the nearest 1/8 inch. When the difference between the results of measurement and gage reading is more than 5 percent, the cause of the discrepancy shall be corrected. The tensioning steel shall be given a uniform prestress prior to being brought to design prestress. Initial and design prestress shall be as indicated. Pretension in the strands shall be released from the anchorage gradually and simultaneously. The transfer of prestressing force shall be done when the concrete has reached a compressive strength of not less than eight-tenths of the specified minimum compressive strength. The same initial prestress shall be induced in each unit when several units of prestressing steel in a pile are stretched simultaneously.

6. LENGTHS AND NUMBERS OF PILES: Bids shall be based on providing 2500 piles totalling 100,095 linear feet and on the assumed pile lengths of 40 feet for standard job piles and of length specified in paragraph entitled "Test Piles" for special test piles, all piles measured from point to cut-off elevation. Except for piles required to be driven to bedrock, or when definite lengths of piles are shown on the drawings, the Contracting Officer will determine from soil borings and from the results of test pile driving and loading the minimum depth and/or minimum driving resistance required for job piles. From these requirements and from the data obtained as a result of the test pile driving and loading, the Contractor shall prepare a schedule of the number of piles of each length to be used and their location. This schedule shall be approved before any piles, except test piles, are ordered. The Government reserves the right to take up to 3 working days to establish minimum pile depths from the time test pile records and load test data, where specified, are in possession of the Contracting Officer, and 3 working days to review and approve the Contractor-prepared schedule of pile lengths and locations.

7. TEST PILES: 53 prestressed concrete test piles conforming to the requirements for permanent piles shall be driven at the locations indicated and to the depths as follows:

Test Pile No.	Ordered Pile Length (feet)	Tip-To-Cut-Off Length (feet)
1	44	39
2	44	39
3	44	39
4	44	39
5	44	39
6	44	39
7	44	39
8	44	39
9	44	39
10	44	39
11	44	39
12	44	39
13	43	38
14	43	38
15	47	42
16	43	38
17	58	53
18	43	38
19	43	38
20	43	38
21	58	53
22	43	38
23	43	38
24	43	38
25	34	29
26	43	38
27	43	38
28	32	27
29	34	29
30	46	41
31	34	29
32	34	29
33	46	41
34	34	29
35	48	43
36	42	37
37	44	39
38	48	43
39	44	39
40	46	41
41	46	41
42	46	41
43	34	29
44	34	29
45	34	29
46	34	29
47	32	27
48	46	41
49	32	27
50	44	39
51	36	31
52	33	28
53	34	29

NOTE: Pile Nos. 1, 2, and 3 are load test piles unless otherwise directed by the Contracting Officer.

For each test pile, a record shall be kept of the number of blows required for each foot of penetration. The piles and pile driving shall conform to the requirements specified herein and, unless directed otherwise by the Contracting Officer, driving shall be continuous until the tip of the pile has been driven to the design depth below cut-off elevation indicated. Any or all of the additional five feet of test pile should be driven only at the direction of the Contracting Officer when the capacity at design penetration is seriously in doubt. Jetting of test piles will not normally be permitted. Test piles indicated or directed to be driven in permanent locations may be incorporated into the work if they are approved by the Contracting Officer after all testing has been completed. If jetting is authorized by the Contracting Officer for job piles, at least two test piles must be placed in the same manner.

7.1 Load Tests: Upon completion of driving of all test piles, 3 test piles selected by the Contracting Officer shall be load tested. Every facility shall be provided for the Contracting Officer to inspect and measure the deflection or settlement of a pile under test load. Furnishing and setting up of the measuring equipment and the loading of the test piles shall be the responsibility of the Contractor and conducting the test will be the responsibility of the Contracting Officer. The loading equipment shall be of sufficient capacity to apply a maximum load of not less than 120 tons. Test loading shall be in accordance with ASTM Method of Test D1143. Test piles to be load-tested shall be loaded to two times the design working capacity of the pile. Load test piles to 100% design capacity and rebound using increments of 25%. Then apply the ultimate test load and maintain for not less than 24 hours. Release the load in 25% increments. The safe design capacity of a test pile as determined from the results of load tests shall be the lesser of the two values computed according to the following:

(a) The load at which the plastic deformation is no greater than 0.01 inch of deflection per ton as determined from the load-settlement curve.

(b) One-half the load that causes a gross settlement of one-inch provided the load-settlement curve shows no sign of failure.

8. BEARING POWER: Design capacity for piles is 60 tons. The following formulae are presented only as a guide to aid in establishing the controlling penetration per blow which, together with the minimum depth of penetration established above will serve to determine the required depth of penetration of each individual pile:

$R = \frac{2E}{S + 0.1}$ for double-acting hammers;

$R = \frac{2WH}{S + 0.1}$ for single-acting hammers;

in which R is the approximate allowable pile load in pounds; E equals the energy in foot-pounds per blow based on an acceptable certified statement from the manufacturer of the hammer; W equals the weight of the hammer or ram in pounds; H equals the fall of the hammer or ram in feet; and S equals the average inches of penetration per blow for the last ten blows. Water jets may be used in driving only when specifically authorized by the Contracting Officer, and he may require their use where satisfactory penetration cannot be obtained otherwise. Where jetting is required, the jetting equipment shall be of a type and capacity approved by the Contracting Officer. All jetted piles shall be driven the last five feet of the required depth or penetration and the minimum number of blows per foot required by the Contracting Officer for normally driven piles must be attained. Prejetting of piles will not be permitted under any circumstance.

9. DRIVING: Piles shall be driven with an approved diesel, air or steam hammer. In jetting a pile, the jetting shall be discontinued 5 foot minimum before the final bearing elevation is reached and the pile shall be brought to final bearing elevation with the hammer. All piles shall be spaced accurately and shall be driven plumb. Driving of each pile shall be continuous until minimum bearing is attained. They shall have the heads and points squared to the driving axis. All damaged piles shall be replaced with sound piles or shall have the damaged parts repaired as directed by the Contracting Officer; without additional cost to the Government.

9.1 Pile Hammers: The hammer furnished shall have a capacity at least equal to the hammer manufacturer's recommendation for the total weight of pile and character of subsurface material to be encountered. The required driving energy of the hammer shall be obtained by use of a heavy ram and a short stroke with low impact velocity, rather than a light ram and a long stroke with high impact velocity. The driving energy of the hammer shall be not less than 15000 foot-pounds, except that for piles weighing less than 400 pounds per foot, the hammer shall deliver not less than one foot-pound of energy per pound of pile; the hammer for heavier piles shall deliver not less than 30,000 foot-pounds of energy. The maximum driving energy shall not exceed that recommended by the manufacturer of the pile. Diesel-powered hammers shall be operated at the rate recommended by the manufacturer throughout the entire driving period. Sufficient pressure shall be maintained at the steam hammer so that: (1) for double-acting hammer, the number of blows per minute during and at the completion of driving of a pile is equal approximately to that at which the hammer is rated; (2) for single-acting hammer, there is a full upward stroke of the ram; and (3) for differential type hammer, there is a slight rise of the hammer base during each upward stroke. Hammers used for driving test piles and project piles shall be of the same type and rated capacity.

9.2 Protection of Piles: Care shall be taken to avoid damage to the piles in placing the pile in the leads and during the pile driving operations. Piles shall be laterally supported during driving, but shall not be unduly

restrained from rotation in the leads. Where pile or projecting reinforcement orientation is essential, special care shall be taken to maintain the orientation during driving. Special care shall be taken in supporting battered piles to prevent excessive bending stresses in the pile. The top of the pile shall be squared to the longitudinal axis of the pile. If the Contractor elects to use a pile head with projecting strands or mild steel reinforcing, a special driving head shall be used to prevent damage to the reinforcement and prevent direct impact forces from being transmitted through the reinforcement. The special driving head shall include a cushion block adequate to prevent the formation of cracks around the reinforcement during driving, in addition to the other requirements specified hereinafter.

9.3 Driving Helmets and Cushion Blocks: A driving helmet or cap including a cushion block or cap block of approved design shall be used between the top of the pile and the ram to prevent impact damage to the pile. The driving helmet or cap and cushion block combination shall be capable of protecting the head of the pile, minimize energy absorption and dissipation, and transmit hammer energy uniformly and consistently during the entire driving period. The driving helmet or cap shall fit loosely around the top of the pile so that the pile may rotate slightly without binding within the driving head. During the test pile period the Contractor shall demonstrate to the satisfaction of the Contracting Officer that the equipment to be used on the project performs the above functions. The cushion block may be a solid softwood block with the grain parallel to the end of the pile enclosed in a close-fitting steel housing. Plywood blocks are not acceptable. The thickness of block shall be suitable for the length of pile to be driven and the character of subsurface material to be encountered. The cushion block shall be replaced if it has been damaged, split, highly compressed, charred or burned, or has become spongy or deteriorated in any manner, or if driving has reduced the thickness of the block to 70 percent, or less, of the original block thickness. Under no circumstances will the use of small wood blocks, wood chips, rope, or other material permitting excessive loss of hammer energy be permitted. The Contractor shall submit to the Contracting Officer, at least two weeks before the start of test pile driving operations, detail drawings of the cushion block, including records of successful use. The type of cushion block used shall not be changed during pile driving operations unless detail drawings are submitted therefor and are approved by the Contracting Officer.

9.4 Tolerances in Driving: All piles shall be driven with a variation of not more than 0.25 inch per foot of pile length from the vertical for plumb piles or more than 0.50 inch per foot of pile length from the required angle for batter piles. Top of pile shall be within 4 inches of the location indicated. Manipulation of piles to force them into position will not be permitted. All piles will be checked for heave. Piles found to have heaved shall be redriven to the required point elevation.

10. BUILD-UPS: If, in driving pretensioned piles, the Contracting Officer determines that the pile length is insufficient so that the final elevation of the pile head is below the indicated cut-off elevation, the pile

section may be extended to the required elevation by means of a cast-in-place reinforced concrete build-up in accordance with the current edition of AASHTO-PCI standard drawings for "Prestressed Concrete Piles". Details of means for protecting the joints by a suitable mortar or epoxy shall be submitted by the Contractor. In no case shall the length of the build-up exceed 6 feet. Build-ups to be driven shall conform to the details of Build-up with Driving shown in the above standard drawings. Build-ups will not be permitted on more than 10 percent of the total number of piles. If this percent figure is exceeded, or if, in the judgement of the Contracting Officer, the clustered location of the build-ups is undesirable, piles of insufficient length shall be withdrawn and replaced with longer piles. Concrete in build-ups shall have a minimum ultimate compressive strength of 5000 pounds per square inch.

11. SPLICES: Splicing of piles will not be permitted, except as otherwise specified. Splices may be used in lieu of build-ups, subject to the approval of the Contracting Officer. The Contractor shall submit to the Contracting Officer, for approval, details of proposed splices, complete with load test results previously performed on similar splices.

12. PILE CUTTINGS: Cutting off piles shall be with pneumatic tools, sawing, or other approved means. The use of explosives for cutting will not be permitted.

13. PAYMENT: The requirements of Clause 54 of the General Provisions shall not apply to payment for piling. Each pile and test pile acceptably provided will be paid for at the bid unit price per linear foot, which price shall include all items incidental to furnishing and driving the piles including jetting or pilot piles, redriving uplifted piles, and cutting off all piles at the cut-off elevation. Payment will be made at the bid unit price for the length of pile, from point to final cut-off, excluding build-ups and splices directed by the Contracting Officer to be made, actually provided. Where the point to cut-off length is less than that calculated from the results of test pile driving and load-testing, payment for that portion of pile not driven will be made at 75 percent of the bid unit price and no other payment will be made for making the cut-off. Payment for build-ups will be made at 125 percent of the bid unit price. Payment for splices, as specified, will be made at 18 times the unit price per foot bid for piling. Should the actual pile length provided vary by more than 25 percent from that specified as a basis for bidding, at the direction of the Contracting Officer, the unit price per linear foot will be adjusted in accordance with the provisions of Clause 4 of the General Provisions. Piles required to be pulled at no fault of the Contractor will be paid for at the bid unit price for furnishing and driving pile in its original position plus 25 percent of this amount to cover the cost of pulling. Such pulled piles when redriven will be paid for at 25 percent of the bid unit price for the length driven. Payment for each acceptably provided complete test loading of a single pile will be made at the contract unit price per test, which price shall include furnishing, placing, and removing testing equipment, and placing and removing test loads. At the direction of the Contracting Officer, load tests may be waived at a credit to the Government of the unit price bid therefor.

---END---

SECTION 02501. STORM DRAINAGE SYSTEMS

1. APPLICABLE PUBLICATIONS: The following publications of the issues listed below, but referred to hereinafter by basic designation only, form a part of this specification to the extent required by the references thereto:

1.1 Federal Specifications:

RR-F-621B	Frames, Covers, Gratings, Steps, Sump and Catch Basin, Manhole.
RR-G-661C	Grating, Metal, Bar Type (Floor, Except for Naval Vessels).
SS-S-210A & Am 1	Sealing Compound, Preformed Plastic, for Expansion Joints and Pipe Joints.
WW-P-402C & Am 1	Pipe, Corrugated (Aluminum Alloy).
WW-P-405B & Am 1	Pipe, Corrugated (Iron or Steel, Zinc Coated).
WW-P-421D	Pipe, Cast Gray and Ductile Iron, Pressure.

1.2 American Society for Testing and Materials (ASTM):

A 74-72	Cast-Iron Soil Pipe and Fittings.
C 14-75	Concrete Sewer, Storm Drain, and Culvert Pipe.
C 32-73	Sewer and Manhole Brick (Made from Clay or Shale).
C 62-75a	Building Brick (Solid Masonry Units Made From Clay or Shale).
C 76-76	Reinforced Concrete Culvert, Storm Drain and Sewer Pipe.
C 139-73	Concrete Masonry Units for Construction of Catch Basins and Manholes.
C 443-76	Joints for Circular Concrete Sewer and Culvert Pipe, Using Flexible, Watertight, Rubber Type Gaskets.
C 478-75	Precast Reinforced Concrete Manhole Sections.
C 700-75	Extra Strength and Standard Strength Clay Pipe and Perforated Clay Pipe.
D 1056-73	Sponge and Expanded Cellular Rubber Products.
D 2729-75	Poly (Vinyl Chloride) (PVC) Sewer Pipe and Fittings.

1.3 American National Standards Institute (ANSI):

A21.1-(1967)(R1972)	Thickness Design of Cast-iron Pipe.
A21.6-1975	Cast-iron Pipe Centrifugally Cast in Metal Molds for Water or Other Liquids.
A21.8-1975	Cast-iron Pipe Centrifugally Cast in Sand-lined Molds, for Water or Other Liquids.
A21.10-1971	Gray-iron and Ductile-iron Fittings, 2 in. Through 48 in., for Water and Other Liquids.
A21.11-1972	Rubber Gasket Joints for Cast-iron and Ductile-iron Pressure Pipe and Fittings.

A21.15-1975	Flanged Cast-iron and Ductile-iron Pipe With Threaded Flanges.
A21.51-1976	Ductile-iron Pipe, Centrifugally Cast in Metal Molds or Sand-lined Molds, for Water or Other Liquids.

1.4 North Carolina Department of Transportation (NCDOT):

"Standard Specifications for Roads and Structures", dated July 1, 1978.
"Roadway Standards", dated July 1, 1972.

1.5 LANTDIV Plates:

SD-1	Standard Catch Basin.
SD-3	Standard Airfield Catch Basin.
SD-4	Standard Airfield Shallow Catch Basin, Types "A" and "B".
SD-5	Standard Curb Inlet, Type "A" - 4 foot throat.
SD-6	Standard Curb Inlet, Type "B" - 7 foot throat.
SD-7	Standard Manhole, Drainage.
SD-9	Gravity Concrete Headwall, Type "A".
SD-11	Reinforced Concrete Headwall, Type "C".
SD-12	Airfield Catch Basin Frame Details, Standard Type "A".
SS-3	Cleanout Detail

2. QUALITY CONTROL: All field tests to determine conformance with the specified requirements shall be performed in the presence of the Contractor's Quality Control Representative.

3. SUBMITTALS:

3.1 Material Tests and Test Reports: The testing requirements for materials incorporated in referenced documents will be waived provided the manufacturer submits certificates stating that previously manufactured materials have been tested by recognized laboratories, that such materials meet testing requirements specified, and that the materials furnished for this project are of the same type, quality, manufacture and make as that tested. Copies of the test reports need not be submitted except as specifically requested by the Contracting Officer.

3.2 Certificates: Submit certificates from the manufacturer attesting that the following products conform to all requirements of this specification and of reference documents:

(a) Pipe and Jointing Materials

(b) Brick

(c) Masonry Units

(d) Precast Manholes

(e) Frames, Grates, and Covers for Drainage Structures

3.2.1 Sample Certificate: The certificate shall not contain statements that could be interpreted to imply that the product does not meet all requirements specified, such as "as good as"; "achieve the same end use and results as materials formulated in accordance with the referenced specifications"; "equal or exceed the service and performance of the specified material". The certificate should simply state that the product conforms to all requirements specified.

SAMPLE CERTIFICATE

The manufacturer hereby certifies that the following products being furnished for this project conform to all requirements of the project specification and of the reference specifications listed:

MANUFACTURER AND PRODUCT	REFERENCE SPECIFICATION
John Doe Company Portland Cement, Type I	ASTM C150-74, Type I

SIGNATURE AND TITLE

3.3 Catalog Data: Submit complete descriptive literature for each type of each of the following items. Data which describe more than one type, size, model, or item shall be clearly marked to indicate which type, size, model, or item the Contractor intends to provide. Data shall be sufficient to show conformance to specified requirements.

(a) Frames, Grates, and Covers for Drainage Structures.

(b) Pipe Couplings and Gaskets.

(c) Precast Manholes.

(d) Shear Gates.

4. STORAGE AND HANDLING: Proper facilities shall be provided for handling and lowering sections of pipe into place to avoid injury or damage. Damaged pipe or pipe with damaged coatings shall be removed from the site and replaced with satisfactory pipe at no additional cost to the Government.

5. MATERIALS:

5.1 Concrete Pipe: Pipe size under 12-inch diameter shall be nonreinforced concrete pipe. Pipe sizes 12-inch diameter through 24-inch diameter may be either reinforced or non-reinforced concrete pipe. Pipe sizes larger than 24-inch diameter shall be reinforced concrete pipe.

5.1.1 Non-Reinforced Concrete Pipe: ASTM C14, Class 2.

5.1.2 Reinforced Concrete Pipe: ASTM C76. Class III.

5.2 Joints for Concrete Pipe: Joints shall be one of the following types:

(a) Bell and spigot with rubber gaskets

(b) Tongue and groove with rubber gaskets

(c) Tongue and groove with preformed plastic gaskets

5.2.1 Rubber Gaskets: ASTM C443. Only a neutral agent shall be used as a lubricant.

5.2.2 Preformed Plastic Gaskets: SS-S-210, type I-rope form.

5.3 Corrugated Metal Pipe:

5.3.1 Corrugated Iron Or Steel Pipe: WW-P-405 for Class I or II, Shape 1, Coating C. Minimum gage of metal, before coating, shall be as indicated in the following table:

Pipe Diameters	12"-24"	30"-36"	42"-54"	60"-72"
Minimum Gage	16	14	12	10

5.4 Joints in Corrugated Metal Pipe: Joints shall be watertight joints.

5.4.1 Watertight Joints: Coupling bands shall be as specified in the referenced federal specification for the pipe, except that connecting angles shall be omitted and circumference of the band shall be such that, when coupled, there will be a 3-inch lap. Coupling bands shall be coated with same bituminous material as pipe. For tightening each coupling band, four 1/2-inch diameter zinc-coated steel rod hoops with silo lugs shall be provided. On riveted pipe the longitudinal seam rivets which would be under the coupling band shall be omitted and that portion of the seam welded. At the option of the Contractor, watertight joints may be made using one of the following methods:

(a) Watertight joints in corrugated metal pipe may be made with coupling bands and flat rubber gaskets. Gaskets shall be made of 3/8-inch thick by 7-inch minimum width closed cell, expanded synthetic rubber fabricated in the form of a cylinder with a diameter approximately 10 percent less than the nominal pipe size. Gasket material shall conform to ASTM D1056, Grade RE-43. Coupling bands may be one or two pieces and of the angle-lug, rod-and-lug, or U-bolt type and shall be bituminous coated as specified for the pipe. The exterior rivet heads in the longitudinal seam under the coupling band shall be countersunk, or the rivets shall be omitted and the seam welded.

(b) Watertight Joints in Corrugated Metal Pipe may also be made utilizing the coupling band and 'O'-ring gasket system. The 'O'-ring gaskets shall be 13/16-inch diameter rubber gaskets conforming to ASTM C443. One gasket shall be installed in the first corrugation of each pipe section being joined. Coupling bands shall be manufacturer's standard watertight coupling bands for this system, containing one corrugation on each end to engage the second corrugation of the pipe sections being joined. Pipe shall have at least two annular corrugations rolled into each end for fitting of gaskets and engaging corrugations on the band. Bands shall be galvanized steel 0.064-inch minimum thickness and 10-1/2-inch minimum width, and shall be fitted with assembly bar and strap, and two 1/2-inch bolts.

5.5 Cast-iron Pipe:

5.5.1 Cast-iron pipe shall conform to the applicable requirements of WW-P-421 for Grade A, B, or C, as modified herein. Pipe shall be thickness Class 22 for cast gray iron pipe and thickness Class 50 for cast ductile iron pipe, except as otherwise specified for flanged pipe. Pipe shall have cement-mortar lining and shall have ends suitable for joints specified hereinafter.

(a) Gray cast-iron pipe shall conform to the applicable requirements of ANSI A21.6 or ANSI A21.8, except as modified by WW-P-421, and except that flanged pipe shall conform to ANSI A21.15 minimum 150 PSI working pressure, outside coated, cement-mortar lined.

(b) Ductile-iron pipe shall conform to the applicable requirements of ANSI A21.51, except as modified by WW-P-421, and except that flanged pipe shall conform to ANSI A21.15, minimum 150 PSI working pressure, outside coated, cement-mortar lined.

5.5.2 Joints for Cast Gray and Ductile Iron Pipe:

(a) Push-On Joints: Shape of pipe ends shall conform to the applicable requirements of WW-P-421 for Type II pipe. Conformation of ends for fittings shall conform to the applicable requirements of ANSI A21.11 (AWWA C111). Gaskets and lubricants for pipe and fittings shall conform to the applicable requirements of ANSI A21.11 (AWWA C111). Drawings of the joint and gasket shall be furnished. Push-on joints shall also meet the applicable requirements of UL 194.

(b) Mechanical Joints: Dimensional and material requirements for pipe ends, glands, bolts and nuts, and gaskets shall conform to the applicable requirements of ANSI A21.11 (AWWA C111) or to the applicable requirements specified for Type III pipe in WW-P-421. Mechanical joints shall also meet the applicable requirements of UL 194.

(c) Flanged Joints: Ends of pipe and fittings shall be provided with cast-iron flanges conforming to the applicable requirements of ANSI A21.15. Bolts, nuts, and gaskets for flanged connections shall conform to the

recommendations in the Appendix to ANSI A21.15. Gaskets shall be plain rubber, 1/8-inch thick.

5.6 Poly (Vinyl Chloride) (PVC) Sewer Pipe and Fittings: ASTM D 2729.

5.7 Cast Iron Soil Pipe and Fittings: ASTM A74.

5.8 Perforated Pipe:

5.8.1 Poly (Vinyl Chloride) (PVC) Sewer Pipe and Fittings: ASTM D 2729.

5.8.2 Clay Pipe and Fittings: ASTM C700, Standard Strength.

5.8.3 Joints for Clay Pipe: Compression joints conforming to ASTM C425.

5.9 Shear Gates: Iron body, bronze mounted. Wedges shall be bolted on to permit replacement without replacement of frame. Frame end to match receiving pipe. Lifting handle shall be of the length indicated.

5.10 Floor Drains: 13" round tap, bottom outlet, coated cast iron floor drain with double drainage flange, weepholes, bottom outlet inside caulk connection, round tap and medium - duty loose set anti-tilting grate with perimeter drainage slots. Grate free area shall be a minimum of 60 square inches.

5.11 Drainage Structures: Unless indicated otherwise on the drawings or specified otherwise herein, drainage structures shall be in accordance with the LANTDIV Plates at the end of this section. Structures shall be constructed of clay brick, solid concrete masonry units, or cast-in-place concrete, except that airfield catch basins, headwalls, gutters and top of curb inlets, and bases of all structures shall be concrete. Precast concrete structures may be provided at the Contractor's option. The applicable LANTDIV Plate numbers for each respective type of structure is as follows:

Standard Catch Basin	LANTDIV Plate SD-1
Standard Airfield Catch Basin	LANTDIV Plate SD-3
Standard Airfield Shallow Catch Basin	LANTDIV Plate SD-4
Standard Curb Inlet, Type A	LANTDIV Plate SD-5
Standard Curb Inlet, Type B	LANTDIV Plate SD-6
Standard Manhole	LANTDIV Plate SD-7
Gravity Concrete Headwall	LANTDIV Plate SD-9
Reinforced Concrete Headwall	LANTDIV Plate SD-11
Airfield Catch Basin, Grate and Frame Details, Standards	LANTDIV Plate SD-12
Cleanout Detail	LANTDIV Plate SS-3

5.11.1 Brickwork: ASTM C32 for standard size, Grade MS, or ASTM C62 for standard size, grade SW brick, except that the absorption test will be waived. Joints in walls other than circular shall be laid in stretcher courses with every 5th course to be a header course with full close joints. Cement mortar shall be mixed in the proportion of one part Portland cement and 2 parts of

approved mortar sand. The quantity of water in the mixture shall be sufficient to produce a stiff workable mix. Water shall be potable and free from harmful acids, alkalies and organic impurities. The mortar shall be used within 30 minutes after the ingredients are mixed with water.

5.11.2 Solid Concrete Masonry Units: ASTM C139. Masonry units shall be laid in horizontal courses with vertical joints broken; shall be laid in mortar and all joints shall be completely filled with mortar. Mortar shall be as specified above for brickwork.

5.11.3 Metal Work: Except as specified or indicated otherwise, material shall conform to the requirements of RR-F-621 and shall be of cast iron. Frames, covers, and gratings in paved areas and where otherwise indicated or specified shall be of the "traffic" design of RR-F-621. Steel shapes, plates, bars, and rods shall be standard commercial steel. Surfaces of steel frames and covers shall be cleaned, primed, and painted as specified in section titled, "Field Painting". Frames and covers of steel shall be welded by qualified welders in accordance with standard commercial practice. Steel gratings shall be of welded construction and conform to the applicable requirement of RR-G-661, type I, end banded. Steps are required in manholes and catch basins more than 4 feet deep.

5.11.4 Precast Concrete Manholes: Risers and tops shall conform to ASTM C478, except that spacing of manhole steps or ladder rungs shall not exceed 12 inches. They shall be laid in full beds of mortar. Concrete precast and cast-in-place bases shall have smooth inverts accurately shaped to a semi-circular bottom conforming to the inside contour of the adjacent sewer sections. Changes in direction of the sewer and entering branches into the manhole shall have a circular curve in the manhole invert of as large a radius as the size of the manhole will permit. Joints in precast sections shall be made with preformed plastic gaskets conforming to SS-S-210. Precast manholes shall be provided with a 12-inch layer of gravel bedding under the concrete bases of the manholes.

5.11.5 Headwalls: Headwalls shall be constructed of concrete.

5.12 Flared Ends: NCDOT "Standard Specifications for Roads and Structures" and "Roadway Standards". Material used shall be the same as that used for the pipe. Flared ends are in addition to the lengths of pipe shown. Grading at flared ends, unless otherwise shown, shall be in accordance with the applicable standards of the NCDOT "Roadway Standards" with respect to the type of material used for flared ends, i.e., concrete or metal.

5.13 Flap Valves: Iron body, bronze mounted with bronze hinge pin, flap ring, and seat ring. Frame end to match receiving pipe.

6. REQUIREMENTS: Work in this section includes storm drainage systems outside of buildings and subdrain systems. Drain piping within buildings and within the five-foot building line (line drawn five feet outside the outside face of building walls and parallel thereto) is specified in the section

entitled "Plumbing", except for subdrain systems which are specified herein. Concrete, or corrugated metal pipe shall be used for storm drainage system, except as otherwise indicated. Manholes, catch basins, junction boxes, and inlets shall be constructed of masonry or reinforced concrete. Excavating, trenching, backfilling, and density tests are specified in section entitled, "Earthwork". Concrete is specified in section entitled, "Cast-In-Place Concrete".

7. INSTALLATION: Each section of pipe shall be carefully examined before being laid, and defective or damaged pipe shall not be used. Proper facilities shall be provided for lowering sections of pipe into trenches. Lifting lugs in vertically enlongated metal pipe shall be placed in the same vertical plane as the major axis of the pipe. Under no circumstances shall pipe be laid in water, and no pipe shall be laid when trench conditions or weather are unsuitable for such work. Diversion of drainage or dewatering of trenches during construction shall be provided as necessary. Pipe shall be laid true to the grades indicated and shall rest upon the pipe bed for the full length of each section. Provide batterboards spaced not more than 26 feet apart along the trench for checking installation of pipe to insure proper slope and elevation. Laser beam method may be used for insuring proper slope and elevation. Runs of pipe shall be laid with outside laps or grooved ends upgrade beginning at the lower end of the pipe line. Pipe having its grade or joint disturbed after laying shall be taken up, cleaned, and relaid. When pipes are protected by head walls or connect with drainage structures, the exposed ends of the pipe shall be placed or cut flush with the face of the structure. After the pipe is cut, the rough edges shall be smoothed up in an approved manner. All pipe shall be laid so that markings are on top and the inner surfaces abut neatly, tightly, and smoothly. All pipe in place shall be inspected and approved before being covered and concealed.

7.1 Corrugated Metal Pipe Joints: Pipes shall be butted to form a smooth joint; the space between the pipe and coupling bands shall be kept free from dirt and grit so that the corrugations fit snugly. The coupling band while being tightened shall be tapped with a softhead mallet of wood, rubber, or plastic to take up slack and insure a tight joint. The annular space between abutting sections of paved invert pipe in sizes 30-inches and larger shall be filled with bituminous material after jointing. Coupling band bolts and damaged areas of the coupling bands and pipe shall be given a coating of asphalt cement. Pipe on which the asphalt coating has been damaged to such extent that satisfactory field repairs cannot be made will be rejected.

7.2 Concrete Pipe Joints:

7.2.1 Rubber gasket and preformed plastic joint installation shall be in accordance with the printed recommendations of the manufacturer of the joint material. Surfaces to receive lubricants, cements, or adhesives shall be clean and dry. Gaskets and jointing materials shall be affixed to the pipe not more than 24 hours prior to the installation of the pipe, and shall be protected from the sun, blowing dust, and other deleterious agents at all times. Gaskets and jointing materials shall be inspected before installation

of the pipe, and any loose or improperly affixed gaskets and jointing materials shall be removed and replaced. The pipe shall be aligned with the previously installed pipe, and the joint pulled together. If, while making the joint, the gasket or jointing material becomes loose and can be seen through the exterior joint recess when the joint is pulled up to within one inch of closure, the pipe shall be removed and the joint remade.

7.3 Watertight Joints in Corrugated Metal Pipe:

7.3.1 Rod Hoop and Silo Lugs: The coupling bands shall be attached and drawn tight by means of four 1/2-inch diameter steel rod hoops and silo lugs. The ends of the band shall lap 3-inches under the lugs. Before connecting band is placed around the pipe, the ends of the pipe which will be in contact with the band shall be coated with cold applied bituminous material or the contact surface of the band and pipe shall be wiped with a bituminous solvent. The band shall be tightened evenly until flow of the bituminous material terminates.

7.3.2 Couplings and Flat Gaskets: Installation of gaskets shall be in accordance with the recommendations of the gasket manufacturer in regard to the use of lubricants and cements and other special installation requirements. The gasket shall be placed over one end of a section of pipe for half the width of the gasket; the other half being doubled over the end of the same pipe. When the adjoining section of pipe is in place, the doubled-over half of the gasket shall then be rolled over the adjoining section. Any unevenness in overlap shall be corrected so that the gasket covers the ends of the pipe sections equally. Connecting bands shall then be centered over the adjoining sections of pipe, and rods or bolts placed in position and nuts tightened. The band shall be tightened evenly, even tension being kept on the rods or bolts, and the gasket shall be closely observed to see that it is seating properly in the corrugations.

7.3.3 Couplings and 'O'-Ring Gaskets: Installation of the gaskets and coupling bands shall be in accordance with the printed instructions of the pipe and gasket manufacturers. The end corrugation on each end of abutting pipe sections shall be provided with an 'O'-ring gasket. The corrugations on the band shall mate into the adjacent corrugation on each end of the pipe. The band shall be tightened evenly, even tension being kept in the bolts, and gaskets shall be properly seated.

8. TEST PROCEDURES: A light held in a manhole shall show a practically full circle of light through the pipe when viewed from the adjoining end of the line. Lines under pavement shall be tested for infiltration by means of a suitable weir or other device as directed. When determination of infiltration is not practicable because of dry trench conditions, and exfiltration test shall be applied by filling with water so that the hydraulic head will be at least 4 feet above the crown of the upper end of the section being tested. The amount of leakage (infiltration or exfiltration) shall not exceed 500 gallons per inch of diameter per day per mile of pipe. Water for testing shall be furnished by the Contractor.

---END---

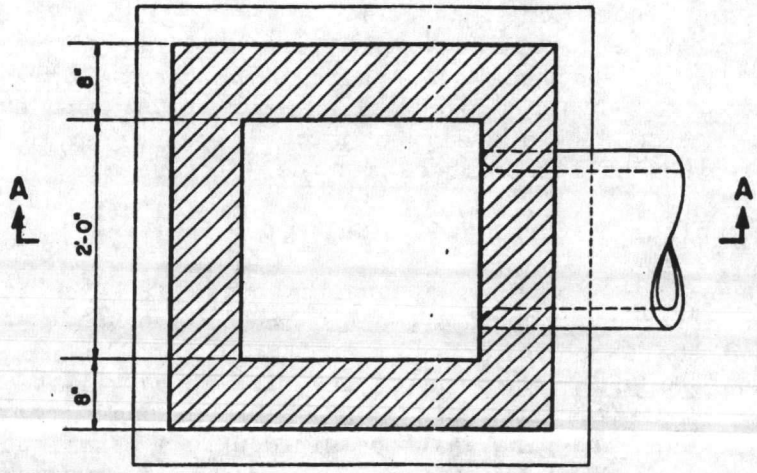

CAPACITY TABLE	
Head ft.	Capacity cfs
0.2	2.4
0.4	3.4
0.6	4.2
0.8	4.9
1.0	5.4

PLAN

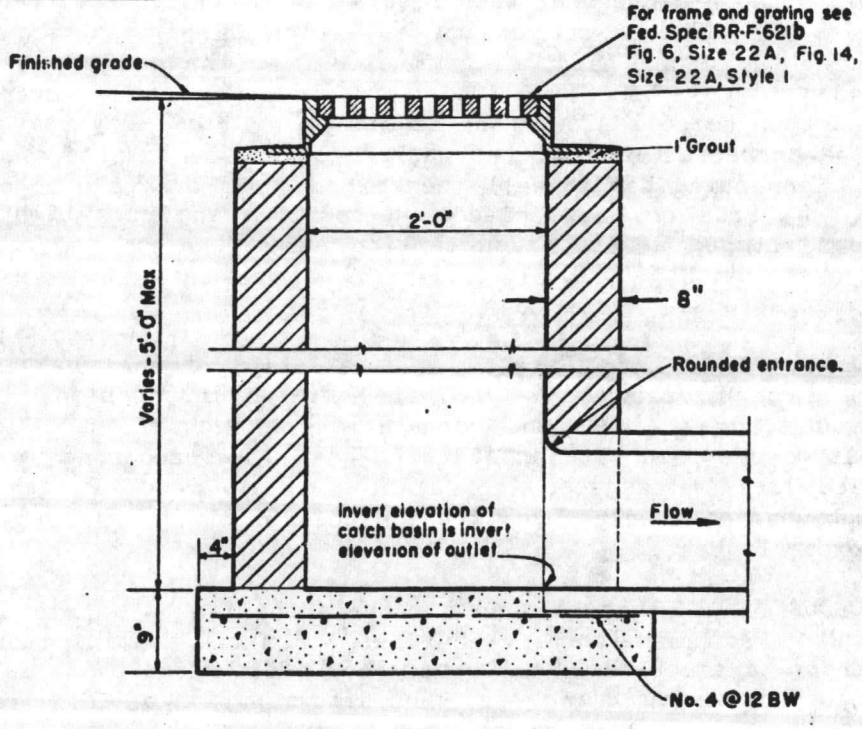

SECTION A-A

STANDARD CATCH BASIN
18" PIPE AND SMALLER

LANTDIV PLATE SD-1

05-77-7526
02501-10

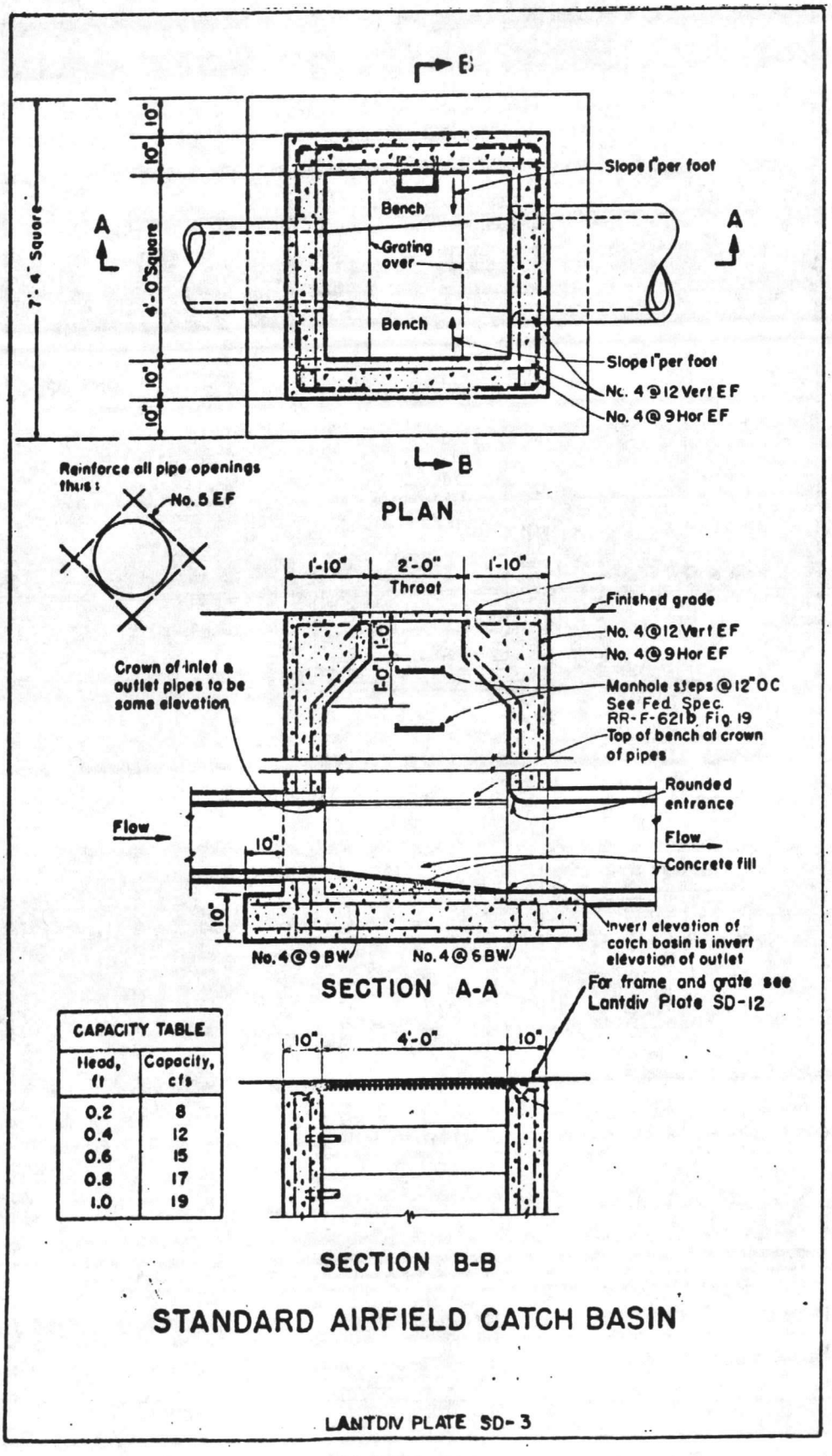

CAPACITY TABLE	
Head, ft	Capacity, cfs
0.2	8
0.4	12
0.6	15
0.8	17
1.0	19

STANDARD AIRFIELD CATCH BASIN

LANTDIV PLATE SD-3

05-77-7526
02501-11

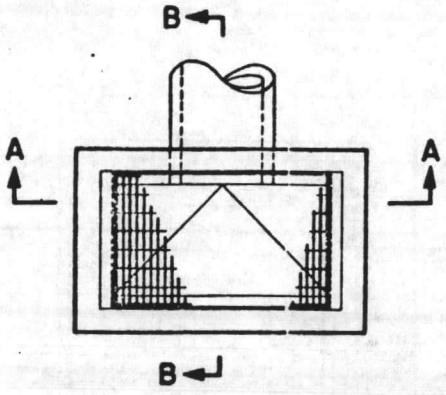

PLAN

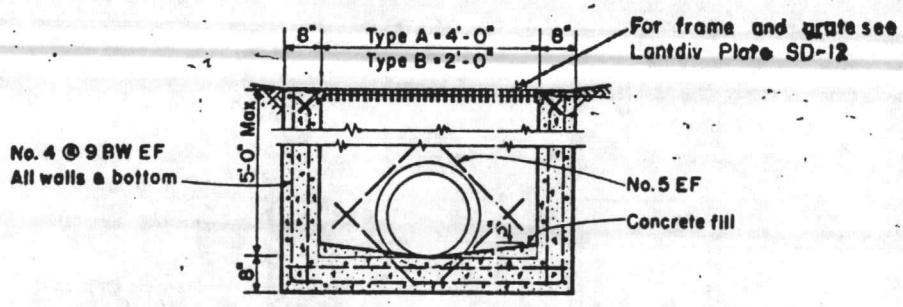

SECTION A-A

CAPACITY TABLE		
Head, ft	Capacity, cfs	
	Type "A"	Type "B"
0.2	8	4
0.4	12	6
0.6	15	7
0.8	17	8
1.0	19	9

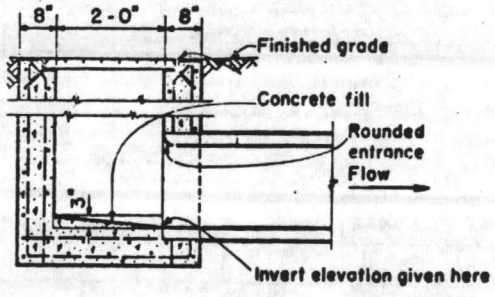

SECTION B-B

STANDARD AIRFIELD SHALLOW CATCH BASIN
TYPES "A" & "B"

LANTDIV PLATE SD-4

05-77-7526
02501-12

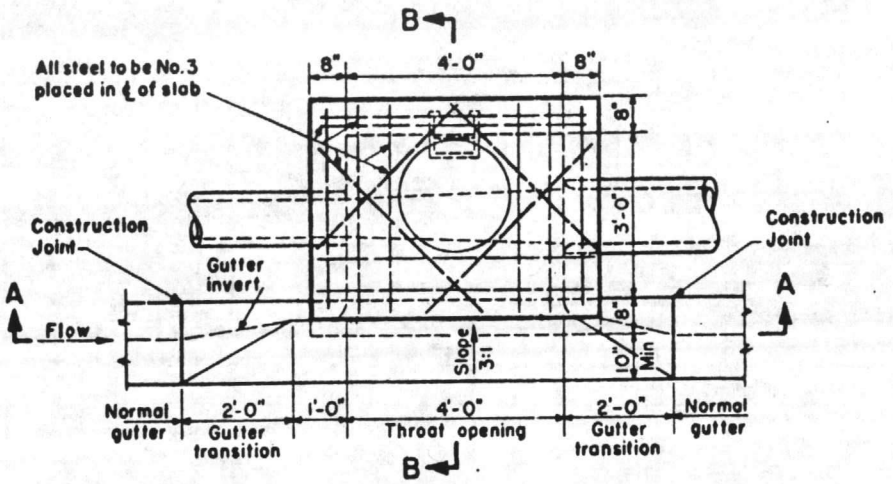

PLAN

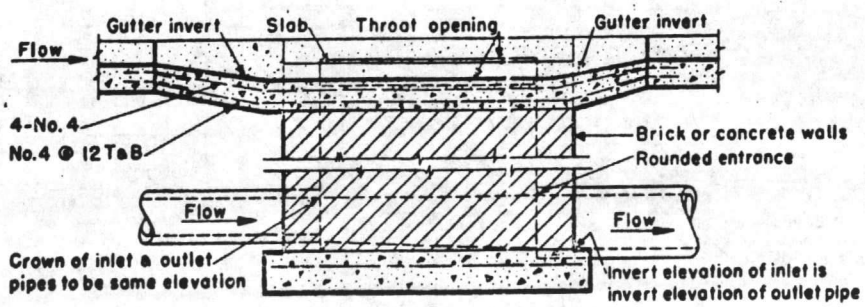

SECTION A-A

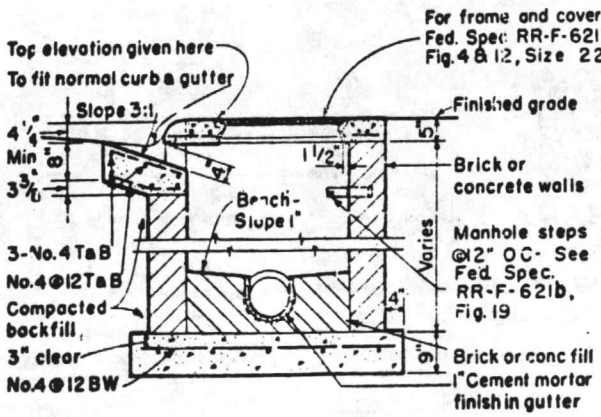

CAPACITY TABLE	
Street Grade, per cent	Capacity, cfs
1.0	0.5
2.0 to 4.0	0.4
5.0	0.3

Based upon 1% road crown slope. Capacity increased 50% for 2% crown slope

SECTION B-B

STANDARD CURB INLET
TYPE "A" - 4' THROAT

LANTDIV PLATE SD-5

05-77-7526
02501-13

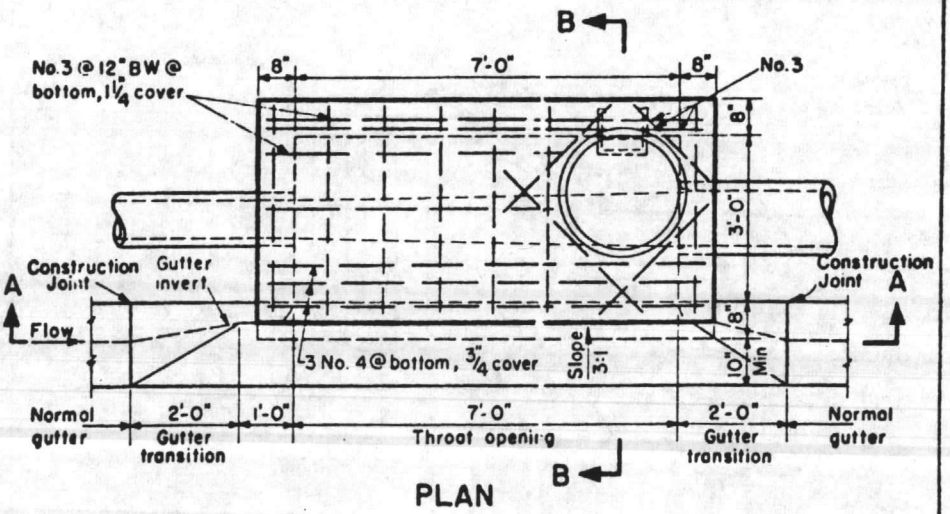

PLAN

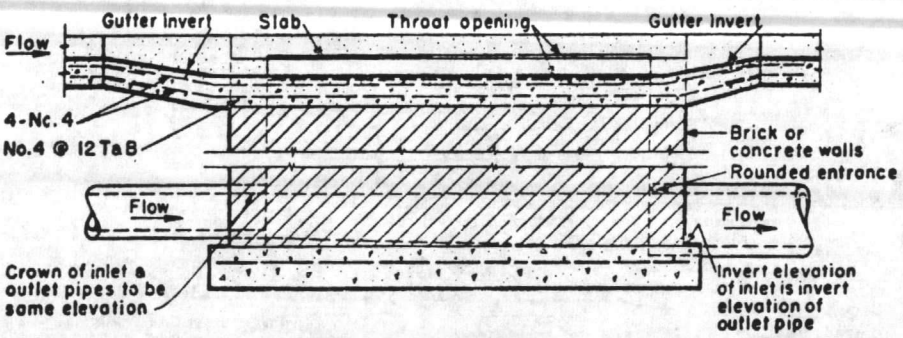

SECTION A-A

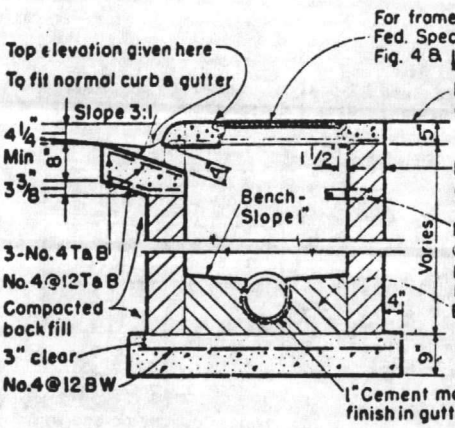

CAPACITY TABLE	
Street Grade, per cent	Capacity, cfs
0.5	1.3
1.0	1.1
2.0	1.0
3.0 to 4.0	0.9
5.0 to 6.0	0.8

Based upon 1% road crown slope. Capacity increased 50% for 2% crown slope

SECTION B-B

STANDARD CURB INLET
TYPE "B" - 7' THROAT

LANTDIV PLATE SD-6

05-77-7526
02501-14

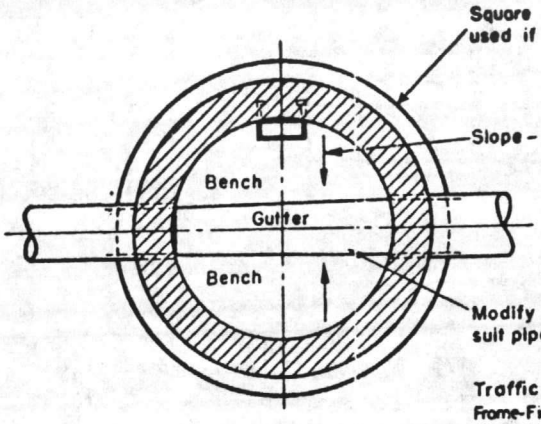

PLAN

Traffic (Size 22 A)
Frame-Fig. 1
Cover-Fig 8
Grating-Fig. 13, Style 1
Non-Traffic (Size 22)
Frame- Fig 4
Cover- Fig. 12
Grating-Fig. 15
For frame, cover, & grating see Fed. Spec RR-F-621b

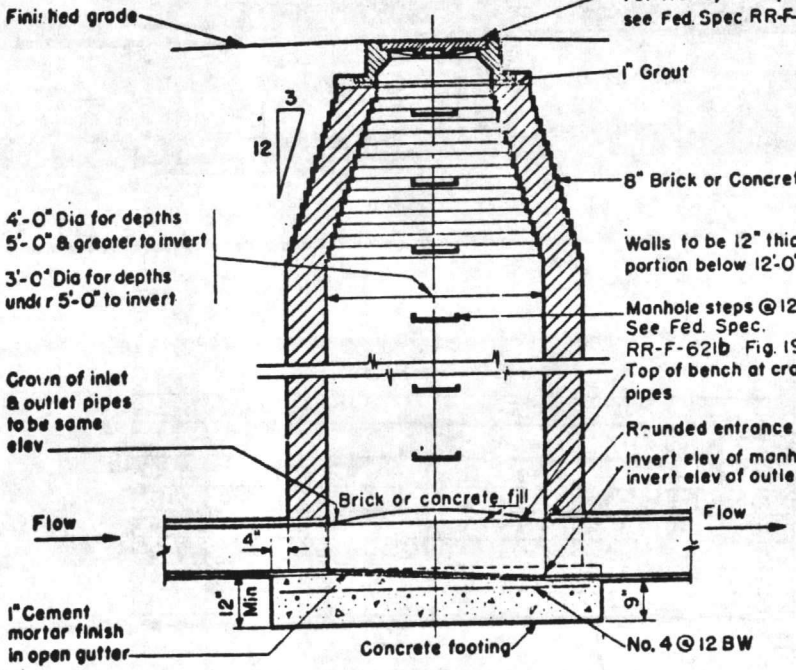

SECTION

STANDARD MANHOLE
DRAINAGE

LANTDIV PLATE SD-7

05-77-7526
02501-15

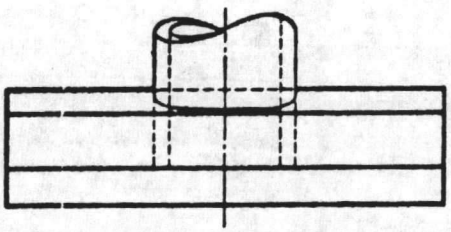

PLAN

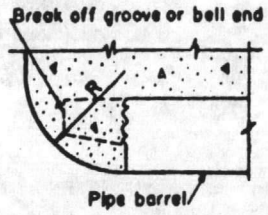

ROUNDED ENTRANCE
(UPSTREAM HEADWALLS ONLY)

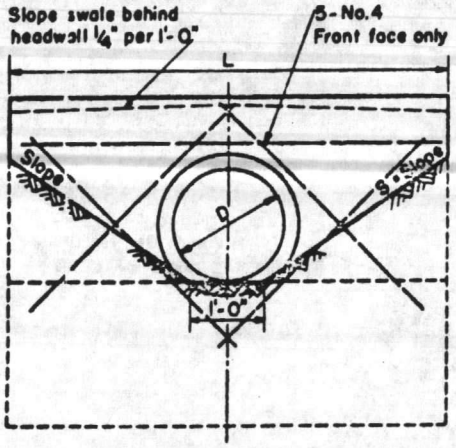

ELEVATION

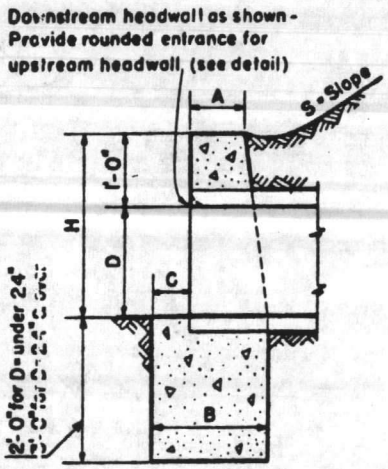

SECTION

ALL SLOPES						S=1½:1	S=2:1	S=3:1
D	H	A	B	C	R	L	L	L
8"	1'-8"	8"	1'-0"	0	-	3'-6"	4'-2"	5'-6"
10"	1'-10"	8"	1'-0"	0	-	4'-0"	4'-10"	6'-6"
12"	2'-0"	10"	1'-4"	4"	-	4'-6"	5'-6"	7'-6"
15"	2'-3"	10"	1'-4"	4"	2¼"	5'-3"	6'-6"	9'-0"
18"	2'-6"	10"	1'-7"	6"	2¾"	6'-0"	7'-6"	10'-6"
21"	2'-9"	1'-0"	1'-9"	6"	3⅛"	6'-9"	8'-6"	12'-0"
24"	3'-0"	1'-0"	1'-9"	6"	3⅝"	7'-6"	9'-6"	13'-6"
27"	3'-3"	1'-2"	2'-0"	8"	4"	8'-3"	10'-6"	15'-0"
30"	3'-6"	1'-3"	2'-1"	8"	4½"	9'-0"	11'-6"	16'-6"
36"	4'-0"	1'-3"	2'-4"	10"	5½"	10'-6"	13'-6"	19'-6"
42"	4'-6"	1'-6"	2'-7"	12"	6⅜"	12'-0"	15'-6"	22'-6"

GRAVITY CONCRETE HEADWALL
TYPE "A"

LANTDIV PLATE SD-9

05-77-7526
02501-16

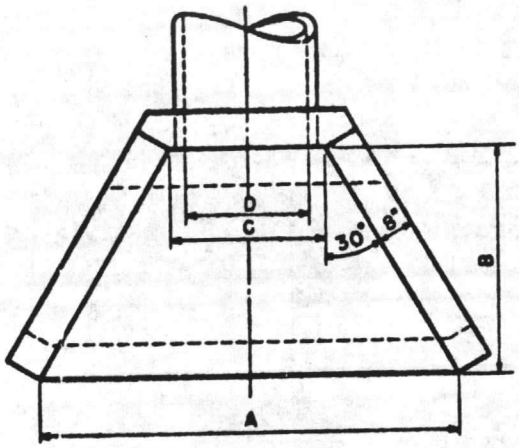

PLAN

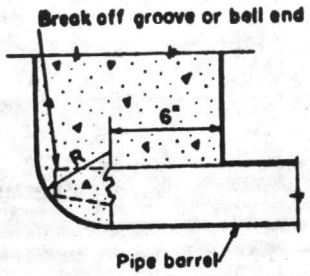

ROUNDED ENTRANCE
(UPSTREAM HEADWALLS ONLY)

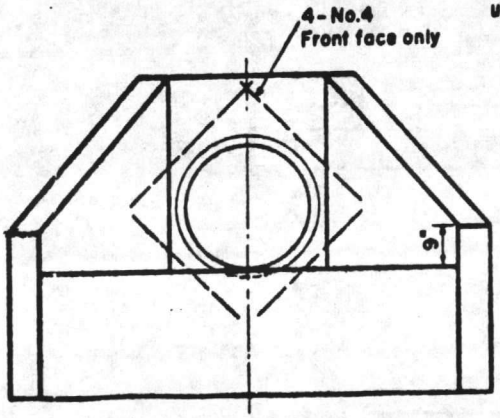

ELEVATION

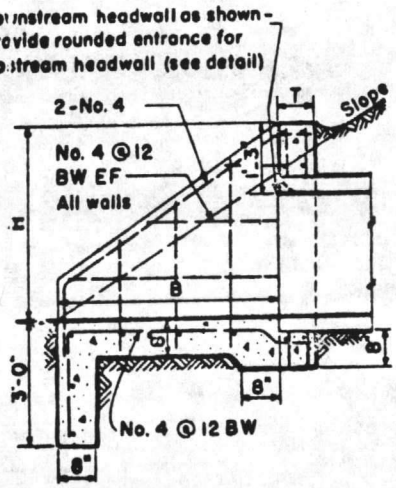

SECTION

ALL SLOPES				SLOPE 1½:1		SLOPE 2:1		SLOPE 3:1	
D	H	R	C	A	B	A	B	A	B
24"	3'-3"	3 5/8"	2'-7"	6'-11"	3'-9"	8'-4"	5'-0"	11'-3"	7'-6"
27"	3'-6"	4"	2'-11"	7'-3"	4'-2"	9'-3"	5'-6"	12'-6"	8'-3"
30"	3'-9"	4 1/2"	3'-3"	8'-6"	4'-6"	10'-2"	6'-0"	13'-8"	9'-0"
36"	4'-3"	5 1/2"	3'-11"	10'-1"	5'-3"	12'-0"	7'-0"	16'-1"	10'-6"
42"	4'-9"	6 3/8"	4'-7"	11'-6"	6'-0"	13'-10"	8'-0"	18'-6"	12'-0"

T = 8" for downstream headwalls; R = 6" for upstream headwalls

REINFORCED CONCRETE HEADWALL
TYPE "C"

LANTDIV PLATE SD-11

05-77-7526
02501-17

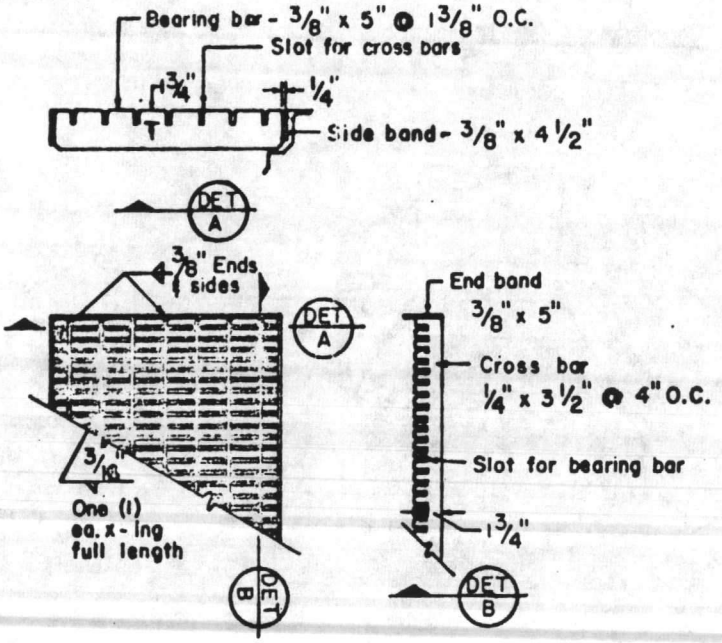

PARTIAL PLAN

AIRFIELD CATCH BASIN GRATE DETAILS, STANDARD TYPE "A"

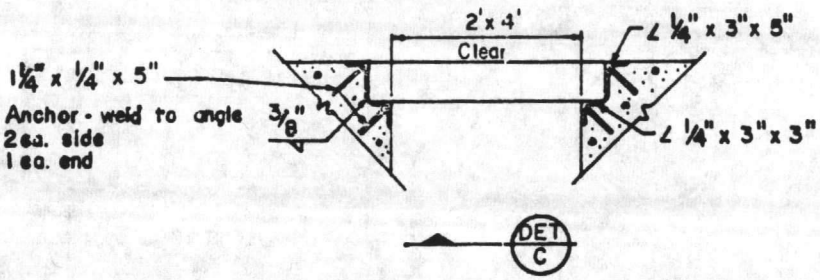

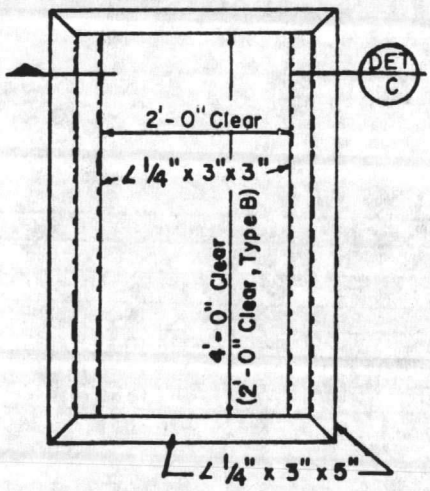

PLAN

AIRFIELD CATCH BASIN FRAME DETAILS, STANDARD TYPE "A"

LANTDIV PLATE SD-12

05-77-7526
02501-18

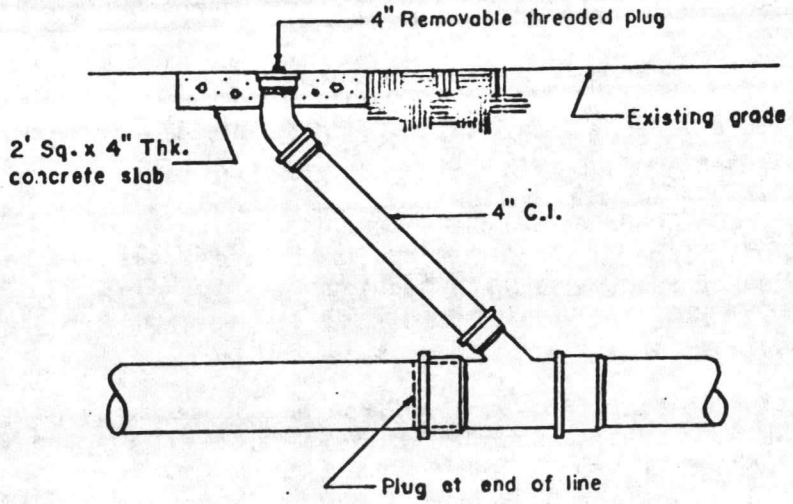

CLEANOUT DETAIL
NOT TO SCALE

LANTDIV PLATE SS-3

05-77-7526
02501-19

SECTION 02608. BITUMINOUS CONCRETE PAVEMENT

1. APPLICABLE PUBLICATIONS: The following publications of the issues listed below, but referred to elsewhere by basic designation only, form a part of this specification to the extent indicated by the references thereto.

1.1 Federal Specifications:

TT-P-115E	Paint, Traffic, Highway, White and Yellow.

1.2 American Association of State Highway and Transportation Officials (AASHTO):

M82-70	Cut Back Asphalt (Medium Curing Type).
M140-70	Emulsified Asphalt (Rapid Setting and Slow Setting).
M156-70	Mixing Plants for Hot Mixed, Hot Laid Bituminous Paving Mixtures.
M226-70	Viscosity Graded Asphalt Cement.
T96-721	Resistance to Abrasion of Small Size Coarse Aggregate by Use of the Los Angeles Machine.

1.3 American Society for Testing and Materials (ASTM):

A153-73	Zinc Coating (Hot-Dip) on Iron and Steel Hardware.
A446-72	Steel Sheet, Zinc Coated (Galvanized) by the Hot-Dip Process, Physical (Structural) Quality.
B209-74	Aluminum Alloy Sheet and Plate.

1.4 American National Standards Institute (ANSI):

D6.1-1971	Manual on Uniform Traffic Control Devices for Streets and Highways.

1.5 North Carolina Department of Transportation (NCDOT):

Standard Specifications for Roads and Structures, dated July 1, 1978.

2. SUBMITTALS:

2.1 Certificates: Submit certificates from the manufacturer attesting that the following products conform to all requirements of this specification and of reference documents:

a. Base Course Materials
b. Asphalts and Asphalt Cement
c. Paint

2.1.1 Sample Certificate: The certificate shall not contain statements that could be interpreted to imply that the product does not meet all requirements specified, such as "as good as"; "achieve the same end use and results as materials formulated in accordance with the referenced specification"; "equal or exceed the service and performance of the specified material". The certificate should simply state that the product conforms to all requirements specified.

SAMPLE CERTIFICATE

The manufacturer hereby certifies that the following products being furnished for this project conform to all requirements of the project specifications and of the reference specifications listed:

MANUFACTURER AND PRODUCT	REFERENCE SPECIFICATION
John Doe Company Portland Cement, Type I	ASTM C150-74, Type I.

SIGNATURE AND TITLE

2.2 Job Mix Formula: Before starting any work, the formula including mixing temperature, shall be submitted to the Contractor's Quality Control Representative for approval. The submission shall include a certified laboratory analysis of mix composition and the Marshall test value obtained therefrom for stability, void content, and flow. After the job mix formula is established and approved, all mixtures furnished shall conform to the ranges of tolerances specified in the referenced NCDOT specifications.

2.3 Material Tests and Test Reports: The testing requirements for materials incorporated in referenced documents will be waived provided the manufacturer submits certificates stating that previously manufactured materials have been tested by recognized laboratories, that such materials meet testing requirements specified, and that the materials furnished for this project are of the same type, quality, manufacture and make as that tested. Copies of the test reports need not be submitted except as specifically requested by the Contracting Officer.

3. MATERIALS:

3.1 Stone Base Course: Materials shall be in accordance with the NCDOT "Standard Specifications for Roads and Structures, Section 905 and 910 for Aggregate Base Course, Standard Size No. ABC. When tested in accordance with AASHTO T96, Test Grading A, aggregate shall show a loss not greater than 55 percent.

3.2 Bituminous Concrete Base Course: Materials shall be in accordance with NCDOT "Standard Specifications for Roads and Structures", Section 630, Bituminous Concrete Base Course, Type HB.

3.3 Bituminous Prime Coat: Material for bituminous prime coat shall be Grade MC-70 cut back asphalt conforming to AASHTO M82, or Grade SS-1 emulsified asphalt conforming to AASHTO M140.

3.4 Bituminous Tack Coat: Material for bituminous tack coat shall be asphalt cement AC-20 viscosity grade conforming to AASHTO M226.

3.5 Bituminous Concrete Binder Course: Materials and mix shall be in accordance with NCDOT "Standard Specifications for Roads and Bridges", Section 640, Bituminous Concrete Binder Course, Type H.

3.6 Bituminous Concrete: Materials and mix shall be in accordance with the NCDOT "Standard Specifications for Road and Structures", Section 645, Type I-1 or I-2 Surface Course. Asphalt cement shall be AC-20 viscosity grade conforming to AASHTO M226.

3.7 Paint: Pavement marking paint shall conform to TT-P-115 and shall be white, unless otherwise shown.

3.8 Traffic Control Signs: Signs shall be in conformance with the applicable requirements of ANSI D6.1 Manual on Uniform Traffic Control Devices. The sign panel shall be fabricated from galvanized steel having a nominal thickness after galvanizing of 0.0628 inches or from 0.081 inch thickness aluminum. The steel shall meet the requirements of ASTM A446 for Grade A steel, coating designation G165. The galvanizing shall be done by the minimized spangle process. The aluminum shall meet the requirements of ASTM B209 for alloy 6061-T6.

3.8.1 Sign Faces: Signs shall be faced with reflective sheeting consisting of spherical lens elements embedded within transparent plastic having a smooth, flat outer surface. The sheeting shall be weather resistant and have a protective pre-coated adhesive backing. Color of the reflective sheeting shall be within the tolerance limits of the Color Tolerance Charts prepared by the U.S. Federal Highway Administration, when compared with the charts under lighting conditions specified therein.

3.8.2 Sign Posts and Hardware: Sign posts shall be U-channel type heavy rail finished in green enamel. All nuts, bolts, washers, and other hardware shall be galvanized in accordance with ASTM A153.

3.9 Wheel Stops: Precast concrete units varying only in nonessential details from the units detailed on the drawings shall be provided. Concrete shall have a compressive strength of 3,000 p.s.i. The maximum size of coarse aggregate shall be 1-1/2 inches. Concrete shall have a slump of not more than 3 inches. The concrete mixtures shall have air content by volume of concrete, based on measurements made immediately after discharge from the mixer, of 4-1/2 plus or minus 1-1/2 percent. The reinforcement shall comply with requirements of the section entitled "Cast-In Place Concrete". Attachment rods and painting shall be as indicated on the drawings.

4. MIX PLANT: Bituminous mix plant shall conform to AASHTO M156.

5. REQUIREMENTS: The work includes construction of a crushed stone base with priming coat, a bituminous concrete base with tack coat on Holcombe Blvd., a bituminous concrete binder course and/or a bituminous concrete surface course as indicated by the typical sections. Preparation of the subgrade shall be as specified under the section of this specification entitled "Earthwork". Except as specified herein or indicated on the drawings, all work and materials shall be in accordance with the NCDOT "Standard Specifications for Roads and Structures". The provisions therein for method of measurement and payment do not apply. Aggregates for the bituminous mix shall be crushed stone.

6. CONSTRUCTION:

6.1 Crushed Stone Base Course: Spreading of the base material shall begin at the point nearest the source of supply. Hauling shall be done and traffic permitted over the base to assist in compaction. Any ruts formed by the traffic shall be carefully filled and re-rolled. After the base course is in place, machining and rolling shall continue until the surface is smooth, hard, well bonded, and true to the designed cross section. Compaction of 100 percent of maximum density, as determined by the method specified in the section entitled "Earthwork", shall be obtained in the base course. The base shall be machined as often as necessary to maintain it smooth and true to grade and cross section until the surface course is applied.

6.2 Bituminous Prime Coat: A bituminous prime coat shall be provided on the finished stone base course. Prime coat material shall be applied at a uniform rate of 0.35 gallon residual asphalt per square yard. Prime coat shall be allowed to cure for a period of at least 48 hours prior to placing the surface material. The prime coat shall be applied only when the surfaces to be treated are dry and atmospheric temperature is at least 50 degrees Fahrenheit. The treated surfaces shall be maintained and protected from damage until the bituminous paving material is placed. Any surface glaze on the base course shall be removed by approved methods just prior to application of the prime coat.

94% compaction

6.3 Bituminous Concrete Base Course: The bituminous plant mix shall be produced, transported to the site, and placed in accordance with NCDOT "Standard Specifications for Roads and Bridges", Section 610, Bituminous Plant Mix Pavements, General.

6.4 Bituminous Concrete Binder Course: The bituminous plant mix shall be produced, transported to the site, and placed in accordance with NCDOT "Standard Specifications for Roads and Bridges", Section 610, Bituminous Plant Mix Pavements, General.

6.5 Bituminous Tack Coat: A bituminous tack coat shall be provided on the surface of old pavements and on newly constructed bituminous base and binder courses. Tack coat material shall be applied at a uniform rate of from

0.03 to 0.10 gallon per square yard. No more tack coat material should be applied than can be covered with binder or surface course during the following day's operation. No binder or surface material shall be deposited thereon until the tack coat has sufficiently cured. Contact surfaces of headers, curbs, gutters, manholes, vertical faces of old pavements, and all exposed transverse and longitudinal edges of each course shall be painted or sprayed with tack coat before mixture is placed adjacent to such surfaces.

6.6 Bituminous Concrete Surface Course:

6.6.1 Placing Temperature: The temperature of the asphalt mixture at the time of dumping into the mechanical spreader shall be not less than 225 degrees Fahrenheit. Mixtures which have a temperature of less than 225 degrees Fahrenheit when dumped into the spreader will be rejected.

6.6.2 Joints: Where new pavement abuts existing flexible pavement, the existing surfacing course shall be cut back along uniform lines approximately six inches from the edge. The cut shall be made vertically and extend the full depth of the surfacing course. Prior to placing the surfacing course, the exposed edge of all cold joints shall be painted with a thin layer of asphalt cement.

6.6.3 The spreading and finishing equipment shall be capable of spreading the bituminous mixture to a uniform density and striking a smooth finish, true to cross section and free from inequalities. The screed shall be adjustable to shape the surface to true cross section.

6.6.4 Compaction: Equipment and compaction procedures shall be in accordance with the referenced standard highway specifications, modified if necessary to produce the density specified hereinafter.

6.6.5 Placing of the surface course shall be as nearly continuous as possible. The roller shall pass over the unprotected end of the mixture only when laying is discontinued for sufficient time to permit the mixture to cool, in which case a joint shall be made by cutting back the surface course to expose a granular surface for its full depth to bond with the fresh mixture. When laying is resumed, the exposed edge shall be coated with hot asphalt cement and the fresh mixture raked against the joint, thoroughly tamped with hot tamps and rolled. The surface course shall be compacted to a density of at least 96 percent of that obtained in the laboratory specimen.

6.6.6 Bituminous materials or mixtures shall not be produced or placed when weather is rainy or foggy, when the base course is frozen or shows any evidence of excess moisture, or when the air temperature is less than 40 degrees Fahrenheit in the shade away from artificial heat.

6.6.7 Finished surfaces shall be uniform in texture and appearance and free of cracks and creases.

6.6.8 Protection of Pavement: After final rolling, no vehicular traffic of any kind shall be permitted on the pavement until it has cooled and hardened, and in no case in less than six hours.

7. PAVEMENT MARKING: Vehicle parking spaces and pavement marking shall be marked with painted lines 4-inches in width. Workmanship shall be first class in every respect. Paint shall not be applied on fresh bituminous concrete; a waiting period of at least 7 days shall elapse after completion of the bituminous concrete paving before application of the paint. Paint shall be applied to clean, dry surfaces only and shall be protected from all traffic until thoroughly dry. The paint film shall be uniform and of sufficient thickness to completely conceal the pavement.

8. TRAFFIC SIGNS: All traffic signs shall be set in 6" diameter holes filled with concrete to a minimum depth of 36 inches. Height, lateral clearance, position and erection of signs shall conform to the "Manual on Uniform Traffic Control Devices for Streets and Highways", ANSI D6.1.

9. WHEEL STOPS: Units shall be placed where indicated on the drawings. Wheel stops shall be securely anchored as indicated and they may be shimmed with bituminous surface mix where necessary.

10. TESTS: All tests to determine conformance to the specified requirements shall be performed by the Contractor's Quality Control Organization. The following minimum number of tests shall be performed to insure compliance with the thickness and compaction requirements for base course and bituminous concrete binder and surface courses and job-mix requirements for bituminous concrete pavement:

(a) Thickness of base course and bituminous concrete binder and surface courses - one test for each 500 square yards or fraction thereof.

(b) Density of base course - one laboratory test for the project and one field test for each 1000 square yards or fraction thereof of each lift.

(c) Bituminous concrete job-mix test - one test for each 400 tons or fraction thereof of each mix to determine gradation and bitumen content.

(d) Density of bituminous concrete binder and surface courses - one field test for each 1000 square yards or fraction thereof.

---END---

SECTION 02609. PAVEMENT REMOVAL AND REPLACEMENT

1. APPLICABLE PUBLICATIONS: The following publications of the issues listed below, but referred to elsewhere by basic designation only, form a part of this specification to the extent indicated by the references thereto.

1.1 Non-Government Specifications and Standards:

North Carolina Department of Transportation (NCDOT): Standard Specifications for Roads and Bridges, dated July 1, 1978

2. QUALITY CONTROL: Quality control provisions of the sections entitled "Earthwork", and "Bituminous Concrete Pavement", shall apply with respect to applicable construction specified in this section.

3. SUBMITTALS:

3.1 Materials Tests and Test Reports: The testing requirements for materials incorporated in referenced documents will be waived provided the manufacturer submits certificates stating that previously manufactured materials have been tested by recognized laboratories, that such materials meet testing requirements specified, and that the materials furnished for this project are of the same type, quality, manufacture and make as that tested. Copies of the test reports need not be submitted except as specifically requested by the Contracting Officer.

3.2 Certificates: Submit certificates from the manufacturer attesting that the following products conform to all requirements of this specification and of reference documents:

a. Base materials
b. Asphalts and asphalt cement
c. Bituminous Concrete Mix

3.2.1 Sample Certificate: The certificate shall not contain statements that could be interpreted to imply that the product does not meet all requirements specified, such as "as good as"; "achieve the same end use and results as materials formulated in accordance with the referenced specification"; "equal or exceed the service and performance of the specified material". The certificate should simply state that the product conforms to all requirements specified.

SAMPLE CERTIFICATE

The manufacturer hereby certifies that the following products being furnished for this project conform to all requirements of the project specifications and of the reference specifications listed:

MANUFACTURER AND PRODUCT	REFERENCE SPECIFICATION
John Doe Company Portland Cement, Type I	ASTM C150-74, Type I.

SIGNATURE AND TITLE

4. REQUIREMENTS:

4.1 General: Where trenches, pits or other excavations are made in existing roadways and other areas of pavement where surface treatment of any kind exists, such surface treatment or pavement shall be restored to the same thickness and in the same kind as previously existed, except as otherwise specified, and to match and tie into the adjacent and surrounding existing surfaces in a neat and acceptable manner.

4.2 Pavement removal shall be accomplished with a straight line cut made 12 inches beyond the edge of the excavation to permit proper replacement. Removed pavement and debris and spoil material shall be removed from the limits of the station.

4.3 Backfilling and tamping of the disturbed area, prior to the establishment of the surface treatment, shall be in layers not to exceed six inches of loose depth, compacted as specified in the section entitled "Earthwork".

4.4 Bituminous: The type and thickness of surface and base as formerly existed shall be replaced. The replacement surface and base shall extend a minimum of 12 inches on each side of the excavated opening. The thickness of the replacement material shall be sufficient to provide a base and surface of equivalent strength to the undisturbed base and surface. Stone base course shall be in accordance with Section 520, and bituminous base and pavements shall be in accordance with Division 6, NCDOT "Standard Specifications for Roads and Bridges". The cut edges of bituminous pavement shall be painted with Grade RC-250 cut-back asphalt, AC-20 viscosity grade asphalt cement, or SS-1 emulsified asphalt to provide a good bond. Prime coat consisting of MC-70 liquid asphalt or SS-1 emulsified asphalt shall be applied on aggregate base course at the rate of 0.35 gallons residual asphalt per square yard.

---END---

SECTION 02613. PORTLAND CEMENT CONCRETE PAVEMENT FOR HELIPAD

1. APPLICABLE PUBLICATIONS: The following publications of the issues listed below, but referred to hereafter by basic designation only, form a part of this specification to the extent indicated by references thereto:

1.1 Federal Specifications:

O-C-105D & Am 1	Calcium Chloride, Dihydrate and Calcium Chloride, Anhydrous; Technical.
UU-B-790A	Building Paper, Vegetable Fiber: (Kraft, Waterproofed, Water Repellent and Fire Resistant).
CCC-C-467C	Cloth, Burlap, Jute (Or Kenaf).
DDD-M-148	Mats; Cotton (For Concrete Curing).

1.2 American Concrete Institute (ACI) Publications:

ACI 211.1-70	Recommended Practice for Selecting Proportions for Normal Weight Concrete.

1.3 American Society for Testing and Materials (ASTM) Publications:

C29-76	Unit Weight of Aggregate.
C31-69(1975)	Making and Curing Concrete Test Specimens in the Field.
C33-77	Concrete Aggregates.
C78-75	Flexural Strength of Concrete (Using Simple Beam with Third-point Loading).
C87-69(1975)	Effect of Organic Impurities in Fine Aggregate on Strength of Mortar.
C94-74a	Ready-Mixed Concrete.
C131-76	Resistance to Abrasion of Small Size Coarse Aggregate by Use of the Los Angeles Machine.
C136-76	Sieve or Screen Analysis of Fine and Coarse Aggregates.
C138-75	Unit Weight, Yield, and Air Content (Gravimetric) of Concrete.
C143-74	Slump of Portland Cement Concrete.
C150-77	Portland Cement.
C156-74	Water Retention by Concrete Curing Materials.
C173-75	Air Content of Freshly Mixed Concrete by the Volumetric Method.
C227-71(1976)	Potential Alkali Reactivity of Cement-Aggregate Combinations (Mortar Bar Method).
C231-75	Air Content of Freshly Mixed Concrete by the Pressure Method.
C233-76	Air-Entraining Admixtures for Concrete, Testing.
C260-74	Air-Entraining Admixtures for Concrete, Specifications.
C309-74	Liquid Membrane-Forming Compounds for Curing Concrete.
C360-63(1975)	Ball Penetration in Fresh Portland Cement, Concrete.
C418-76	Abrasion Resistance of Concrete.
C494-77	Chemical Admixtures for Concrete.

C535-69(1975) Resistance to Abrasion of Large Size Coarse Aggregate by Use of the Los Angeles Machine.

C595-76 Blended Hydraulic Cements.

1.4 Portland Cement Association (PCA) Publications:

Concrete Pavement Inspector's Manual.

2. QUALITY CONTROL: Approvals, except those required for field installations, field applications and field tests, shall be obtained before custom fabrication is started and before delivery of materials or equipment to the project site.

3. SUBMITTALS:

3.1 Certificates: Submit certificates from the manufacturer attesting that the following products conform to all requirements of this specification and of reference documents:

a. Fine and Coarse Aggregates
b. Admixtures
c. Curing Materials

3.1.1 Sample Certificate: The certificate shall not contain statements that could be interpreted to imply that the product does not meet all requirements specified, such as "as good as"; "achieve the same end use and results as materials formulated in accordance with the referenced specification"; "equal or exceed the service and performance of the specified material". The certificate should simply state that the product conforms to all requirements specified.

02613

SAMPLE CERTIFICATE

The manufacturer hereby certifies that the following products being furnished for this project conform to all requirements of the project specifications and of the reference specifications listed:

MANUFACTURER AND PRODUCT	REFERENCE SPECIFICATION
John Doe Company Portland Cement, Type I	ASTM C150-74, Type I.

SIGNATURE AND TITLE

3.2 Certified Test Reports: Submit certified copies of the reports of all tests required in reference publications or specified herein for the products listed hereinafter. The tests shall have been performed in a laboratory meeting the requirements of the Quality Control Section of Division 1. The tests shall have been performed within 3 years of the date of submittal of the copies. Test reports shall be accompanied by certificates

from the manufacturer certifying that the tested products are of the same type, quality, manufacture, and make as those being furnished for this project.

a. Air-Entraining Admixtures

3.3 Contractor-Furnished Mix Design: A concrete mix design with certified test reports, for each flexural strength designation of concrete included in the work, showing the results of the tests specified for the various materials and the results of the 7-day and 28-day flexural strength tests of the concrete, shall be furnished by the Contractor, approved by the Contractor Quality Control representative and submitted to the Contracting Officer for record purposes at least 30 days prior to the mixing and placing of any concrete.

4. DELIVERY AND STORAGE OF MATERIALS:

4.1 Cement: Cement shall be stored immediately upon receipt at the site of the work. Cement in bags shall be stored in a suitable waterproof structure which shall be as airtight as practicable; floors shall be elevated above the ground a distance sufficient to prevent the absorption of moisture. Bags shall be stacked close together to reduce circulation of air but shall not be stacked against outside walls; the manner of storage shall permit easy access for inspection and identification of each shipment. Bulk cement shall be transferred to elevated airtight and weatherproof bins. At the time of use, all cement shall be free-flowing, and free of lumps. Cement that has been in storage longer than 6 months will be tested by standard mortar tests or other tests as deemed necessary by the Government to determine its suitability for use and such cement shall not be used without approval of the Contracting Officer.

4.2 Aggregates: Aggregates shall be stored on areas covered with tightly laid wood planks, sheet metal, or other hard and clean surface, and in a manner that will preclude the inclusion of foreign material. Aggregates of different sizes shall be stored in separate piles. Stockpiles of coarse aggregate shall be built in horizontal layers not exceeding 4 feet in depth to minimize segregation. Should the coarse aggregate become segregated, it shall be remixed to conform to the grading requirements given hereinafter.

4.3 Admixtures: Admixtures shall be stored in a manner that will not damage the containers. An air-entraining admixture which has been in storage for longer than 6 months or which has been subjected to freezing shall not be used until retest proves it to be in conformance with the specification therefor.

5. GENERAL REQUIREMENTS: The work includes portland cement concrete pavement for the helipad. Except as otherwise specified herein for finishing of subgrade and stone base course, subgrade and stone base course construction shall be in accordance with the sections entitled "Earthwork" and "Bituminous Concrete Pavement", respectively. Joints and joint sealing, reinforcement,

and mooring eyes in concrete pavement shall be provided as specified in the section entitled "Joints, Reinforcement, and Mooring Eyes in Concrete Pavement". Pavement marking shall be in accordance with the section entitled "Marking of Airfield Pavements".

6. CONCRETE:

6.1 Contractor-Furnished Mix Design Concrete: Contractor-furnished mix design concrete shall be designed in accordance with ACI 211.1 except as modified herein and the mix design shall be as specified herein under submittals. The concrete shall have a minimum flexural strength of 650 pounds per square inch at 28 days. The air content shall be 5-1/2% ± 1-1/2 percent. The minimum cement factor and slump shall be as follows:

MINIMUM CEMENT FACTOR AND RANGE IN SLUMP

Method of finishing to be used	Minimum Cement factor, bags per cubic yard				Range in slump (inches)
	Aggregate size				
	1.0	1.5	2.0	2.5	
Machine finish, without vibration	6.6	6.3	6.0	5.7	2-3
Machine finish, with vibration	6.1	5.8	5.5	5.2	1-2
Hand tools	7.1	6.8	6.5	6.2	3-4

6.2 Cement Factors: The cement factors given in the foregoing table are minimum; if they are not sufficient to produce concrete of the flexural strength required, they shall be increased as necessary, without additional compensation under the contract. The slump will be determined by ASTM C143 and shall be within the ranges given herein; the exact slump shall be as approved by the Contractor Quality Control representatives.

7. MATERIALS:

7.1 Concrete Materials:

7.1.1 Cement shall be Type I or Type II, conforming to ASTM C150 or Type IS conforming to ASTM C595.

7.1.2 Water: Water for mixing and curing, including free moisture and water in the aggregates, shall be fresh, clean and potable. Turbidity of the water shall not exceed 2,000 parts per million. Mortar specimens made in

accordance with ASTM C87, when compared with similar mortar specimens made with water of known satisfactory quality and using the same sand and cement, shall show no unsoundness or marked change in setting, and the compressive strength of mortar specimens at 28-days shall be at least 95 percent of the compressive strength of the specimens made with water of known satisfactory quality.

7.1.3 Aggregates.

7.1.3.1 Fine Aggregate: Fine aggregate shall conform to ASTM C33, except as specified otherwise herein. Fine aggregates from different sources of supply shall not be mixed or stored in the same stock pile nor used alternately in the same concrete mix. Grading shall conform to the following:

Sieve Size	Percentage by weight passing square mesh laboratory sieves
3/8-inch	100
No. 4	95-100
No. 8	80-100
No. 16	50-85
No. 30	25-60
No. 50	10-30
No. 100	2-10

The fineness modulus shall be between 2.40 and 2.90. Aggregate which shows a variation in fineness modulus greater than 0.20 more or less than that of the representative sample submitted will be rejected unless, at the option of the Contracting Officer, it is accepted subject to such changes in the concrete proportions as may be approved by the Contractor Quality Control representative for which no change in the contract price will be made.

7.1.3.2 Alkali Reactivity: Aggregate shall be free of substances that are deleteriously reactive with the alkalies in the cement in an amount sufficient to cause excessive expansion of the concrete. Acceptability of the aggregate shall be based upon satisfactory evidence furnished by the Contractor that the aggregate is free from such materials. Such evidence shall include service records of concrete of comparable properties under similar conditions of exposure and/or certified records of tests by an approved testing laboratory. Tests shall conform to Method of Test for Potential Reactivity of Cement-Aggregate Combinations (Mortar Bar Method) ASTM C227.

7.1.3.3 Coarse Aggregate: Coarse aggregate shall conform to ASTM C227 as modified herein. The abrasion loss shall be not more than 40 percent, when the aggregate is tested in accordance with ASTM C131 or C535. In addition to the other requirements of this specification, acceptability of the aggregate shall be based upon satisfactory evidence furnished by the Contractor that

concrete of comparable properties made from similar aggregate from the same source has not produced operationally objectionable popouts, and has proven satisfactory in concrete of comparable properties which has been subjected for a period of 5 years to essentially the same conditions of exposure as those in which the aggregate is to be used and in which the cement was similar to that to be used. Grading and size of coarse aggregate shall conform to one of the following:

Aggregate size	Percentages by weight passing laboratory sieve having square openings								
(inches)	3-inch	2-1/2 inch	2-inch	1-1/2 inch	1-inch	3/4-inch	1/2-inch	3/8-inch	No. 4
1.0	--	--	--	100	95-100	--	25-60	--	0-10
1.5	--	--	100	95-100	--	35-70	--	10-30	0-5
2	--	100	95-100	--	35-70	--	10-30	--	0-5
2.5	100	90-100	--	25-60	--	0-10	0-5	--	--

Coarse aggregate, except for one-inch size shall be furnished in at least two separate sizes. The separate sizes of coarse aggregates shall be combined at the proportioning plant in proportions by weight to produce aggregates meeting the grading requirements specified.

7.1.3.4 Deleterious Substances: In lieu of Table III as given in ASTM C33, the deleterious substances in coarse aggregate shall not exceed the following precentages by weight when tested in accordance with the tests designated in ASTM C33:

	Maximum percent by weight of total sample
Clay lumps	0.25
Soft particles	1.0
Lightweight pieces	1.0 **
Material finer than No. 200 sieve	0.5 *
Flat and elongated pieces	15.0

* 1.0 percent permitted for aggregate if the fine material consists of crusher dust that is essentially free from clay or shale.

** Except for blast furnace slag in which unit weight will control.

7.1.3.4.1 A flat particle is defined as one having a ratio of width to thickness greater than 3; an elongated particle is one having a ratio of length to width greater than 3.

7.1.4 Admixtures

7.1.4.1 Air-Entraining Admixtures: Air-entraining admixtures shall conform to ASTM C260. Certification of test shall be in accordance with ASTM C233.

7.1.4.2 Chemical Admixtures: Chemical admixtures permitted by the Contracting Officer, and not specified otherwise, shall conform to ASTM C494. Calcium chloride shall not be used.

7.2 Materials for Curing Concrete:

7.2.1 Cotton Mats: Cotton mats shall conform to DDD-M-148, and shall be free from any substance which may have a deleterious effect on fresh concrete.

7.2.2 Waterproof Paper: Waterproof paper shall conform to UU-B-790, type 2.

7.2.3 Polyethylene Sheeting: Polyethylene sheeting shall be natural color and shall have a nominal thickness of 0.004-inch. The loss of moisture when determined in accordance with ASTM method C156 shall not exceed 0.055 gram per square centimeter of surface.

7.2.4 Polyethylene-Coated Waterproof Paper Sheeting: Polyethylene-coated waterproof paper sheeting shall consist of white polyethylene sheeting free of visible defects, uniform in appearance, having a nominal thickness of 0.002-inch and permanently bonded to waterproof paper conforming to UU-B-790. The loss of moisture, when determined in accordance with ASTM method C156, shall not exceed 0.055 gram per square centimeter of surface.

7.2.5 Polyethylene-Coated Burlap: Polyethylene-coated burlap shall be 4 mil white opaque polyethylene film impregnated or extruded into one side of the burlap. Burlap shall weigh not less than 9 ounces per square yard and shall conform to CCC-C-467. The loss of moisture, when determined in accordance with ASTM Method C156, shall not exceed 0.055 gram per square centimeter of surface.

7.2.6 Liquid Membrane-Forming Compound: Liquid membrane-forming compound shall conform to ASTM C309, shall be white-pigmented Type 2, and be free of paraffin.

8. SUBGRADE AND BASE COURSE:

8.1 Side Form Construction:

8.1.1 Subgrade and Base Course Planer: A planer mounted on rollers riding the forms, or previously constructed slabs, or a power grader operating between forms shall be provided for shaping the final surface of the underlying material. The power grader or power equipment used to pull the planer shall not produce ruts or indentations in the underlying material. The planer

or grader shall be equipped with a steel cutting edge or edges capable of being accurately adjusted to required cross section. When riding on previously constructed slabs, the planer shall be modified as necessary to prevent damage to surfaces or edges of the existing concrete.

8.1.2 Templates: A scratch template shall be provided and operated for checking the contour of the underlying material. The template shall be of rigid construction and shall be mounted on wheels supported on the side forms or concrete in adjacent lanes during operation. The template shall be provided with adjustable rods projecting downward to the underlying material at not more than 1-foot intervals, and these rods shall be adjusted to the required cross section of the bottom of the slab when the ends of the template are supported on the side forms or concrete in the adjacent lanes. The template shall be checked frequently during use to assure that the rods are in the correct position.

8.1.3 Subgrade and Base Course Between Forms: The underlying material shall be free of foreign matter, waste concrete, cement, and debris at all times. The underlying material shall be finished to the required section of the bottom of the pavement as shown on the drawings with equipment specified hereinbefore. The prepared surface shall be tested with template, and shall be maintained in a smooth, compacted condition, in conformity with the required section and established grade until the concrete is in place. The underlying material shall be wetted down sufficiently in advance to insure a firm, moist condition when the concrete is placed. Fine-grained material which has dried out shall be thoroughly wetted down the previous night or not less than 6 hours before placing the concrete. After the underlying material between forms has been prepared for concrete placement, no equipment shall be permitted thereon. In cold weather, the underlying material shall be prepared and so protected that it will be entirely free from frost when the concrete is placed. The use of chemicals to eliminate frost in the underlying material shall not be permitted.

8.2 Slip Form Construction:

8.2.1 Subgrade and Base Course Planer: A self-propelled planer automatically controlled for both direction and grade shall be provided for shaping the final surface of the underlying material. The planer shall be capable of being accurately adjusted to the required cross section. When riding on previously constructed slabs, the planer shall be modified as necessary to prevent damage to surfaces and edges of the existing concrete.

8.2.2 Subgrade and Base Course Preparation: The underlying material shall be finished to the required section of the bottom of the pavement as shown on the drawings. When the surface of the underlying material is to be used for grade and elevation control of the slip-form paver, the surface shall not vary more than ± 0.04 foot from the elevations shown on the drawings. When the grade and elevation control of the slip form paver is provided by a string line the surface shall not vary more than ± 0.02 foot. The prepared underlying material shall be kept free of foreign matter, waste concrete,

and/or cement and debris at all times and shall be thoroughly wetted down sufficiently in advance to insure a firm, moist condition when the concrete is placed. In cold weather the underlying material shall be prepared and so protected that it will be entirely free from frost when the concrete is placed. The use of chemicals to eliminate frost in the underlying material will not be permitted. After the underlying material has been prepared for concrete placement, no equipment will be permitted thereon unless the surface of the underlying material has been stabilized to a depth of at least 6 inches by additive to achieve sufficient strength to prevent rutting or indentation from equipment operating thereon. If any traffic has been allowed to use the prepared subgrade, the grade shall be checked and corrected immediately before the concrete is placed.

9. PROPORTIONING AND MIXING CONCRETE:

9.1 Proportioning Concrete: All concrete, except when failures of equipment or other unusual circumstances necessitate the temporary use of volumetric proportioning, shall be proportioned by weighing. Prior to the start of concrete construction, the Contractor, at his expense, shall have a mix design prepared for the concrete to be used in the work. Concrete shall be proportioned in accordance with the approved mix design.

9.2 Volumetric Proportioning: Where the failure of equipment necessitates the temporary use of volumetric proportioning, the weight proportions shall be transposed into equivalent volumetric proportions by weighing representative samples of the aggregates in the condition in which they will be measured and in accordance with ASTM C29. In determining the true volume of the fine aggregate, allowance shall be made for the bulking effect from the moisture contained therein. Suitable allowances shall also be made for variations in the moisture condition of the aggregates.

9.3 Air-Entrained Concrete: Air-entrained concrete shall be used for the Helipad paving. Air-entrainment shall be accomplished by using an air-entraining admixture. Air-entraining admixtures shall be added in solution in a portion of the mixing water by means of a mechanical batcher in a manner that will ensure uniform distribution of the agent throughout the batch. The air content of freshly mixed air-entrained concrete shall be not less than 4 or more than 7 percent of the volume of the concrete when determined by ASTM Method C231 made on samples of concrete taken during placing of the concrete on the base course except that for concrete made with slag aggregate ASTM Method C138 will be used.

9.4 Concreting Equipment: Concreting equipment shall be modern and dependable, be maintained in good condition, and shall be subject to approval of the Contracting Officer. The amount of equipment and the sizes of the units shall be adequate to meet the plan and schedule of paving operations as approved by the Contractor Quality Control representative and submitted to the Contracting Officer for record purposes. The equipment shall be assembled at

the site of the project and at a time sufficient to permit thorough inspection, calibration of weighing and measuring devices, adjustments of parts, and the making of any necessary repairs for satisfactory performance prior to the start of paving.

9.4.1 Batching Plant: Batching plant shall include batcher, bins, weighing hoppers, and weighing equipment. The structure supporting the bins and scales shall be on a firm foundation and maintained properly leveled within the accuracy necessary for the proper operation of the weighing mechanism. Separate storage bins or compartments shall be provided for fine aggregate and for each size of coarse aggregate and shall be of ample capacity and proper arrangement to preclude mixing of stored aggregates, under all working conditions. The bins and discharge gates shall be designed and arranged to facilitate free flow and efficient control of the materials entering the weighing hoppers. The weighing hoppers shall be constructed to provide for removing an overload of any one of the materials. Means of control shall be provided so that, as the quantity desired in the weighing hopper is being approached, the material may be added slowly and shut off with precision. The complete plant assembly shall include provisions to facilitate inspection of all operations at all times and shall include provisions to facilitate inspection of all operations at all times and shall be capable of ready adjustment to compensate for varying moisture content of aggregates and for changing proportions of materials. The Contractor shall provide test weights for calibrating and checking the measuring devices and shall make all corrections required to secure satisfactory performance. The batching plant shall be arranged so the weighing beam or dial is in full view of the operator and so that he may conveniently observe the operation of the gates and the discharge of the materials. The plant shall be capable of delivering quantities of aggregates within a limit of accuracy of one percent of the desired amount. If cement is to be handled in bulk, it shall be batched in a separate hopper; cement batching equipment shall be capable of delivering quantities of bulk cement within a plus or minus tolerance of 0.5 percent. Hopper for bulk cement shall be provided with a canvas tremie or curtains to prevent loss of cement when discharging into batch trucks or mixers. Cement in standard packages (bags) need not be weighed, but fractional packages shall be weighed.

9.4.2 Mixers and Agitators: Each mixer and agitator shall have attached thereto, in a prominent place, a metal plate or plates showing clearly the use for which the equipment is designed, the capacity of the drum or container in terms of the volume of mixed concrete, and the manufacturer's recommended speed of rotation of the mixing drum or blades. Mixers and agitators shall be examined daily for changes in condition due to accumulations of hardened concrete or mortar or to wear of blades. The mixer or agitator shall not be used if the slumps of individual samples of concrete, taken from time to time at approximately the one-quarter and the three-quarter points of the load, differ by more than 2 inches; however, the equipment may be used when operation with a longer mixing time or with a smaller load will permit the slump requirements to be met.

9.4.2.1 Mixers: Mixers, whether field-operated pavers, central-plant mixers, or truck mixers, shall be of the batch type. The mixing equipment shall be capable of combining the aggregates, cement, and water within the specified time into a thoroughly mixed and uniform mass, and of discharging the mixture without segregation. The mixer shall have a rated capacity of at least 27 cubic feet of mixed concrete and shall not be charged with batches greater than the manufacturer's rated capacity. The mixer shall be constructed and maintained in condition so that water or any part of the mixture will not be lost while the unit is in operation. In rotating-drum mixers, pick-up and throw-over blades which are worn down 3/4-inch or more in depth shall be replaced with new blades.

9.4.2.1.1 Field-Operated Pavers and Central-Plant Mixers: Field-operated pavers and central-plant mixers shall be single-drum or multiple-drum type. Mixers shall be equipped with a device for measuring and indicating the quantity of water entering the batch, within a range of error of not more than one percent, and the mechanism shall prevent leakage of water when the valves are closed. A vertical tank for mixing water, equipped with a gage glass, a graduated scale for reading in terms of weight, and a suitable overflow for regulating the filling of the tank, shall be provided on each mixer. A device for automatically measuring and indicating the time of mixing and an interlocking mechanism to prevent discharge of concrete before expiration of the required mixing time shall be included on the equipment. An automatic counter for indicating the number of batches handled shall be provided.

9.4.2.1.2 Truck Mixers: Truck mixers will be permitted. Each truck mixer shall have a watertight drum suitably mounted and fitted with adequate blades capable of properly combining the mixture. Measuring tanks, equipped with outside taps and valves to facilitate checking their calibration and capable of providing water within one percent of the desired amount shall be provided. All water added to the mixture shall be passed through a water meter of a type approved by the Contracting Officer. The meter shall be located between the water tank and the mixer drum; it shall be equipped with indicating dials and totalizer, and be capable of measuring and discharging a specified amount of water within an accuracy of one percent. The device shall provide means of readily verifying the amount of water added to the mix. An electrically actuated revolution counter, which shall indicate the amount of mixing, shall be provided on each mixer. An inspection opening shall be provided in each mixer, to permit ready determination of the consistency of the concrete before placing in the forms.

9.4.2.2 Agitators: Agitators shall be truck mixers operated at a speed of rotation designated by the manufacturer as agitating speed, or truck agitators. Agitators, when loaded to capacity, shall be capable of maintaining the mixed concrete in thoroughly mixed and uniform mass and of discharging the concrete at the specified slump.

9.4.3 Transportation Equipment: Vehicles used in transporting materials from the batching plant to the mixer shall have bodies or compartments of adequate capacity to carry the materials for and to deliver each batch,

separate and intact, to the mixer. Each batch compartment shall be provided with a separate section for cement for the batch. Vehicles used for transporting mixed concrete from a central mixing plant shall provide slow agitation of the concrete during transit, except that specially designed non-agitating equipment which will deliver the mixture in an unsegregated condition of uniform consistency may be used.

9.4.3.1 Non-Agitating Equipment: When non-agitating equipment is used to transport concrete, discharge shall be completed within 30 minutes after introduction of the mixing water to the cement and aggregates, except that when conditions contribute to quick stiffening of the concrete, the maximum allowable time shall be reduced as approved by the Contractor Quality Control representative. The concrete shall be delivered to the site of the work in a thoroughly mixed and uniform mass, and discharged without segregation. Concrete delivered to the site in a segregated condition shall be wasted. Bodied of non-agitating equipment shall be of metal, smooth and watertight. Watertight covers shall be used to protect the concrete being hauled when it is raining or when the prevailing air temperature is 90 degrees F or higher. Slump limitation shall be as specified hereinbefore under "Mixers and Agitators".

9.4.4 Spreaders: Where non-agitating equipment is used for transportation, concrete shall be delivered to the job site and dumped into a spreader. The spreader shall be a mechanism of a type approved by the Contracting Officer. It shall be capable of distributing concrete uniformly over the entire width of the lane being paved.

9.5 Measurements of Materials: The fine aggregate, each size of coarse aggregate, and the cement shall each be weighed separately. Cement in standard packages (bags) need not be weighed, but bulk cement or fractional packages shall be weighed. The Contractor shall furnish the necessary equipment and shall establish accurate procedures, subject to approval of the Contracting Officer, for determining the quantities of free moisture in the aggregates, the true volume of the fine aggregate if volumetric proportioning is used, and the air content of the freshly mixed concrete if air-entrained concrete is used.

9.5.1 Measurement of Chemical Admixtures: Measurement of chemical admixtures shall be accomplished by means of a device capable of ready adjustment to permit varying the quantity of admixture to be dispensed. The device shall be designed and constructed so as to measure and dispense the admixture accurately so that only the prescribed amount of admixture will enter each batch. When two or more different types of admixtures are to be added to the concrete mix, each type shall be added in such a manner as to prevent contact between or intermixing of the different admixtures prior to their being mixed with other batch materials.

9.6 Mixing and Agitation:

9.6.1 Mixing: All concrete shall be machine-mixed, except that in emergencies the mixing shall be by hand as approved by the Contractor Quality Control representatives. Mixing shall begin within 30 minutes after the cement has been added to the aggregate. The time elapsing between the introduction of the mixing water to the cement and aggregates, or the cement to the aggregate, and placing of the concrete in final position on the subbase shall not exceed forty-five minutes. Retempering of concrete, i.e., mixing with or without additional cement, aggregate, or water, will not be permitted. Excessive over-mixing requiring additions of water to preserve the required consistency will not be permitted. The entire contents of the mixer shall be discharged before recharging. A discharge of separate aggregate at the end of the batch will be rejected and such material shall be removed from the site. Concrete shall be mixed by one of the following methods:

9.6.1.1 Field-Operated Paver and Central Plant Mixing: The time of mixing after all cement and aggregates are in the mixer drum shall be not less than one minute. All mixing water shall be introduced in the drum before one-fourth of the mixing time has elapsed. The mixer drum shall rotate at a peripheral speed recommended by the manufacturer, providing that it produces a uniform mix when tested in accordance with ASTM C94.

9.6.1.2 Truck Mixing: Concrete shall be mixed and delivered in a truck mixer. Mixers shall be charged with a ribbon-fed mixture of aggregates and cement or, in the absence of facilities for ribbon feeding, the aggregates shall be charged before the cement. When mixing is begun during or immediately after charging, a portion of the mixing water, not in excess of that required to produce the minimum acceptable slump, shall be added ahead of, or with, the other ingredients. Total mixing shall be for not less than 70 nor more than 100 revolutions of the drum at the manufacturer's rated mixing speed after all ingredients, including water, are in the drum, except as follows: After 30 to 75 revolutions of the drum the slump shall be tested and additional water shall be added if necessary to produce the required slump; if additional water is necessary, mixing shall be continued for at least 20 revolutions after the water is added. Mixing speed shall be not less than 4 rpm and not more than a peripheral speed of the drum of 225 feet per minute for revolving drum mixers, and not less than 4 rpm nor more than 16 rpm for open-top mixers. Additional mixing, if any, shall be at the speed designated by the manufacturer of the equipment as agitating speed. Each batch of concrete delivered at the job site shall be accompanied by a time slip issued at the batching plant, bearing the time of departure therefrom and the signature of the inspector.

9.6.1.3 Combination Central Plant and Truck Mixing (Shrink Mixing): Concrete shall be partially mixed in a central-plant mixer and the mixing completed in a truck mixer. The mixing time in a central-plant mixer shall be the minimum required to intermingle the ingredients and shall not exceed 30 seconds. The mixing shall be completed in a truck mixer as specified hereinbefore under truck mixing.

9.6.2 Agitating of Completely Mixed Concrete: Agitating of completely mixed concrete from a central plant shall be done by an agitator or truck mixer operating at the speed of rotation designated by the manufacturer as agitating speed. Non-agitating equipment shall be used only when apparatus with specially designed bodies, and approved by the Contracting Officer, is utilized.

9.7 Ready-Mixed Concrete: For the purpose of this specification, ready-mixed concrete is defined as portland-cement concrete produced regularly by a commercial establishment and delivered to the purchaser in the plastic state. Ready-mixed concrete may be used provided that (a) the plant has sufficient capacity and transportation equipment to deliver the concrete at the rate desired so that the interval between batches of a pour shall not exceed 30 minutes and (b) the plant meets the requirements specified hereinbefore for equipment, measurement of materials, mixing, and agitation.

10. FORMS:

10.1 General Requirements: Forms shall be constructed of metal, except that flexible or curved forms may be of metal or wood. Flexible or curved forms shall be used on curves having a radius of 150 feet or less and for fillets. Forms shall be of the full depth of the concrete and of a strength, when staked, sufficient to resist the pressure of the concrete and the loads resulting from the finishing operations without springing, settling, or losing their shape. All forms shall be free of bulge and warp, and shall be cleaned thoroughly before being reused.

10.1.1 Side Forms: Before placing side forms, the underlying material shall be at the proper grade. Side forms shall have full bearing upon the foundation throughout their length and width of base and shall be placed to the required grade and alignment of the edge of the finished pavement. They shall be so supported during the entire operation of placing, compacting, and finishing the pavement that they will not deviate vertically at any time more than 0.01-foot from the grade required to provide the pavement at the elevations indicated on the drawings. The maximum vertical deviation of the top of any side form, including joints, shall not exceed 0.01-foot from a 12-foot straightedge, nor shall the inside face vary more than 0.02-foot from a 12-foot straightedge. Stake pockets and interlocking devices shall be in such condition that they will prevent movement of the form.

10.1.1.1 Immediately in advance of placing pavement and after all base course operations are completed, side forms shall be trued and maintained to the required line and grade for distance sufficient to prevent delay in placing the pavement.

10.2 Metal Forms: Metal forms shall be free from irregularities, dents, and sags. The top face of the form shall not vary from the plane of the face by more than one-eighth inch in 10 feet, and the lateral variation shall be not greater than one-fourth inch in 10 feet.

10.3 Wood Forms: Wood forms shall be made of well-seasoned lumber of plank grade. Planks shall have a nominal thickness of not less than 2 inches and shall not vary on their edges more than one-eighth inch in 5 feet from the plane of the curve indicated on the drawings. The top face of the form shall not vary from the plane of the face by more than one-eighth inch in 10 feet.

10.4 Setting and Removing Forms Not Specified Otherwise: The forms shall be joined neatly and tightly, shall be staked securely to line and grade, and shall be braced firmly throughout. Where practicable, forms shall be set at least 500 feet in advance of the point where concrete is being placed. Forms shall be oiled thoroughly before concrete is placed against them. Forms shall remain in place for at least 12 hours after concrete has been placed against them; until the end of the curing period, the sides of the pavement shall be protected with moist earth or by other methods approved by the Contractor Quality Control representative. The forms shall be removed in a manner to preclude damaging the concrete.

11. SLIP-FORM CONSTRUCTION (CONTRACTOR'S OPTION):

11.1 Paving Equipment: Slip-form paving equipment shall be equipped with traveling side forms of sufficient dimensions, shape, and strength to support the concrete laterally for a sufficient length of time during placement to produce pavement of the required cross section. The equipment shall spread, consolidate, screed, and float-finish the freshly-placed concrete in such a manner that a minimum of finishing with a hand float as specified herein to provide a dense and homogenous pavement.

11.2 Slip-Form Construction: Concrete shall be distributed uniformly into final position by the slip-form paver without delay. The concrete, for the full paving width, shall be effectively consolidated by internal vibration with transverse vibrating units or a series of longitudinal vibrating units. If a series of longitudinal vibrating units are used, they shall be spaced at intervals not to exceed 2-1/2 feet, measured center to center.

11.2.1 Internal Vibration: The term "internal vibration" specified hereinbefore shall be construed to mean vibration by means of vibrating units located within the indicated thickness of pavement section and a minimum distance ahead of the screed equal to the pavement thickness. The rate of vibration of each vibrating unit shall be not less than 5,000 vibrations per minute, and the amplitude of vibration shall be sufficient to be perceptible on the surface of the concrete along the entire length of the vibrating unit and for a distance of at least one foot therefrom. The Contractor shall furnish a tachometer or suitable device for measuring and indicating the actual frequency of vibrations.

11.2.2 When concrete is being placed adjacent to an existing pavement, that part of the equipment which is supported on the existing pavement shall be equipped with protective pads on crawler tracks or rubbertired wheels on

which the bearing surface shall be offset to run a sufficient distance from the edge of the pavement to avoid breaking or cracking the pavement edge.

11.2.3 Alignment: No abrupt changes in longitudinal alignment of the pavement will be permitted. The horizontal deviation shall not exceed 0.10 foot from the alignment established by the Contractor Quality Control representative. Horizontal alignment shall be referenced to a taut stringline or the edge of a previously placed lane of concrete. Vertical alignment shall be referenced to a taut stringline or the surface of the underlying material.

11.3 Widths Less Than a Traffic Lane: Concrete required to be placed in widths less than a traffic lane may be compacted and shaped by a powered mechanical compacting and shaping machine, supplemented by hand methods as necessary. Where hand compaction is performed, the tamper shall be constructed of a heavy plank whose length exceeds the width of pavement by a minimum of one foot; shall be shod with a heavy strip of metal for a tamping surface; and shall be stiffened adequately to maintain the required shape during use. For concrete production in excess of 40 cubic yards per hour, and where all compaction is performed by hand methods, not less than two tampers shall be used.

11.4 Locations Inaccessible to Slip-Form Paving Equipment: Locations inaccessible to slip-form paving equipment shall be constructed as specified herein under "Conveying and Placing Concrete".

12. CONVEYING AND PLACING CONCRETE:

12.1 Conveying: Concrete shall be conveyed from the mixer to grade as rapidly as practicable by methods approved by the Contractor Quality Control representative. Methods used shall not cause segregation or loss of ingredients. Concrete shall be deposited as nearly as practicable in its final position to avoid rehandling. At any point in conveying, the free vertical drop of the concrete shall not exceed 3 feet. Chuting will be permitted only where the concrete is deposited into a hopper before it is placed in its final position. Conveying equipment shall be cleaned thoroughly before each run. All concrete shall be deposited as soon as practicable after the forms have been oiled. Concrete which has segregated in conveying or which is not protected from rainwater during a rain storm or rainy weather shall not be used.

12.2 Placing: Concrete shall be placed before the initial set. Concrete placing equipment shall be subject to approval of the Contracting Officer. Placing methods shall be subject to approval of the Contractor Quality Control representative. Concrete placement will not be permitted when weather conditions prevent proper placement and consolidation. Drainage ditches, gutters, and side drains shall be maintained in a condition to drain the subbase properly during the construction of the pavement. Before placing concrete on porous subgrades or bases, they shall be dampened as approved by the Contractor Quality Control representative. The concrete shall be placed in one continuous operation for the full depth and width of the section

between transverse joints. Concrete shall be deposited in a manner that will require a minimum of handling. In case the mixer breaks down the concrete shall be mixed by hand to complete the section to the following joint, or the concrete shall be removed as specified herein.

If the breakdown occurs within 7 feet of a previously placed expansion or contraction joint, the concrete shall be removed back to the joint. If the breakdown occurs more than 7 feet from a previously placed expansion or contraction joint, a transverse contraction joint shall be placed at the point of stopping. Spreading concrete by hand shall be done with shovels; rakes shall not be used. Workmen shall be required to remove all dirt or mud from their footwear before stepping into freshly deposited concrete. Holes left on removing any material or device used in constructing joints shall be filled immediately with concrete from the last batch deposited. Special attention shall be given to the concrete at joints and along forms to insure that the concrete is compacted thoroughly. All work incident to the handling and placing of concrete shall be done in a manner that will not damage the underlying surface.

12.3 Vibration: The concrete adjacent to forms and joints, regardless of slab thickness, and the concrete slabs 10 inches or more in thickness shall be consolidated immediately after spread, with vibrating equipment approved by the Contracting Officer or his authorized representative. The concrete adjacent to edge forms and joints shall be thoroughly vibrated. The duration of vibration shall be limited to that necessary to produce satisfactory consolidation of the concrete. Excessive vibration will not be permitted. Vibrators shall not be operated in the concrete at one location for more than 20 seconds. At the option of the Contractor, vibrating equipment of a type approved by the Contracting Officer or his authorized representative may be used to compact the concrete in unreinforced pavement slabs less than 10 inches thick.

12.3.1 Vibrating Equipment: Vibrating equipment shall be of the internal type, and other than of hand-manipulated equipment, and shall be operated ahead of the front of the finishing machine. The equipment shall be adequate in number of vibrating units and power of each unit to properly consolidate the concrete. The vibrating units shall be mounted on a frame that is capable of vertical movement and, when necessary, radial movement, as the vibrators may be operated at any desired depth within the slab, or completely withdrawn from the concrete. The clear distance between frame-mounted vibrating units that have tubes that extend into the slab at intervals across the paving lane shall not exceed 30 inches. Vibrators of this type shall be inserted into the concrete to a depth that will provide the best compaction, but no closer than 2 inches to the subgrade. The distance between frame-mounted vibrating units that have fixed vibrating tubes extending horizontally across the paving lane and operating at a fixed distance below the surface of the concrete shall not exceed 4 inches. The distance between the end of the vibrating tube and the side form shall not exceed 2 inches. Vibrating tubes of this type shall be inserted into the concrete to approximately the midpoint of the slab thickness and maintained at

this elevation during operation. The vibrators may be pneumatic, gas driven, or the electric type, and shall be operated at frequencies of not less than 5,000 impulses per minute. The amplitude of vibration shall be such that noticeable vibrations occur at 1.5-foot radius when the vibrator is inserted in the concrete to the depth specified.

12.4 Placing Concrete in Cold Weather: Except when authorized specifically by the Contracting Officer, concrete shall not be placed when the air temperature in the shade and away from artificial heat falls below 40 degrees F, or when the concrete without special protection is likely to be subjected to freezing temperatures before the expiration of the specified curing period. Concrete shall not be placed on frozen or muddy subgrade. When the concrete is likely to be subjected to freezing temperatures within 24 hours after it has been deposited, or when so directed, concrete materials shall be heated so that the temperature of the concrete when deposited shall be between 65 and 80 degrees F. Methods of heating materials shall not cause deleterious effects to the concrete. Water for mixing shall not be heated above 165 degrees F. The air in contact with the concrete shall be maintained at a temperature of not less than 50 degrees F for a period of 72 hours after placing, and at a temperature above freezing for the remainder of the curing period. Aggregates shall be free from snow, ice, and frozen lumps before being placed in the mixer. Calcium chloride shall not be used. Concrete damaged by freezing shall be removed and replaced at no additional cost to the Government.

12.5 Placing Concrete in Hot Weather: In hot weather, extra care shall be taken to reduce the temperature of the concrete being placed and to prevent rapid drying of newly placed concrete. When the outdoor ambient temperature is more than 90 degrees F, the following shall apply: the temperature of the concrete as placed shall not exceed 90 degrees F, the fresh concrete shall be shaded as soon as possible after placing, and curing shall be started as soon as the surface of the fresh concrete is sufficiently hard to permit it without damage. Forms and subgrade shall be water cooled as required; subgrade may be cooled by sprinkling lightly with water.

13. FINISHING CONCRETE:

13.1 General Requirements: Finishing operations shall be started immediately after placement of concrete. Finishing of concrete shall be done by a finishing machine, except that hand finishing may be used in emergencies and for concrete slabs in inaccessible locations or of such shapes that machine finishing is impracticable. The surface of the pavement on both sides of a joint shall be finished to the same grade. The finishing of formed joints shall be done from a bridge. Hand finishing equipment shall be available for use at all times. Finishing equipment and tools shall be maintained clean, free from hardened concrete or grout, and in a satisfactory condition.

13.2 Side Form Finishing: Concrete, as soon as placed, shall be struck off and screeded to the required crown and cross-section of the pavement by a power-driven transverse finishing machine. The elevation of the concrete shall be such that, when consolidated and finished, the surface of the pavement will be adequately consolidated and at the required grade. The finishing machine shall be equipped with two screeds readily and accurately adjustable for changes in pavement crown and compensation for wear and other causes. It shall make as many trips over each area of pavement and at such intervals as necessary to give the proper compaction, retain the coarse aggregate near the finished surface, and produce a surface of uniform texture, true to grade and crown. Excessive operation over an area, which results in an excess of mortar and water being brought to the surface, will not be permitted. The last trip for a given area shall be a continuous run of at least 40 feet. The tops of the forms shall be kept clean by a device attached to the machine, and the travel of the machine on the forms shall be maintained true without lift, wobbling, or other variation tending to affect the precision of finish. During the first pass of the finishing machine, a uniform ridge of concrete at least 4-inches deep shall be maintained ahead of the front screed for its entire length. Except when making a construction joint, the finishing machine shall not be operated beyond that point where the 4-inch ridge can be maintained ahead of the front screed. At formed joints, the finishing machine shall be moved forward until the front screed is approximately 8 inches beyond the joint. Segregated coarse aggregate shall be removed from both sides of and off the joint. The front screed shall be lifted, the machine started, and the front screed brought directly over the joint, set upon it, and the forwarding motion of the finishing machine resumed. When the second screed is close enough to permit the excess mortar in front of it to flow on to the joint, the screed shall be lifted and carried over the joint. When the second pass of the finishing machine is made, it may be run over the joint without lifting the screeds, provided there is no segregated coarse aggregate immediately between the joint and the screed or on top of the joint. After concrete has been placed on both sides of the joint and struck off, and as soon as the concrete is sufficiently hardened, the installing bar or channel cap shall be slowly and carefully withdrawn, the concrete shall be finished neatly and additional freshly mixed concrete worked into any depressions left by the removal of the installing bar. Any edge slump of pavement, exclusive of edge rounding, in excess of 0.02 foot shall be corrected before the concrete has hardened. Finished concrete surface on each side of construction joints shall be in the same plane; all deviations shall be corrected before the newly placed concrete has hardened. Slip-form finishing shall be as specified hereinafter.

13.3 Hand Finishing: The surface of the concrete shall be struck off and screeded to elevations slightly above finished grade so that when consolidated and finished the surface of the pavement shall be at the elevation indicated. The entire surface shall then be vibrated or tamped and the operation continued until the required compaction and reduction of surface voids is secured with a strike-off or tamping templet constructed to produce the pavement surfaced cross-section indicated. The templet shall be approximately 2 feet longer than the pavement width, shall be of metal or of other

suitable material shod with metal, and shall be rigidly constructed to retain its shape under all working conditions, it shall be moved forward on the forms with a combined longitudinal and transverse shearing motion, moving always in the direction in which the work is progressing and so manipulated that neither end is raised from the side forms during the striking off process.

13.4 Longitudinal Floating: Following the initial finishing, the concrete shall be further smoothed and consolidated by means of an appropriate finishing machine using one of the following methods:

13.4.1 Mechanical Method: The appropriate finishing machine shall be of a design approved by the Contracting Officer and shall be in good working condition. The tracks from which the float operates shall be adjusted accurately to the required crown. The float shall be accurately adjusted and coordinated with the adjustments of the finishing machine so that a small amount of mortar is carried ahead of the float at all times. Adjustment of the machine shall be such that in the forward movement the float will advance by not less than one-half the float length on each transverse trip. The float shall pass over each area of pavement at least twice, but excessive operation over a given area will not be permitted. Any excess water or soupy material shall be wasted over the side forms on each pass. In lieu of the foregoing, the Contractor may use a machine composed of a cutting and smoothing float, or floats, suspended from and guided by a rigid frame. The frame shall be carried on four or more visible wheels riding on, and constantly in contact with, the side forms.

13.4.2 Hand Method: The hand-operated longitudinal float shall be not less than 12 feet long and 6 inches wide, properly stiffened to prevent flexing and warping. Operated from foot bridges resting on the side forms and spanning but not touching the concrete, the float shall be worked with a sawing or wiping motion while it is kept parallel with the direction of paving, passing gradually from one side of the pavement to the other. Movement ahead along the centerline of the pavement shall be in successive advances of not more than one-half the length of the float. Any excess water or soupy material shall be wasted over the side forms on each pass.

13.5 Slip-Form Finishing: After the concrete has been given a preliminary finish by means of finishing devices incorporated in the slip-form paving equipment, the surface of the fresh concrete shall be checked by the Contractor with a straightedge device not less than 14 feet long. High areas indicated by the straightedge device shall be removed by the hand float method specified hereinbefore. Each successive check with the straightedge device shall lap the previous check path by at least one-half the length of the straightedge. Any edge slump of the pavement, exclusive of edge rounding, in excess of 0.02-foot shall be corrected before the concrete has hardened. Finished concrete surface on each side of construction joints shall be in the same plane; all deviations shall be corrected before the newly placed concrete has hardened. Slip-form construction shall be as specified hereinbefore.

13.6 Straightedge Finishing: After completion of the longitudinal floating, any excess water or laitance shall be removed from the surface of the pavement transversely with a 10-foot straightedge or, where the use of a straightedge is not practicable, with a long-handled wood float having a blade not less than 5 feet in length and 6 inches in width. Successive transverse drags of either tool shall be lapped one-half the length of the blade. The long-handled wood float may be used behind the longitudinal float to correct surface unevenness not taken care of by the longitudinal float, but the wood float shall not be used to float the entire surface of the pavement in lieu of, or supplementing, the use of the longitudinal float, except that when strike-off and consolidation are done by the hand method and the crown of the pavement will not permit the use of the longitudinal float, the surface shall be floated transversely by means of the wood float; care shall be taken not to work the crown out of the pavement during the operation.

13.7 Straightedge Testing: After the longitudinal floating has been completed and the excess water removed, but while the concrete is still plastic, the slab surface shall be tested with an accurate 10-foot straightedge swung from handles 3 feet longer than one-half the width of the slab. The straightedge shall be held in successive positions parallel to the centerline of the slab in contact with the surface of the concrete, and the whole slab area shall be gone over from one side of the slab to the other as necessary. Advance along the centerline of the slab shall be in successive stages of not more than one-half the length of the straightedge. All depressions shall be filled immediately with freshly mixed concrete, struck off, consolidated, and refinished. High areas shall be cut down and refinished. Straightedge testing and surface correction shall continue until the entire surface is within the tolerance specified.

13.8 Burlap Drag Finish: Burlap drag finish shall be applied to the Helipad paving. Just before the concrete becomes non-plastic, the surface of the slab shall be finished by dragging over it a strip of clean, wet burlap from 3 to 10 feet wide and 2 feet longer than the pavement width. The dragging shall be done in a manner to produce a finished surface having a fine granular or sandy texture without leaving disfiguring marks.

13.9 Edging: When the concrete has attained a degree of hardness suitable for edging, all slab edges, including those at formed joints, shall be finished carefully with an edger having a radius not greater than one-eighth inch. Corners or edges of slabs which have crumbled and areas which lack sufficient mortar for proper finishing shall be cleaned by removing all loose fragments and soupy mortar and shall be filled solidly with a mixture of suitable proportions and consistency and finished. Unnecessary tool marks shall be eliminated, all edges shall be eliminated, and all edges shall be smooth and true to line. The tools, methods, and workmanship shall produce a joint having edges of the same quality of concrete as the other portions of the pavement. After removal of forms, all damaged and honeycombed areas shall be filled with mortar composed of one part portland cement to two parts sand.

14. CURING AND PROTECTION:

14.1 General Requirements: Concrete shall be protected adequately from injurious action by the sun, rain, flowing water, frost, and mechanical injury, and shall not be allowed to dry out from the time it is placed until the expiration of the minimum curing periods specified hereinafter. As soon as the finishing is completed and the concrete has hardened enough to prevent the surface being marred by the curing material, curing shall be accomplished by one of the following methods, except that membrane-forming curing shall not be used on pavement surfaces to be painted. All water used for curing shall be fresh water. All portions of the pavement shall be kept moist and at a temperature of not less than 50 degrees F, for the full curing periods specified hereinafter, and all portions of the time during which either moisture or warmth is lacking shall not be counted effective for curing. Pavement shall be protected from damage during the removal of form work and from injury resulting from the storage or movement of materials and equipment during construction. Exposed vertical faces of concrete shall be protected by curing compound or by other suitable means. During cold weather, initial curing shall be accomplished by use of waterproof paper blankets as specified herein.

14.2 Moist Curing:

14.2.1 Mats: The entire surface of the pavement shall be covered with two thicknesses of wet burlap weighing not less than 7 ounces per square yard (dry weight), cotton mats, or other suitable material having a high absorptive quality. The material shall be thoroughly wet when applied and shall be kept continuously wet during the time it remains on the pavement. Mats shall be made of clean material which is free from any substance which will have a deleterious effect on the concrete; they shall be at least as long as the width of the pavement under construction plus four times its edge thickness. During application, the mats shall not be dragged over the finished concrete nor over mats already placed; they shall be placed so as to provide complete coverage of surface and edges of the pavement with a slight overlap over adjacent mats. These mats shall be left in place not less than 8 hours when they may be removed and curing continued by the straw curing method specified hereinafter, or they may be left in place for a total of 72 hours during which time they shall be kept wet continuously.

14.2.2 Waterproof Paper Blanket: The surface of the concrete shall be thoroughly wetted with a fine spray of water and then covered with waterproof paper, polyethylene-coated burlap, or polyethylene sheeting. The burlap or polyethylene-coated burlap shall be thoroughly saturated with water before placing. The sheets shall be at least 1 foot longer than necessary to cover the entire width and edges of the slab. The sheets shall be placed with the light-colored side up. Adjacent sheets shall overlap not less than 12 inches with the lapped edges securely weighted down or the sheets shall be lapped 6 inches and cemented or taped to form a continuous cover and a completely closed joint. The covering shall be adequately weighted down to prevent displacement or billowing from winds. Coverings shall be folded down over exposed edges of the pavement and secured by a continuous bank of earth or

other approved means. The covers shall be in good condition when placed, and any tears and holes appearing in coverings during the period shall be repaired immediately by patching.

14.3 Impervious-Sheeting Curing: The entire exposed surface shall be wetted thoroughly with a fine spray of water and then covered with (a) waterproofed paper, (b) polyethylene-bonded waterproof paper sheeting, (c) polyethylene-coated burlapsheeting, or (d) polyethylene sheeting conforming to the requirements as specified hereinbefore. Sheets shall be laid directly on the concrete surface and overlapped 12 inches when a continuous sheet is not used. The curing medium shall be not less than 18 inches wider than the concrete surface to be cured, and shall be securely weighted down by placing a bank of moist earth on the edges just outside the forms and over the transverse laps to form closed joints. Sheets shall be satisfactorily repaired or replaced if torn or otherwise damaged during curing. The curing medium shall remain on the concrete surface to be cured for not less than 7 days.

14.4 Liquid Membrane-Forming Compound Curing: Liquid membrane-forming compound curing shall be accomplished by applying the compound specified hereinbefore, over the concrete surface to restrict evaporation of the mixing water. All joint openings shall be sealed at the top by inserting moistened paper or fiber rope or covering with strips of waterproof material prior to application of the curing compound, in a manner to prevent the curing compound from entering the joint. Seven days following the placing of the liquid membrane-forming compound shall be considered as the end of the curing period and the basis for determining when joint sealing material will be placed in joints.

14.4.1 Application of Curing Compound: The compound shall be applied immediately after the surface loses its water sheen and has a dull appearance. Curing compound shall be agitated thoroughly by mechanical means during use and shall be applied uniformly in a 2-coat continuous operation by power-spraying equipment. The total coverage for the two coats shall be between 150 and 200 square feet per gallon of compound. The compound shall form a uniform, continuous, coherent film that will not check, crack, or peel and shall be free from pinholes or other imperfections. An additional coat of the compound shall be applied immediately to areas where the film is defective. Impervious sheet curing material shall be kept readily available for use to protect the freshly placed concrete in the event conditions occur which prevent correct application of the compound at the proper time. Concrete surfaces that are subjected to heavy rainfall within 3 hours after the curing compound has been applied shall be resprayed with two coats of curing compound by the method and at the foregoing coverage at no additional cost to the Government.

14.4.2 Protection of Treated Surfaces: Concrete surfaces to which liquid membrane-forming compounds have been applied shall be kept free from all foot and vehicular traffic and all other sources of abrasion for not less than 72 hours. Continuity of the coating shall be maintained for the entire curing period and any damage to the coating during this period shall be repaired immediately.

14.5 Special Requirements for High-Early-Strength Portland Cement Concrete: The minimum periods of maintaining temperatures above freezing when concrete is placed in freezing weather shall be not less than one-quarter of those specified herein for portland-cement concrete, but in no case less than 48 hours.

14.6 Pavement Protection: The pavement shall be closed to vehicle traffic until the concrete is not less than 7 days old and has attained a minimum flexural strength of 450 pounds per square inch as determined by tests of the field-cured test beams. When the breaking of test beams indicates that a flexural strength of 450 psi has been reached and the concrete is more than 7 days old, the pavement may be opened to limited traffic, and the subgrade planer, concrete finishing machine, and similar equipment may be permitted to ride upon the edges of previously constructed slabs, provided that adequate means are employed to prevent damage to the edges of the slab. Wheel loads exceeding 5000 pounds shall not be allowed on the pavement until the specified flexural strength of the pavement has been reached. The pavement shall not be used at any time for batch haul to the concrete mixer or for transporting or operating heavy equipment, except by specific approval in writing of the Contracting Officer.

14.7 Pavement Identification: The contract number and the date of construction shall be indented in the concrete at each end and at every 1000 ft. of pavement or part thereof. The letters and numbers shall be a minimum height on one and one-half inches. The width of the indentations at the surface of pavement shall be not less than 1/4-inch. The indentations shall have a slight bevel and a depth of not less than 1/8-inch.

15. SAMPLING AND TESTING:

15.1 Conducting Sampling and Testing: All sampling and testing as specified hereinafter shall be conducted by the Contractor Quality Control representative, and shall be done at the expense of the Contractor. All materials shall be approved by the Contractor Quality Control representative and submitted to the Contracting Officer for record purposes not less than 30 days prior to the use of such materials in the work.

15.2 Sampling:

15.2.1 Sample Identification: Each sample shall be tagged for identification. The tag shall contain the following information:

Contract No. _____
Sample No. _____
Date of Sample _____
Sampler _____
Source _____
Intended Use _____
For Testing _____

15.2.2 Aggregates: Prior to delivery of aggregates, at least one initial sample shall be taken from each stockpile by the Contractor Quality Control representative. Each sample shall be collected by taking three incremental samples at random from the stockpile to make a complete sample of not less than 50 pounds.

15.2.3 Concrete: Samples of wet concrete shall be collected during each working day as often as required to perform the specified tests. Concrete samples shall be of proper size to permit making the required test specimens.

15.3 Testing:

15.3.1 Aggregate Testing: Gradation tests in accordance with ASTM C136 shall be made on each sample without delay. All other aggregate tests required by this specification shall be made on the initial source samples, and shall be repeated whenever there is a change of source. The tests shall include an analysis of each grade of material and an analysis of the combined material representing the aggregate part of the mix. The Contracting Officer may request or make additional tests at random, at the expense of the Government.

15.3.2 Cement Testing: Cement testing will be performed by the Government through the facilities of the U.S. Army Corps of Engineers' Cement and Pozzolan Procurement Testing Service. Tests on cement will be waived and mill certificates accepted when the total amount of each type of cement to be used on the project is less than 230 barrels.

15.3.3 Concrete Testing: Aggregates and cement to be used in the project shall be used in making all tests. During the course of construction, if there is a deficiency in strength of the concrete produced, additional tests at the Contractor's expense shall be made and an adjustment in the mix shall be made, as required, to obtain the specified strength.

15.3.3.1 Testing Consistency of Concrete Slump: Testing consistency of concrete slump shall be determined in accordance with ASTM C143. Consistency may be determined in the field by means of the ball-penetration method in accordance with ASTM C360 after a correlation between slump and ball penetration is determined. Tests to verify the ratio will be made at least once each working day. Consistency of concrete shall be determined for each strength test sample obtained.

15.3.3.2 Air Content of Concrete: Air content of concrete shall be determined for each strength test sample obtained. Method of determining air content of concrete shall be in accordance with ASTM C231, except that ASTM C138 or C173 shall be used where concrete is made with slag aggregate.

15.3.3.3 Yield Tests: Yield tests shall be made by the absolute volume method as outlined in PCA Concrete Paving Inspectors Manual. Yield tests shall be made whenever materials or mix proportions are changed.

15.3.3.4 Temperature Tests: Temperature tests shall be made during hot and cold weather periods, at frequent intervals, until satisfactory control is established.

15.3.3.5 Tests for Flexural Strength: The flexural strength required will be verified during the progress of the work by testing beams made from concrete taken from the forms at intervals as directed by the Contractor Quality Control representative. The making and curing of the beams will be in accordance with ASTM method C31. Testing will be in accordance with ASTM specification C78. Two beams from at least three locations, and taken near the beginning, the midway, and near the end of placement, will be made for each days pour. A minimum of 6 beams will be made of concrete placed in any one day. Necessary labor and facilities shall be furnished for making and for handling and storing the beams at the site of the work. The Contractor Quality Control representative shall mold, ship, and test the beams. Tests shall be made at 7 days and 28 days, using one set of the beams from the various locations for each test. The flexural strength of the concrete shall meet the following requirements: (1) Each group of concrete beams, tested at the end of 28 days, shall have an average flexural strength equal to or greater than the flexural strength specified herein; (2) Not more than 12 percent of the beams taken from concrete of each day's placement tested at the end of 28 days shall have a flexural strength less than 85 percent of the strength specified. Specimens which are obviously defective shall not be considered in the determination of the strength. When a satisfactory relationship between 7-day and 28-day strengths has been established and approved by the Contractor Quality Control representative the 7-day test results may be used as an indication of the 28-day strengths. If test results of any concrete to be used in the project show that the concrete strength is below the specified limits and does not meet other requirements of this specification, the Contractor shall make all necessary adjustments, as approved by the Contractor Quality Control representative at the Contractor's expense. Concrete which at the end of 28 days does not meet the specified strength shall be removed or otherwise corrected at the Contractor's expense, with corrective methods subject to the approval of the Contracting Officer or his authorized representative.

15.3.3.6 Surface Test: After curing, the surface of the pavement shall be tested with a straightedge or device which shall be operated in a manner to reveal any irregularities. Any portion of the pavement which shows irregularities greater than one-eighth inch in 10 feet shall be removed and replaced or corrected as approved by the Contracting Officer or his authorized

representative. Where defective areas of pavement are removed and replaced, the portion of the slab which remains in the pavement abutting the replacement slab shall have length and width not less than 10 feet from the nearest edge or joint.

---END---

SECTION 02614. JOINTS AND MOORING EYES IN CONCRETE PAVEMENTS

1. APPLICABLE PUBLICATIONS: The following publications of the issues listed below, but referred to elsewhere by basic designation only, form a part of this specification to the extent indicated by the references thereto:

1.1 Federal Specifications:

SS-S-1401B	Sealing Compound, Hot-Applied, for Concrete and Asphalt Pavements.

1.2 American Society for Testing and Materials (ASTM):

A108-73	Cold-Finished Carbon Steel Bars and Shafting.
D1751-73	Preformed Expansion Joint Fillers for Concrete Paving and Structural Construction. (Nonextruding and resilient bituminous types).
D2628-69(1976)	Preformed Polychlorophene Elastomeric Joint Seals for Concrete Pavements.

2. DELIVERY AND STORAGE: Materials delivered to site shall be inspected for damage, unloaded and stored with the minimum of handling. Liquid joint seals and lubricant-adhesive shall be delivered in original sealed containers. Store adhesive at a temperature of 50 to 80 degrees Fahrenheit. Preformed joint fillers shall be stored in a manner to maintain straightness and avoid damage.

3. MATERIALS:

3.1 Mooring Eyes: Mooring eyes shall be as shown on the drawings, and shall be plain bars conforming to ASTM A108 having a minimum yield strength of 40,000 pounds per square inch.

3.2 Preformed joint filler shall be nonbituminous type conforming to ASTM D1752, except as otherwise permitted herein. Bituminous type joint filler conforming to ASTM D1751 may be used provided that it is a material certified to be compatible with the joint sealing material specified, or provided that the preformed joint filler and the joint sealer are separated by a barrier sheet such as hydrocarbon-resistant adhesive-backed tape, butyl rubber sheet, or other appropriate compatible non-absorptive sheet.

3.3 Extruded Neoprene Joint Seal: Extruded neoprene joint seal shall be a preformed, vulcanized, elastomeric compound using neoprene as the sole polymer. It shall be resilient, and shall be resistant to jet blast, heat, oil, flame, ozone, gasoline, salt, and abrasion. The seal material shall conform to the physical requirements of ASTM D2628, except that specimens for the high-temperature recovery test shall be tested as received, without talc dusting. Width of the seal shall be 7/16-inch prior to installation in contraction joints. Minimum depth of the seal shall be 3/4-inch for contraction joints. The cross-section of the seal shall be as indicated.

3.3.1 Lubricant-Adhesive: Lubricant-adhesive for use with extruded neoprene joint seal shall be as recommended by the sealant manufacturer. Lubricant-adhesive not used within 270 days of its manufacture will be rejected.

3.4 Joint Sealers: Joint sealers shall conform to SS-S-1401.

4. EQUIPMENT:

4.1 General Requirements: All machines, tools, and other equipment used in performance of the work shall be maintained in a satisfactory working condition at all times. The Government reserves the right to order the discontinuance of the use of any equipment which, in the opinion of the ~~Contractor's Quality Control Representative~~ Contracting Officer, will fail to produce satisfactory work.

4.2 Certification of Equipment: The Contractor shall submit a certificate stating that the application equipment used in performance of the work is the type recommended and approved by the suppliers of the materials used.

4.3 Joint Cleaning Equipment:

4.3.1 Sandblasting Equipment: Sandblasting equipment shall include an air compressor, hose, and venturi-type nozzles of proper size, shape, and opening. The air compressor shall be capable of furnishing not less than 125 cubic feet of air per minute at a pressure of not less than 90 pounds per square inch at the nozzle. The compressor shall be equipped with traps that will maintain the compressed air free of oil and water. The nozzle or nozzles shall have an adjustable guide that will hold the nozzles aligned with the joint about 1 inch above the pavement surface. The height, angle or inclination, and size of the nozzles shall be adjusted as necessary to secure satisfactory results.

4.3.2 Concrete Saw: A self-propelled power saw with diamond or abrasive saw blades shall be provided for cleaning sawed joints and for removing fiber-board filler embedded in the joints to the depth indicated or adhering to the joint faces.

4.4 Joint Sealing Equipment:

4.4.1 Hot-Poured Sealer: The unit applicators used for heating and installing hot-poured sealing materials shall be mobile and shall be equipped with a double-well agitator type kettle with an oil medium in the outer space for heat transfer, a direct-connected pressure-type extruding device with nozzle or nozzles shaped for insertion in the joints to be filled, positive temperature devices for controlling the temperature of oil and sealer, and a recording type thermometer for indicating the temperature of the sealer. The

applicator unit shall be so designed that the sealer will circulate through the delivery hose and return to the inner kettle when not sealing joints.

4.4.2 Extruded Neoprene Joint Sealers: Preformed joint sealers shall be placed by suitable equipment recommended by the sealer manufacturer. Such equipment shall be capable of installing the sealer so that its vertical axis is parallel to the joint sides.

5. INSTALLATION:

5.1 Setting Mooring Eyes: Mooring eyes shall be set accurately, plumb, square, and flush with the top of the slab. Depressions shall be finished to neat true uniform surfaces. The spacing of mooring eyes shall be as indicated on the drawings.

5.2 Joints:

5.2.1 General Requirements: All joints shall form a regular rectangular pattern in all areas and shall conform to the details shown on the drawings. Wherever curved pavement edges occur, all joints shall be made to intersect the tangents to the curve at right angles. Transverse joints shall be in a continuous straight line extending from edge to edge of pavement through all lanes in the paved area. Longitudinal joints in abutting pavements shall not be staggered. Formed joints shall be protected from curing compounds by covering with tape or by other appropriate means. Necessary precautions shall be taken to ensure proper curing at the joints.

5.2.2 Sawing of Joints: The time of sawing shall be varied, depending on existing and anticipated weather conditions, and shall be such as to prevent uncontrolled cracking of the pavement. Sawing of the joints shall commence as soon as the concrete has hardened sufficiently to permit cutting the concrete without chipping, spalling, or tearing. If early sawing is the cause for undercutting or washing of the concrete and the action is sufficiently deep to cause structural weakness or excessive cleaning difficulty, the sawing operation shall be delayed. The sawing operation shall be carried on both during the day and at night as required regardless of weather conditions. Alignment of joints shall be marked by a chalk line or other suitable guide. The saw cut shall not vary more than 1/2-inch from the true joint alignment. Sawing shall be discontinued when a crack develops ahead of a saw cut. Immediately after each joint is sawed, the saw cut and adjacent concrete surface shall be thoroughly flushed with water until all waste from sawing is removed from the joint. Any membrane-forming compound surface damaged during the sawing operations shall be resprayed as soon as the water disappears; any joint in the area being resprayed shall be protected by inserting moistened paper or fiber rope or covering with strips of waterproof material prior to application of the curing compound, in a manner to prevent the curing compound from entering the joint. The sawing equipment shall be adequate in number of units and power to complete the sawing at the required rate. An ample supply of saw blades and at least one stand-by sawing unit in

good working order shall be available on the job before sawing is started, and at all times during the sawing operations.

5.2.3 Transverse Contraction Joints: Joints shall be constructed by sawing. Joints shall be straight and of the size indicated for the entire length of the joint. Joint assemblies are not required in unreinforced pavement.

5.2.4 Longitudinal Contraction Joints: Longitudinal contraction joints shall be constructed by the method specified for transverse contraction joints.

5.2.5 Transverse Construction Joints: Except for emergency stops, all transverse construction joints shall be located at transverse contraction joints.

5.2.6 Installation of Joint Sealing Material:

5.2.6.1 General Sealer Installation Requirements: All joints shall be sealed as specified herein and in accordance with the drawings. Sealers and sealed joints which fail to meet specified requirements shall be removed and replaced in a satisfactory manner at no additional cost to the Government. All material removed from an unsatisfactory joint shall be wasted.

5.2.6.2 Preparation of Joints: Preparation of joints shall be as follows:

5.2.6.2.1 Cleaning of Joints: Immediately before installation of the sealer, the joints shall be thoroughly cleaned until all laitance, curing compound, preformed joint filler, and protrusions of hardened concrete are removed from the sides and upper edges of the joint space to be sealed. The following sequence of operations shall be used to clean the joints. A power-driven concrete-saw blade shall be used to saw through all sawed and preformed joint filler type joints to loosen and remove material until the joint groove is clear and open to the full specified width and depth. All loosened materials shall be blown from the joint by compressed air. For liquid joint sealers, the exposed concrete joint faces and the pavement surfaces extending about 1 inch from the edges of joints shall then be sandblasted using a multiple-pass technique with properly positioned and directed nozzles until the surfaces are free of dust, dirt, curing compound, preformed joint filler, and any other material that might prevent bonding of the sealer to the concrete. Sand of proper size and quality shall be used in the sandblasting operation. A minimum of 150 cubic feet per minute of air at a nozzle pressure of 90 pounds per square inch shall be used for sandblasting and for final cleaning of the joints immediately prior to the application of the sealer.

5.2.6.2.2 Back-Up Material for Step Sawed Grooves: Only the top portion of the joint shall be sealed with sealer to the depth indicated. Where step sawed grooves are to be sealed with liquid-type joint sealers, the lower portion of the groove shall be plugged or sealed off to prevent entrance of

sealer. The material used to seal off the lower portion of the groove shall be an approved compressible, nonshrink material non-reactive to the joint sealer.

5.2.6.2.3 Barrier Sheet for Sawed-Out Insert Grooves: Only the top portion of the joint shall be sealed with sealer to the depth indicated. Joint sealer shall not be placed in direct contact with bituminous joint filler material with which it is incompatible. Where bituminous joint filler is used in the joint to be sealed, direct contact between the materials shall be prevented by placing a barrier sheet on top of the filler prior to application of the joint sealer. Barrier sheet shall be as specified hereinbefore in the paragraph covering preformed joint fillers. The barrier sheet may be omitted if certification is furnished by both the sealer and joint filler manufacturers that the joint sealer and joint filler are compatible when placed in direct contact. The sawed out depth of the filler insert shall be increased if necessary to provide the minimum sealant depths shown in the joint details.

5.2.6.3 Preparation of Sealer: Preparation of liquid sealers shall be as follows:

5.2.6.3.1 Hot Applied Liquid Sealers: Hot-poured sealing materials shall not be heated in excess of the safe heating temperature recommended by the manufacturer as shown on sealer containers. Sealer that has been overheated or subjected to heating for over 3 hours or that has remained in the applicator at the end of the day's operation shall be withdrawn and wasted.

5.2.6.4 Application of Liquid Joint Sealer: No joint sealer shall be installed until the cleaned joints to be sealed have been inspected. The joints shall be filled to within 1/8-inch of the top of the pavement surface, without formation of voids or entrapped air, using equipment specified hereinbefore for the type of sealing material to be installed. Excess or spilled sealer shall be removed from the pavement by approved methods and discarded. Traffic shall not be permitted over newly sealed pavement until authorized by the Contractor Quality Control representative. The curing of the in-place sealer to a tack-free condition within 3 hours shall be checked frequently during each day's sealing operations.

5.2.6.5 Application of Preformed Neoprene Joint Seal: Lubricant-adhesive shall be applied to the sides of the neoprene immediately prior to installation of the seal. The seal shall be installed in the joint without twisting so that the top of the seal is located 1/8-inch (plus or minus 1/16-inch) below the pavement surface. Neoprene shall be one continuous piece for all transverse joints, and in longitudinal joints shall be spliced at transverse joint intersections only. Splices shall be made using the lubricant-adhesive on the ends of the seal. Installation of the neoprene shall be such that elongation of the seal does not exceed 5 percent.

5.2.6.6 Time of Application: Joints shall be sealed immediately following curing of the concrete. Ambient and pavement temperature shall be

at least 50 degrees Fahrenheit at time of sealer installation. Open joints that cannot be sealed immediately after the curing period shall be filled with an approved material until sealed to prevent infiltration of foreign particles.

6. QUALITY CONTROL: Approvals, except those required for field installations, field applications, and field tests, shall be obtained before custom fabrication is started and before delivery of materials or equipment to the project site. All materials and material sources shall be approved not less than 30 days prior to their use in the work.

6.1 Sampling and Testing:

"6.1.1 Sampling and Testing Joint Sealers: Joint sealers shall be tested by the Contractor, and no material shall be used prior to receipt of written notice that the material is acceptable. Sampling methods and frequency shall be as prescribed in the referenced specification for the material. Samples shall be submitted to the Contractor well in advance of sealant application so as to allow sufficient time for processing, shipping, and performing tests thereon in accordance with the referenced specification for the material. The cost of the tests of samples from each lot of joint sealer shall be borne by the Contractor. If the sample fails to meet specification requirements, the material represented by the sample shall be replaced. Sampling and testing new material, and all retests of rejected material, shall be at the expense of the Contractor."

6.1.2 Shop Drawings: Shop drawings or catalog cuts shall be furnished covering mooring eyes.

6.2 Materials Tests and Test Reports: The testing requirements for materials incorporated in referenced documents, <u>except for joint sealers</u>, will be waived provided the manufacturer submits notarized certificates stating that previously manufactured materials have been tested by recognized laboratories, that such materials meet testing requirements specified, and that the materials furnished for this project are of the same type, quality, manufacture and make as that tested. Copies of the test reports need not be submitted except as specifically requested by the Contracting Officer.

---END---

SECTION 02699. MARKING OF AIRFIELD PAVEMENTS

1. APPLICABLE PUBLICATIONS: The following publications of the issues listed below, but referred to hereinafter by basic designation only, form a part of this specification to the extent required by the references thereto:

1.1 Federal Specifications:

TT-P-85D & Am 1	Paint, Traffic; Reflectorized for Airfield Runway Marking (Drop-in Type).
TT-P-110C	Paint, Traffic; Black (Nonreflectorized).
TT-P-115E	Paint, Traffic, Highway, White and Yellow.

2. QUALITY CONTROL: Approvals, except those required for field installations, field applications, field tests shall be obtained before delivery of materials or equipment to the project site. All materials and materials sources shall be approved not less than 30 days prior to their use in the work.

2.1 Inspection: Pavement markings shall be inspected at all times to insure that provisions of this section are strictly followed. No painting shall commence in any area until pavement surfaces have been inspected and approval given to proceed with work. Such approval shall be obtained each day and after periods of precipitation. Paint shall dry sufficiently within two hours, to prevent displacement or pickup by tires. If drying is slow, painting operations shall be discontinued until the cause of slow drying is determined and corrected.

3. SUBMITTALS:

3.1 Certificates: Submit certificates from the manufacturer attesting that the following products conform to all requirements of this specification and of reference documents:

(a) Paints
(b) Reflective Media

3.1.1 Sample Certificate: The certificate shall not contain statements that could be interpreted to imply that the product does not meet all requirements specified, such as "as good as"; "achieve the same end use and results as materials formulated in accordance with the referenced specification"; "equal or exceed the service and performance of the specified material". The certificate should simply state that the product conforms to all requirements specified.

SAMPLE CERTIFICATE

The manufacturer hereby certifies that the following products being furnished for this project conform to all requirements of the project specifications and of the reference specifications listed:

MANUFACTURER AND PRODUCT	REFERENCE SPECIFICATION
John Doe Company Portland Cement, Type I	ASTM C150-74, Type I.

SIGNATURE AND TITLE

4. PROTECTION OF WORK: Newly painted surfaces shall be protected from damage by aircraft and vehicles during the time required for paint to harden sufficiently to withstand traffic. During periods of high wind, painting will be discontinued. All damage to newly painted markings, due to Contractor's failure to provide adequate protection, shall be repaired by him at no additional cost to the Government.

5. MATERIALS: Paint shall be homogeneous, easily stirred to smooth consistency, and shall show no objectionable characteristics during prolonged storage. The composition and quality of the paint shall be such as to produce a strong and adherent binder for the glass spheres, form a firm bond with the pavement on which applied, and have sufficient resistance to weathering and traffic to warrant its use on airfield pavements. Paint shall have low boiling solvents (50 percent boiling below 240 degrees F. and 90 percent below 280 degrees F.) and high flexibility.

5.1 Reflective paint shall consist of two components, a pigmented binder and glass spheres, and shall conform to TT-P-85.

5.2 Nonreflective white and yellow paints shall conform to TT-P-115, Type II.

5.3 Nonreflective black paint shall conform to TT-P-110, Type I.

6. REQUIREMENTS: The work includes furnishing and application of traffic paints and reflective media to helipad pavement surfaces as indicated and specified herein.

7. SURFACE PREPARATION: New pavements shall not be painted until the specified curing period has elapsed. Prior to painting, the areas of the pavement indicated to be painted shall be sandblasted to remove all laitance and curing compound. Where it has been determined by the manufacturer of the curing compound that paint may be applied over the curing compound, it shall not be necessary to remove curing compound prior to application of paint. Surfaces shall be further cleaned immediately prior to painting to remove all dirt, dust, and other bond-inhibiting materials.

8. APPLICATION:

8.1 Equipment: The equipment for applying the paint shall be a self-propelled or mobile drawn pneumatic spraying machine with an arrangement of atomizing nozzles capable of applying any width of line at one time in

multiples of 6 inches from 6 inches to 36 inches. The applicator shall be capable applying the line at a speed of not less than 5 miles an hour. The machine shall be capable of applying the paint at the rate specified hereinafter at an even and uniform thickness, with clear cut edges. The paint applicator shall have a paint reservoir or tank of sufficient capacity to apply as prescribed by the requirements of this specification. The spray mechanism shall be operated by means of quick opening and closing valves conveniently located, and shall include necessary pressure regulators and gages located, and shall include necessary pressure regulators and gages located so as to be in full view and reach of the operator at all times. The paint applicator shall be readily adaptable for attachment of an air actuated dispenser for the reflector medium approved for use. Paint strainers shall be installed in the paint supply lines to insure freedom from residue and foreign matter that may cause malfunction of any of the spray guns.

8.1.1 Reflector Medium Dispenser: The dispenser for drop-in of the reflector medium shall be attached to the paint dispenser and shall operate automatically and simultaneously with the paint applicator through the same control mechanism. The dispenser shall be so designed that it will provide uniform flow of reflector medium at the specified rate of coverage regardless of the speed of the paint applicator to which it is attached.

8.2 Painting Procedure: No paint shall be applied to damp or wet pavement surfaces, nor when inclement weather threatens to interrupt normal progress of the work. Paint shall not be applied at a temperature below 40 degrees F. nor exceeding 95 degrees F. Paint shall be applied pneumatically, with equipment previously specified. The width of the lines applied shall be within a tolerance of one inch; however, the average width of lines applied shall not underrun the width indicated. The center lines of marking shall not deviate more than one inch laterally from a straight line at any point. Workmanship shall conform to the best commercial practices consistent with these specifications. Areas not properly painted shall be repainted at no additional cost to the Government. All spilled paints shall be cleaned from the paved areas. The Contractor shall keep the premises clean at all times. Paint, empty containers, and other material or equipment shall not be stored or allowed to accumulate on or near the paved areas.

8.2.1 Reflective Media: Drop on application of the glass spheres shall be accomplished with the equipment previously specified and in such manner as to insure that the reflective media is evenly distributed at the specified rate of coverage. Application of the reflective media shall immediately follow the application of the paint binder. Should there be malfunction of either the paint applicator or reflective media dispenser, operations will be discontinued immediately until the deficiency is corrected. The area painted during malfunctioning of the equipment will be repainted at no additional cost to the Government.

8.3 Rate of Application: The paint shall be applied at the rate of 105 square feet, plus or minus 5 square feet, per gallon of paint (approximately 15 mils wet film and 6.5 mils dry film thickness). The glass spheres for reflective paint shall be dispensed at the rate of 10 pounds per gallon of paint.

---END---

SECTION 02711. FENCE, CHAIN-LINK

1. APPLICABLE PUBLICATIONS: The following publications of the issues listed below, but referred to thereafter by basic designation only, form a part of this specification to the extent indicated by the references thereto:

1.1 Federal Specifications (Fed. Spec.):

FF-P-101E & Am 1	Padlocks.
RR-F-191G/GEN	Fencing, Wire and Post, Metal (and Gates, Chain-link Fabric, and Accessories).
RR-F-191/1A & Am 1	Fencing, Wire and Post, Metal (Chain-link Fence Fabric).
RR-F-191/2A & Am 1	Fencing, Wire and Post, Metal (Chain-link Fence Gates)
RR-F-191/3A & Am 1	Fencing, Wire and Post, Metal (Chain-link Fence Posts, Top Rails and Braces).
RR-F-191/4A	Fencing, Wire and Post, Metal (Chain-link Fence Accessories).

1.2 American Society for Testing and Materials (ASTM) Standard:

C94-74a	Ready-Mixed Concrete.

2. QUALITY CONTROL: Approvals, except those required for field installations, field applications, and field tests, shall be obtained before delivery of material or equipment to the project site.

3. SUBMITTALS:

3.1 Shop Drawings: Shop drawings shall be approved by the Contractor Quality Control Representative and submitted to the Contracting Officer for record purposes before work is started.

3.2 Certificates: Submit certificates from the manufacturer attesting that the following products conform to all requirements of this specification and of reference documents.

(a) All Fencing Components
(b) Padlock

3.2.1 Sample Certificate: The certificate shall not contain statements that could be interpreted to imply that the product does not meet all requirements specified, such as "as good as"; "achieve the same end use and results as materials formulated in accordance with the referenced specification"; "equal or exceed the service and performance of the specified material". The certificate should simply state that the product conforms to all requirements specified.

SAMPLE CERTIFICATE

The manufacturer hereby certifies that the following products being furnished for this project conform to all requirements of the project specifications and of the reference specifications listed:

MANUFACTURER AND PRODUCT	REFERENCE SPECIFICATION
John Doe Company Portland Cement, Type I	ASTM C150-74, Type I.

SIGNATURE AND TITLE

4. MATERIALS: Materials shall conform to referenced specifications and other requirements as specified herein.

4.1 Chain-Link Fencing, Fabric, Gates, Posts, and Braces, and Accessories: RR-F-191/GEN and detailed specifications as referenced herein.

4.1.1 Chain-Link Fencing Fabric: RR-F-191/1A; type V, vinyl-coated steel, extruded vinyl, 6 gage coated wire size. Mesh size shall be not less than 5.1 centimeters. Selvage shall be twisted and barbed at both selvages.

4.1.2 Chain-Link Fencing Gates: RR-F-191/2A; type I, single swing, shape and size of the gate frame shall be as indicated. Framing and bracing members shall be round steel. Finish for steel shall be plastic-coated. Gate fabric shall be as specified herein for chain-link fencing fabric. Coating on steel latches, stops, hinges, keepers, and accessories shall be vinyl coated; thickness of vinyl coat shall be not less than 0.010 inch. Gate latches shall be single type as specified herein. Gates shall have truss rods or intermediate braces. Gate fabric shall be attached to the gate frame by methods standard with the manufacturer except that welding will not be permitted. Latches shall be arranged for padlocking so that padlock will be accessible from both sides of the gate regardless of latching arrangement.

4.1.3 Chain-Link Fencing, Post, and Braces: RR-F-191/3A; post type I class, 1, steel pipe 2, formed steel 4, steel H sections or 5, steel square sections. All posts and braces shall be vinyl-coated steel.

4.1.4 Chain-Link Fencing Accessories: RR-F-191/4A (vinyl-coated steel).

4.1.5 Color of Vinyl Coating: Dark Green.

4.1.6 Concrete: ASTM C94, using 3/4-inch maximum-size aggregate, and having minimum compressive strength of 3,000 psi at 28 days. Grout shall consist of one part portland cement to three parts clean, well-graded sand and the minimum amount of water to produce a workable mix.

4.1.7 Padlocks: FF-P-101, type EPB, 1-3/4 inch size, with chain.

5. INSTALLATION:

5.1 General: The fence shall be installed on previously prepared surfaces to line and grade as indicated. Fence installation shall be in accordance with the fence manufacturer's written installation instructions except as modified herein.

5.2 Excavation: Excavation for concrete-embedded items shall be of the dimensions indicated except in bedrock. If bedrock is encountered before reaching the required depth, the excavation shall be continued to the depth indicated or 18 inches into the bedrock, whichever is less, and shall be a minimum of 2 inches larger than the outside diameter of the post. Post holes shall be cleared of loose material. Waste material shall be spread where directed.

5.3 Post Setting: Posts shall be set plumb and in alignment. Posts shall be set in concrete bases of dimensions indicated except in bedrock and in concrete slabs. Concrete shall be thoroughly compacted so as to be free of voids and finished in a dome. Straight runs between braced posts shall not exceed 500 feet. In bedrock, posts shall be set with a minimum of one inch of grout around each post. Grout shall be thoroughly worked into the hole so as to be free of voids and finished in a dome. Concrete and grout shall be cured a minimum of 72 hours before any further work is done on the posts. In concrete slabs, posts shall be set in sleeves with lead as indicated.

5.4 Post Caps: Post caps shall be installed as recommended by the manufacturer.

5.5 Top and Bottom Reinforcing Wires: Top and bottom reinforcing wires shall be installed before installing chain-link fabric and shall be pulled taut. Distance from top and bottom edges for installation of reinforcing wires shall be six inches.

5.6 Fabric: Fabric shall be pulled taut and secured to the top wire and bottom wire close to both sides of each post and at intervals of not more than 24 inches on centers. Fabric shall be secured to posts using stretcher bars and ties or clips or by integrally weaving to integral fastening loops of end, corner, pull, and gate posts for the full length of each post. Fabric shall be installed on the opposite side of posts from the area being secured. Installation of fabric shall be such that bottom of fabric is at two inches above ground level.

5.7 Gates: Gates shall be hinged to swing through 180 degrees from closed to open.

5.8 Padlocks: Padlocks shall be provided for gate openings and shall have chains that are securely attached to the gate or gate posts. Padlocks shall be keyed alike and two keys shall be provided for each padlock.

6. GROUNDING: Grounding of fencing shall be accomplished by the burial of a 500 MCM copper ground conductor 2 feet inside of the fenced area and 3 feet below grade. The ground conductor shall be connected to each fence post by a #6 copper conductor bolted to the post within the encasement of the concrete base. The vinyl coating shall be rewired from the post at the connection. The ground conductor shall be exothermically welded and 3/4 inch round by 10 feet long copper clad ground rods driven to a depth of one foot below grade at each corner of the fence.

---END---

SECTION 02712. YARD ACCESSORIES

1. SUBMITTALS:

1.1 Samples: One sample of each type of product shall be delivered to the site for quality approval prior to the shipment of the remainder of the units. Approved samples shall be properly stored by the Contractor and incorporated in the work.

1.2 Certificates: Submit certificates from the manufacturer attesting that the following products conform to all requirements of this specification and of reference documents.

(a) Urn, smoking, exterior
(b) Container, trash, exterior

1.2.1 Sample Certificate: The certificate shall not contain statements that could be interpreted to imply that the product does not meet all requirements specified, such as "as good as"; "achieve the same end use and results as materials formulated in accordance with the referenced specification"; "equal or exceed the service and performance of the specified material". The certificate should simply state that the product conforms to all requirements specified.

SAMPLE CERTIFICATE

The manufacturer hereby certifies that the following products being furnished for this project conform to all requirements of the project specifications and of the reference specifications:

MANUFACTURER AND PRODUCT	REFERENCE SPECIFICATION
John Doe Company Portland Cement, Type I	ASTM C150-74, Type I

SIGNATURE AND TITLE

1.2.2 Samples: Provide one representative sample each of the following items for the Contracting Officer's approval:

a. Stepping Stones
b. Ornamental Rocks (small sample plus photographs)

Approved samples shall be stored by the Contractor and may be incorporated in the work.

2. MATERIALS: Materials shall conform to referenced specifications and other requirements as specified herein.

2.1 Urn, Smoking, Exterior (Item EX-1): The urn shall be a free-standing container, 24" high by 24" square; constructed of ribbed, bonded aluminum like Forms and Surfaces, Box 5215, Santa Barbara, California 93108, Type AE 301, finish FGM-80, anodized or sprayed black on exterior surfaces. The unit shall be suitable for exterior use and shall have pre-drilled drainage and mounting holes.

2.2 Container, Trash, Exterior (Item EX-2): The container shall be free-standing, 26" high by 22" diameter with removable interior container and top cover with litter deposit opening; constructed of ribbed, bonded aluminum like Forms and Surfaces, Box 5215, Santa Barbara, California 93108, Type AE 301, finish FGM-80, anodized or sprayed black on exterior surfaces. The unit shall be suitable for exterior use and shall have pre-drilled drainage and mounting holes.

2.3 Sand, White: Clean white masonry sand.

2.4 Concrete Bases: Provide concrete bases and anchors as indicated on the drawings. Concrete shall conform to the section entitled "Cast In Place Concrete".

2.5 Tree Grates: Grates shall be heavy duty cast iron. The castings shall be as detailed on the drawings and shall have support at joints of sections as detailed.

2.6 Stepping Stones: Stones shall be quarried granite of nominal 4" thickness by 20" square. Edges shall be split face and the top shall be rough but suitable for foot traffic. The color shall be similar to that of the ornamental rocks, but unweathered.

2.7 Ornamental Rocks: Rocks shall be weathered granite selected from similar natural outcroppings. Size ranges are indicated on the drawings. A large rock, naturally fractured into pieces may be used to form a group. One rock shall be incised to receive a dedication plaque.

3. INSTALLATION:

3.1 Concrete Bases: Construct bases with level tops and rubbed surfaces at the locations indicated on the drawings. Straight edges shall be parallel to building faces and walk and curb edges.

3.2 Mounting of Urns and Containers: Each unit shall be securely mounted in plumb position on its base as detailed.

3.3 Sand Fill: Each urn, smoking, exterior, (Item EX-1), shall have its drain holes covered with a porous fiberglass batt at least 1/4" thick and shall then be filled to within 1/2" of the top with white sand.

3.4 Concrete Pavers: Set pavers on top of compacted subgrade at exterior locations indicated on the drawings. Tamp them carefully to obtain firm overall contact with the subgrade.

3.5 Stepping Stones: Set stepping stones on top of compacted subgrade at interior (atrium) locations indicated on the drawings. Tamp them carefully to obtain firm overall contact with the subgrade.

3.6 Ornamental Rocks: Construct the concrete footings and piers in the atrium at the locations indicated on the drawings. Shape the pier tops to receive a stiff grout setting bed and the rocks. The rocks shall be oriented as approved by the Contracting Officer and shall be completely stable after setting.

3.7 Tree Grates: Install grates flush with the adjacent pavement after the trees have been planted at locations indicated on the drawings. Grates shall not rock when subjected to foot traffic.

4. PROTECTION: Accessories shall be covered for protection from use and damage until completion of the project. Then, the protection shall be removed.

---END---

SECTION 02713. SPRINKLER IRRIGATION

1. SUBMITTALS:

1.1 Samples: One sample of each type of product shall be delivered to the site for quality approval prior to the shipment of the remainder of the units. Approved samples shall be properly stored by the Contractor and incorporated in the work.

1.2 Certificates: Submit certificates from the manufacturer attesting that the following products conform to all requirements of this specification and of reference documents.

a. Irrigation heads
b. Atmospheric vacuum breakers
c. Electric Valves
d. Automatic Controller

1.2.1 Sample Certificate: The certificate shall not contain statements that could be interpreted to imply that the product does not meet all requirements specified, such as "as good as"; "achieve the same end use and results as materials formulated in accordance with the referenced specification"; "equal or exceed the service and performance of the specified material". The certificate should simply state that the product conforms to all requirements specified.

SAMPLE CERTIFICATE

The manufacturer hereby certifies that the following products being furnished for this project conform to all requirements of the project specifications and of the reference specifications listed:

MANUFACTURER AND PRODUCT	REFERENCE SPECIFICATION
John Doe Company Portland Cement, Type I	ASTM C150-74, Type I.

SIGNATURE AND TITLE

1.2.2 Operating Schedule: The installer shall provide the Contractor with a recommended operating schedule suitable for maintaining proper moisture in the atrium planting area.

2. MATERIALS: Materials shall conform to referenced specifications and other requirements as specified herein.

for the Atrium

2.1 Irrigation Heads: Heads shall be of the stream spray type, fabricated of machined brass with filter screen, nylon stream guide and rustproof spray adjustment screw. The minimum spray characteristics at a 35 degree spray trajectory shall be:

Head Type	Spray Radius	G.P.M.	P.S.I.
Half Circle:	16	0.9	15
Quarter Circle:	16	0.5	15

2.2 Irrigation Piping: All piping shall be copper as specified in the section entitled "Water Distribution". DELETED SEE NEXT PAGE

2.3 Irrigation Valves: Gate valves shall be specified in the section entitled "Water Distribution".

2.4 Atmospheric Vacuum Breakers: Breakers shall conform to Standard 1001, American Society of Civil Engineers and shall be rated for use at 212° maximum temperature and 125 p.s.i. maximum pressure. The finish shall be plain brass.

2.5 Electric Valves: Remote control valves shall be of the electric solenoid type brass bodied, pressure rated at 200 p.s.i., normally closed, 2 watt, 24 watt, 60 cycle A.C. specifically manufactured for direct burial underground sprinkler irrigation use. Other features shall include flow adjustment, manual shutoff, bleed plug, grit filter, fluid resistor for slow opening and closing.

2.6 Valve Boxes: Each valve shall have a box consisting of gray, Schedule 40, polyvinyl chloride (PVC) with a loose PVC cap. The pipe diameter shall permit operation of the flow control and the bottom of the length shall rest on the valve and the top shall be at finished grade.

2.7 Automatic Controller: The automatic irrigation controller shall be Underwriters Laboratories (UL) listed, 24 volt, 1.5 amp output compatible with the electric valves to be used. Features shall include a 24-hour electric clock, 7-day calendar, 1 start per day per station, 3 stations, 5 to 60 minute station timing, master power switch and manual cycle start lever. The wall mounted case shall be metal with baked enamel finish, with a dust-proof backing cover with 2 keys. The transformer shall be internally mounted and shall have automatic circuit breaker overload protection.

2.8 See next page

3. INSTALLATION:

3.1 General: The irrigation system shall be located in the interior atrium where indicated on the drawings. The system shall be installed in coordination with the planting operations specified in section entitled "Planting Trees, Shrubs and Groundcovers". It shall be used to maintain the plants until completion of the project.

3.2 Placement and Adjustment: Gate valves, anti-siphon valves and heads shall be mounted plumb on copper risers and shall be properly oriented. Mains and laterals shall have not less than 12" of earth cover. The piping shall be flushed free of debris and grit, then the heads shall be installed and adjusted for optimum flow and coverage.

3.3 Automatic Operation: The automatic controller and the electric valves shall be interconnected and made fully operational as follows:

Station 1 - Valve 1
Station 2 - Valve 2
Station 3 - Valves 1 & 2

The operating cycles shall be adjusted once or more per week for a period of at least 28 days to determine the optimum clock settings for each cycle. Care must be taken not to over water. Typewritten operating instructions covering the optimum cycles shall be attached inside the box cover and 2 copies given to the contracting officer.

---END---

2. MATERIALS:

2.1 Irrigation Heads: Change paragraph title for the Atrium."

2.2 Irrigation Piping: Delete paragraph and su lieu thereof:

"2.2x Irrigation Piping".

Add the following new paragraphs

"2.2.1x Plastic Piping: The mains and latera conforming to ASTM D2241 as specified in the Secti Classes shall be as follows:

Pipe Diameter	Class	SDR
1/2 and 3/4 inch	315	13.5
1 inch and larger	160	21

Thermoplastic fittings and solvents shall by the pipe manufacturer.

2.2.2x Copper Piping: Risers which extend abo The pipe, fittings and solders shall be as spe Plumbing. Riser below grade may be copper at the con

2.2.3x Steel Piping: Risers below grade may be the contractor's option. When it is used, galvanize shall be as specified in the Section: Plumbing."

2.3 Irrigation Valves: Add this sentence at t "Each valve handle shall be of the "cross" con irrigation valves and shall be suitable for operatior specified hereinafter."

Add the following new paragraphs:

"2.8 Irrigation Heads for the Sod Roof: "pop-up/pop-down" type with die cast brass ripper boc with adjusting screw; stem assembly of machine self-flushing design; lower body of PVC, type 1-11; spring; self-sealing, conical, molded rubber washer

nipple flange; a 1/2" female pipe thread connection; and operating characteristics as follows:

Head Type	Spray Radius	G.P.M.	P.S.I.
Quarter Circle	12'	0.75	30
Half Circle	12'	1.10	30
Full Circle	12'	2.20	30

2.9 Irrigation Head Wrench: Provide as part of the contract, two (2) wrenches to fit the irrigation heads for the sod roof. Each wrench shall have a socket to fit the nozzle and spanner to fit the head.

2.10 Automatic Drain Valves: Each valve shall be constructed of machined brass with stainless steel ball seat and 1/2 inch male pipe thread. The valve shall open when the line pressure drops below 3 p.s.i.

2.11 Basket Screws: A 1/2 inch tapered, molded plastic basket-type sediment screen shall be provided in each riser just below the irrigation head.

2.12 Manual Valve Key: Provide, as part of the contract, two (2) aluminum painted, welded steel rod, wrenches approximately 30 inches long which can be used to operate the irrigation valves set in valve boxes."

3. INSTALLATION:

3.1 General: Delete entire paragraph and substitute the following in lieu thereof:

"3.1x General:"

Add the following new paragraphs:

"3.1x.1 Atrium Irrigation: The irrigation system shall be located in the interior atrium where indicated on the drawings. The system shall be installed in coordination with the planting operations specified in section entitled "Planting Trees, Shrubs and Groundcovers". It shall be used to maintain the plants until completion of the project.

3.1x.2 Sod Roof Irrigation: This system begins at a tee provided on the yard hydrant line to the northeast of the sod roof and extends onto the sod roof. The work shall be coordinated with the construction and sodding operations so that the system may be used to water the sod."

3.2 Placement and Adjustment: Add the following sentences at the end of the paragraph: "Plastic pipe shall be installed so as to provide for expansion and contraction as recommended by the manufacturer. Fittings and solvents used shall be those recommended by the pipe manufacturer. Laterals equipped with automatic drain valves shall slope toward the valves and correct operation of the valves shall be observed before backfilling. Each section or circuit shall be tested for leakage prior to completion of backfilling."

SECTION 02822. ESTABLISHING VEGETATION

1. SUBMITTALS:

1.1 Material Tests and Test Reports: The testing requirements for materials incorporated in referenced documents will be waived provided the manufacturer submits certificates stating that previously manufactured materials have been tested by recognized laboratories, that such materials meet testing requirements specified, and that the materials furnished for this project are of the same type, quality, manufacture and make as that tested. Copies of the test reports need not be submitted except as specifically requested by the Contracting Officer.

1.2 Certificates: Submit certificates from the manufacturer attesting that the following products conform to all requirements of this specification and of reference documents:

a. Fertilizer
b. Lime
c. Seed
d. Mulch
e. Asphalts
f. Matting for Erosion Control
g. Sod

1.2.1 Sample Certificate: The certificate shall not contain statements that could be interpreted to imply that the product does not meet all requirements specified, such as "as good as"; "achieve the same end use and results as materials formulated in accordance with the referenced specification"; "equal or exceed the service and performance of the specified material". The certificate should simply state that the product conforms to all requirements specified.

SAMPLE CERTIFICATE

The manufacturer hereby certifies that the following products being furnished for this project conform to all requirements of the project specifications and of the reference specifications listed:

MANUFACTURER AND PRODUCT	REFERENCE SPECIFICATION
John Doe Company Portland Cement, Type I	ASTM C150-74, Type I

SIGNATURE AND TITLE

1.3 Samples: Submit one sample of each of the following items:

a. Seed b. Mulch c. Matting for Erosion Control

2. QUALITY CONTROL:

2.1 Inspection and Tests:

2.1.1 Seed: Furnish duplicate signed copies of a statement from the vendor, certifying that each container of seed is fully labeled in accordance with the Seed Improvement Association requirements for certification. This certification shall appear on, or with, all copies of invoices for the seed. Each lot of seed will be subject to sampling and testing at the discretion of the Contracting Officer. Sampling and testing will be in accordance with the latest regulation under the Federal Seed Act. Samples shall be submitted at least 40 days in advance of the planned planting date.

2.1.2 Fertilizer and Lime: Furnish duplicate copies of invoices for all fertilizer and lime used on the project. Invoices for fertilizer shall show the analysis and the quantity furnished. Invoices for lime shall show the percentage of magnesium oxide and quantity furnished. Upon completion of the project, a final check of the total quantities of fertilizer and lime used will be made against the total area seeded and if the rates of application have not been met, additional quantities of these materials shall be applied to make up the application specified.

3. MATERIALS:

3.1 Lime shall be dolomitic agricultural-ground limestone containing not less than 10 per cent magnesium oxide.

3.2 Fertilizer shall be the standard commercial product of 10-10-10 analysis. All fertilizer shall be delivered in bags bearing the manufacturer's name, the chemical analysis of the product, and its weight. If not used immediately after delivery, fertilizer shall be stored in a manner that will not allow it to harden or destroy its effectiveness.

3.3 Seed shall be new crop seed labeled in accordance with the U.S. Department of Agriculture, "Rules and Regulations under the Federal Seed Act." All seed shall be furnished in sealed standard containers. Seed which has become wet, moldy, or otherwise damaged prior to seeding, will not be acceptable.

3.4 Mulch shall be any of the materials noted below:

3.4.1 Grain Straw or Dry Hay: Mulch material which contains an excessive quantity of matured seed of noxious weed or other species which would hinder the establishment of desirable vegetation will not be acceptable. Any mulch material which is fresh or excessively brittle or which is in an advanced stage of decomposition as to smother or retard growth of grass will not be acceptable. Asphaltic material to anchor straw mulch shall be thin enough to be blown from spray equipment. It shall be SS-1, RS-1, or RS-2 asphalt emulsion.

3.4.2 Wood Cellulose Fiber Mulch: Wood cellulose fiber mulch for use with the hydraulic application of grass seed and fertilizer shall consist of specially prepared wood cellulose fiber. It shall be processed in such a manner that it will contain no growth or germination inhibiting factors and shall be dyed an appropriate color to facilitate metering of materials. It shall be manufactured in such a manner that after addition and agitation in slurry tanks with fertilizers, grass seeds, water, and other ingredients, the

"3.5x Topsoil required in excess of that available from stripping topsoil from the site shall be provided by the Contractor from sources outside of Government property. The topsoil shall be natural, friable sandy loam or fine sandy loam, possessing the characteristics of producing heavy growths of agricultural crops and shall be obtained from naturally well-drained areas. The topsoil shall be reasonably free from subsoil, clay lumps, brush, stumps, objectionable weeds, other litter, and any other material or substance which might be harmful to plant growth or a hindrance to grading, planting, or maintenance operations. The topsoil proposed for use shall be inspected and approved at its natural location prior to its being moved to the construction site. At the time of inspection, the Contractor's Quality Control Representative may require representative soil samples to be taken from several locations of the area(s) under consideration and tested for physical properties, pH, available phosphate and potash and organic matter. If such tests are required, they shall be at the Contractor's expense."

DELETED

3.5 Topsoil from stripping topsoil from the site shall be utilized as directed to the extent available. The Contractor will not be required to haul in additional topsoil.

3.6 Matting for Erosion Control: Matting for erosion control shall be jute matting, excelsior matting, or paper matting. Matting for erosion control shall not be dyed, bleached, or otherwise treated in a manner that will result in toxicity to vegetation.

3.6.1 Jute Matting: Matting shall be of a uniform open plain weave of single jute yarn, 48 inches in width plus or minus 1 inch. The yarn shall be of a loosely twisted construction and shall not vary in thickness by more than one-half its normal diameter. There shall be 78 warp ends, plus or minus 2, per width of the matting; 41 weft ends, plus or minus 1, per linear yard; and the weight shall average 1.22 pounds per linear yard of the matting with a tolerance of plus or minus 5 percent.

3.6.2 Excelsior Matting: Matting shall consist of a machine produced mat of curled wood excelsior at least 47 inches in width. The mat shall weigh 0.975 pounds per square yard with a tolerance of plus or minus 10 percent. At least 80 percent of the individual excelsior fibers shall be 6 inches or more in length. The excelsior fibers shall be evenly distributed over the entire area of the blanket. One side of the excelsior matting shall be covered with a woven fabric of twisted paper cord or cotton cord, or with an extruded plastic mesh. The mesh size for either the fabric or plastic mesh shall be a minimum of 1 inch x 1 inch and a maximum of 1-1/2 inches x 3 inches.

3.6.3 Paper Matting: Matting shall consist of a knitted polypropylene yarn with uniform openings through which biodegradable paper strips have been continuously interwoven. The openings shall be no greater than 3/4 inch in their greatest dimension and 1/2 inch in their least dimension. The interwoven yarn and paper shall form a flexible mat which will stretch in any direction so as to conform to the shape of an irregular surface when applied to such surface. Paper matting shall be 3.6 feet or more in width and weigh a minimum of 0.09 pound per square yard.

3.6.4 Wire Staples: Staples shall be machine made of No. 11 gage new steel wire formed into a "U" shape. The size when formed shall be not less than 6 inches in length with a throat of not less than 1 inch in width.

3.7 Sod: Sod shall be Common Bermuda Type Sod and shall have been planted on cultivated agricultural land and grown specifically for sod purposes. It shall have been mowed regularly and carefully and otherwise maintained from planting to harvest to maintain reasonable quality and uniformity of color, leaf texture and shoot density. Before cutting the sod shall have been mowed to a height of 1/2 to 3/4 inches. It shall have no more than 1/2 inch of thatch buildup.

3.7.1 Cut and size: Sod shall be machine cut at a uniform soil thickness of 5/8 inch, plus or minus 1/4 inch, at the time of cutting. Measurement for thickness shall exclude top growth and thatch. Individual pieces of sod shall be cut to the supplier's standard width and length. Maximum allowable deviation from standard widths and lengths shall be plus or minus 1/2" on width and plus or minus 5% on length. Broken pads and torn or uneven ends will not be acceptable.

3.7.2 Strength and moisture content: Standard size sections of sod shall be strong enough to support their own weight and retain their size and shape when suspended vertically from a firm grasp on the upper 10% of the section. Sod shall not be harvested or transplanted when moisture content (excessively dry or wet) may adversely affect its survival. Sod shall not be permitted to dry out during shipment or on-site storage.

3.7.3 Diseases, Nematodes, and Insects: Sod shall be reasonably free of diseases, nematodes, and soil-borne insects and shall conform applicable requirements of the North Carolina Department of Agriculture.

3.7.4 Weeds: Sod shall be free of objectionable grassy and broad leaf weeds. Sod shall be considered free of such weeds if less than 5 such plants are found per 100 sq. ft. of area. Sod will not be acceptable if it contains any of the following weeds: quackgrass, johnsongrass, poison ivy, nutsedge, nimblewill, Canada thistle, bindweed, bentgrass, wild garlic, ground ivy, perennial sorrel, and bromegrass.

"The work includes bed preparation, liming, fertilizing, seeding and mulching of all newly graded finished earth surfaces and sodding of areas indicated to be sodded."

3.7.5 Time Limitations: Sod shall be harvested, delivered and transplanted within a period of 36 hours unless a suitable preservation method is approved prior to delivery. Sod not transplanted within this period shall be inspected and approved by the inspecting officer or his representative prior to its installation.

4. GENERAL REQUIREMENTS: ~~The work includes bed preparation, liming, fertilizing, seeding and mulching and sodding of all newly graded finished earth surfaces~~. The work also includes those areas inside or outside the limits of construction that are disturbed by the Contractor's operation.

5. SPECIAL SEEDING AND MULCHING EQUIPMENT:

5.1 Seeder: Equipment to be used for applying a seed-fertilizer mix over prepared slopes shall be a hydraulic seeder designed to pump a water-seed-fertilizer mixture over areas to be seeded at the specified rates. A power-driven agitator keeps the mixture uniform during the seeding cycle.

5.2 Mulch Spreader: Equipment to be used for spreading mulch shall be equipment designed to apply an asphalt adhesive to the straw mulch material at the end of a movable boom, then with a high velocity air stream, blow the asphalt-sprayed straw over the graded areas to form a uniform, porous, stable blanket, tied in place by the asphalt adhesive.

5.3 Wood Cellulose Fiber Mulch Spreader: Hydraulic equipment used for the application of fertilizer, seed, and slurry or prepared wood pulp shall have a built in agitation system with an operating capacity sufficient to agitate, suspend, and homogeneously mix a slurry containing up to 40 pounds of fiber plus a combined total of 70 pounds of fertilizer solids for each 100 gallons of water. The slurry distribution lines shall be large enough to prevent stoppage. The discharge line shall be equipped with a set of hydraulic spray nozzles which will provide even distribution of the slurry on the various slopes to be seeded. The slurry tank shall have a minimum capacity of 1,000 gallons and shall be mounted on a traveling unit which may be either self propelled or drawn with a separate unit which will place the slurry tank and spray nozzles within sufficient proximity to the areas to be seeded so as to provide uniform distribution without waste. Equipment with smaller tank capacity may be used provided that the equipment has the necessary agitation system and sufficient pump capacity to spray the slurry in a uniform coat.

6. SEEDBED PREPARATION: Equipment necessary for the proper preparation of the seedbed and for handling and placing of all required materials shall be on hand, in good condition and shall be approved before the work is started.

6.1 Clearing: Prior to or during grading and tillage operations, the ground surface shall be cleared of stumps, stones, roots, cable, wire, grade stakes, and other materials that might hinder proper grading, tillage, seeding, or subsequent maintenance operations.

6.2 Grading: Grades on the area to be treated shall be maintained in a true and even condition. Maintenance shall include any necessary repairs to previously graded areas.

6.3 Tillage: All graded areas shall be thoroughly tilled to a depth of at least 4 inches by plowing, disking, harrowing, or other approved methods until the condition of the soil is acceptable. On sites where soil conditions are such that high clay content and excessive compaction cause difficulty in getting clods and lumps effectively pulverized, the Contractor shall use the rotary tillage machinery, until the mixing of the soil is acceptable and no clods or clumps remain larger than 1-1/2 inches in diameter. A firm and compact seedbed is required, and after being graded, the seedbed shall be lightly compacted with a land roller, such as a cultipacker, before and after seeding. All tillage operations shall be as near on the contour as is practical but in no instance up and down the slope.

6.4 Topsoiling: The topsoil shall be uniformly distributed on the designated areas and evenly spread to an average thickness of 4 inches, with a minimum thickness of 3 inches. Prior to placing the topsoil, the subgrade, wherever excessively compacted by traffic or other causes, shall be loosened by disking or by scarifying to a depth of at least 2 inches, to permit bonding to the subgrade. The spreading shall be performed in such a manner that planting can proceed with little additional soil preparation or tillage. Any irregularities in the surface resulting from topsoiling or other operations shall be corrected in order to prevent the formation of depressions where water will stand. Topsoil shall not be placed when the subgrade is frozen, excessively wet, extremely dry, or in a condition otherwise detrimental to the planting or to proper grading.

7. LIMING: Limestone shall be uniformly applied at the rate of 3000 pounds per acre to all areas to be vegetated. Limestone may be applied to the area prior to the preparation of the seedbed, but in all cases, it shall be applied before seeding and thoroughly incorporated into the entire depth of the prepared seedbed. The incorporation of the lime may form a part of the tillage operation specified above.

8. FERTILIZING: The fertilizer shall be uniformly applied at the rate of 1000 pounds per acre to all areas to be vegetated. The fertilizer shall be incorporated into the upper three or four inches of prepared seedbed. This can be done just prior to the last tillage operation or just prior to seeding, but in no case, will it be applied more than 3 days before seeding or before the lime is applied. Distribution by means of an approved seed drill equipped to sow seed and distribute fertilizer at the same time will be acceptable. When hydroseeding equipment is used for planting operation, fertilizer shall be applied simultaneously with seed using the above rate of application.

9. PLACING MATTING: At locations indicated on the drawings, placing of matting shall be done immediately following seeding. The earth surface shall be smooth and free from stones, clods, or debris which will prevent the contact of the matting with the soil. Care shall be taken to preserve the required line, grade, and cross section of the area covered.

9.1 General: Matting shall be unrolled in the direction of the flow of water, and shall be applied without stretching so that it will lie smoothly but loosely on the soil surface. The up-channel or top of slope end of each piece of matting shall be buried in a narrow trench at least 5 inches deep and tamped firmly. After the end of the matting is buried, the trench shall be closed and tamped firmly. Where one roll of matting ends and a second roll begins, the end of the upper roll shall be brought over the buried end of the second roll so that there will be a 6 inch overlap. Check slots shall be constructed at each 50 feet longitudinally in the matting. These slots shall be narrow trenches at least 5 inches deep. The matting shall be folded over and buried to the full depth of the trench, after which the trench shall be closed and firmly tamped. Where 2 or more widths of matting are laid side by side, the overlap shall be at least 4 inches.

9.2 Stapling: Staples shall be placed across matting at ends, junctions, and check slots and shall be spaced approximately 10 inches apart. Staples shall be placed along the outer edges and down the center of each strip of matting and shall be spaced 3 feet apart. Staples shall also be placed along all lapped edges 2 to 3 feet apart. When excelsior matting is used, the matting shall be installed with the fabric on top side.

9.3 Rolling: After jute matting has been placed and stapling completed, the matting shall be rolled with an approved roller to assure that it is in proper contact with the soil. In the installation of erosion control matting on cut or fill slopes the Engineer may require adjustments in the trenching or stapling requirements to fit individual slope conditions.

9.4 Maintenance: The Contractor shall maintain matting until all work on the project has been completed and accepted. Prior to acceptance of the project, if any staples have become loosened or raised or if the matting becomes loose or torn, or undermined for any reason, the damaged areas shall be reshaped, reseeded, and refertilized, and the matting shall be acceptably repaired or replaced. Where paper matting becomes loose or raised above the surface of the ground, the matting shall be acceptably repaired or replaced. The maintenance erosion control matting shall be done at no cost to the Government.

10. SEEDING: The Contractor shall make use of special hydroseeding equipment or approved mechanical power-drawn seeders. When conditions are such, by reason of draught, high winds, excessive moisture, or other factors that satisfactory results are not likely to be obtained, the work shall be stopped, and resumed only when conditions are favorable. If inspection during

seeding operation, or after there is a show of green, indicates that strips wider than the space between the rows planted have been left, or other areas skipped, additional seed shall be sown on these areas. The variety of seeds indicated below shall be sown only during the optimum periods specified.

For the seeding period April 1 - May 15:

Variety	Pounds/Acre
Kentucky 31 Fescue	80
Hulled Common Bermuda grass	20
Total Mixture	100

For the seeding period September 1 - October 15:

Variety	Pounds/Acre
Kentucky 31 Fescue	100
Unhulled Common Bermuda grass	20

10.1 Broadcast Seeding: In areas too confined for the operation of machinery, hand-operated equipment, such as the "Cyclone" seeder, shall be employed. The seed shall be uniformly distributed over the designated areas. Half the seed shall be sown with the sower moving in one direction, and the remainder shall be sown with the sower moving at right angles to the first sowing. In confined areas, the seed shall be covered, but no deeper than 1/4-inch, by means of rakes or other approved hand tools. Broadcast seeding shall not be done during windy weather.

10.2 Slurry Seeding: Seed shall be sown with an approved hydroseeder in combination with fertilizer, or in combination with wood cellulose fiber mulch and fertilizer. Seed shall be uniformly distributed over the areas to be seeded.

10.3 Mechanical Power-drawn Seeder: Seeding shall be accomplished with a combination grass planter and land packer or pulverizer. The seed shall be planted no deeper than 1/4-inch. The seeding operation should be as near on the contour as is practical, but never up and down the slope. After seeding, the seeded area shall be compacted with a land roller, such as a cultipacker. It will be permissible to sow the seed and cultipack the soil all in one operation if the proper equipment is used.

11. MULCHING: The surface of all seeded areas shall be protected by the application of any of the before-mentioned mulch material unless otherwise specified.

11.1 Straw or hay shall be applied evenly over the seeded area in such a manner that thickness of the mulch is approximately uniform throughout the treated area and sunlight is not completely excluded from penetration to the ground surface. The straw mulch shall be applied at the rate of one and one-half tons per acre.

11.2 Wood Cellulose Fiber Mulch: The application of the wood cellulose fiber mulch shall be with the hydroseeder and shall be accomplished immediately after completion of the final tillage operation. The wood cellulose fiber mulch shall be applied at the rate of 1,000 pounds per acre in combination with water, fertilizer and seed and shall be sprayed over the soil in a uniform coat.

11.3 Anchoring Mulch: Straw or hay mulch shall be anchored in place by use of a cut-away rolling flat disk packer or by uniformly spraying the straw with the specified asphalt material at the rate of 0.10 gallon residual asphalt per square yard.

12. PROTECTION: The area shall be protected against foot and vehicular traffic by erecting adequate barricades immediately after seeding is completed, and by placing warning signs of an approved type.

13. ESTABLISHMENT: ~~The Contractor shall be responsible for the proper care of the seeded area during the period when the vegetation is being established.~~ In the event of an erosive rain before an adequate stand of vegetation is established, damaged areas shall be repaired, limed, fertilized, seeded, and mulched wholly at the Contractor's expense. This period shall extend for 30 days after the ~~completion~~ acceptance of the ~~mulching~~ project.

14. POSTPONEMENT OF SEEDING: If upon completion of the finish grading, the seeding cannot be completed during the specified periods, then the seeding shall be accomplished during the next seeding period specified. Only an amount considered sufficient by the Contracting Officer to cover payment for this work will be withheld from the progress payments. The beneficial occupancy of the facility shall not be delayed by the postponement of the seeding.

15. SODDING:

15.1 Season: Sod shall be harvested and installed only during the season of active growth, but not later than October 1.

15.2 Sodbed Preparation: At sod locations indicated on the drawings follow the procedures for seedbed preparation found in this section, but lower the finished grade sufficiently to allow for the sod thickness. After all unevenness of the soil surface has been corrected, moisten the soil surface just prior to laying the sod.

"The Contractor shall be responsible for the proper care and cutting of the seeded area during the period when the vegetation is being established and until completion of the project."

15.3 Laying the Sod: The first row of sod shall be laid in a straight line with subsequent rows placed parallel to and tightly against each other. Lateral joints shall be staggered to promote more uniform growth and strength. Care shall be exercised to insure that the sod is not stretched or overlapped and that all joints are butted tight in order to prevent voids which would cause air drying of the roots. Water sod immediately after transplanting to prevent excessive drying during progress of the work. As sodding is completed in any one section, the entire area shall be rolled. It shall then be thoroughly watered to a depth sufficient that the underside of the new sod pad and soil immediately below the sod are thoroughly wet.

15.4 Watering and Mowing:

15.4.1 First Week: Soil on sod pads shall be kept moist at all times. In the absence of adequate rainfall, watering shall be performed daily or as often as necessary during the first week and in sufficient quantities to maintain moist soil to a depth of at least 4 inches. Watering should be done during the heat of the day to help prevent wilting.

15.4.2 Second and Subsequent Weeks: Water the sod as requied to maintain adequate moisture, in the upper 4 inches of soil, necessary for the promotion of deep root growth. The first mowing shall not be attempted until the sod is firmly rooted and secure in place. Not more than 40% of the grass leaf shall be removed by the initial or subsequent mowings. The mower blade height shall be 1 inch.

"15.4.3x Duration: Mowing and watering operations shall continue from the time the sod has been placed and until final acceptance of the project."

---END---

SECTION 02831. PLANTING TREES, SHRUBS, AND GROUND COVERS

1. APPLICABLE PUBLICATIONS: The following publications of the issues listed below, but referred to hereafter by basic designation only, form a part of this specification to the extent indicated by references thereto:

1.1 American Joint Committee on Horticultural Nomenclature:

1942 Edition of Standardized Plant Names.

1.2 American National Standards Institute, Inc. (ANSI):

Z60.1-1973 USA Standard for Nursery Stock.

2. QUALITY CONTROL: Approvals, except those required for field installation, field application and field tests, shall be obtained before delivery of materials to the project site.

2.1 Certificates of Inspections:

2.1.1 Plants: All shipments or orders of plant material shall be properly inspected at the nursery or at the growing site by the authorized Federal and State authorities. All necessary inspection certificates shall accompany the invoice for each shipment or order of stock, as may be required by law for the necessary transportation, and such certificates shall be furnished prior to acceptance of the material.

2.1.2 Fertilizer: Duplicate copies of invoices for all fertilizer used shall be furnished. Invoices for fertilizer shall show the chemical analysis and quantity furnished. Upon completion of the project a final check of the total quantity of fertilizer used will be made.

2.2 Qualifications: The Contractor performing this work shall have at least five years of successful experience on projects of equivalent size and scope. Evidence of such qualifications shall be submitted for approval to the Contracting Officer prior to the beginning of any work.

3. MATERIALS:

3.1 Topsoil shall be fertile, friable, natural surface soil, such as is found in the project locality to be capable of producing satisfactory agricultural crops. Topsoil at the site will not be available for planting.

3.2 Peat shall be what is known in the trade as "peat moss" and shall be delivered in standard bales. Peat shall be free from long fibrous material and shall be well pulverized and damp before use.

3.3 Mulch shall consist of clean, dry, long needle pine straw delivered in standard bales.

02831

3.4 Commercial fertilizer shall be delivered to the site in unopened original containers bearing the manufacturer's statement of analysis, and shall contain the following minimum percentages of available plant food by weight:

For Trees		For Shrubs & Ground Covers	
16 percent nitrogen	(N)	6 percent nitrogen	(N)
4 percent phosphorus	(P)	12 percent phosphorus	(P)
8 percent potash	(K)	12 percent potash	(K)

3.5 Burlap shall be made of jute and shall weigh not less than 7.2 ounces per square yard. Substitute cloths shall possess an equal strength and resistance to tearing.

3.6 Plant Material Labels: Durable, legible labels stating in weather-resistant ink the correct plant names and size, as specified in the list of plants to be furnished, shall be securely attached to all plants, bundles, and containers of plant materials delivered at the planting site for the purpose of inspection and planting identifications. Plants that do not have labels attached will be rejected.

3.7 Wrapping material for tree trunks shall be 2 thicknesses of crinkled paper cemented together with bituminous material, or any suitable cloth, which will serve the same purpose. Wrapping material shall be in strips 8 to 10 inches wide. Twine for tying shall be a lightly tarred medium or coarse sisal (lath) yarn.

3.8 Materials for Guying and Staking:

3.8.1 Stakes for supporting trees shall be reasonably clear, straight-grained wood of not less than 2 inches by 2 inches in section. They shall be at least 8 feet long for tree item. Rough-sawed stakes may be acceptable if free from long slivers, bark, or other defects.

3.8.2 Wires for guying trees to supporting stakes shall be pliable galvanized iron or steel of No. 12 gauge.

3.8.3 Hose used for covering wire shall be at least 1/2-inch rubber hose.

3.9 Plant Material: Plants may be inspected at the place of growth, but such inspection shall not preclude the right of rejection at the site.

3.9.1 Nomenclature: The scientific and common names of plants herein specified conform with the approved names given in "Standardized Plant Names" (1942 Edition) prepared by the American Joint Committee on Horticultural Nomenclature.

3.9.2 Quality and Size: Plants shall be in accordance with ANSI Z60.1. All plants shall have a normal habit of growth and shall be sound, healthy, vigorous, and free from insect infestations and plant diseases. Plants shall be of specimen quality. The minimum acceptable size of all plants, measured before pruning, with branches in normal position, shall conform to the measurements specified in the list of plants to be furnished. Plants larger in size than specified may be used, but the use of larger plants will make no change in contract price. If the use of larger plants is approved, the ball of earth or spread of roots shall be increased proportionately.

3.9.3 Specimen Plant: Such a plant shall have an appearance which approaches the optimum form and density characteristics for the particular species and variety.

3.10 Matting for Erosion Control: Matting shall conform to that specified in the section entitled "Establishing Vegetation".

4. REQUIREMENTS: The work includes providing labor, tools, equipment, appliances and materials, plants, ground covers, shrubs and trees, and the performing of all operations necessary to provide the work complete in place.

5. DIGGING UP, WRAPPING AND HANDLING:

5.1 Balled Plants: Plants designated "B&B" in the list of plants to be furnished, shall be adequately balled with firm natural balls of soil in sizes according to AAN Standards. Balls shall be firmly wrapped with burlap or equal approved strong cloth. No balled plant shall be planted if the ball is cracked or broken either before or during the process of planting.

5.2 Bare-root Plants: Plants designated "BR" in the list of plants to be furnished shall be dug with substantially all of the root system intact, but with the earth carefully removed from the roots. The roots of these plants shall be protected from drying out either by covering with a thick coating of mud, or by wrapping with moist material, immediately after they are dug.

5.3 Options as to Method: Any plant may be furnished container-grown instead of balled or may be furnished balled instead of bare-root, if all other requirements are met. All plants furnished shall be nursery-grown except that collected material may be acceptable if furnished with increased ball sizes in accordance with ANSI Z60.1. Any substitutions shall be made only with approval of the Contracting Officer and at no change of the contract price.

5.4 Protection Against Drying Out: All plants shall be handled so that roots are adequately protected at all times from drying out and from other injury. The balls of balled plants which cannot be planted immediately on delivery shall be well protected with soil or other acceptable material.

5.5 Special Treatment and Handling for Specimen Plants: The plants scheduled as "Specimen" on the list of plants to be furnished, shall be of specimen quality, selected for shape and symmetrical branching habit which at maturity with produce a strong, full-foliaged tree or bush. Particular care shall be exercised in the digging, binding, wrapping of such specimens to assure safe loading, shipment, and handling for the entire operation of transportation from growing locations to the replanting locations shown on the drawings.

6. PLANTS REQUIRED: The species (scientific and common names) size, manner in which to furnish, and the number required to complete the planting are scheduled on the drawings. In general, all plant material furnished shall be well-branched, full-foliaged, and well-proportioned, particularly with respect to the width in relation to the height. All plant material shall be healthy stock, free of plant disease and of parasites of any objectionable or damaging nature. Plants shall be dug up and prepared for shipment in a manner that will not cause any serious damage to the branches, shape, and future development of the plants after replanting.

6.1 Substitutions: Plants of other kinds than those named in the list of plants to be furnished will not be accepted unless specifically approved in writing by the Contracting Officer.

7. SHIPMENT AND DELIVERY: The Contractor shall promptly notify the Contractor's Quality Control Representatives, in advance, when the plant material is to be delivered and the manner of shipment, and shall furnish therewith an itemized list in duplicate of the actual quantity of plant material in each delivery, in order to insure satisfactory coordination of delivery and to expedite the required inspection at the point of delivery. The itemized list in duplicate of the plant material for each delivery shall include the pertinent data in the form as specified in the list of plants to be furnished. This list and the necessary inspection certificates to accompany each plant and/or shipment shall be furnished prior to acceptance and planting of the plant material. When shipment is made by truck, all plant material shall be packed to provide adequate protection against climatic, seasonal, and breakage injuries during transit. The tops shall be securely covered with tarpaulin or canvas to minimize windwhipping and drying. When shipment is made by rail, box cars shall be carefully packed and adequately ventilated in accordance with the plant requirements to prevent "sweating" of the plant during transit. Shipments made by rail to local or nearby freight yards shall be given special attention to insure prompt delivery and careful handling therefrom to the point of final delivery at the planting job site. Under no circumstances shall balled plants be dropped from box cars or trucks to the ground. A suitable method of handling shall be employed to insure the careful, workmanlike delivery of heavy, balled plants to preclude cracked or "mushroomed" plant balls at the point of delivery.

8. PLANTING SEASON: The exterior planting season shall be from November 15 through March 15 for trees and from November 15 through March 31 for shrubs and ground covers. Actual planting shall be performed only at times

during this period when weather conditions are suitable and in accordance with local accepted practices. Interior planting may be done at any time.

9. OBSTRUCTIONS BELOW GROUND: Any rocks or other underground obstructions shall be removed to the depth necessary to permit proper planting according to plans and specifications. If underground construction, obstructions, or rocks are encountered in excavation of planting areas, other locations for the planting may be selected by the Contracting Officer.

10. PLANTING OPERATIONS:

10.1 Layout of Major Planting: Locations for plants and outlines of areas to be planted shall be marked on the ground by the Contractor before any excavation is made. All such locations shall be approved before excavation for planting is begun.

10.2 Excavation for planting shall include the stripping and stacking of all acceptable topsoil encountered within the areas to be excavated for trenches, tree hole, plant pits, and planting beds. Except as otherwise indicated on the drawings, excavation of trenches, tree holes, plant pits, and planting beds shall extend to the required subgrades as indicated on the drawings but in no case shall be less than as specified hereinafter. Plant pits shall be circular in outline and shall have vertical sides to at least 18 inches below grade and shall have flat bottoms. The minimum depths of plant pits, specified below, shall be measured from finished grade.

10.3 Size of Pits: Diameter of pits for all shrubs shall be at least 1 foot greater than the ball. Minimum depth of pits for all shrubs shall be 16 inches, and this depth shall be increased as much as may be necessary to provide a minimum of 4 inches of topsoil in the bottom of the pit, and still accommodate the ball or roots when the plant is set to grade. Diameter of pits for trees shall be at least 2 feet greater than the ball. Minimum depth of pits for trees shall be 2 feet, and this depth shall be increased as much as necessary to provide a minimum of 4 inches of topsoil in the bottom of the pit and still accommodate the ball or roots when the plant is set to grade.

10.4 Preparation of Planting Areas: Before excavations are made, the surrounding turf shall be covered in a manner that will satisfactorily protect all turfed areas that are to be trucked over and upon which soil is to be temporarily stacked pending its removal or reuse for the filling of holes, pits, and beds.

10.5 Planting Beds: All planting beds, the general outlines of which are shown on the drawings, shall, after completion of planting therein, be thoroughly spaded or cultivated to a depth of not less than 4 inches, edged, raked free of all debris.

10.6 Disposal of Excess Soil: All excess excavated topsoil or other soils shall be placed on the Station in the location designated by the Contracting Officer.

10.7 Drainage of Pits and Beds: Should any unusual conditions be encountered such as hard pan or impervious clay, drainage shall be provided by holes driven in the bottom of each plant pit.

10.8 Setting Plants: Except as otherwise specified, plants shall be planted in pits and shall be set at such level that, after settlement, they bear the same relation to the finished grade of the surrounding ground as they bore to the grade of the ground from which they were dug.

10.8.1 General: Plants shall be planted in an approved topsoil which shall be thoroughly settled by watering or by tamping. A shallow saucer shall be formed around each plant by placing a ridge of topsoil around the edge of each filled-in pit. The Contractor shall furnish and deliver from outside sources acceptable topsoil. Soil from outside sources shall be entirely free from roots, stolons, or bulbs or perennial grasses and noxious weeds. Topsoil, prior to use for backfilling planting pits, shall first be thoroughly mixed with commercial fertilizer and peat moss in the following amounts:

10.8.1.1 Commercial fertilizer shall be incorporated with topsoil at the rate of 1/2 pound, actual weight, of 6-12-12 analysis fertilizer to 1 cubic yard of soil for shrubs and ground covers, or in amounts ranging from 1/2 pound 16-4-8 analysis fertilizer each for the smallest trees to 1 pound fertilizer each for the largest trees in the list of plants to be furnished.

10.8.1.2 Peat moss shall be incorporated with topsoil at the rate of 1/3 bushel for each shrub and 1/2 bushel for each tree. For the purpose of this work, all topsoil will be considered to shrink 10 percent of its volume as measured after placement. Provision shall be made for additional shrinkage after peat moss is added. A shallow saucer, capable of holding water, shall be formed about each plant by constructing a "dike" of topsoil around the edge of each filled-in pit, as illustrated in detail on the planting plan.

10.8.2 Balled Plants: (B&B) shall be planted with topsoil carefully tamped around and under the base of each ball to fill voids. Cloths, ropes, wires, and other wrapping material shall not be removed from the tops of balls.

10.8.3 Bare-root Plants: Roots of bare-root (BR) plant shall be properly spread out, and the topsoil carefully worked in among the roots. Broked or frayed roots shall be cut off clean.

10.9 Matting for Erosion Control: Where indicated on the drawings, install the matting as specified in the section entitled "Establishment of Vegetation".

11. SETTING AND WRAPPING OF TREES: Trees shall be set plumb and rigidly braced in position until the soil has been tamped solidly around the ball and roots. Promptly after planting, the trunks of trees shall be spirally wrapped to the height of the second branches. Wrappings shall be tied securely in place.

12. STAKING: Trees shall be staked immediately after they are planted. All planted trees shall be staked in accordance with the following:

12.1 Single Staking: All trees less than 2 inches in caliber shall be supported in upright position by stakes, one to each tree. Stakes shall be driven at least 3 feet into the ground within 12 inches of the trunk of the tree. Stakes shall be driven vertically, and not twisted or pulled at any time in such a manner as to cause injury to ball or roots. The tree shall be guyed near the top of the stakes by means of two strands of No. 12 gauge wire, encased in rubber hose as necessary to prevent contact with the bark, and shall be drawn taut and securely fastened to the stake.

12.2 Double Staking: All trees furnished 2 inches or over in caliber shall be staked in accordance with the following. Trees shall be supported in an upright position by two stakes. The stakes shall be spaced on opposite sides of the tree approximately 18 inches from the trunk. Stakes shall be driven vertically into the ground to a depth of at least three feet, and shall not be twisted or pulled in such manner as to cause injury to ball or roots. The tree shall be guyed to each stake near the top, with two strands of No. 12 gauge galvanized wire. Guys shall be enclosed in rubber hose as necessary to prevent contact with the bark, and shall be drawn taut and securely fastened to the stakes with wire staples.

13. PRUNING: Pruning shall be generally limited to the minimum necessary to remove injured twigs and branches, and to compensate for the loss of roots during transplanting, but never to exceed 1/3 of the branching structure. Cuts over 3/4-inch diameter shall be painted with an approved tree-wound paint. Never cut a leader.

14. MULCHING: All plants shall be mulched within 2 days after planting with a layer 2 inches deep, when settled, of mulch material, entirely covering the saucer around each plant.

15. CLEANUP OF SITE: At the end of each day's work, the Contractor shall pick up all paper bags and other debris resulting from his work and remove them from site. At the completion of the work, the Contractor shall clear the site of all rubbish and excess materials and leave the site in a neat and workmanlike condition. All planting areas shall be free of weeds at the completion of work.

16. GUARANTEE: The Contractor shall guarantee all plants for a period of 1 year after completion of the contract. The Government shall maintain plants, shrubs and trees during this period.

16.1 Replacement: During the guarantee period, plants which die or which, in the opinion of the Contracting Officer, are in an unhealthy or badly impaired condition shall be replaced by the Contractor as soon as is reasonably possible after the unsatisfactory condition is evident. No replacement will be required in any season definitely unfavorable for planting the kinds of plants involved. At the conclusion of the guarantee period, the

Contracting Officer will make an inspection of the work to determine conditions of all plants. All plants then not in a healthy, growing condition will be noted. As soon as seasonal conditions permit, all plants so noted shall be removed and replaced with plants of the same kinds and sizes as originally specified. Such replacements shall be made in the same manner as specified for the original planting and at no extra cost to the Government.

---END---

SECTION 03300. CAST IN PLACE CONCRETE

1. APPLICABLE PUBLICATIONS: The following publications of the issues listed below, but referred to elsewhere by basic designation only, form a part of this specification to the extent indicated by the references thereto:

1.1 Federal and Military Specifications:

SS-S-1401B	Sealing Compound, Hot Applied, for Concrete and Asphalt Pavements.
TT-C-800A & Am 1	Curing Compound, Concrete, For New and Existing Surfaces.
MIL-B-19235A	Bonding Compound, Concrete.

1.2 U. S. Department of Commerce Product Standard:

PS 1-74	Construction and Industrial Plywood.

1.3 American Concrete Institute (ACI):

ACI 211.1-74	Recommended Practice for Selecting Proportions for Normal Weight Concrete.
ACI 305-72	Recommended Practice for Hot Weather Concreting.
ACI 306-66	Recommended Practice for Cold Weather Concreting.
ACI 315-74	Manual of Standard Practice for Detailing Reinforced Concrete Structures.
ACI 318-71	Building Code Requirements for Reinforced Concrete.
ACI 347-68	Recommended Practice for Concrete Formwork.

1.4 American Society for Testing and Materials (ASTM):

A 185-73	Welded Steel Wire Fabric for Concrete Reinforcement.
A 615-76a	Deformed and Plain Billet-Steel Bars for Concrete Reinforcement.
C 29-76	Unit Weight of Aggregate.
C 31-69(1975)	Making and Curing Concrete Test Specimens in the Field.
C 33-77	Concrete Aggregates.
C 39-72	Compressive Strength of Cylindrical Concrete Specimens.
C 87-69(1975)	Effect of Organic Impurities in Fine Aggregate on Strength of Mortar.
C 94-74a	Ready-Mixed Concrete.
C 125-76	Concrete and Concrete Aggregates; Definition of Terms Relating To.
C 136-76	Sieve or Screen Analysis of Fine and Coarse Aggregates.
C 138-75	Unit Weight, Yield, and Air Content (Gravimetric) of Concrete.
C 143-74	Slump of Portland Cement Concrete.
C 150-77	Portland Cement.
C 156-74	Water Retention by Concrete Curing Materials.
C 171-69(1975)	Sheet Materials for Curing Concrete.

C 172-71	Sampling Fresh Concrete.
C 173-75	Air Content for Freshly Mixed Concrete by the Pressure Method.
C 227-71(1976)	Potential Alkali Reactivity of Cement-Aggregate Combinations (Mortar Bar Method).
C 231-75	Air Content for Freshly Mixed Concrete by the Pressure Method.
C 260-74	Air-Entraining Admixtures for Concrete; Specifications.
C 309-74	Liquid Membrane-Forming Compounds for Curing Concrete.
C 360-63(1975)	Ball Penetration in Fresh Portland Cement Concrete.
C 418-76	Abrasion Resistance of Concrete.
D 75-71	Sampling Aggregates.
D 226-75	Asphalt Saturated Roofing Felt for Use in Waterproofing and in Constructing Built-Up Roofs.
D 1329-72	Low-Temperature Characteristics of Rubber and Rubber-Like Materials by a Temperature Retraction Procedure.
D 1751-73	Preformed Expansion Joint Fillers for Concrete Paving and Structural Construction (Non-Extruding and Resilient Bituminous Types).
D 1752-67(1973)	Preformed Sponge Rubber and Cork Expansion Joint Fillers for Concrete Paving and Structural Construction.
D 1850-74	Concrete Joint Sealer, Cold Application Type.
G 21-70(1975)	Resistance of Synthetic Polymeric Materials to Fungi.

1.5 Concrete Reinforcing Steel Institute (CRSI):

Manual of Standard Practice for Reinforced Concrete Construction.

1.6 American Welding Society (AWS):

D 12.1-75	Welding Reinforcing Steel, Metal Inserts and Connections in Reinforced Concrete Construction.

1.7 Portland Cement Association (PCA):

Concrete Pavement Inspector's Manual.

2. QUALITY CONTROL: Unless otherwise specified herein, requirements for supervision, inspection, sampling, testing, approval, directing, authorizing, and other requirements of similar import shall be the responsibility of the Contractor Quality Control representative. Approvals, except those required for field installations, field applications, and field tests shall be obtained before custom fabrication is started and before delivery of materials or equipment to the project site. All materials and materials sources shall be approved not less than 30 days prior to their use in the work.

2.1 Certified Laboratory Test Reports: The testing requirements for materials incorporated in referenced documents will be waived provided the manufacturer submits certificates stating that previously manufactured

materials meet testing requirements specified, and that the materials furnished for this project are of the same type, quality, manufacture and make as that tested. Copies of the test reports need not be submitted except as specifically requested by the Contracting Officer.

2.1.1 Sample Certificate: The certificate shall not contain statements that could be interpreted to imply that the proposed material does not meet all requirements for the specified material, i.e.; "as good as"; "achieve the same end use and results as materials formulated in compliance with the specified material"; "exceed or equal service and performance for specified material". The certificate should be simple and should state only that the proposed material meets the requirements for the specified material.

SAMPLE CERTIFICATE

The manufacturer hereby certifies that previously manufactured materials have been tested by recognized laboratories, that the tested material is of the same type, quality, manufacture and formulation as that furnished for this project, and that the tested material meets all the requirements of the following specifications:

SPECIFIED MATERIAL	TESTED MATERIAL
C-150-74	John Doe Company Portland Cement

SIGNATURE AND TITLE

2.2 Shop Drawings: Shop drawings of the following shall be submitted to and approved by the Contracting Officer.

2.2.1 Reinforcing Steel Drawings: Shop drawings for reinforcing steel shall be prepared in accordance with ACI 315, entitled "Manual of Standard Practice for Detailing Reinforced Concrete Structures". They shall indicate bending diagrams, assembly diagrams, splicing and laps of rods, and shapes, dimensions and details of bar reinforcing and accessories. Scaled dimensions from structural drawings shall not be used in determining the lengths of reinforcing rods.

3. DELIVERY AND STORAGE:

3.1 Cement: Cement shall be stored immediately upon receipt at the site of the work. Cement in bags shall be stored in a suitable weatherproof structure which shall be as air-tight as practicable; floors shall be elevated above the ground a distance sufficient to prevent the absorption of moisture. Bags shall be stacked close together to reduce circulation of air but shall not be stacked against outside walls; the manner of storage shall permit easy access for inspection and identification of each shipment. Bulk cement shall be transferred to elevated airtight and weatherproof bins. At the time of use all cement shall be free-flowing, and free of lumps. Cement that has been in

storage longer than 6 months will be tested by standard mortar tests or other tests as deemed necessary by the Government to determine its suitability for use and such cement shall not be used without approval of the Contracting Officer.

3.2 Aggregates: Aggregates shall be stored on areas covered with tightly laid wood planks, sheet metal, or other hard and clean surface, and in a manner that will preclude the inclusion of foreign material. Aggregates of different sizes shall be stored in separate piles. Stock piles of coarse aggregate shall be built in horizontal layers not exceeding 4 feet in depth to minimize segregation. Should the coarse aggregate become segregated, it shall be remixed to conform to the grading requirements given hereinbefore. Allow aggregates to drain until aggregates have reached a uniform moisture content before they are used.

3.3 Reinforcement: Reinforcement shall be stored in a manner that will avoid excessive rusting or coating with grease, oil, dirt, and other objectionable materials. Storage shall be in separate piles or racks so as to avoid confusion or loss of identification after bundles are broken.

3.4 Admixtures: Admixtures shall be stored in a manner that will not damage the containers. An air-entraining admixture which has been in storage for longer than 6 months or which has been subjected to freezing shall not be used until retest proves it to be satisfactory.

4. CONCRETE:

4.1 Contractor Furnished Mix Design: Concrete shall be designed in accordance with ACI 211.1. A concrete mix design for each strength of concrete included in the work shall be furnished by the Contractor for approval. Tests for yield shall be as specified hereinafter. Slump shall be between 2 inches and 4 inches. The concrete shall have a minimum 28-day compressive strength, maximum aggregate size, minimum cement factor (bags/cu.yd.), and a maximum water-cement ratio (gal. per bag) respectively, as follows:

Location	Minimum 28-Day Compressive Strength (psi)	Maximum Agg. Size (inches)	Minimum Cement Factor (Bags/cu. yd.)	Maximum Water-Cement Ratio (Gal. per Bag)
Floor Slabs	4,000	1"	6.0	6.30
Exterior Slabs	4,000	1"	6.0	5.75
Columns	4,000	1"	6.0	5.75
Walls, Footings, and Pile Caps	4,000	1"	6.0	5.75

Exterior Sign Foundation	4,000	1"	6.0	5.75
All Concrete for Sewage Pump Station	4,000	1"	6.0	5.75
Walks and Curbs	3,000	1"	5.5	6.40
Drainage Structures	2,500	1"	5.5	6.40
Utility Manholes and Handholes	2,500	1"	5.5	6.40
Prestressed Piles	5,000	1"	7.0	4.75
All Other Concrete Except Prestressed	4,000	1"*	6.0	5.75

* Except as specified in paragraph entitled "Coarse Aggregate".

4.2 Air-Entraining Concrete: Air-entrained concrete shall be provided for all concrete exposed to the weather. Air-entrainment shall be accomplished by using an air-entraining admixture. Air-entrainment by the use of air-entraining cement is not acceptable. If the entrained air content falls below the specified limit, an air-entraining admixture shall be added in sufficient quantity to bring the entrained air content with the specified limits. Air-entraining admixtures shall be added in solution in a portion of the mixing water by means of a mechanical batcher in a manner that will ensure uniform distribution of the agent throughout the batch. Except as specified otherwise hereinafter, the air content of freshly mixed air-entrained concrete shall be as follows:

Maximum Aggregate Size	Amount of Air (percent Volume of Concrete)
1-inch	6 ± 1 (except 4.5% to 6.0% for prestressed concrete)
3/8 inch	7-1/2 ± 1

The percentage of air shall be determined by ASTM C231 on samples of concrete during placing of the concrete in the forms, except that for concrete made with slag aggregate, ASTM C138 or ASTM C173 shall be used.

5. MATERIALS:

5.1 Cement: Cement shall be Type I conforming to ASTM C150 for all concrete, except cement shall be Type II conforming to ASTM C150 for all concrete at Sewage Pump Station. All cement for exposed concrete surfaces shall be of the same manufacturer.

5.2 Water: Water for mixing and curing, including free moisture and water in the aggregates, shall be fresh, clean and potable. Turbidity of the water shall not exceed 2,000 parts per million. Mortar specimens made in accordance with ASTM C87, when compared with similar mortar specimens made with water of known satisfactory quality and using the same sand and cement, shall show no unsoundness or marked change in setting, and the compressive strength of mortar specimens at 28 days shall be at least 95 percent of the compressive strength of the specimens made with water of known satisfactory quality.

5.3 Aggregates: Aggregates shall conform to ASTM C33, except as modified herein. All aggregates for exposed concrete surfaces shall be obtained from one source. Aggregates shall be free from any substance which may be deleteriously reactive with the alkalies in the cement in an amount sufficient to cause excessive expansion of the concrete. Acceptability of the aggregate shall be based upon satisfactory evidence furnished by the Contractor that the aggregate is free from such materials. Such evidence shall include service records of concrete of comparable properties under similar conditions of exposure or certified records of test by a testing laboratory approved by the Contracting Officer. Tests shall conform to ASTM C227. Aggregates shall be washed before use.

5.3.1 Fine Aggregates: Fine aggregates from different sources of supply shall not be mixed or stored in the same stockpile, or used alternately in the same structure. The fineness modulus of fine aggregate shall be not less than 2.40 or greater than 2.90 except that for 0.375 inch maximum size, the fineness modulus shall be not less than 2.60 and not more than 3.00. Fineness modulus shall be defined according to ASTM C 125. Aggregate which shows a variation in fineness modulus greater than 0.20 more or less than that of the representative sample submitted will be rejected, unless at the option of the Contracting Officer the aggregate is accepted subject to such changes in the concrete proportions as may be directed by the Contracting Officer and for which no change in the contract price will be made. Fine aggregate shall be graded as specified in ASTM C33.

5.3.2 Coarse Aggregate: Coarse aggregate shall not exceed 3/8-inch for pan type stairs. Grading of coarse aggregate shall be in accordance with the following tables with respect to the coarse aggregate size specified:

Size of Coarse Aggregate (inches)	Percentage by Weight Passing Sieves							
	1-1/2"	1"	3/4"	1/2"	3/8"	#4	#8	#16
1	100	90-100	--	25-60	--	0-10	0-5	--
3/4		100	90-100	--	20-55	0-10	0-5	--
1/2			100	90-100	40-70	0-15	0-5	--
3/8				100	85-100	10-30	0-10	0-5

5.4 Admixtures: Admixtures shall be used in the concrete as specified hereinafter. Chemical admixtures shall not be used without the written permission of the Contracting Officer. When more than one admixture is used in a mix, the Contractor shall furnish satisfactory evidence that the admixtures to be used are compatible in combination with the cement and aggregates to be used for the project and will be suitable at the job temperatures. The cost of the admixtures to be used for this project shall be included in the contract bid price.

5.4.1 Air-entraining Admixtures: Air-entraining admixtures conforming to ASTM C260 shall be used in all concrete specified to be air-entrained.

5.5 Reinforcement:

5.5.1 Reinforcing Bars: All reinforcing steel shall be deformed. Reinforcing bars shall conform to ASTM A615, Grade 60.

5.5.2 Welded Wire Fabric: Welded wire fabric shall be electrically-welded fabric of cold-drawn wire of gage and mesh size shown on the drawings or specified herein, and shall conform to ASTM A185. Where the size, mesh and weight of the fabric are not indicated or specified otherwise, fabric shall be 6 inch by 6 inch mesh, No. 6 gage of 0.192-inch nominal diameter wire weighing approximately 42 lbs. per 100 square feet.

5.6 Waterstops: Elastomer waterstops shall be made of natural or synthetic rubber or polyvinyl chloride; shall be dense, homogeneous, free from porosity and other imperfections, and symmetrical in shape. Materials shall be resistant to chemical action with Portland cement; acids and alkalies; and not affected by fungi. They shall show no effect when immersed for 10 days at room temperature in 10 percent solutions of sulphuric acid, hydrochloric acid, and sodium chloride; and a saturated lime solution. Resistance to fungi shall be determined by ASTM G21. Material shall not be adversely affected when subjected to tests for low temperature brittleness 35 degrees F, in accordance with ASTM D 1329, and for water absorption maximum 5 percent by weight. Waterstops not indicated otherwise shall be 6 inches by 3/8 inch.

5.7 Materials for Curing Concrete:

5.7.1 Sheet Materials: Waterproof paper, polyethylene sheeting, and polyethylene coated burlap shall conform to ASTM C171.

5.7.2 Liquid Membrane Forming Compound: Liquid membrane forming compound shall conform to ASTM C309, white-pigmented Type 2, and be free of paraffin or petroleum.

5.7.3 Liquid Chemical Curing Compound: Liquid chemical compound curing shall be accomplished by the application of a suitable sealer-hardener designed for sealing and hardening in addition to curing of the concrete, applied by the method and at the rate recommended by the manufacturer. It shall not reduce the adhesion of tile, paint, waterproofing or other material

to be applied to the concrete. The chemical compound shall be free of petroleum resins or waxes. The loss of moisture when determined in accordance with ASTM C156 shall not exceed 0.055 gram per square centimeter of surface or, if determined by TT-C-800, the loss of moisture shall not exceed 0.037 gram per square centimeter of surface. The abrasion loss shall not exceed 80 percent of that of the same concrete, untreated, when tested in accordance with ASTM C 418 at age 28 days. The adhesion to the treated concrete shall be at least 90 percent of the adhesion to the same concrete, untreated. The test for adhesion will consist of forming mortar or concrete slabs, three moisture cured and three liquid chemical cured for each type of covering to be applied. After curing for 28 days, the slabs shall be permitted to dry in air. The covering shall be adhered to the troweled face of the slabs with the adhesive to be used in the work. After the adhesive has set, cuts one inch apart and 6 to 10 inches long shall be made through the adhered covering, forming strips to one end of which a calibrated spring type balance or other device shall be attached. The strips shall be peeled off at a rate of 2 to 10 inches per minute. The pull required to peel the covering from the slabs shall be the average of three specimens. Do not use liquid chemical curing compound in hot weather.

5.8 Joint Sealing Materials: Joint sealing materials shall conform to ASTM D1850 or SS-S-1401, except that all joints exposed to the weather shall be sealed with material conforming to SS-S-1401. Use back-up material and primer of type recommended by joint sealing material manufacturer.

5.9 Expansion Joint Filler: Expansion joint filler shall be preformed type conforming to ASTM D1751 or D1752.

5.10 Slots and Inserts for Masonry Anchors:

5.10.1 Slots: Dovetail anchor slots shall be formed of zinc-coated sheet steel, U. S. 24 minimum gage, shall be provided in concrete faced with or abutting masonry, and elsewhere as indicated.

5.10.2 Inserts: Inserts shall be formed of 9 minimum gage zinc-coated steel wire, engaged between a two-piece half-round wood core, and having loops for embedding in concrete.

5.10.3 Pre-Mixed Grout: Pre-mixed, non-metallic, non-shrink, non-corrosive grout providing a minimum compressive strength of 8000 psi at 28 days.

5.11 Vapor Barrier: Vapor barrier material shall be polyethylene sheeting of not less than 6-mil nominal thickness.

5.12 Building Paper: Felt, ASTM D226, 15 pound type, unless otherwise indicated.

5.13 Wedge (Slotted) Insert: Malleable iron insert with bolts, nuts, and washers including horseshoe shims, Hohmann & Barnard, Inc. No. HW-120, located at sloping brick sills.

6. FORMS:

6.1 General Requirements: Forms shall be provided for all concrete not indicated or specified otherwise. Forms shall be set true to line and grade and maintained so as to insure completed work within the allowable tolerances specified, and shall be mortar-tight. The Contractor shall be responsible for the adequacy of forms and form supports. Bolts and rods used for internal ties shall be arranged so that when the forms are removed, all metal will be not less than 2 inches from any surface for concrete which will be exposed to destructive agents, not less than 1-1/2 inches for concrete exposed to weathering and for water-tight and oil-tight concrete, and not less than 1 inch for unexposed concrete. Bolts or rod type form ties that must be removed when forms are removed shall not be used for watertight forms. Wire ties shall not be used where the concrete surface will be exposed to weathering and where discoloration will be exposed. All form work shall be provided with adequate clean-out openings to permit inspection and easy cleaning after all reinforcement has been placed. In columns, walls, and similar members of small dimensions the height of forms for each vertical lift shall not exceed 6 feet unless suitable openings are provided at not more than 6-foot vertical intervals to permit proper placing of the concrete. Where forms for continuous surfaces are placed in successive units, the forms shall be fitted over the completed surface to obtain accurate alignment of the surface and to prevent leakage of mortar. Panel forms shall be constructed to provide tight joints between panels. All forms shall be constructed so that they can be removed without damaging the concrete. All exposed joints, edges, and external corners shall be chamfered a minimum of 3/4-inch unless specified otherwise hereinafter. Forms for heavy girders and similar members shall be constructed with the proper camber.

6.2 Materials for Forms: Forms shall be of wood, plywood, steel or other suitable material, except as otherwise specified. Forms for concrete sidewalks, except on curves, shall be metal; on curves, flexible or curved forms of metal or wood may be used. Wood forms, for surfaces exposed to view in the finished structure and requiring a standard finish, shall be tongue-and-groove boards or plywood. For unexposed surfaces, undressed square-edge lumber may be used. Forms for surfaces requiring special finishes shall be plywood or tongue-and-groove boards, or shall be lined with plywood, a non-absorptive, hard-pressed fiberboard, absorptive-type lining or other suitable material. Tongue-and-groove boards shall be dressed to a uniform thickness, evenly matched, and free from loose knots, holes, and other defects which would affect the concrete finish. Plywood, other than for lining, shall be concrete-form plywood not less than 5/8-inch thick and shall conform with Department of Commerce Product Standard PS-1. Surfaces of steel forms shall be free from irregularities, dents, and sags.

6.3 Coating: Before placing the concrete, the contact surfaces of forms shall be coated with a non-staining mineral oil or suitable non-stainings form coating compound, or shall be given two coats of nitro-cellulose lacquer, except as specified otherwise. Mineral oil shall not be used on forms for surfaces which are to be painted. For surfaces not exposed to view in the finished structure and when the temperature is above 40 degrees Fahrenheit, sheathing may be wetted thoroughly with clean water. All excess coating shall be removed by wiping with cloths. Reused forms shall have the contact surfaces cleaned thoroughly; those which have been coated shall be given an additional application of the coating.

6.4 Forms for Round Columns: Forms shall be spirally constructed of laminated plies of fiber, with each ply not less than 6 inches wide. Plies shall be laminated with a non-water-sensitive adhesive. The exterior surface shall be uniformly impregnated for weather and moisture protection. The three plies nearest to the interior surface of the form shall be deckled or scarfed and overlapped to minimize the spiral gaps or seams on the column surface. The interior ply shall allow uniform moisture penetration to prevent unequal expansion of the fibers and consequent dimpling of the concrete surface. Forms shall have a suitable vapor barrier within the wall to prevent further moisture penetration, to protect the dry strength of the outer plies, and to retain moisture for proper hydration.

6.5 Removable Tongue and Groove Construction Joint Forms: Joint forms, of sizes and shapes indicated, shall be fabricated from 16 gage galvanized steel. Fabricate forms with holes for stake pins and reinforcing as indicated. Stake pins shall be fabricated from 18 gauge steel, compatible with joint forms and of length required. Install forms in strict accordance with manufacturer's directions.

6.6 Tolerances and Variations: The Contractor shall set and maintain concrete forms to ensure that, after removal of the forms and prior to patching and finishing, no portion of the concrete work will exceed any of the tolerances specified. Variations in floor levels shall be measured before removal of supporting shores. The Contractor shall be responsible for variations due to deflection, when the latter results from concrete quality or curing other than that which has been specified. The tolerances specified shall not be exceeded by any portion of any concrete surface; the specified variation for one element of the structure will not be applicable when it will permit another element of the structure to exceed its allowable variations. Except as otherwise specified hereinafter, tolerances shall conform to ACI 347.

7. PROPORTIONING, MEASUREMENT AND MIXING:

7.1 Proportioning of Materials: Proportioning of materials shall be accomplished by weighing, except as otherwise provided herein. In urgent situations, volumetric proportioning may be used temporarily, if permitted by the Contracting Officer, who will stipulate the length of the period during which volumetric proportioning may be used. The Contractor shall furnish the

necessary equipment and shall establish accurate procedures for determining the quantities of free moisture in the aggregates, the true volume of the fine aggregate if volumetric proportioning is used, and the air content of the freshly mixed concrete if air-entrained concrete is used. Moisture, volumetric and air determinations shall be made at intervals as specified hereinafter under testing requirements. Allowable tolerances for measuring cement and water shall be 1 percent; for aggregates 2 percent; and for admixtures 3 percent.

7.1.1 Weight Measurement: The fine aggregate and each size of coarse aggregate shall each be weighed separately. Cement in standard packages (bags) need not be weighed, but bulk cement or fractional packages shall be weighed on a scale separate from that used for weighing the other material.

7.1.2 Volumetric Measurement: The weight proportions shall be transposed into equivalent volumetric proportions by weighing representative samples of the aggregates in the condition in which they will be measured and in accordance with ASTM C29. In determining the true volume of the fine aggregate, allowance shall be made for the bulking effect from the moisture contained therein. Suitable allowances shall also be made for variations in the moisture conditions of the aggregates.

7.2 Mixing: All concrete shall be machine mixed. In emergencies, the mixing may be done by hand if so authorized by the Contracting Officer. Mixing shall begin within 30 minutes after the cement has been added to the aggregates. The time of mixing after all cement and aggregates are in the mixer drum shall be not less than one minute for mixers having a capacity of one cubic yard or less; for mixers of larger capacities, the minimum time shall be increased 15 seconds for each additional cubic yard or fraction thereof of additional capacity. A reduction in the aforementioned mixing times shall be permitted in accordance with ASTM C94 if mixer performance tests, made at the Contractor's option and at his expense, indicate adequate mixing with the reduced time. All mixing water shall be introduced in the drum before one-fourth of the mixing time has elapsed. The entire contents of the mixer drum shall be discharged before recharging. The time elapsing between the introduction of the mixing water to the cement and aggregates or the cement to the aggregates and placing of the concrete in final position in the forms shall not exceed 60 minutes, if the air temperature is less than 85 degrees Fahrenheit and 45 minutes if the air temperature is equal or greater than 85 degrees Fahrenheit. The retempering of concrete, i.e., remixing with or without additional cement, aggregate, or water, will not be permitted.

7.3 Ready-Mixed Concrete: Ready-mixed concrete shall conform to ASTM C94 as modified herein. Ready-mixed concrete is defined in this specification as concrete produced regularly by a commercial establishment and delivered to the purchaser in the plastic state. Ready-mixed concrete may be used provided that (a) the plant has sufficient capacity and transportation equipment to deliver the concrete at the rate desired and (b) the plant meets the requirements specified hereinbefore for equipment, measurement of materials, and mixing, except as modified herein. The cement, aggregates, water and

admixtures shall conform to all applicable requirements of this specification. Ready-mixed concrete not specified otherwise hereinafter shall be mixed and delivered by one of the following methods:

7.3.1 Truck Mixing: Concrete shall be mixed and delivered in a truck mixer. Mixers shall be charged with a ribbon fed mixture of aggregates and cement, or, in the absence of facilities for ribbon feeding, the aggregates shall be charged before the cement. When mixing is begun during or immediately after charging, a portion of the mixing water not in excess of that required to produce the minimum acceptable slump, shall be added ahead of, or with, the other ingredients. Total mixing shall be for not less than 50 nor more than 100 revolutions of the drum at the manufacturer's rated mixing speed after all ingredients including water are in the drum except as follows: After 30 to 75 revolutions of the drum the slump shall be tested and additional water shall be added if necessary to produce the required slump; if additional water is necessary, mixing shall be continued for at least 20 revolutions after the water is added. Mixing speed shall be not less than 4 rpm for revolving drum mixers, and not less than 4 rpm nor more than 16 rpm for open-top mixers. Any turning of the drum during transportation shall be at the speed designated by the manufacturer of the equipment as agitating speed. Each batch of concrete delivered at the job site shall be accompanied by a time slip issued at the batching plant, bearing the time of departure therefrom and the signature of the inspector. Discharge of concrete from the drum shall be completed within 1 hour or before the drum completes 250 revolutions after the introduction of water to the cement and aggregates.

7.3.2 Combination Central Plant and Truck Mixing (Shrink Mixing): Concrete shall be partially mixed in a central plant mixer and the mixing completed in a truck mixer. The mixing time in a central-plant mixer shall be the minimum required to intermingle the ingredients and shall not exceed 30 seconds. The mixing shall be completed in a truck mixer as specified hereinbefore under truck mixing.

7.3.3 Central-Plant Mixing: Concrete shall be mixed completely in a stationary mixer at a plant and transported to the site of the work in a truck agitator or a truck mixer operating at a speed of rotation designated by the manufacturer as agitating speed. Mixing shall begin within 30 minutes after cement has been added to aggregates. When authorized in writing by the Contracting Officer, non-agitation equipment approved by him may be used for transporting concrete. The time lapse between the introduction of the mixing water to the cement and aggregates and the placing of concrete in final position in the forms, shall not exceed: (a) for agitating equipment - 60 minutes, air temperature less than 85 degrees Fahrenheit, 45 minutes, air temperature equal or greater than 85 degrees Fahrenehit (b) for non-agitating equipment - 30 minutes.

7.4 Consistency of Concrete: Except as specified otherwise, the slump shall be from 2 to 4 inches and will be determined by the methods specified hereinafter.

8. PLACING REINFORCEMENT AND MISCELLANEOUS MATERIALS:

8.1 General Requirements: All reinforcement bars, stirrups, hangar bars, wire fabric, spirals, and other reinforcing materials shall be provided as indicated on the drawings or required by this specification, together with all necessary wire ties, chairs, spacers, supports, and other devices necessary to install and secure the reinforcement properly. All reinforcement, when placed, shall be free from rust, scale, oil, grease, clay, and other coatings, and foreign substances that would reduce or destroy the bond. Rusting of reinforcement shall not be a basis of rejection, provided that the rusting has not reduced the effective cross sectional area of the reinforcement to the extent that the strength is reduced beyond specified values. Heavy, thick rust or loose, flaky rust shall be removed by rubbing with burlap or other approved method, prior to placing. Reinforcement which has bends not shown on the project drawings or on approved shop drawings or is reduced in section by rusting such that its weight is not within permissible ASTM Tolerances shall not be used. All reinforcement shall be supported and wired together to prevent displacement by construction loads or by the placing of concrete. Unless directed otherwise by the Contracting Officer, reinforcement shall not be bent after being partially embedded in hardened concrete. Detailing of reinforcing shall conform to ACI 315. Where cover over reinforcing steel is not specified it shall be in accordance with ACI 318.

8.2 Placing: Reinforcement shall be placed accurately and secured. It shall be supported by suitable chairs or spacers or by metal hangers. On the ground, and where otherwise subject to corrosion, concrete or other suitable non-corrodible material shall be used for supporting reinforcement. Where the concrete surface will be exposed to the weather in the finished structure or where rust would impair the appearance or finish of the structure, all reinforcement supports, within specified concrete cover, shall be galvanized or made of a suitable non-corrodible material. All metal devices necessary for spacing, placing, supporting, and fastening reinforcing shall conform to CRSI's "Manual of Standard Practice for Reinforced Construction".

8.2.1 Placing Welded Wire Fabric: Welded wire fabric used as structural reinforcement in slabs shall be supported and adequately secured as required for reinforcing steel. Temperature reinforcement shall be extended across supporting beams and walls and to within 4 inches of concrete edges. It shall be extended through contraction joints and construction joints, except expansion joints in slabs on ground. Where welded wire fabric is used as temperature reinforcement and adequate support or securement is not provided, the wire fabric shall be lifted during placing of the concrete to insure proper positioning in the slab.

8.3 Splicing of Reinforcement: Splicing of reinforcement shall be in accordance with ACI 318, except as indicated otherwise or modified herein. Where splices in addition to those indicated on the drawings are necessary, they shall be approved by the Contracting Officer prior to their use. Splices shall not be made in beams, girders and slabs at points of maximum stress.

Except as indicated, or specified otherwise herein, in lieu of lapping, butt splicing of reinforcement may be permitted provided the splicing material, equal or greater in cross-sectional area to the spliced steel, shall possess a minimum of 125 percent of the yield strength or 90 percent of the ultimate strength of the reinforcing steel, whichever is the greater. Butt splicing shall be used for bar sizes #11 and above. Splices to be welded shall conform to AWS D12.1; certification of weldability of the reinforcement by the manufacturer, shall be submitted. If the Contractor elects to use butt splicing of reinforcing, he shall submit complete details of the process to be used for approval. The Contractor shall demonstrate that the splice meets the requirements specified herein by performing at least three test splices which shall be submitted for tests to a testing laboratory that has been approved by the Contracting Officer for such testing. The costs of these tests shall be borne by the Contractor.

8.3.1 Splicing of Welded Wire Fabric: Welded wire fabric shall be lapped 2 full meshes and shall be securely wired at each side and end.

8.4 Moving Reinforcing Steel: All placement or movement of reinforcing steel after placement, to positions other than indicated or specified, shall be subject to the approval of the designer.

8.5 Setting Miscellaneous Material: Anchors and bolts, including but not limited to those for machine and equipment bases; frames or edgings, hangers and inserts, door bucks, pipe supports, pipe sleeves; pipes passing through walls, metal ties, conduits, flashing reglets, drains, and all other materials in connection with concrete construction; shall, where practicable, be placed and secured in position when the concrete is placed. Anchor bolts for machines shall be set to templates, shall be plumbed carefully and checked for location and elevation with an instrument, and shall be held in position rigidly to prevent displacement while concrete is being placed.

9. VAPOR BARRIER: Vapor barrier shall be provided beneath the entire concrete floor slab of the building over the special compacted fill that is specified under another section. The material shall be placed in the greatest widths and lengths practicable so as to eliminate joints wherever possible; where joints are necessary, the material shall be lapped not less than 6 inches for the side and end laps and sealed with waterproofed tape of type recommended by vapor barrier manufacturer. Torn, punctured, or damaged vapor barrier material shall be removed and replaced as directed, prior to the placing of concrete. Concrete shall be placed in a manner to preclude damage to the vapor barrier material.

10. CONVEYING AND PLACING CONCRETE:

10.1 Conveying: Concrete shall be conveyed from the mixer to the forms as rapidly as practicable by proper methods which will not cause segregation or loss of ingredients. It shall be desposited as nearly as practicable in its final position in the forms. At any point in the conveying, the free vertical drop of the concrete shall not exceed 3 feet. Chuting will be

permitted only where the concrete is deposited into a hopper before it is placed in the forms. Conveying equipment shall be cleaned thoroughly before each run. All concrete shall be deposited as soon as practicable after the forms and the reinforcement have been inspected and approved. Concrete which has segregated in conveying shall be removed and disposed of as directed by the Contractor Quality Control representative.

10.2 Placing: No concrete shall be placed after there is evidence of initial set. All concrete placing equipment and methods shall be subject to approval. Concrete placement will not be permitted when weather conditions prevent proper placement and consolidation. The placement of concrete in uncovered areas during periods of precipitation will not be allowed. Unless otherwise specified herein, placing concrete in water will not be allowed. Subgrades of earth or other material shall be properly prepared and, if necessary, covered with heavy building paper or other suitable material to prevent the concrete from becoming contaminated. Before placing concrete on porous subgrades, they shall be dampened as required to prevent water of hydration from being absorbed into the subgrade. Forms shall be clean of dirt, construction debris, water, snow, and ice. Fresh concrete shall not be placed on vertical supporting members such as columns and walls without approval. Concrete shall be deposited in approximately horizontal layers 12 to 20 inches deep in a manner to preclude the formation of cold joints between successive layers. The method of depositing concrete shall be such as to avoid displacing the reinforcement and segregating the aggregate. Concrete shall be worked about the reinforcement and embedded fixtures and into corners and angles of the forms, care being taken to avoid overworking which may result in segregation. On the bottom of beams, slabs, and girders where the congestion of steel near the forms makes placing difficult, a layer of mortar equal to the approved concrete mix, with the coarse aggregates removed and of 5 to 6 inch slump, shall be deposited to cover the surface to a depth of approximately one inch before placing the concrete. Water which accumulates on the surface of the concrete during placing shall be removed by absorption with porous materials in a manner that prevents removal of cement. Pumping of concrete through aluminum pipe shall not be permitted.

10.3 Vibration: All concrete shall be compacted with high frequency, internal, mechanical vibrating equipment supplemented by hand spading and tamping. Vibrators shall be designed to operate with vibratory element submerged in the concrete, and shall have a frequency of not less than 6,000 impulses per minute when submerged. The vibrating equipment shall be adequate at all times in number of units and power of each unit to consolidate the concrete properly. Vibration of forms and reinforcement shall not be employed except when authorized specifically by the Contracting Officer. Vibrators shall not be used to transport the concrete in the forms. Vibration shall be discontinued when the concrete has been compacted thoroughly and ceases to decrease in volume.

10.4 Control Joints: Commence saw cutting operation as soon as concrete has hardened sufficiently to prevent dislodging of aggregate and complete before shrinkage induces cracking. Saw cut the concrete to achieve a joint at

least 1/4 inch in width. This 1/4 inch width may be obtained by saw cutting a 1/8 inch wide joint as indicated on the Drawings and allowing the anticipated floor shrinkage to compensate for the balance. If this method is used and the 1/8 inch saw fails to widen to 1/4 inch, recut to a 1/4 inch width prior to filling. Commence placing joint sealing material, in accordance with manufacturer's directions, after all construction is nearing completion; but in no case, however, sooner than 60 days after saw cuts are made.

10.5 Construction Joints: Joints not shown on the drawings shall be made and located so as to least impair the strength of the structure and shall be subject to approval of the Contracting Officer. In general, they shall be located near the middle of the spans of slabs, beams and girders unless a beam intersects a girder at this point, in which case the joints in the girders shall be offset a distance equal to twice the width of the beam. Horizontal joints in walls and columns shall be at the underside of floors, slabs, beams, or girders and at the top of footings or grade slabs. Beams, girders, brackets, column capitals, haunches, and drop panels shall be placed at the same time as slabs. Joints shall be perpendicular to the main reinforcement. Arrange joints in walls and grade beams so that no more than 80 linear feet is placed monolithically. Arrange joints in elevated slabs so that no more than 5,000 square feet of slab is placed monolithically. In addition, arrange joints as close to a square configuration as practical; long or irregular shapes are not allowed. Where indicated or required, saw cut and fill joints with joint sealing materials as specified in paragraph entitled "Control Joints".

10.5.1 Reinforcement in Construction Joints: All reinforcing steel and welded wire fabric shall be continued across joints. Keys shall be provided as directed by the Contracting Officer. Longitudinal keys at least 1-1/2 inches deep shall be provided in all joints in walls and between walls and slabs or footings.

10.5.2 Preparation of Surface: The surface of the concrete at all joints shall be thoroughly cleaned and all laitance removed.

10.5.3 Bonding: When a bonded construction joint is required, bond shall be obtained by one of the following methods:

10.5.3.1 Compound: The use of a bonding compound for concrete, conforming to MIL-B-19235.

10.5.3.2 Chemical Retardant: The use of suitable chemical retardant which delays but does not prevent setting of the surface mortar. Retarded mortar shall be removed within 24 hours after placing to produce a clean exposed aggregate bonding surface.

10.5.3.3 Finish: By roughening the surface of the concrete in proper manner which will expose the aggregate uniformly and will not leave laitance, loosened particles of aggregate, or damaged concrete at the surface.

10.6 Expansion Joints, Cleavage Joints, Waterstops and Embedded Items:

10.6.1 Expansion Joints and Cleavage Joints: Expansion joints and cleavage joints shall be 1/2-inch wide except as indicated otherwise. Expansion joints not exposed to weather shall be filled completely with preformed joint material conforming to ASTM D1751 or ASTM D1752, except where otherwise indicated. Cleavage joints not exposed to the weather shall have building paper installed as indicated. Expansion joints exposed to weather and cleavage joints (exposed to the weather) between vertical masonry surfaces and floor slabs laid on earth shall be filled to a depth of 1-inch from the surface or face of the concrete with preformed joint material conforming to ASTM D1751 or ASTM D1752. The 1-inch deep space above the preformed material shall be cleaned after the concrete has been cured, and when dry, filled flush with joint sealing material. Reinforcement or other embedded metal items bonded to the concrete, except dowels in floors bonded on only one side of joint, shall not be permitted to extend continuously through any expansion joint. Premolded expansion joint filler shall conform to ASTM D1751 or D1752.

10.6.2 Waterstops: The location of waterstops in construction joints and expansion joints shall be as indicated. Each piece of premolded waterstop shall be of maximum practicable length in order that the number of end joints will be held to a minimum. Joints at intersections and at ends of pieces shall be made in the manner most appropriate to the material being used. Joints shall develop effective watertightness fully equal to that of the continuous waterstop material and shall permanently develop not less than 50 percent of the mechanical strength of the parent section and shall permanently retain its flexibility.

10.6.3 Other Embedded Items: All sleeves, inserts, anchors, and embedded items required for adjoining work or for its support shall be placed prior to concreting. All sub-contractors, whose work is related to the concrete or must be supported by it, shall be given ample notice opportunity to introduce or furnish embedded items before the concrete is placed. All ferrous metal sleeves, inserts, anchors, and other embedded ferrous items exposed to the weather or where rust would impair the appearance or finish of the structure shall be galvanized.

10.6.4 Placing Embedded Items: Expansion joint material, waterstops, and embedded items shall be positioned accurately and supported against displacement. Voids in sleeves, inserts, and anchor slots shall be filled temporarily with readily removable material to prevent the entry of concrete into the voids. Aluminum shall not be embedded in concrete except where aluminum is protected from direct contact with the concrete.

10.6.5 Reinforcing Bars: Bars may be moved as necessary to avoid interference with other reinforcing steel, conduits, or embedded items, but not so as to impair design strengths of the members. If bars are moved more than one bar diameter, the resulting arrangement of bars shall be subject to the approval of the Contracting Officer.

10.7 Placing Concrete in Cold Weather: Placing concrete in cold weather shall be in accordance with ACI 305 except as modified herein. Except when authorized specifically by the Contracting Officer, concrete shall not be placed when the atmospheric temperature is below 40 degrees Fahrenheit. When the concrete is likely to be subjected to freezing temperatures within 24 hours, concrete materials shall be heated, at no additional cost to the Government, so that the temperature of the concrete when deposited shall be between 65 and 80 degrees Fahrenheit. Methods of heating materials shall be subject to approval of the Contracting Officer. Water for mixing shall not be heated above 165 degrees Fahrenheit. Lumps of frozen material and ice shall be removed from the aggregates before placing them in the mixer. Concrete damaged by freezing shall be removed and replaced at no additional cost to the Government.

10.8 Placing Concrete in Hot Weather: Placing concrete in hot weather shall be in accordance with ACI 305 except as modified herein. In hot weather, extra care shall be taken to reduce the temperature of the concrete being placed, and to prevent rapid drying of newly placed concrete. When the outdoor ambient temperature is more than 90 degrees Fahrenheit, the temperature of the concrete as placed shall not exceed 90 degrees Fahrenheit; the fresh concrete shall be shaded as soon as possible after placing; and curing shall be started as soon as the surface of the fresh concrete is sufficiently hard to permit it without damage.

10.9 Pre-mixed Grout: Pack the entire space between the top of the concrete bearing surface and the bottom of the bearing device with grout until all voids are completely filled. After grout has hardened, remove wedges or shims and fill resulting holes.

11. SURFACE FINISHES (EXCEPT FLOOR FINISHES):

11.1 General Requirements: All formed surfaces shall be repaired by patching minor honeycombed or otherwise defective areas and tie holes with cement mortar. Cement mortar for patching shall be the same composition as that used in the concrete, except that for exposed surfaces part of the cement shall be white Portland cement to provide a finish color matching the surrounding concrete. Patching shall be done as soon as the forms are removed; areas of surfaces which are to be cured with a curing compound shall be covered during the application of the compound. All areas to be patched shall be cleaned thoroughly. Minor honeycombed or otherwise defective areas shall be cut out to solid concrete but to a depth of not less than 1-inch. The edges of the cut shall be perpendicular to the surface of the concrete. The area to be patched and at least 6 inches adjacent thereto shall be saturated with water before placing the mortar. The mortar shall be mixed approximately one hour before placing and shall be remixed occasionally during this period with a trowel without the addition of water. A grout of cement and water mixed to the consistency of paint shall then be brushed onto the surfaces to which the mortar is to be bonded. The mortar shall be compacted into place and screeded slightly higher than the surrounding surface. Patches

on exposed surfaces shall be finished to match the adjoining surfaces, after they have set for an hour or more. Patches shall be cured as specified for the concrete. Holes extending through the concrete shall be filled by means of a plunger type gun or other suitable device from the unexposed face. The excess mortar shall be wiped off the exposed face with a cloth. Finished surfaces shall be protected from stains and abrasions. Standard finish against steel, plywood and wood forms, and rubbed finish shall be equal in workmanship, texture, and general appearance to that of sample panels specified herein. Concrete with excessive honeycombing, which exposes the reinforcing steel or other defects which affect the structural strength of the member, will be rejected, or the defects corrected as directed by the Contracting Officer, and at the expense of the Contractor.

11.2 Sample Concrete Panels: Sample concrete panels shall be submitted as specified hereinafter.

11.3 Standard Finish: Standard finish shall be provided for all exposed concrete not indicated or specified otherwise. The surface of the concrete shall not vary more than 1/4-inch when measured from a five-foot template. Exposed surfaces shall be uniform in appearance.

11.3.1 Against Forms: All fins and other projections shall be removed carefully, and all abrupt irregularities shall be leveled. Surface pits having a dimension greater than 1/8-inch shall be filled with cement mortar as specified hereinbefore for patching.

11.3.2 Not Against Forms: Surfaces not specified otherwise shall be finished with wood floats to even surfaces.

11.4 Special Finishes: All fins and other projections shall be removed carefully and all abrupt irregularities shall be leveled. The surface of the concrete shall be smooth and uniform in appearance and shall not vary more than 1/4-inch when measured from a ten-foot template.

11.4.1 Rubbed Finish: Rubbed finish shall be provided for all concrete exposed to view. Where practicable, the forms shall be removed before the concrete has attained a hard set, proper consideration being given to the safety of the structure. Immediately after the forms have been removed, the surface shall be wetted thoroughly and rubbed with carborundum or other abrasive to a smooth even finish or uniform appearance. Upon completion of the rubbing, the surface shall be washed thoroughly with clean water.

12. FLOOR FINISHES:

12.1 General: The finishes included herein include surface finishes and treatments for floors and slabs. For floors in which drains occur, special care shall be exercised to slope the floors uniformly to the drains. Where ceramic and acid resisting quarry tile are installed in Portland cement mortar, brick pavers, slat flooring, etc. are to be laid, the concrete base slab shall be depressed as indicated to provide a finish floor at the same

elevation as surrounding areas. All floor slabs where finish is not indicated or specified shall receive a single steel troweling. Dry cement shall not be placed directly upon the new concrete surface to absorb excess moisture.

12.2 Sample Panels: Sample panels shall be submitted as specified hereinafter.

12.3 Placing and Screeding Normal Concrete Slab or Base Slab: Concrete of slump within the limits specified hereinbefore shall be placed, consolidated and immediately struck off to bring the top surface of the slab to proper contour, grade and elevation. This operation may be followed immediately by a darbying or bull floating of the surface with wooden tools so as to correct any uneveness. Striking-off and darbying shall be completed before bleed water appears on the surface of the freshly-placed concrete. No further work shall then be performed until the concrete has attained a set sufficient for floating and sufficient to support the weight of the finisher and equipment. If the bleed water has not disappeared by the time floating of the surface is to start, the excess water shall be first dragged off the surface using a rubber hose. At no time shall dry cement be used to absorb bleed water.

12.3.1 Floated Finish: Floated finish shall be provided where indicated. At the proper time, as specified hereinbefore for placing and screeding normal concrete slab or base slab, floating shall be performed by hand with a wood or magnesium float, or with a power-driven float of suitable type. Floating of any one area shall be the minimum necessary to produce the finish specified. Provide a wood float finish for epoxy topping.

12.3.2 Troweled Finish: Troweled finish shall be provided where indicated. The floor shall first be given a floated finish as specified hereinbefore. Upon attaining proper set, the surface shall be flat-steel-troweled followed by a raised steel troweling in order to obtain the desired finish. Burnished troweling shall be obtained by using raised steel troweling until practically no change in the sheen of the surface is effected by added troweling.

12.3.3 Broomed Finish: Broomed finish shall be provided where indicated. The floor shall first be given a floated finish and then a steel troweled finish, as specified hereinbefore, after which it shall be brushed or broomed as necessary. A flexible bristle broom or stiff brush shall be used. It shall have a frequency of fibers across its patch as necessary to produce the effect required to match the approved sample panel specified hereinafter. At time of brooming or brushing, the troweled surface shall have hardened sufficiently to retain the scoring or ridges. The brooming or brushing shall be in a direction transverse to that of traffic or at right angles to the slope of the slab or floor.

12.4 Curing: Finished floor surfaces shall be cured adequately as specified hereinafter.

12.4.1 Curing With Water: Moist or wet-curing with water or by complete covering with waterproof membrane sheets shall be continuous for 7 days at temperatures of 60 degrees F and above, and for longer periods at lower temperatures, as necessary. Floors receiving bonded finish materials shall be cured with water.

12.4.2 Liquid-and-Wax-Membrane-Forming and Chemical-Curing-Sealing Compounds: These compounds shall meet the water-retention and other requirements specified hereinbefore for liquid membrane-forming compounds or for liquid chemical compound curing, at an application rate recommended by the manufacturer, they shall be applied to the concrete surface immediately after final finishing and as soon as the floor surface will not be marred by their application. These compounds shall not be used on surfaces to be treated subsequently with chemical floor hardeners. Surfaces on which bonded finish materials is to be later applied shall be cured only with water or a compound which the manufacturer attests is compatible with cements, mortars, adhesives, etc. used for affixing bonded finish materials.

12.4.3 Chemical Floor Hardeners: Chemical floor hardeners shall be applied to all exposed concrete floors. They shall be applied to a dried concrete surface, only after the concrete has been first adequately moist or wet-cured, or to one that has been cured with non-staining vaporproof sheeting or paper. Treatment of new (and old) concrete surfaces shall be in accordance with the recommendations of the manufacturer, in the amount used and as to the number of applications.

12.5 Cleaning: Upon completion of the work, all concrete floors, except those having sealer-hardener finish, shall be cleaned as follows:

After sweeping with an ordinary broom to remove the loose-dirt, the finish shall be wetted with soapsuds and rubbed with a scrubbing machine fitted with a wire brush or fine steel wool. The suds shall be mopped up, and the surface shall be flushed with clean warm water, after which a final scrubbing by hand in lieu of machine scrubbing will be permitted when authorized specifically. Floors having sealer-hardener finish shall be cleaned of loose dirt and debris by sweeping with ordinary brooms or by other suitable method.

13. CURING AND PROTECTION (EXCEPT FLOORS):

13.1 General Requirements: Concrete shall be protected adequately from injurious action by sun, rain, flowing water, frost, and mechanical injury, and shall not be allowed to dry out from the time it is placed until the expiration of the minimum curing periods specified hereinafter. Curing shall be accomplished by impervious-sheeting curing or by application of liquid chemical or liquid membrane-forming compound, except as specified otherwise herein. Membrane-forming compound shall not be used on surfaces where its appearance would be objectionable, on formed surfaces for which special finish is specified, on any surface to be painted, waterproofed, tiled, roofed, or where coverings are to be bonded to the concrete, or on concrete to which other concrete is to be bonded. Completion of curing shall be initiated

immediately following the removal of forms. The temperature of the air next to the concrete shall be maintained at not less than 40 degrees Fahrenheit for the full curing periods. When concrete is authorized for placement in temperatures below 40 degrees Fahrenheit, the air in contact with the concrete shall be maintained at a temperature of not less than 50 degrees Fahrenheit for a period of 7 days after placing, or at not less than 70 degrees Fahrenheit for a period of 3 days after placing, and at not less than 40 degrees Fahrenheit for the remainder of the specified curing periods. Heating of the concrete in place shall be effected by vented heaters or steam coils under canvas covers or by other suitable means. The temperature within enclosures shall not exceed 100 degrees Fahrenheit, and adequate moisture shall be applied to the concrete surface during the heating period to prevent it from drying out. The rate of cooling after the protection period shall be approximately one degree Fahrenheit per hour for the first 24 hours and 2 degrees Fahrenheit per hour thereafter. Concrete shall be protected against freezing for the full curing period specified hereinafter.

13.2 Impervious-Sheeting Curing: The entire exposed surface shall be wetted thoroughly with a fine spray of water and then covered with (a) waterproofed paper, (b) polyethylene-bonded waterproof paper sheeting, (c) polyethylene-coated burlap sheeting, or (d) polyethylene sheeting. Sheets shall be laid directly on the concrete surface and overlapped 12 inches when a continuous sheet is not used. The curing medium shall be not less than 18 inches wider than the concrete surface to be cured, and shall be weighted down by placing a bank of moist earth on the edges just outside the forms and over the transverse laps to form closed joints. Sheets shall be satisfactorily repaired or replaced if torn or otherwise damaged during curing. The curing medium shall remain on the concrete surface to be cured for not less than 7 days.

13.3 Liquid Membrane-Forming Compound Curing: Liquid membrane-forming compound curing shall be accomplished by applying a white-pigmented liquid compound, free of paraffin or petroleum, over the concrete surface, to restrict evaporation of the mixing water. All joint openings except sawed joints shall be sealed at the top by inserting moistened paper or fiber rope, or covering with strips of waterproof material, prior to application of the curing compound, in a manner to prevent the curing compound from entering the joint. Seven days following the placing of the liquid membrane-forming compound shall be considered as the end of the curing period and the basis for determining when joint sealing material will be placed in joints.

13.3.1 Application of Curing Compound: The compound shall be applied immediately after the surface loses its water sheen and has a dull appearance and before joints are sawed. Curing compound shall be agitated thoroughly by mechanical means during use and shall be applied uniformly in a 2-coat continuous operation by suitable power-spraying equipment. The total coverage for the two coats shall be between 150 and 200 square feet per gallon of undiluted compound. The compound shall form a uniform, continuous, coherent film that will not check, crack, or peel and shall be free from pinholes or other imperfections. An additional coat of the compound shall be applied

immediately to areas where the film is defective. Suitable covering other than liquid curing compound, shall be kept readily available for use to protect the freshly placed concrete in the even conditions occur which prevent correct application of the compound at the proper time. Concrete surfaces that are subject to heavy rainfall within 3 hours after the curing compound has been applied shall be resprayed with two coats of curing compound by the method and at the foregoing coverage rate specified, at no additional cost to the Government.

13.3.2 Protection of Treated Surfaces: Concrete surfaces to which liquid membrane-forming compounds have been applied shall be kept free from all foot and vehicular traffic and all other sources of abrasion for not less than 72 hours. Continuity of the coating shall be maintained for the entire curing period and any damage to the coating during this period shall be repaired immediately.

13.3.3 Liquid Chemical Compound Curing: Liquid chemical compound curing may be provided in lieu of liquid membrane-forming compound curing, and shall be provided for surfaces for which a sealer-hardener finish is specified. The application of the compound shall conform to the requirements for liquid membrane-forming compound curing except as specified otherwise herein. Sealing or covering of joints and openings in which joint sealer is to be applied will not be required. The coverage and number of applications shall be in accordance with the recommendations of the manufacturer of the compound.

13.4 Steam Curing: Steam curing may be done at the Contractor's option. The methods and procedures for steam curing shall be approved by the Contracting Officer prior to beginning the work. Concrete shall be moist cured for not less than 4 hours prior to steam curing. When the ambient air temperature is below 50 degrees Fahrenheit, steam may be used to hold the air temperature between 50 degrees and 70 degrees Fahrenheit. Steam shall not be applied directly to the concrete or forms. During application of steam, the air temperature shall be increased at a rate not exceeding 40 degrees Fahrenheit per hour until a maximum temperature of 140 to 160 degrees Fahrenheit is reached. In no instance shall the temperature exceed 160 degrees Fahrenheit. The maximum temperature of 140 to 160 degrees Fahrenheit shall be held until the concrete has reached the required strength or for not less than 24 hours. In discontinuing the steam application, the air temperature shall be decreased at a rate not exceeding 40 degrees Fahrenheit per hour until a temperature has been reached 20 degrees Fahrenheit above the temperature of the air to which the concrete will be exposed. The concrete shall not be exposed to temperatures below freezing until at least 6 days after casting. All temperatures within the steam chamber shall be measured by means of recording type thermometers.

13.5 Curing Periods: When the 7-day compression-test cylinders, representative of parts of a structure already placed, indicate that the 28-day strengths may be less than 90 percent of the design strengths, those parts of the structure shall be given additional curing, as directed by the Contracting Officer. Curing, except steam curing, shall be as follows:

Time (Minimum)	Concrete Element
7 Days	All concrete not specified otherwise.
10 Days	Retaining walls that will be subjected to frost action or similar deteriorating conditions.
10 Days	Sidewalks not under cover.
14 days	Water tanks for fresh water.

13.6 Removal of Forms and Protection: Forms shall be removed in a manner which will prevent damage to the concrete. Forms shall not be removed without approval, or before the expiration of the minimum periods specified herein:

	Days After Placing
Side forms on beams, girders, columns, and walls (lifts, 15 feet and under)	1
Forms for columns and walls (lifts over 15 feet)	2
Supporting forms for beams, girders, and slabs	6

Sufficient shoring members to support dead load plus construction loads on beams, girders, and slabs shall be provided for a period of 8 days in addition to the 6 days specified herein. If curing temperatures are below 50 degrees Fahrenheit, the minimum time for removal of forms and shores shall be 50 percent greater than specified. The time for removal of forms for structures not included herein shall be as directed by the Contracting Officer. Concrete work shall be protected from damage during the construction.

14. MISCELLANEOUS CONSTRUCTION:

14.1 Pits and Trenches: Pits and trenches shall have the bottom slabs and walls keyed and bonded together properly. Where practicable the bottom slabs and walls shall be placed integrally. Slabs forming covers for pits and trenches shall have openings formed to suit the installation of equipment and apparatus.

14.2 Concrete Lintels and Sills: Concrete lintels and sills shall be either cast-in-place or precast concrete. All exposed surfaces shall be smooth and true, with sharp edges. If precast concrete is used, it shall be damp-cured for not less than 7 days and allowed to dry out before being moved. Steel reinforcement of two No. 5 bars or of zinc-coated welded wire fabric of equivalent cross-sectional area shall be provided in sills. If precast concrete is used, suitable provisions shall be made for anchoring the sections to the walls, and each section shall be set in a full bed of Portland cement mortar. Sills shall be provided with seats, washers, lugs, and drips where indicated and necessary to provide proper drainage.

14.3 Splash Blocks: Splash blocks shall be provided at outlets of downspouts emptying at grade and on roof; they shall be of precast concrete, 24-inches long, 12-inches wide, and 6-inches thick, with countersunk dishes finished smooth and sloped to drain away from the building. The earth shall be compacted to provide firm bases for the blocks. Install splash/blocks on roof before gravel is applied.

14.4 Concrete Sidewalks, Curbs, and Curb and Gutter:

14.4.1 Concrete Sidewalks: Sidewalks shall be not less than 3-5/8 inches in thickness or as indicated. Concrete sidewalks shall have contraction joints every 5 linear feet, cut to a depth of 3/4 inch with a jointing tool. Contraction joints shall be cut after the surface has been finished. Transverse expansion joints shall be installed at all returns, driveways, and opposite expansion joints in curbs. Where curbs are not adjacent, transverse expansion joints shall be installed at intervals of approximately 50 feet. Expansion joints shall be made with preformed joint materials. Sidewalks shall be screeded and wood float finished to produce a uniform gritty surface. Edges of the sidewalks and joints shall be edged with a tool having a radius not greater than 1/8 inch. Sidewalks adjacent to curbs shall have a slope of 1/4 inch per foot toward the curb. Sidewalks not adjacent to curbs shall have a transverse slope of 1/4 inch per foot. The surface of the concrete shall show no variation in cross section in excess of 1/4 inch in 5 feet.

14.4.2 Concrete Curbs and Curb and Gutter: Curb and curb and gutter shall be constructed as indicated. At the option of the Contractor, the curbs and curb and gutter may be precast or cast in place. If cast in place, contraction joints similar to those specified for concrete sidewalks shall be provided at intervals of 8 to 10 feet. If precast, the curbs and curb and gutter shall be precast in lengths of from 4 to 5 feet. The curbs and curbs and gutter shall be given a steel trowel finish.

15. SAMPLING AND TESTING:

15.1 Sampling:

15.1.1 Aggregates: Sampling of aggregates shall be in accordance with ASTM D75, as modified herein. Prior to delivery of aggregates, at least one initial sample taken at the source shall be furnished by the Contractor. Each sample shall be collected by taking three increment samples at random from the source material to make a composite sample of not less than 50 pounds. Three random samples shall then be taken from each 3000 tons of material, or a day's run, whichever is the least amount, during the course of the project. Three increments shall be taken at random to make a composite sample of not less than 50 pounds. The above sampling shall be repeated when the source of material is changed or when unacceptable deficiencies or variations from the specified grading of materials are found in testing.

15.1.1.1 Coarse Aggregate: A 50 pound or larger sample for analysis as specified hereinafter shall be taken for each 400 tons, or fraction thereof, of coarse aggregate. The samples shall be taken from the conveyor belt or as the material falls into the weigh hopper. The plant shall be brought up to full operation before samples are taken. The samples shall be taken so that a uniform cross-section, accurately representing the materials on the belt or in the bins, is obtained. Random checks of the sampling may be made by the Contracting Officer. Additional sampling may be required when analyses show deficiencies or unacceptable variances or deviations from the specified requirements.

15.1.1.2 Fine Aggregates: A 50 pound sample shall be taken as specified hereinbefore for sampling of coarse aggregate. The sample shall be taken for sieve analysis of fine aggregate and specific gravity tests at a frequency of not less than one sample for each 200 tons, or fraction thereof of fine aggregate. Additional samples may be required when analyses show deficiencies, unacceptable variances, or deviations. Samples of sand shall be taken when the sand is moist.

15.1.1.3 Sample Identification: Each sample shall be contained in a clean container which shall be securely fastened to prevent loss of material. It shall be tagged for identification. The tag shall contain the following information:

Contract No. _____

Sample No. _____ Quantity _____

Date of Sample _____

Sampler _____

Source _____

Intended Use _____

For Testing _____

15.1.2 Concrete: Samples of wet concrete shall be collected during each working day as often as required to perform all tests required herein. Test specimens shall be made in accordance with ASTM C31. Sampling fresh concrete shall be in accordance with ASTM C172. Concrete samples shall be of proper size to permit making the required test specimens.

15.1.3 Rubber and Plastic Items: Collect two samples from each delivered lot of rubber and plastic items.

15.1.4 Joint Sealer and Filler: Collect two samples from each delivered lot of joint sealers and fillers.

15.2 Testing:

15.2.1 Aggregate Testing: Gradation tests in accordance with ASTM C136 shall be made on each sample without delay. All other aggregate tests required by this specification shall be made on the initial source samples, and shall be repeated whenever there is a change of source. The tests shall include an analysis of each grade of material and an analysis of the combined material representing the aggregate part of the mix. The Contracting Officer may request or make additional tests at random at the expense of the Government.

15.2.2 Cement: Cement testing will be performed by the Government through the facilities of the U. S. Army Corps of Engineers' Cement and Pozzolan Procurement Testing Service.

15.2.3 Concrete Testing:

15.2.3.1 Testing Consistency: Testing consistency of concrete slump shall be determined in accordance with ASTM C143. Consistency may be determined in the field by means of the ball-penetration method in accordance with ASTM C360 after a correlation between slump and ball penetration is determined. Tests to verify the ratio will be made at least once each working day. Samples for slump determination will be taken from the concrete during placing in the forms; samples for ball penetration will be taken as specified in ASTM C360. Tests shall be made at the beginning of a concrete placement operation and at subsequent intervals to insure that the specification requirements are met. In addition tests shall be made each time test cylinders are made.

15.2.3.2 Compressive Tests: Unless otherwise specified, testing of specimens for compressive strength shall be in accordance with ASTM C39. Three test specimens shall be made for each set of tests. Tests will be made at 7 and 28 days from time of molding. One specimen shall be tested at 7 days, and the other two at 28 days. When a satisfactory relationship between 7 days and 28 day strengths has been established, the 7 day test results may be used as an indicator of the 28 day strength. Each strength test for 28 day strength shall be the average of the strengths of the two test specimens of a set. The strength level of the concrete will be considered satisfactory if

the averages of all sets of three consecutive strength test results equal or exceed the specified 28 day compressive strength, and no individual strength test falls below the required 28 day compressive strength by more than 500 pounds per square inch. Where strength level of concrete falls below the specified limits, the Government may order core samples taken, and tested, at the Contractor's expense. In such event, three core samples for each cylinder test indicating defective concrete shall be taken for further testing. Sampling, testing and evaluation of drilled cores shall be in accordance with ACI 318, Part 3, Chapter 4. Concrete which is determined to be defective based on the strength acceptance criteria therein shall be removed and replaced with acceptable concrete, at no additional cost to the Government. Frequency of compressive tests on concrete cylinders shall be as follows:

(a) Not less than 6 test cylinders for each 150 cubic yards, or fraction thereof, of each class of concrete placed, and

(b) Not less than 3 test cylinders for each day for each class of concrete placed that day

(c) Space testing so that no more than 3 of the test cylinders are taken from any one batch.

15.2.3.3 Air Content: Air-entrained concrete shall be tested for air content at the same frequency as specified for slump tests.

15.2.3.4 Yield Tests: Yield tests shall be made by the absolute volume method as outlined in PCA's "Concrete Paving Inspectors Manual". Tests shall be made whenever the yield of a concrete mix is challenged by the Contracting Officer, twice per day on concrete pavement or concrete base, and whenever materials or mix proportions are changed.

15.2.3.5 Temperature Tests: Temperature tests shall be made in hot or cold weather conditions, at frequent intervals, until satisfactory control is established, and whenever test cylinders are made.

15.2.3.6 Site Mix: Site mix shall be sampled and tested for slump, yield and strength as follows: After satisfactory control is established, perform one test for each 10 to 25 cubic yards concrete, depending on size of mixer, unless otherwise specified.

15.2.4 Contractor Furnished Mix Design: If test results of any concrete to be used in the project show that the concrete strength is below the specified limits and does not meet other requirements of this specification, the Contractor shall make all necessary adjustments, at his expense. Concrete which at the end of 60 days after placement does not meet the specified strength shall be removed or otherwise corrected at the Contractors's expense.

15.3 Samples of Concrete Surface Finishes (Except Floor Finishes): Not less than three sample concrete panels for each finish specified, 3 feet by 3 feet, 3 inches thick, and cast of the same concrete mix as used in exterior surface finishes, except floor finishes, shall be provided by the Contractor at locations as directed by the Contracting Officer. Each set of panels shall be representative of one of the finishes specified. After approval by the Contracting Officer, the panels so approved shall be representative of the workmanship and finishes required. Samples shall not be removed or destroyed until so directed by the Contracting Officer.

15.4 Samples of Concrete Floor Finishes: Not less than three sample concrete panels, 2 feet by 2 feet, 3-inches thick, representative of each finish specified, shall be provided by the Contractor at locations as directed by the Contracting Officer. Samples shall be labeled to indicate which bonded finish materials is to be applied to these surfaces. After approval by the Contracting Officer, the panels so approved shall be representative of the workmanship and finishes required. Samples shall not be removed or destroyed until so directed by the Contracting Officer.

---END---

SECTION 04200. BRICK AND CONCRETE MASONRY UNIT WORK

1. APPLICABLE PUBLICATIONS: The following publications of issues listed below, but referred to thereafter by basic designation only, form a part of this specification to the extent indicated by references thereto:

1.1 Federal Specifications:

QQ-C-576B & Am 1	Copper Flat Products with Slit, Slit and Edge-Rolled, Sheared, Sawed or Machined Edges (Plate, Bar, Sheet, and Strip).

1.2 American Society for Testing and Materials (ASTM) Publications:

A82-72	Cold-Drawn Steel Wire for Concrete Reinforcement.
A90-69(1973)	Weight of Coating on Zinc-Coated (Galvanized) Iron or Steel Articles.
A153-73	Zinc Coating (Hot-Dip) on Iron or Steel Hardware.
A167-74	Corrosion-Resisting Chromium-Nickle Steel Plate, Sheet, and Strip.
A185-73	Welded Steel Wire Fabric for Concrete Reinforcement.
A615-75	Deformed Billet Steel Bars for Concrete Reinforcement.
A616-75	Rail Steel Deformed Bars for Concrete Reinforcement.
C55-75	Concrete Building Brick.
C90-75	Hollow Load-Bearing Concrete Masonry Units.
C91-71	Masonry Cement.
C129-75	Hollow Non-Load Bearing Concrete Masonry Units.
C144-70(1975)	Aggregate for Masonry Mortar.
C145-75	Solid Load-Bearing Concrete Masonry Units.
C150-74	Portland Cement.
C171-69(1975)	Sheet Materials for Curing Concrete.
C207-74	Hydrated Lime for Masonry Purposes
C216-75a	Facing Brick (Solid Masonry Units Made from Clay or Shale).
C270-73	Mortar for Unit Masonry.
C476-71	Mortar and Grout for Reinforced Masonry.
D1751-73	Preformed Expansion Joint Fillers for Concrete Paving and Structural Construction (Non-Extruding and Resilient Bituminous Types).
D1752-67(1973)	Preformed Sponge Rubber and Cork Expansion Joint Fillers for Concrete Paving and Structural Construction.

2. QUALITY CONTROL:

2.1 General: Approvals, except those required for field installations, field applications and field tests, shall be obtained before delivery of materials or equipment to the project site.

2.2 Tests and Samples:

2.2.1 Efflorescence Tests: Efflorescence tests shall be made on brick and mortar materials which will be exposed to weathering. Tests shall be scheduled far enough in advance of starting masonry work to permit retesting, if necessary.

2.2.1.1 Brick: Ten unbroken specimens of each type of masonry unit shall be selected in 5 pairs, each pair of similar appearance. One unit of each pair shall be tested by placing it on end in a glass or glazed receptacle in which one inch depth of distilled water is maintained. After being indoors at normal temperatures for 7 days, the masonry unit shall be removed from the water and air dried for 24 hours. Each pair of units shall be removed from the water and if the difference due to efflorescence is noticeable on any of the five samples, when viewed at a distance of 10 feet, the units represented by the samples will be rejected.

2.2.1.2 Mortar: A 3 ounce mortar specimen shall be prepared of each proposed mix, using as little water as possible. While still in a plastic condition and prior to its initial set, each mortar specimen shall be placed in a glass or glazed receptacle, and four ounces of distilled water shall be mixed with the mortar and stirred thoroughly for 5 minutes. The receptacle shall be of such a size that when the mortar specimen and water are combined in solution, and a masonry unit is placed in it, the solution will have a depth of 1/2 to one inch. A masonry unit, which has been tested and found free of efflorescence, shall be placed on end in the solution and the water level maintained at 1/2 to one inch with distilled water. After being indoors at normal temperature for 7 days, the masonry unit shall be removed from the solution and air dried for 24 hours. The masonry unit shall be compared with an untreated unit, and if the difference due to efflorescence is noticeable, when viewed at a distance of 10 feet, the mortar components shall be tested in separate receptacles, each containing a masonry unit which has been tested and found free of efflorescence. Each mortar component shall be thoroughly mixed with 4 ounces of distilled water, using one ounce of each cementitious material and 3 ounces of each aggregate, and the water level shall be maintained at a depth of 1/2 to one inch with distilled water. After 7 days indoors at normal temperatures, the masonry units shall be removed from the solution and observed for efflorescence, as specified hereinbefore, and the component causing efflorescence will be rejected.

2.3 Sample Panels: Before masonry work is started, sample panels, approved by the Contracting Officer, approximately 6 feet long, 4 feet high, and of the proper thickness shall be provided, including sample panel for sloping brick sills. Sample panels for sloping brick sills shall be 6 feet by 4 feet. Panels shall show the workmanship, coursing, bond, thickness, tooling of joints, range of color, texture of the masonry, and the color of the mortar, all as specified or selected. Prepare panels in sufficient number until each type of sample panel is approved by the Contracting Officer. The finished work shall match the approved sample panel. Leave panels in place for duration of Work, and protect panels from damage. Remove panels when directed by the Contracting Officer.

3. SUBMITTALS:

3.1 Certificates: Submit certificates from the manufacturer attesting that the following products conform to all requirements of this specification and of reference documents:

Prepackaged Mortar Mix	Flashing
Brick	Ties
Concrete Masonry Units	Anchors
Reinforcement	Adhesive
Bond Breaker	Compressible Joint Filler

3.1.1 Sample Certificate: The certificate shall not contain statements that could be interpreted to imply that the product does not meet all requirements specified, such as "as good as"; "achieve the same end use and results as materials formulated in accordance with the referenced specifications"; "equal or exceed the service and performance of the specified material". The certificate should simply state that the product conforms to all requirements specified.

SAMPLE CERTIFICATE

The manufacturer hereby certifies that the following products being furnished for this project conform to all requirements of the project specifications and of the reference specifications listed:

MANUFACTURER AND PRODUCT	REFERENCE SPECIFICATION
Ultra Cement Company Miracle Mortar Mix	ASTM C270, Type S, air content not more than 12 percent.

SIGNATURE AND TITLE

3.2 Catalog Data: Submit complete descriptive literature for each type of each of the following items: Data which describe more than one type, size, model, or item shall be clearly marked to indicate which type, size, model, or item the Contractor intends to provide. Data shall be sufficient to show conformance to specified requirements and shall include installation drawings and instructions.

Prepackaged Mortar Mix	Flashing
Brick	Ties
Concrete Masonry Units	Anchors
Reinforcement	Adhesive
Bond Breaker	Compressible Joint Filler

3.3 Materials Tests and Test Reports: The testing requirements for materials incorporated in referenced documents will be waived provided the manufacturer submits certificates stating that previously manufactured materials have been tested by recognized laboratories, that such materials

meet the testing requirements specified and that the tested material is of the same type, quality, manufacture and make as that furnished for this project. Copies of the test reports shall not be submitted, except as specifically requested by the Contracting Officer.

3.4 Selection of Color and Texture of Facing Brick: Color, size and texture of facing brick shall match color, size and texture indicated and on display at the Office of the Contracting Officer.

3.5 Selection of Mortar Color: Where colored mortar is indicated, the mortar shaall match the color indicated and on display at the Office of the Contracting Officer.

4. DELIVERY AND STORAGE: Cement, lime and other cementitious materials shall be delivered to the site and stored in unbroken bags, barrels, or other approved containers, plainly marked and labeled with the manufacturers' names and brands. Mortar materials shall be stored in dry, weathertight sheds or enclosures, and shall be stored and handled in a manner which will prevent the inclusion of foreign materials and damage by water or dampness. Masonry units shall be handled with care to avoid chipping and breakage. Materials stored on newly constructed floors shall be stacked in such manner that the uniformly distributed loading does not exceed 50 psf. Masonry materials shall be protected from contact with earth and exposure to the weather, and shall be kept dry until used. Materials containing frost or ice shall not be used.

5. MATERIALS: The source of supply for materials which will affect the appearance of the finished work shall not be changed after the work has started.

5.1 Facing Brick: ASTM C216, Grade SW, Type FBS. Provide all special shapes and sizes indicated or required. Furnish brick without cores wherever flat faces will be exposed including brick at sloping sills. Exposed surface of brick at sloping sills shall have color, range, and texture to match brick face at adjacent walls. Color, range, texture, and size of brick shall be provided to match samples on display at the Office of the Contracting Officer.

5.2 Concrete Masonry Units: Of modular dimensions, and shall be either air, water, or steam cured. Type II units shall be stored at the site before use, a minimum of 28 days for air cured units; 10 days for steam or water cured units; and 3 days for units cured with steam at a pressure of 120 to 150 psi and at a temperature of 350 to 365 degrees F for at least 5 hours. Exposed surfaces of units shall be comparatively smooth and of uniform texture.

5.2.1 Hollow Load-Bearing Units: ASTM C90; grades N-I or N-II.

5.2.2 Hollow Non-Load-Bearing Units: Types I or II conforming to ASTM C129, shall be provided for interior non-load-bearing walls and partitions, except that load-bearing units may be provided in lieu of non-load-bearing units.

5.2.3 Concrete Building Brick: ASTM C55, Grades S-I or S-II except that brick exposed to weather shall be Grades N-I or N-II. Concrete brick shall match the concrete masonry units with which they are used as closely as practicable in color and surface characteristics.

5.2.4 Solid Load-Bearing Units: ASTM C145, Grades S-I or S-II, except that units exposed to weather shall be grades N-I or N-II. Solid units shall be provided for masonry bearing under structural framing members as indicated, or as required.

5.2.5 Special Shapes: Special shapes, such as closures, header units, and jamb units, shall be provided as necessary to complete the work, and shall conform to the applicable portions of the specifications for the units with which they are used.

5.3 Mortar for Brick and Concrete Masonry Unit Work: ASTM C270 except that the air content shall not exceed 12 percent when tested in accordance with ASTM C91. Mortar for foundation walls, basement walls, and mortar in contact with earth shall be Type M. Mortar for other work shall be Type S. Colored mortar shall be provided for all exterior and interior brick work, including mortar at sloping sills. All the materials required for the mortar, except aggregate and water, may be combined in a prepackaged mortar mix. Containers of prepackaged mortar mix shall be provided with printed instructions on proportions of water and aggregate to be used and mixing requirements necessary to obtain the type mortar required.

5.4 Portland Cement: Type I, conforming to ASTM C150.

5.5 Hydrated Lime: Type S, conforming to ASTM C207.

5.6 Sand: Sand shall conform to ASTM C144.

5.7 Water: Water for mixing shall be potable.

5.8 Horizontal Joint Reinforcement: Fabricated from cold drawn steel wire, conforming to ASTM A82. The wire shall be zinc-coated after fabrication by the hot-dip process in accordance with ASTM A153. Reinforcement shall consist of two or more parallel longitudinal wires for single wythe walls and two parallel longitudinal wires with flush welded 4 inch wide box ties spaced 15 inches on centers for cavity walls. Longitudinal wires shall be not less than 0.1875 inch in diameter, weld connected with cross wires and box ties not less than 0.1483 inch in diameter. Cross wires shall be crimped to provide an effective moisture drip in wall cavity. The out-to-out spacing of the longitudinal wires shall be 1-1/2 to 1-3/4 inches less than the actual width of the masonry. The distance between welded contacts of cross wires with each longitudinal wire shall not exceed 16 inches. Joint reinforcement shall be provided in flat sections, not less than 10 feet in length, except that corner reinforcements and other special shapes may be less in length.

5.9 Anchors and Ties: Of approved designs, and shall be of copper-clad steel, zinc-coated steel, or non-corrosive metal having the equivalent total strength of steel types. Zinc-coated items shall be coated by the hot-dip process after fabrication. Zinc-coated items shall have a minimum of 1.25 ounces of zinc per square foot of surface when tested in accordance with ASTM A90.

5.9.1 Wire Mesh Ties: Wire mesh ties shall consist of wire, not less than 0.0625 inch in diameter, in 1/2 inch mesh, and of suitable width and length.

5.9.2 Corrugated Metal Ties: Not less than 7/8 inch wide by approximately 7 inches long, and not lighter than 18 gage, except where otherwise indicated.

5.9.3 Rigid Steel Anchors: Not less than one inch wide, 1/4 inch thick, and 24 inches long between bent ends. Each end shall be bent down not less than 3 inches into the mortar-filled cells.

5.9.4 "Z" Shaped Ties: 1/4 inch diameter wire, "Z" shaped length as required, with 2 inch bends, with and without moisture drip as indicated.

5.9.5 Anchors Used with Embedded Slots or Inserts: Dovetail type, of sheet steel, not lighter than 16 gage unless otherwise indicated, and one inch wide, and shall be crimped, corrugated, or bent at the end to provide adequate anchorage, and triangular shaped wire ties, with wire having a diameter of 3/16 inch. Anchors for wire inserts shall be of 9 gage wire, looped and closed. Anchors shall be of the proper length for the use intended. Dovetail slots and inserts are specified under another section.

5.10 Fastening: Suitable bolts, metal wall plugs, or other approved metal fastenings shall be provided for securing furring to masonry, and elsewhere as necessary.

5.11 Reinforcing Steel Rods: ASTM A615 or A616, Grade 60.

5.12 Through-Wall Flashing: One of the following types as specified hereinafter except that flashing indicated to terminate in reglets shall be metal or coated-metal flashing.

5.12.1 Coated Copper Flashing: 5 ounce electrolytic copper sheet, uniformly coated with an acid-proof, alkaliproof, elastic bituminous compound. Coating shall be factory applied to a weight of not less than 6 ounces per square foot on each side of sheet.

5.12.2 Six-ounce Copper or Corrosion Resistant Steel Flashing: Flashing shall be provided with factory fabricated deformations that mechanically bond flashing against horizontal movement in all directions. Such deformations shall consist of dimples, diagonal corrugations, or a combination of dimples and transverse corrugations. Copper flashing shall be six-ounce weight

conforming to QQ-C-576. Corrosion resistant steel shall be 0.006 inch thick conforming to ASTM A167, sheet or strip, type 301, 302, 304, or 316, with a No. 2D or No. 2 finish sheet and strip respectively.

5.12.3 Mastic: Type recommended by through-wall flashing manufacturer.

5.13 Thin-set Adhesive: Three component adhesive, amine cured epoxy type having the following physical properties:

(a) Mortar Density: 105 lbs./cu. ft.
(b) Compressive Strenth: 10,000 psi
(c) Tensile Strength: 2,500 psi
(d) Flexural Strength: 4,500 psi
(e) Coefficient of Expansion: 35×10^{6} in/in/degrees F.
(f) Adhesion:
    (1) To Brick: Greater than strength of brick.
    (2) To Setting Bed: Greater than strength of setting bed.
(g) Maximum Service Temperature:
    (1) Continuous: 160 degrees F.
    (2) Intermittent: 220 degrees F.
(h) Water Absorption: 0.2%

5.14 Joint Filler: Preformed (premolded) type conforming to ASTM D1751 or ASTM D1752.

5.15 Welded Wire Fabric: ASTM A185.

5.16 Bond Breaker: Type recommended by brick manufacturer.

5.17 Building Paper: Nonstaining waterproof paper conforming to ASTM C171.

5.18 Hardware Cloth: 4 mesh, No. 16, .062 inch diameter galvanized wire.

5.19 Compressible Joint Filler: Soft neoprene with a five to ten durometer.

6. INSTALLATION:

6.1 Environmental Conditions: Masonry shall not be laid when the air temperature is below 40 degrees F on a falling thermometer, or when it appears probable that temperatures below 40 degrees F will be encountered before the mortar has set, unless adequate means are provided for protecting the work from freezing. Protection shall consist of heating and maintaining the temperature of the masonry materials at not less than 40 degrees F, but not more than 160 degrees F and maintaining an air temperature above 40 degrees F on both sides of the masonry for not less than 72 hours. Work will not be permitted with or on frozen materials. Masonry work may be started at 34 degrees F on a rising thermometer.

5.9 Anchors and Ties: Of approved designs, and shall be of copper-clad steel, zinc-coated steel, or non-corrosive metal having the equivalent total strength of steel types. Zinc-coated items shall be coated by the hot-dip process after fabrication. Zinc-coated items shall have a minimum of 1.25 ounces of zinc per square foot of surface when tested in accordance with ASTM A90.

5.9.1 Wire Mesh Ties: Wire mesh ties shall consist of wire, not less than 0.0625 inch in diameter, in 1/2 inch mesh, and of suitable width and length.

5.9.2 Corrugated Metal Ties: Not less than 7/8 inch wide by approximately 7 inches long, and not lighter than 18 gage, except where otherwise indicated.

5.9.3 Rigid Steel Anchors: Not less than one inch wide, 1/4 inch thick, and 24 inches long between bent ends. Each end shall be bent down not less than 3 inches into the mortar-filled cells.

5.9.4 "Z" Shaped Ties: 1/4 inch diameter wire, "Z" shaped length as required, with 2 inch bends, with and without moisture drip as indicated.

5.9.5 Anchors Used with Embedded Slots or Inserts: Dovetail type, of sheet steel, not lighter than 16 gage unless otherwise indicated, and one inch wide, and shall be crimped, corrugated, or bent at the end to provide adequate anchorage, and triangular shaped wire ties, with wire having a diameter of 3/16 inch. Anchors for wire inserts shall be of 9 gage wire, looped and closed. Anchors shall be of the proper length for the use intended. Dovetail slots and inserts are specified under another section.

5.10 Fastening: Suitable bolts, metal wall plugs, or other approved metal fastenings shall be provided for securing furring to masonry, and elsewhere as necessary.

5.11 Reinforcing Steel Rods: ASTM A615 or A616, Grade 60.

5.12 Through-Wall Flashing: One of the following types as specified hereinafter except that flashing indicated to terminate in reglets shall be metal or coated-metal flashing.

5.12.1 Coated Copper Flashing: 5 ounce electrolytic copper sheet, uniformly coated with an acid-proof, alkaliproof, elastic bituminous compound. Coating shall be factory applied to a weight of not less than 6 ounces per square foot on each side of sheet.

5.12.2 Six-ounce Copper or Corrosion Resistant Steel Flashing: Flashing shall be provided with factory fabricated deformations that mechanically bond flashing against horizontal movement in all directions. Such deformations shall consist of dimples, diagonal corrugations, or a combination of dimples and transverse corrugations. Copper flashing shall be six-ounce weight

conforming to QQ-C-576. Corrosion resistant steel shall be 0.006 inch thick conforming to ASTM A167, sheet or strip, type 301, 302, 304, or 316, with a No. 2D or No. 2 finish sheet and strip respectively.

5.12.3 Mastic: Type recommended by through-wall flashing manufacturer.

5.13 Thin-set Adhesive: Three component adhesive, amine cured epoxy type having the following physical properties:

(a) Mortar Density: 105 lbs./cu. ft.
(b) Compressive Strenth: 10,000 psi
(c) Tensile Strength: 2,500 psi
(d) Flexural Strength: 4,500 psi
(e) Coefficient of Expansion: 35 x 10^6 in/in/degrees F.
(f) Adhesion:
    (1) To Brick: Greater than strength of brick.
    (2) To Setting Bed: Greater than strength of setting bed.
(g) Maximum Service Temperature:
    (1) Continuous: 160 degrees F.
    (2) Intermittent: 220 degrees F.
(h) Water Absorption: 0.2%

5.14 Joint Filler: Preformed (premolded) type conforming to ASTM D1751 or ASTM D1752.

5.15 Welded Wire Fabric: ASTM A185.

5.16 Bond Breaker: Type recommended by brick manufacturer.

5.17 Building Paper: Nonstaining waterproof paper conforming to ASTM C171.

5.18 Hardware Cloth: 4 mesh, No. 16, .062 inch diameter galvanized wire.

5.19 Compressible Joint Filler: Soft neoprene with a five to ten durometer.

6. INSTALLATION:

6.1 Environmental Conditions: Masonry shall not be laid when the air temperature is below 40 degrees F on a falling thermometer, or when it appears probable that temperatures below 40 degrees F will be encountered before the mortar has set, unless adequate means are provided for protecting the work from freezing. Protection shall consist of heating and maintaining the temperature of the masonry materials at not less than 40 degrees F, but not more than 160 degrees F and maintaining an air temperature above 40 degrees F on both sides of the masonry for not less than 72 hours. Work will not be permitted with or on frozen materials. Masonry work may be started at 34 degrees F on a rising thermometer.

6.2 Workmanship: Masonry wall shall be carried up level and plumb all around. One section of the walls shall not be carried up in advance of the others. Unfinished work shall be stepped back for joining with new work; toothing will not be permitted unless specifically approved by the Contracting Officer. Establish radii at curved walls to dimension indicated. Maintain such radii throughout entire height of wall. Heights of masonry shall be checked with an instrument at each floor, and at sills and heads of openings, to maintain the level of the walls. Door and window frames, louvered openings, anchors, pipes, ducts, and conduits shall be built in carefully and neatly as the masonry work progresses. Spaces around metal door frames shall be filled solidly with mortar, except where otherwise indicated. Masonry units shall be handled with care to avoid chipping, cracking, and spalling of faces and edges. Drilling, cutting, fitting, and patching, to accommodate the work of others, shall be performed by masonry mechanics. Masonry shall be cut with masonry saws in exposed work. Structural steelwork, bolts, anchors, inserts, plugs, ties, lintels, and miscellaneous metalwork specified elsewhere shall be placed in position as the work progresses. Fill joints of expansion gaps at ends of all lintels and similar items embedded in masonry with closed cell polyethylene rope; do not fill these joints with mortar. Chases of approved dimensions for pipes and other purposes shall be provided where indicated or necessary. Tops of exposed walls and partitions, not being worked on, shall be covered with a waterproof membrane, well secured in place. Unless indicated otherwise, partitions shall extend from the floor to the bottom of the floor or roof construction above. Walls and partitions shall be structurally bonded or anchored to each other and to concrete walls, beams, and columns. Non-load-bearing partitions and interior walls shall be securely anchored to the construction above, as indicated or in a manner that provides lateral stability while permitting unrestricted deflection of construction above. Scaffolding shall be inspected regularly, and shall be amply strong, well braced, and securely tied in position. Overloading of scaffolding will not be permitted.

6.3 Mortar Mixing: Mortar materials shall be measured in proper containers that will insure that the specified proportions of materials will be controlled and accurately maintained during the progress of the work. Measuring materials with shovels will not be permitted. Unless specified otherwise, mortar shall be mixed in proportions by volume. The aggregate shall be introduced and mixed in such a manner that the materials will be distributed uniformly throughout the mass. A sufficient amount of water shall be added gradually and the mass further mixed, not less than 3 minutes, until a mortar of the plasticity necessary for the purposes intended is obtained. The mortar shall be machine-mixed in suitable mixers, of the type in which the quantity of water can be controlled accurately and uniformly. Mortar boxes, pans, and mixer drums shall be kept clean and free of debris of dried mortar. The mortar shall be used before the initial setting of the cement has taken place; retempering of mortar in which cement has started to set will not be permitted. Antifreeze compounds, salts, or any other substance used to lower the freezing point of mortar will not be permitted.

6.3.1 Mortar for Brick and Concrete Masonry Unit Work: Mortar shall be mixed at the site using materials conforming to ASTM C270 necessary to obtain type mortar required. Measurement and mixing shall conform to ASTM C270. Where colored mortars are required, pigments shall be part of prepackaged mortar mix. When prepackaged mortar mixes are used, the mixing shall conform to the printed instructions of the prepackaged mortar mix manufacturer.

6.3.2 Grout: ASTM C476. Fine grout shall be provided in grout spaces less than 2 inches in any horizontal dimension or in which clearance between reinforcing and masonry is less than 3/4 inch. Coarse grout shall be provided in grout spaces 2 inches or greater in all horizontal dimensions and clearance between reinforcing and masonry is not less than 3/4 inch.

6.4 Mortar Joints: Mortar joints shall be uniform in thickness, and the average thickness of any three consecutive joints shall be 3/8 to 1/2 inch, unless otherwise specified. "Story poles" or "gage rods" shall be made by the Contractor prior to starting the work, or Contractor has option of using manufactured "story poles" or "gage rods". They shall be used prior to starting the work, and shall be used throughout the work. Changes in coursing or bonding after the work is started will not be permitted. Exposed joints shall be tooled slightly concave with a round or other suitable jointer when the mortar is thumbprint hard, except as otherwise specified. The jointer shall be slightly larger than the width of the joint, so that complete contact is made along the edges of the units, compressing and sealing the surface of the joint. Joints in masonry that will not be exposed shall be struck flush. Joints at interior brick walls shall be raked to a depth of 3/8-inch. Horizontal joints shall be tooled first. Joints shall be brushed to remove all loose and excess mortar. All horizontal joints shall be level; vertical joints shall be plumb and in alignment from top to bottom of wall within a tolerance of plus or minus 1/2 inch.

6.5 Brickwork: Overburned, or underburned, warped, spalled, cracked, or broken brick shall not be used where exposed, but may be used as back-up and where concealed. Brick, where exposed, shall be selected when placing for the better face for stretchers, and the better end for headers. Clay or shale brick shall be tested daily on the job, prior to laying, to determine if they will require wetting. A circle the size of a silver quarter shall be drawn on five random selected bricks with a wax pencil. Twenty drops of water shall be applied with a medicine dropper to the surface within the circle on each brick. If the average time that the water is completely absorbed in the five bricks is less than 1-1/2 minutes, the bricks represented by the five bricks shall be wetted. During freezing weather, units requiring wetting shall be sprinkled with warm water. The method of wetting shall be such as to insure that each unit is nearly saturated, but surface dry when laid. Unless indicated or specified otherwise, brickwork shall be laid in running bond. All joints between bricks shall be filled completely with mortar. Bed joints shall be formed of a thick layer of mortar, which shall be smoothed and not furrowed with a trowel point which produces voids in the finished mortar. Head joints shall be formed by applying to the brick to be laid, a full coat of mortar on the entire end, or on the entire side, as the case requires, and

then shoving the mortar-covered end or side of the brick tightly against the brick laid previously; the practice of buttering at the corners of brick and then throwing mortar or scrappings into the empty joints will not be permitted. Closure brick shall be laid with a bed joint and with head joints, and the brick shall be placed carefully without disturbing the brick previously laid. Dry or butt joints will not be permitted. Grouting shall be provided as specified. All brick which is moved after laying shall be removed and relaid with fresh mortar.

6.5.1 Brick-Faced Walls: Brick-faced walls shall consist of backing of concrete, concrete masonry units, and steel stud walls, faced with brick. The facing and backing shall be anchored with metal ties at the rate of one tie to not more than 4-1/2 square feet of wall surface, staggered in alternate courses, and spaced vertically not over 18 inches, and horizontally not over 36 inches, unless otherwise indicated. Additional bonding ties spaced not more than three feet apart around the perimeter and within 12 inches of the opening shall be provided at all openings. Where indicated, tie brick-faced walls to steel stud walls with corrugated metal ties. Anchor corrugated metal ties to steel studs with self-tapping, low profile sheet metal screws. Weep holes constructed of open masonry head joints, spaced as indicated, shall be provided at base of wall, over flashings and other locations as indicated. Fill weep holes with square strips of fiberglas insulation and spread out fiberglas insulation strips inside cavity.

6.5.2 Brick Rowlock Sills: Brick rowlock sills shall be laid on edge, sloped, and projected not less than 1/2 inch beyond the face of the wall to form a wash and drip; all joints shall be filled solidly with mortar and tooled. Exposed cores of brick units not allowed.

6.5.3 Cavity Walls: Cavity walls shall be constructed of a backing of concrete masonry separated from a brick exterior wythe by a continuous air space with or without insulation as indicated. The two wythes shall be securely tied together with horizontal joint reinforcement placed as specified hereinafter. Mortar beds shall be beveled away from cavity so that no mortar fins project into cavity when bricks are shoved in placed. The space between the wythes shall be kept clear and clean of mortar droppings by use of wood or foam insulation strips slightly narrower than cavity; strips shall be laid on horizontal reinforcing and lifted out and cleaned periodically. Weep holes constructed of open masonry head joints, spaced as indicated, shall be provided at base of wall cavity, where cavity is closed over with masonry or flashing, and other locations as indicated. Fill weep holes with square strips of fiberglas insulation and spread out fiberglas insulation strips in cavity. Outside face of concrete masonry unit backing in cavity walls without insulation shall be dampproofed as specified in section entitled, "Bituminous Dampproofing."

6.5.4 Reinforced Brick Masonry Walls: Reinforced brick masonry walls shall be constructed of two wythes of brick separated by a continuous space which shall be filled with grout or concrete and reinforced as indicated. Mortar beds shall be beveled away from grout space so that no fins project

into grout space when bricks are shoved in place. Furrowed bed joints will not be permitted. Exterior wythe of brick shall be laid to the height of each grout pour in advance of interior wythe; grout space shall be cleaned and reinforcing shall be set before interior wythe is laid. Metal ties shall be used as approved, to prevent spreading of the wythes and to maintain vertical alignment of walls. Reinforcing shall be positioned as indicated. Vertical reinforcing shall be wired securely in position as the brickwork progresses. Horizontal reinforcing shall be embedded in grout as the grouting proceeds. The minimum clear distance between parallel bars shall be the nominal diameter of the bars; the minimum clear distance between masonry and reinforcing shall be 1/4 inch. Unless indicated or specified otherwise, splices shall be formed by lapping bars not less than 40 bar diameters wire tying them together. Splices in adjacent horizontal bars shall be staggered.

6.5.5 Sloping Brick Sill: Precoat face of brick with bond breaker material before installation. Apply bond breaker material in accordance with manufacturer's recommendations. Completely remove bond breaker material from brick surfaces which are in contact with adhesive and mortar. The setting bed shall be a cement-lime type mortar bed conforming to Type M per ASTM C270. Setting bed mix shall consist of 1 part Portland cement mortar, 1/4 part hydrated lime, sand in an amount of not less than 2-1/4 nor more than 3 times the sum of volume of cement and lime used, and a minimum amount of water to produce a stiff mix. Install setting bed, welded wire fabric and provide a wood float finish to lines and grades indicated. Moist cure with a fog spray of water for 10 days. Prior to installation of adhesive, setting bed shall be dry and free from laitance, curing compounds, oil, grease, dirt, debris, and all other foreign matter. Mix adhesive in strict accordance with manufacturer's directions. Place adhesive on setting bed and spread to a nominal 1/8 inch depth with a plain trowel. Lay brick in running bond with 3/8 inch wide joints. Joint width shall be controlled by the use of approved spacers. After adhesive has set, remove spacers and install mortar of type specified for brick walls. Expansion and control joint materials are specified in section entitled "Calking".

6.6 Concrete Masonry Unit Work: The first course of concrete masonry units shall be laid in a full bed of mortar for the full width of the unit, the succeeding courses shall be laid with broken joints (running bond). The bed-joints of concrete masonry unit shall be formed by applying the mortar to the entire top surfaces of the inner and outer face shells, and the head joints shall be formed by applying the mortar for a width of about one inch to the ends of the adjoining units laid previously. The mortar for joints shall be smooth, not furrowed, and shall be of such thickness that it will be forced out of the joints as the units are being placed in position. Where anchors, bolts, and ties occur within the cells of the units, such cells shall be filled with mortar or grout as the work progresses, unless otherwise indicated. Concrete brick shall be used only at concealed locations for bonding walls, working out the coursing, topping out walls under sloping slabs distributing concentrated loads, backing brick headers, and elsewhere as required. Concrete masonry units shall not be dampened before or during laying.

6.6.1 Reinforced Concrete Masonry Unit Walls: Reinforced concrete masonry unit walls shall be laid in such a manner as to preserve the unobstructed vertical continuity of cores to be filled. Cross webs adjacent to vertical cores that are to be filled with grout shall be fully embedded in mortar, to prevent leakage of grout. Mortar fins protruding from joints shall be removed before grout is placed; the minimum clear dimensions of vertical cores shall be 2 inches by 3 inches. Reinforcing shall be positioned accurately as indicated. As masonry work progresses, vertical reinforcing shall be rigidly secured in place at vertical intervals not to exceed 160 bar diameters. Horizontal reinforcing shall be embedded in grout as grouting proceeds. The minimum clear distance between masonry and vertical reinforcement shall be not less than 1/2 inch. Unless indicated or specified otherwise, splices shall be formed by lapping bars not less than 40 bar diameters and wire tying them together.

6.6.2 Sand Filled Concrete Masonry Unit Walls: Concrete masonry walls, where indicated to have voids filled with sand, shall be laid in such a manner as to preserve the unobstructed vertical continuity of the cores. Completely fill cells with sand. Sand shall be installed alternately with the masonry with not more than a 2-foot height section of wall completed before sand is poured into the cells of the masonry units. Pack sand after each pour.

6.7 Bonding and Anchoring: Bonding and anchoring masonry walls and partitions shall be securely anchored or bonded at points where they intersect and where they abut or adjoin the concrete frame of a building. All anchors shall be completely embedded in mortar.

6.7.1 Corners and Intersections of Load-Bearing Masonry Walls: Corners and intersections of load-bearing masonry walls shall be bonded in each course with a true masonry bond, except where indicated or specified otherwise.

6.7.2 Intersecting Bearing Walls: Intersecting bearing walls which are erected separately shall be anchored with rigid steel anchors spaced not more than 2 feet apart vertically.

6.7.3 Intersections of Non-Load-Bearing Partitions with other Walls or Partitions: Intersections of non-load-bearing partitions with other walls or partitions shall be tied with corrugated metal anchors at vertical intervals of not more than 2 feet, or with masonry bonding in alternate courses.

6.7.4 Masonry Walls Facing or Abutting Concrete Members: Masonry walls facing or abutting concrete members shall be anchored to the concrete with dovetail or wire type anchors inserted in slots or inserts built into the concrete. Anchors shall be spaced not more than 18 inches on centers vertically and not more than 24 inches on centers horizontally, unless otherwise indicated. Install hardware cloth where indicated; space anchors for hardware cloth 6-inches on centers.

6.8 Through-Wall Flashing: Through-wall flashing, of the type specified hereinbefore, shall be provided as indicated. Unless indicated otherwise,

flashing shall extend from a point 1/2 inch from exterior face of walls, upward across wall cavity not less than 6 inches and into mortar of bed joint for backing wythe. Flashing shall be terminated 3/4 inch back from interior face of walls and turned back on itself not less than 1/2 inch. Where flashing does not run continuous, turn up end to prevent water from running down cavity. Flashing shall be firmly secured in reglets in a manner that provides a permanent watertight joint and as indicated. Flashing shall be provided in lengths as long as practicable. Ends shall be lapped not less than 1-1/2 inches for interlocking type ends, and 4 inches for overlapping types and overlapping ends shall be filled with mastic to provide watertight construction.

6.9 Horizontal Joint Reinforcement: Reinforcement shall be provided where indicated and in every other course and in the other two courses above and below openings of concrete masonry units in brick-faced walls, cavity walls, and in concrete masonry unit walls and partitions. Welded wire tie reinforcement shall be provided in every course of concrete masonry unit walls of elevator shafts. Reinforcement shall be continuous, except that it shall terminate on each side of control joints. Reinforcement above and below openings shall extend not less than 24 inches beyond each side of openings. Reinforcement shall be provided in the longest available lengths, utilizing the minimum number of splices. Splices shall overlap not less than 12 inches. Welded "L"-shape assemblies, not less than 40 by 48 inches, and "T"-shaped assemblies, not less than 32 by 32 inches, both of the same size members and the same construction as the straight reinforcement, shall be provided at corners and intersections of walls and partitions. Reinforcement shall be embedded in the mortar joints in such manner that all parts will be protected by and fully embedded in mortar.

6.10 Concrete Masonry Unit Lintels and Bond Beams: Concrete masonry unit lintels and bond beams shall be formed of units having the cells filled solidly with grout or concrete, and provided with not less than two No. 5 reinforcing bars, unless indicated otherwise. Reinforcing shall overlap a minimum of 24 bar diameters at splices; bond beams and reinforcing shall be broken at expansion joints and control joints. Concrete masonry units used for lintels and bond beams shall be of special shapes, and exposed work shall be of the same material and texture as the adjoining masonry units. Lintels shall be built on the ground and allowed to set at least 6 days before being moved, and they shall be straight and true and shall have at least 8 inches of bearing at each end.

6.11 Control Joints: Control joints shall be provided where indicated in concrete masonry unit walls; they shall be of the type indicated. Joints shall occur directly opposite each other on both faces of the wall, and unless otherwise indicated calked type joints shall be filled with joint filler, back-up material and a calking or sealant compound as specified in Section entitled "Calking". Where indicated, rake mortar joint clean to depth indicated to permit joints to be filled with calking or sealant compound as specified in Section entitled "Calking".

6.12 Grout Placement: Grouting shall be performed from the interior side of walls, except as approved otherwise. Sills, ledges, offsets and other surfaces to be left exposed shall be protected from grout droppings; grout falling on such surfaces shall be removed immediately. Grout shall be well stirred before placing to avoid segregation of the aggregate and shall be sufficiently fluid to flow into joints and around reinforcing without leaving voids. Grout shall be placed, by pumping or pouring from buckets equipped with spouts, in lifts not exceeding 4 feet; pours shall be kept at 1-1/2 inches below the top of masonry units in top course, except at the finish course. Grout shall be puddled or agitated thoroughly to eliminate voids without displacing masonry from its original position; masonry displaced by grouting operation shall be removed and laid in realignment with fresh mortar. Grout shall be re-agitated 1 to 1-1/2 hours after placement.

6.13 Forms and Shoring: Forms and shoring for reinforced masonry members shall conform to the shape, lines and dimensions of members indicated and shall be sufficiently rigid to prevent deflections which may result in cracking or other damage to supported masonry. Curing shall be maintained, and forms shall remain on girders and beams not less than 10 days after completion of the members. Not less than 16 hours shall elapse before uniform construction loads are applied to completed masonry members; not less than 64 hours shall elapse before concentrated loads are applied.

6.14 Cleaning: Clean mortar from faces of brick at sloping brick sills as work progresses and remove bond breaker material in accordance with manufacturer's recommendations. At the completion of the masonry work, holes in exposed masonry shall be pointed, and defective joints shall be cut out and tuck pointed solidly with mortar. Exposed surfaces of exterior and interior brickwork shall be cleaned in accordance with brick manufacturer's recommendations. Other exposed masonry surfaces shall be cleaned to remove all excess mortar and as necessary to receive finishes specified in other sections. Work which may be damaged, stained, or discolored, shall be protected during the cleaning process; work that is damaged, stained, or discolored shall be restored to its original condition or replaced.

---END---

SECTION 04390. BRICK PAVERS

1. APPLICABLE PUBLICATIONS: The following publications of the issues listed below, but referred to thereafter by basic designation only, form a part of this specification to the extent indicated by the references thereto:

1.1 American Society for Testing and Materials (ASTM) Publications:

C67-73	Sampling and Testing Brick and Structural Glazed Tile.
C144-76	Aggregate for Masonry Mortar.
C150-77	Portland Cement.
C216-75a	Facing Brick (Solid Masonry Units Made From Clay or Shale).

2. QUALITY CONTROL: Approvals, except those required for field installation, field application and field tests, shall be obtained before delivery of materials to the project site.

2.1 Sample Panel: Prior to beginning work, prepare for the Contracting Officer's approval one 6 foot by 6 foot sample panel of brick pavers, showing color and texture of brick, grout color, joint finish and brick pattern. Prepare sample panel in sufficient number until a sample panel is approved by the Contracting Officer. The variation in color and texture of the units in finished work shall not exceed that of the samples approved by the Contracting Officer. Leave panel in place for the duration of the work, and protect panel from damage.

3. SUBMITTALS:

3.1 Tests and Certificates: The testing requirements for materials incorporated in referenced documents will be waived provided the Contractor submits certificates from the manufacturer stating that materials furnished for this project conform to all requirements of this specification and the referenced documents. Material certificates shall be submitted to and approved by the Contracting Officer. Copies of the test reports need not be submitted except as specifically requested by the Contracting Officer.

3.1.1 Sample Certificate: The certificate shall not contain statements that could be interpreted to imply that the product does not meet all requirements specified, such as "as good as"; "achieve the same end use and results as materials formulated in accordance with the referenced specification"; "equal or exceed the service and performance of the specified material". The certificate should simply state that the product conforms to all requirements specified.

SAMPLE CERTIFICATE

The manufacturer hereby certifies that all following products being furnished for this project conform to all requirements of the project specifications and the respective reference specifications:

MANUFACTURER AND PRODUCT	REFERENCE SPECIFICATION
John Doe Company Portland Cement	ASTM C150

SIGNATURE AND TITLE

3.2 Shop Drawings: Shop drawings shall be submitted to and approved by the Contracting Officer before delivery of materials to the site. Shop drawings shall show layout, dimensions, location of expansion and control joints, brick pattern, and details.

3.3 Samples: The following samples shall be submitted to and approved by the Contracting Officer before delivery of materials to the site.

(1) Pavers: Six units showing color, range, texture, and size.

(2) Grout: One bag.

(3) Setting Bed Admixture: One quart.

(4) Grout Admixture: One quart.

3.4 Manufacturer's Installation Procedures: Manufacturer's currently recommended installation procedures shall be submitted to and approved by the Contracting Officer before work is started. Installation procedures shall accompany shop drawings.

4. DELIVERY AND STORAGE: Cement and other cementitious materials shall be delivered to the site and stored in unbroken bags, barrels, or other approved containers, plainly marked and labeled with the manufacturers' names and brands. Grout shall be stored in dry, weathertight sheds or enclosures, and shall be stored and handled in a manner which will prevent the inclusion of foreign materials and damage by water or dampness. Paver units shall be handled with care to avoid chipping and breakage. Materials stored on newly constructed floors shall be stacked in such manner that the uniformly distributed loading does not exceed 50 psf. Materials shall be protected from contact with earth and exposure to the weather, and shall be kept dry until used. Materials containing frost or ice shall not be used.

5. MATERIALS: The source of supply for materials which will affect the appearance of the finished work shall not be changed after the work has started.

5.1 Brick Pavers: Brick pavers shall conform to ASTM C216, Type FBS, Grade SW, without cores. Provide all special shapes and sizes required. All pavers shall be manufactured at one time and stock piled before beginning shipments to the job site. Pavers shall be provided in color, range, texture, size, and thickness to match samples on display at the Office of the Contracting Officer.

5.2 Portland Cement: ASTM C150, Type I.

5.3 Sand: ASTM C144, washed clean and graded in accordance with admixture manufacturer's recommendations.

5.4 Expansion and Control Joint Materials: Expansion and control joint materials are specified in section entitled "Calking".

5.5 Grout: A chemical blend of carefully graded quartz aggregate, Portland cement, water retaining agents, and colorfast pigments. Grout shall be provided in color to match samples on display at the Office of the Contracting Officer.

5.6 Bond Breaker: Type recommended by brick paver manufacturer.

5.7 Admixtures:

5.7.1 For Setting Bed: Setting bed admixture shall be equal to Laticrete International, Incorporated Tile Liquid No. 4237.

5.7.2 For Grout: Grout admixture shall be equal to Laticrete International, Incorporated Laticrete 3701.

6. PROPORTIONS:

6.1 General:

6.1.1 Setting Bed: One part Portland cement and three parts dry sand, gauged with setting bed admixture in accordance with manufacturer's recommendations.

6.1.2 Slurry Bond Coat: Proportion in accordance with setting bed admixture manufacturer's recommendations.

6.2 Grout: Proportion in accordance with grout and grout admixture manufacturer's directions.

7. MIXING: Mix materials in accordance with manufacturer's directions.

8. INSPECTION: Examine surfaces to receive pavers, and do no work until defects have been corrected. Insure that all surfaces are dry, clean, firm, and to accurate elevations and slopes as indicated before commencing installation.

9. ENVIRONMENTAL CONDITIONS: Provide a minimum temperature of 50 degrees F during installation and until mortar bed and grout have cured.

10. PREPARATION OF PAVERS:

10.1 Cutting: Cut pavers with motor-driven masonry saws only. Cut units as required to provide pattern and to fit adjoining work neatly. Use full units without cutting where necessary.

10.2 Precoating: Precoat face of brick pavers with bond breaker material. Apply bond breaker material in accordance with manufacturer's recommendations. Completely remove bond breaker material from paver surfaces which are in contact with mortar bed and grout.

10.3 Determining Absorption Rates: Determine paver absorption rates in accordance with ASTM C67. Wet paver, which has an absorption rate more than 0.025 ounces per square inch per minute, sufficiently so that rate of absorption when laid does not exceed this rate.

11. EXPANSION AND CONTROL JOINTS: Locate expansion and control joints in pavers over joints in structural floors; where subfloor materials change; where pavers abut restraining surfaces such as perimeter walls; at intervals of 24 feet each way in large areas, and at locations indicated. Construct expansion and control joints same width as paver joints. Utilize removable wood strip to establish joint width, and extend joint completely through pavers and setting bed.

12. INSTALLATION:

12.1 Setting Bed: Clean concrete slabs before installing setting bed. Install setting bed in accordance with setting bed admixture manufacturer's recommendations. Apply mortar setting bed to floor, and rod and compact with a steel trowel. Level setting bed to tolerances required for finished floor.

12.2 Pavers: Install slurry bond coat in accordance with setting bed admixture manufacturer's recommendations. Lay pavers in pattern indicated. Set and level each paver. Set paver with 3/8 inch joints. Joints shall be uniform in width and shall align perfectly.

12.3 Grout: Install grout in accordance with manufacturer's directions. Force grout into joints, strike flush and tool slightly concave.

12.4 Sealant: When preparing and applying expansion and control joint materials, follow safety precautions recommended by manufacturer. After pavers have been grouted and completely dry, remove wood strip and brush or air blast joints clean. Protect all exposed joint edges with pressure-sensitive adhesive tape. Install back-up, primer and sealant materials in accordance with manufacturer's recommendations and in accordance with section

entitled "Calking". Remove tape immediately after application of sealant. Clean primer spillage in accordance with manufacturer's recommendations.

13. CURING: Cure work in accordance with setting bed admixture, grout and grout admixture manufacturer's recommendations.

14. CLEANING: Clean mortar and grout from faces of pavers as work progresses. Remove bond breaker in accordance with manufacturer's recommendations.

15. TOLERANCES: Provide finished floor which is level and within ± 1/8 inch of true plane in eight feet.

16. ADJUSTMENTS: Remove and replace pavers which are loose, chipped, broken, stained or otherwise damaged, or units that do not match adjoining units. Provide new units to match adjoining units and install as hereinbefore specified. Eliminate evidence of replacement. Pavers shall be checked by sounding with a wood rod. Replace all hollow sounding pavers at no cost to the Government.

17. PROTECTION: Protect work from the elements and close spaces to traffic and other work for at least seven days after completion. Protect pavers after cleaning.

---END---

SECTION 05120. STRUCTURAL STEEL

1. APPLICABLE PUBLICATIONS: The following publications of the issues listed below, but referred to thereafter by basic designation only, form a part of this specification to the extent indicated by the references thereto:

1.1 Federal Specifications:

TT-C-490B	Cleaning Methods and Pretreatment of Ferrous Surfaces for Organic Coatings.
TT-P-86G	Paint, Red-Lead-Base, Ready-Mixed.
TT-P-645	Primer, Paint, Zinc-Chromate, Alkyd Type.

1.2 Military Specifications:

MIL-P-15328C & Am 1	Primer (Wash), Pretreatment Blue, (Formula No. 117-B for Metals).

1.3 American Institute of Steel Construction (AISC):

Manual of Steel Construction - 7th Edition.

1.4 American National Standards Institute (ANSI):

B18.22.1-1965 (R 1975)	Plain Washers.

1.5 American Society for Testing and Materials (ASTM):

A36-75	Structural Steel.
A53-76	Welded and Seamless Steel Pipe.
A307-76B	Carbon Steel Externally and Internally Threaded Standard Fasteners.
A325-76C	High-Strength Bolts for Structural Steel Joints, Including Suitable Nuts and Plain Hardened Washers.
A501-76	Hot-formed Welded and Seamless Carbon Steel Structural Tubing.

1.6 American Welding Society (AWS):

D1.1-75 (with 1976 & 1977 Revisions)	Structural Welding Code.

1.7 Research Council on Riveted and Bolted Structural Joints of The Engineering Foundation (RCRBSJ):

Specification for Structural Joints Using ASTM A325 or A490 Bolts.

2. QUALITY CONTROL: Approvals, except those required for field installations, field applications, and field tests, shall be obtained before custom fabrication is started and before delivery of materials or equipment to the project site.

3. SUBMITTALS:

3.1 Materials Tests and Test Reports: The testing requirements for materials incorporated and referenced documents will be waived provided the manufacturer submits certificates stating that previously manufactured materials have been tested by recognized laboratories, that such materials meet testing requirements specified, and that the materials furnished for this project are of the same type, quality, manufacture and make as that tested. Copies of the test reports need not be submitted except as specifically requested by the Contracting Officer.

3.1.1 Sample Certificate: The certificate shall not contain statements that could be interpreted to imply that the proposed material does not meet all requirements for the specified material, i.e.; "as good as"; "achieve the same end use and results as materials formulated in compliance with the specified material"; "exceed or equal service and performance for specified material". The certificate should be simple and should state only that the proposed material meets the requirements for the specified material.

SAMPLE CERTIFICATE

The manufacturer hereby certifies that previously manufactured materials have been tested by recognized laboratories, that the tested material is of the same type, quality, manufacture and formulation as that furnished for this project, and that the tested material meets all the requirements of the following specifications:

SPECIFIED MATERIAL	TESTED MATERIAL
ASTM A36	John Doe Company Carbon Steel

SIGNATURE AND TITLE

3.2 Shop Drawings: Shop drawings for structural steel shall be submitted for approval. Shop drawings shall include complete information necessary for the fabrication of the component parts of the structure, including the location, type and size of all bolts and welds. All welds shall be indicated by standard welding symbols of the AWS. Design drawings shall not be used for shop drawings.

4. DELIVERY AND STORAGE: Materials shall be handled, shipped, and stored in a manner that will prevent distortion or other damage. Material shall be stored in a clean, properly drained location out of contact with the ground. All damaged material shall be replaced or repaired in an approved manner by and at the expense of the Contractor.

5. MATERIALS: Unless otherwise specified, materials shall conform to the applicable requirements of the AISC's "Manual of Steel Construction".

5.1 Carbon Steel: Carbon steel for all-purpose bolted or welded construction shall conform to ASTM A36.

5.2 Pipe Columns: ASTM A501 or A53 (Type E or S, Grade B).

5.3 Circular Washers For Common Bolts: Circular washers for common bolts shall conform to ANSI B18.22.1, type A.

5.4 Beveled Washers for American Standard Beams and Channels: Beveled washers shall be square or rectangular, shall taper in thickness, and shall be smooth.

5.5 High Strength Steel Bolts and Nuts: High strength steel bolts and nuts shall conform to ASTM A325.

5.6 Circular Washers For High Strength Bolts: Circular washers for high strength bolts shall conform to ASTM A325.

5.7 Anchor Bolts: ASTM A36 with cut threads or ASTM A307.

5.8 Welding Electrodes and Rods: Welding electrodes and rods shall conform to AWS D1.1.

5.9 Grout: Grout shall be a pre-mixed, non-metallic, non-shrink, non-corrosive grout having a minimum compressive strength of 8,000 psi at 28 days.

6. FABRICATION:

6.1 General: Fabrication shall be in accordance with the applicable provisions of the AISC's "Manual of Steel Construction". Workmanship shall be equal to standard commercial practice in modern structural shops. Fabrication and assembly shall be done in the shop to the greatest extent possible. Holes shall be provided where necessary to secure other work to structural steelwork.

6.2 Welding: Welding of structural steelwork shall be in accordance with AWS D1.1.

6.3 High-Strength Steel Bolts: The design and assembly of structural joints using high-strength steel bolts shall be according to the RCRBSJ's "Specification for Structural Joints Using ASTM A325 or A490 Bolts".

6.4 Shop Painting: Except as otherwise specified all structural steelwork, except steel work to be embedded in concrete or mortar, shall be shop painted. Surfaces to be welded shall not be coated within three inches of the weld, prior to welding. Surfaces shall be thoroughly dry and clean when the paint is applied. No painting shall be done in freezing or wet weather except under cover; the temperature shall be above 45 degrees F but not over 90 degrees F. Paint shall be applied in a workmanlike manner, and all joints and crevices shall be coated thoroughly. Surfaces which will be concealed or inaccessible after assembly shall be painted prior to assembly.

6.4.1 Cleaning: Except as modified herein, surfaces shall be cleaned to bare metal by an approved blasting process. Surfaces that may be damaged by blasting shall be cleaned to bare metal by powered wire brushing or other mechanical means. Surfaces which will be enclosed from the weather and subject to exposure no more corrosive than an indoor atmosphere controlled for human comfort, may be cleaned by wire brushing or other manual or mechanical means for removal of loose mill scale, rust, dirt, and other deleterious substances. Cleaned surfaces which become contaminated with rust, dirt, oil, grease, or other contaminants shall be washed with solvents until thoroughly clean. Steel to be embedded in concrete shall be free of dirt and grease. Bearing surfaces, shall not be painted but shall be coated with an approved rust preventive, applied in the shop. The coating shall be removed just prior to field erection using a remover approved by the rust preventive manufacturer. The surfaces, when assembled, shall be free from rust, grease, dirt and other foreign matter.

6.4.2 Pretreatment: Immediately after cleaning, surfaces shall be coated with a coat of pretreatment coating conforming to specification MIL-P-15328 applied to a dry film thickness of 0.3 to 0.5 mil or be given a crystalline phosphate base coating conforming to TT-C-490, method I, except that the phosphate base coating shall be applied only to blast cleaned, bare metal surfaces. Pretreatment may be omitted when red lead paint conforming to type I of specification TT-P-86 is used.

6.4.3 Priming: Treated surfaces shall be primed as soon as practicable after the pretreatment coating has dried. Except as modified herein, the primer shall be a coat of zinc chromate primer conforming to the specification TT-P-645 or a coat of red lead paint, type I or type III, conforming to specification TT-P-86, applied to a minimum dry film thickness of 2.0 mils. Damage to primed surfaces shall be repaired with same shop primer.

7. ERECTION:

7.1 General: Except as modified herein, erection shall be in accordance with the AISC's "Manual of Steel Construction". Erecting equipment shall be suitable for the work and shall be in first class condition. Where parts cannot be assembled or fitted properly as a result of errors in fabrication or of deformation due to handling or transportation, such condition shall be reported immediately and approval of the method of correction obtained; the correction shall be made in the presence of the approving authority. The straightening of plates and angles or other shapes shall be done by approved methods. If heating of metal is approved for straightening, it shall not be to a higher temperature than that producing a dark "cherry red" color. After heating, the metal shall be cooled as slowly as possible. There shall be no evidence of fracture on the surface of the metal after straightening. The heating of heat-treated parts for straightening will not be permitted. Steelwork shall be drained properly; pockets in structures exposed to the weather shall be filled with an approved waterproof material. Safety belts and lines shall be used by workmen aloft on high structures, unless safe working platforms or safety nets are provided.

7.2 Connections: Anchor bolts and other connections between the structural steel and foundations shall be provided and shall be properly located and built into connecting work. Connections for which details are not indicated shall be designed in accordance with AISC's "Manual of Steel Construction".

7.3 Base Plates and Bearing Plates: Column base plates for columns and bearing plates for beams, girders, and similar members shall be provided. Base plates and bearing plates shall be provided with full bearing after the supported members have been plumbed and properly positioned. The area under the plate shall be dry-packed solidly with grout.

7.4 Temporary Flooring: Wood planking shall be provided over the entire floor level in buildings where structural steel is being erected and at alternate floor levels between this level and the level at which permanent floor filling or floor filling forms have been provided. Planks for temporary floors shall be free from protruding nails and splinters, and shall be not less than two inches in nominal thickness. The planks shall be laid close together with all ends over a solid bearing to prevent tipping and the ends overlapped at least 4 inches. Planks shall be fastened securely to the framework of the structure. Permanent floor construction shall be put in as the building progresses, and as closely behind the erecting, welding, bolting, and painting as practicable.

7.5 Tolerances: Erection tolerances shall be in accordance with the "Code of Standard Practice" of the AISC's "Manual of Steel Construction", as modified herein. In addition to the requirements of the "Code of Standard Practice", the displacement of the column centerline from the established column location shall not be more than 1/4 inch in any direction at the base of the column as measured in the plane of the footing.

7.6 Temporary welds and backing strips shall not be removed.

8. QUALIFICATION OF WELDERS: Welding shall be performed by qualified welders. The qualification of welders and the duration of qualification period shall be in accordance with the requirements of AWS D1.1. Any welder found to be producing unsatisfactory work even though he has passed qualification tests shall be immediately recertified or replaced with a qualified welder. The Contractor's Quality Control representative shall ascertain that welders are qualified under AWS D1.1.

9. INSPECTION OF WELDS: Visual inspection of welding shall be made while the welders are making the welds and again after the work is completed for the penetration of the weld metal, fusion, and general ability of the operator. After the welding is completed, welds shall be hand or power wire brushed and thoroughly cleaned before the inspector makes the check inspection. The inspector shall pay particular attention to surface cracking, surface porosity, surface slag inclusions, undercut, overlap, gas pockets and size of weld. Defective weldings shall be corrected in accordance with the applicable requirements of AWS D1.1.

---END---

SECTION 05200. OPEN WEB STEEL JOISTS

1. APPLICABLE PUBLICATIONS: The following publications of the issues listed below, but referred to thereafter by basic designation only, form a part of this specification to the extent indicated by references thereto.

1.1 Federal Specifications:

TT-C-490B	Cleaning Methods and Pretreatment of Ferrous Surfaces for Organic Coatings.
TT-P-86G	Paint, Red-lead-base, Ready-mixed.
TT-P-645	Primer, Paint, Zinc-chromate, Alkyd Type.

1.2 Military Specifications:

MIL-P-15328C & Am 1	Primer (Wash), Pretreatment Blue, (Formula No. 117-B for Metals).

1.3 American Institute of Steel Construction (AISC):

Manual of Steel Construction - Seventh Edition.

1.4 American Welding Society (AWS):

D1.1-75 (with 1976 & 1977 Revisions)	Structural Welding Code.

1.5 Steel Joist Institute (SJI):

Standard Specifications and Load Tables for Open Web Steel Joists - J-Series and H-Series.

2. QUALITY CONTROL: Approvals, except those required for field installations, field applications, and field tests, shall be obtained before custom fabrication is started and before delivery of material or equipment to the project site.

2.1 Materials Tests and Test Reports: The testing requirements for materials incorporated in referenced documents will be waived provided the manufacturer submits certificates stating the previously manufactured materials have been tested by recognized laboratories, that such materials meet testing requirements specified, and that the materials furnished for this project are of the same type, quality, manufacture and make as that tested. Copies of the test reports need not be submitted except as specifically requested by the Contracting Officer.

3. SUBMITTALS:

3.1 Shop Drawings: Shop drawings and design calculations for all joists and accessories shall be submitted and approved before delivery of any materials to the site. Shop drawings indicating joist type and size, layout in plan, methods of anchoring, framing at openings, and spacing of bridging shall be submitted. Design drawings shall not be used for shop drawings.

4. DELIVERY AND STORAGE: Joists and accessories shall be handled, transported, and stored at the job site in such a manner as to prevent permanent distortion of any part or other damages affecting their structural integrity. Damaged items that cannot be restored to like-new condition shall be replaced at no additional cost to the Government. All items shall be stored off the ground in a well drained location, protected from the weather and easily accessible for inspection and handling.

5. REQUIREMENTS:

5.1 General: Except where otherwise indicated or specified herein, design, materials, fabrication and erection of steel joists shall be in accordance with AISC's "Manual of Steel Construction" and SJI's "Standard Specifications and Load Tables for Open Web Steel Joists - J-Series and H-Series". Bridging, sag rods, extended ends, ceiling extensions, anchors, bolts, headers, trimmers and bearing plates, shall conform to AISC's "Manual of Steel Construction" and SJI's "Standard Specifications and Load Tables for Open Web Steel Joists - J-Series and H-Series".

5.2 Shop Painting: All steel joists shall be shop painted. Surfaces to be welded shall not be coated within three inches of the weld, prior to welding. Surfaces shall be thoroughly dry and clean when the paint is applied. No painting shall be done in freezing or wet weather except under cover; the temperature shall be above 45 degrees F but not over 90 degrees F. Paint shall be applied in a workmanlike manner, and all joints and crevices shall be coated thoroughly.

5.2.1 Cleaning: Steel joists shall be cleaned by an approved blasting process, wire brushing, or other manual or mechanical means for removal of loose mill scale, rust, dirt, and other deleterious substances. Cleaned surfaces which become contaminated with rust, dirt, oil, grease, or other contaminants shall be washed with solvents until thoroughly clean. The surfaces, when assembled, shall be free from rust, grease, dirt and other foreign matter.

5.2.2 Pretreatment: Immediately after cleaning, surfaces shall be coated with a coat of pretreatment coating conforming to specification MIL-P-15328 applied to a dry film thickness of 0.3 to 0.5 mil or be given a crystalline phosphate base coating conforming to specification TT-C-490, method I, except that the phosphate base coating shall be applied only to blast cleaned, bare metal surfaces. Pretreatment may be omitted when red lead paint conforming to type I of specification TT-P-86 is used.

5.2.3 Priming: Treated surfaces shall be primed as soon as practicable after the pretreatment coating has dried. Except as modified herein, the primer shall be a coat of zinc chromate primer conforming to specification TT-P-645 or a coat of red lead paint, type I or type III, conforming to specification TT-P-86, applied to a minimum dry film thickness of 2.0 mils. After erection, connections and areas of abraded shop paint shall receive paint of the same type used for the shop coat.

5.3 Field Welding: Field welding shall be performed in accordance with AWS Code D1.1 and shall be performed by welders qualified in accordance with the requirements specified therein.

---END---

SECTION 05320. STEEL ROOF DECKS

1. APPLICABLE PUBLICATIONS: The following publications of the issues listed below, but referred to elsewhere by basic designation only, form a part of this specification to the extent indicated by the references thereto:

1.1 Military Specification:

MIL-P-21035 & Am 1	Paint, High Zinc Dust Content, Galvanizing Repair.

1.2 American Iron and Steel Institute (AISI):

Cold-Formed Steel Design Manual (1968 Edition).

1.3 American Society for Testing and Materials (ASTM):

A525-76	Steel Sheets, Zinc-coated (Galvanized) by the Hot-dip Process, General Requirements.

1.4 American Welding Society (AWS):

D1.1-75 (with 1976 & 1977 Revisions)	Structural Welding Code.

1.5 Steel Deck Institute (SDI):

Basic Design Specifications (Latest Edition).

2. QUALITY CONTROL: Approvals, except those required for field installations, field applications, and field tests, shall be obtained before delivery of materials or equipment to the project site.

3. SUBMITTALS:

3.1 Shop Drawings and Catalog Data: Show a large scale cross-sectional detail of the decking, various connections, bearing on structural supports, methods of welding, attachment of accessories, roof layout, and other pertinent details. Design calculations shall be submitted upon request.

3.2 Tests and Certificates: The testing requirements for materials incorporated in referenced documents will be waived provided the Contractor submits certificates from the manufacturer stating that the materials furnished for this project conform to all requirements of this specification and the referenced documents. Copies of the test reports need not be submitted except as specifically requested by the Contracting Officer.

3.2.1 Sample Certificate: The certificate shall not contain statements that could be interpreted to imply that the product does not meet all require-

ments specified, such as "as good as"; "achieve the same end use and results as materials formulated in accordance with the referenced specification"; "equal or exceed the service and performance of the specified material". The certificate should simply state that the product conforms to all requirements specified.

SAMPLE CERTIFICATE

The manufacturer hereby certifies that the following products being furnished for this project conform to all requirements of the project specifications and the respective reference specifications:

MANUFACTURER AND PRODUCT	REFERENCE SPECIFICATION
John Doe Company Steel decking	AISI's "Cold-Formed Steel Design Manual"

SIGNATURE AND TITLE

4. DELIVERY, STORAGE, AND PROTECTION: Steel decking shall be delivered, stored, handled, and installed in a manner to protect it from corrosion, deformation, and other type damage. Special care shall be exercised not to damage the material or overload the deck during the entire construction period. The maximum uniform distributed storage load shall not exceed the design live load. The deck shall not be used for storage or as a working platform until the units have been welded in position. All damaged material shall be replaced by the Contractor at no expense to the Government. Decking stored at the site before erection shall be stacked on platforms or pallets, arranged to provide proper circulation, and covered with tarpaulins or other suitable weathertight covering. The Contractor shall provide protection as necessary to prevent rusting and damage to protective coatings. Decking that becomes rusted or on which protected coatings become loosened shall be replaced with new decking at no additional cost to the Government.

5. GENERAL REQUIREMENTS: Steel roof decking shall be provided where indicated and shall be the product of a manufacturer who is established as a fabricator of steel roof decking. All accessories required for a complete installation of the decking shall be provided. Decking shall have a depth of 1-1/2 inches and shall have ribs the full depth of the decking spaced not over 6 inches on centers.

6. DESIGN: The roof system shall be designed in accordance with the requirements of the AISI "Cold-Formed Steel Design Manual" and SDI's "Basic Design Specifications", except as specified otherwise herein. The roof system shall be designed to support a live load of 20 pounds per square foot. Dead load shall be assumed as 10 pounds per square foot. The maximum allowable deflection under total loading shall be 1/240 of the span. Roof decking having a cross-sectional configuration that differs from the units indicated may be used, provided that the properties of the proposed units are equal to,

or greater than, the properties of the units indicated. Side edges of deck units shall be designed to lap or interlock with adjoining deck units. Steel deck and anchorage shall be designed for a net wind uplift of 21 pounds per square foot.

6.1 Moment of Inertia: The moment of inertia of steel roof deck shall not be less than required by the following formula:

$$I = \frac{1.67(1)^3 (1.5+t)}{18 \times 10^6}$$

where I = movement of inertia (in.^{4})
1 = average roof deck span (in.)
t = thickness of insulation required (in.)

7. MATERIALS:

7.1 Steel: Steel used in the fabrication of decking shall conform to the requirements of the AISI's "Cold-Formed Steel Design Manual", except as specified otherwise herein.

7.1.1 Minimum Gage: Steel roof decking shall be not lighter than that listed in the following table and in no case lighter than 22 gage.

Maximum permissable spans
(Center to center of supporting members)

Gage	0 to 1 inch rib opening	over 1 inch to 1-3/4 inches rib opening	over 1-3/4 inches to 2-1/2 inches rib opening
22	--	5-1/2 feet	6 feet
20	5 feet	6 feet	6-1/2 feet
18	6 feet	6-1/2 feet	7-1/2 feet

7.2 Zinc-Coating and Shop Painting: Decking and metal accessories shall be zinc-coated and shop painted. Zinc-coating shall be G90 Coating Designation in accordance with ASTM A525. Both sides of metal decking and accessories shall receive a phosphate treatment and a spray, dip, or roller coat of approved rust-inhibitive paint, with an oven-dried finish. The shop paint shall be of a type that is suitable for the application of field applied finish paint, specified in another section.

7.3 Accessories: Metal accessories shall be of the same material as the decking and shall be not lighter than 20 gage, unless specified otherwise herein. All accessories shall be the decking manufacturer's standard type and shall be provided as follows:

7.3.1 Adjusting Plates: Adjusting plates or segments of deck units shall be provided in locations too narrow to accommodate full-size units. As

far as practical, the plates shall be the same gage and configuration as the decking.

7.3.2 End Closures: End closures shall be provided to close the open ends at parapets, end walls, eaves, and openings thru the roof. Closures shall be not lighter than 22 gage.

7.3.3 Closures Above Partitions: Closures shall be provided for closing voids above interior walls and partitions that are perpendicular to the direction of the configurations. Closures above typical partitions shall be rubber, plastic or sheet steel.

7.3.4 Cover Plates: Cover plates or underlapping sleeves shall be provided at end joints between adjoining non-lapping units.

7.3.5 Miscellaneous Items: Various types of plates and closures shall be provided as indicated or as necessary to complete the work.

8. INSTALLATION: The deck units shall be placed on supports, properly adjusted and aligned at right angles to supports before being permanently welded in place. Inaccuracies in alignment or leveling of supports shall be corrected before decking is permanently welded in place. End laps of units shall occur over supports only. Minimum lap for the overlapping type shall be 2 inches. Minimum bearing for the abutting type of deck units shall be in accordance with AISI's "Cold-Formed Steel Design Manual", and underlapping sleeves, cover plates, or pressure sensitive tape as standard with the deck manufacturer shall be provided. On spans under 10 feet, the deck units shall extend over three or more supports. Side laps of each deck unit shall be fastened to the adjoining unit at 3-feet on center by crimping, with sheet metal screws or mechanical device.

8.1 Welding: Welding shall conform to AWS D1.1. The deck units shall be welded to supports by means of electric arc-welding. Welding shall be performed by qualified welders. The qualification of welders and the duration of qualification period shall be in accordance with AWS D1.1. The location, size, and spacing of welds shall be shown on the approved shop drawings. Warped or bent units shall be clamped or weighted to create firm contact between units and supports while welding is being performed.

8.2 Repair of Coatings: Welds shall be cleaned by chipping or wire brushing. Welds, cut edges, and damaged portions of zinc-coatings shall be heavily coated with high zinc dust paint conforming to MIL-P-21035, and touched-up with same type paint used for shop paint.

8.3 Openings: Openings through roof shall be reinforced and framed as necessary for rigidity and load-carrying capacity. Holes or other openings required for the work of other trades shall be drilled or cut and adequately reinforced by the respective trade; such holes or other openings larger than 6 inches in diameter shall be approved by the deck manufacturer.

8.4 Inspection of Installation Decking for Flat Top Surface: The top surface of the decking shall be inspected for flatness after installation. A 4 foot straightedge shall be placed across the decking ribs over the structural supporting members at all locations. If the straightedge fails to touch the entire top surface of the decking or if top surfaces of abutting units are not in alignment, corrective measures or replacement shall be provided at no additional cost to the Government. After corrective measures or replacement has been performed, the decking shall be reinspected.

---END---

(a) Finished Panel:

(1) Flame Spread: 25

(2) Smoke Developed: 135

(b) Insulating Core:

(1) Flame Spread: 25

(2) Fuel Contributed: 5

(3) Smoke Developed: 350

3. SUBMITTALS:

3.1 Tests and Certificates: The testing requirements for materials incorporated in referenced documents will be waived provided the Contractor submits certificates from the manufacturer stating that materials furnished for this project conform to all requirements of this specification and the referenced documents. Copies of the test reports need not be submitted except as specifically requested by the Contracting Officer.

3.1.1 Sample Certificate: The certificate shall not contain statements that could be interpreted to imply that the product does not meet all requirements specified, such as "as good as"; "achieve the same end use and results as materials formulated in accordance with the referenced specification"; "equal or exceed the service and performance of the specified material". The certificate should simply state that the product conforms to all requirements specified.

SAMPLE CERTIFICATE

The manufacturer hereby certifies that all following products being furnished for this project conform to all requirements of the project specifications and the respective reference specifications:

MANUFACTURER AND PRODUCT	REFERENCE SPECIFICATION
John Doe Company Galvanized Steel	ASTM A525

SIGNATURE AND TITLE

3.2 Samples: Samples of materials specified below shall be submitted and approved before work is started:

2.1.2 Abrasion Resistance: Coefficient of abrasion of 67 minimum according to ASTM D968.

2.1.3 Pencil Hardness: "F" minimum.

2.1.4 Solvent Resistance: 100 Double MEK rules minimum.

2.1.5 Adhesion: No pick-off when tape tested over 1/16 inch crosshatch.

2.1.6 Salt-Spray: Few scattered blisters no larger than ASTM #4 according to ASTM B117 and no more than 1/16 inch creepage from areas scribed to bare metal after 500 hours.

2.1.7 Humidity Resistance: Few scattered blisters no larger than ASTM #4 according to ASTM D2247 after 1,000 hours.

2.1.8 Chalking Resistance: No greater than ASTM D659 number 8 rating according to ASTM D659 after exposure for 5000 hours in Sunshine Arc Weathermeter XWR using 60/60 cycle.

2.1.9 Color Change: No greater than 5 NBS units as determined in accordance with ASTM D2244 after removal of external deposits and after exposure for 5000 hours in Sunshine Arc Weatherometer XWR using 60/60 cycle.

2.1.10 Water Immersion: No pick-off when tape tested over crosshatch area after immersion in aerated distilled water 80 degrees $\pm$ 10 degrees F after 500 hours.

2.1.11 Formability: No failure in adhesion or rupture of coating when tested according to ASTM D1737 withstanding 180 degree bend around 1/8 inch mandrel.

2.2 Performance Testing:

2.2.1 Thermal Properties: Units 2 inches thick, containing insulation shall provide a minimum "U" value as follows when tested in accordance with ASTM C236. "U" value corrected to 15 MPH wind outside and still air inside.

(a) "U" value: 0.08 BTU/Hr/Ft^2/degrees F.

2.2.2 Bond Strength: No metal primer interface corrosion or delamination shall occur after 1000 hours at 135 degrees F and 100% relative humidity. No delamination after 2-1/2 hours in a 2 psi 212 autoclave.

2.2.3 Static Air Infiltration: Zero air infiltration under 2.0 inches of water pressure through panel or panel joint.

2.2.4 Fire Ratings: When tested in accordance with ASTM E84, panel and core shall have values not greater than the following:

SECTION 07420. COMPOSITE METAL SIDING

1. APPLICABLE PUBLICATIONS: The following publications of the issues listed below, but referred to thereafter by basic designation only, form a part of this specification to the extent indicated by references thereto:

1.1 American Institute of Steel Construction (AISC) Publication:

Code of Standard Practice for Steel Buildings and Bridges.

1.2 American Society for Testing and Materials (ASTM) Publications:

A446-76	Steel Sheet, Zinc-coated (Galvanized) by the Hot-dip Process, Structural (Physical) Quality.
A525-76	Steel Sheet Zinc-coated (Galvanized) by the Hot-dip Process.
B117-73	Salt Spray (Fog) Testing
C236-66 (1971)	Thermal Conductance and Transmittance of Built-up Sections by Means of the Guarded Hot Box.
D523-67 (1972)	Specular Gloss.
D659-74	Chalking of Exterior Paints.
D968-51 (1972)	Abrasion Resistance of Coatings of Paint, Varnish, Lacquer, and Related Products by the Falling Sand Method.
D1737-62 (1973)	Elongation of Attached Organic Coatings with Cylindrical Mandrel Apparatus.
D2244-68	Color Differences of Opaque Materials.
D2247-68 (1973)	Coated Metal Specimens at 100 Percent Relative Humidity.
E84-77	Surface Burning Characteristics of Building Materials.

2. QUALITY CONTROL: Approvals, except those required for field installations, field applications and field tests, shall be obtained before custom fabrication is started and before delivery of materials or equipment to the project site.

2.1 Test Requirements for Coating System: Coating system specified herein shall meet the following test requirements:

2.1.1 Gloss: 30 $\pm$ 5 reflectivity at 60 degrees according to ASTM D523.

compatible with the downspouts. Downspouts terminating in splash blocks shall be provided with elbow-type fittings. Concrete splash blocks are specified in section entitled "Cast in Place Concrete".

7.6 Flashing at Roof Penetrations: Metal flashing shall be provided for all pipes, conduits projecting through the roof surface, flue and boiler stacks.

7.7 Base Flashing at Parapet Walls: Where sloped roofs abut parapet walls, base flashings shall be laid. The flashing shall extend up vertical surfaces not less than 6 inches, and not less than 4 inches under roof covering. Flashing strips shall overlap the previously laid flashing not less than 3 inches; strips shall be fastened at their upper edge to the treated wood blocking, with compatible large head roofing nails. Flashing shall be installed and fitted so as to be completely weathertight.

7.8 Counterflashing at Parapet Walls: Counterflashing shall be inserted into brick course immediately below brick coping as shown on drawings and shall be extended 6 inches down vertical surfaces over upturned vertical leg of base flashing. Exposed edges of counterflashing shall be folded 1/2 inch. End laps in counterflashing shall be not less than 3 inches and shall be made weathertight with sealant. Lengths of metal counterflashing shall not exceed 10 feet. The flashings shall be formed to the required shapes before installation. The concealed edge of counterflashings built into masonry parapet shall be turned down not less than 1/4 inch and shall extend not less than one brick width into wall. Counterflashing shall provide a spring action against base flashing.

7.9 Roof Edge Drip Strips: Edge drip strips shall be prefabricated in shapes and sizes as indicated on the drawings and in lengths not less than 8 feet with 1/2 inch joint for expansion and contraction. Edge drips shall extend down 6 inches from roof edge. The upper edge of drips shall be turned under roof pans and roof edge cleat and nailed securely to perimeter blocking with same fastener for continuous roof edge cleat at spacing recommended by the preformed metal roofing and fascia manufacturer for design loads. The lower edge of drip shall be hooked at least 3/4 inch over continuous edge cleat strip and bent as shown on drawings to provide drip. Prefabricated mitered corners shall be provided for external corners. Face fastening will not be permitted.

7.10 Joint Sealing Material: Sealing material of the type recommended by the preformed metal roofing and fascia manufacturer shall be provided to seal all trim accessories, base and counterflashing and elsewhere as necessary to provide weathertight construction.

8. FIELD REPAIR AND TOUCH-UP: Where pans or accessories have factory finish damaged, repair in accordance with manufacturer's tough-up system. Repaired surfaces not acceptable shall be replaced without expense to the Government.

---END---

to the treated wood furring and blocking at 25-1/2 inches on center maximum with two one-inch long nails. The 1-1/2 inch standing seam of the adjoining edge of the next course shall be locked over the 3/4 inch standing edge and anchor clip. The horizontal pan laps shall be 4 inch maximum, with the upper pan having a one inch hook into a 22-inch cleat at lap and fasten per manufacturer's recommendations. Laps shall be designed to provide for any thermal expansion of metal pans.

7.2.2 Pans Attached to Structural Steel Supports at Fascia: The standing seams shall be vertical and parallel with the end walls and align with the roof seams. In applying the metal, the 3/4 inch preformed turned out at right angle pan edge shall be secured to the 1-1/4 inch hot channels at 18 inches on center with an anchor clip and fastener. The 1-1/2 inch standing seam of the adjoining edge of the next course shall be locked over the 3/4 inch standing edge and anchor clip. Continuous sheet steel drips and starters used at lower end of preformed metal fascia pans shall be fastened to the bottom 1-1/4 inch hot channels with the same fastener that attaches the fascia pan where laps are required they shall be 4 inches.

7.3 Trim Accessories: Sheet steel trim, starters, drips, "Z" closures, top closures, metal coping cap and other accessories in connection with preformed metal roofing and fascia shall be provided as indicated and as necessary to provide a watertight installation. Details of installation which are not indicated shall be in accordance with pan manufacturer's printed instructions and details or the approved shop drawings. Installation shall allow for expansion and contraction of flashing.

7.4 Gutters: Gutters shall be the hung type and of the size and shape indicated on the drawings. Gutters shall be supported as shown on drawings and be permitted free thermal movement. Gutters shall be fabricated in accordance with specifications, standards, and practices of SMACNA. Gutters shall be provided in sizes indicated complete with mitered corners, end caps, outlets, brackets, straps, hangers, and other accessories necessary for installation. Gutters shall be fabricated as single section in length as indicated on drawings. Gutters shall be installed below the slope line of the roof so that snow and ice can slide clear. Gutters shall be supported on approved type adjustable hanger spaced not more than 30 inches on centers. Gutters shall be adjusted to slope uniformly to outlet.

7.5 Downspouts: Downspouts shall be of flat metal of the shapes and sizes indicated on the drawings, and shall be provided complete including gutter to downspout transition. Downspouts shall be provided in approximately 10-foot lengths; end joints shall telescope not less than 1-1/2 inches, and longitudinal joints shall be locked. Gutter outlets shall be provided with wire ball strainers of a standard type for each outlet. Strainers shall fit tight into outlets and shall be of the same material used for gutters. Downspouts shall be kept not less than one inch away from walls and shall be fastened to the walls at top, bottom, and at not to exceed 5-foot centers intermediatley between, with approved type leader straps or concealed rack-and-pin type fastners; straps and fasteners shall be formed from metal

5.9 Treated Wood Furring and Perimeter Blocking: Treated wood furring and perimeter blocking are as specified in section entitled "Rough Carpentry".

6. FINISH: Finish coating on all exterior metal preformed roofing, fascia, trim, starters, drips, "Z" closures, top closures, metal coping cap, gutters, downspouts, transitions, straps, hangers, flashing and exposed fasteners shall be a polyvinylidene fluoride (PVF_2) coating based on fluorocarbon resins. The percent of fluorocarbon resin shall be not less than 70 percent. After pretreatment of metal substrate as prescribed by coating manufacturer, apply by roll-coating or spray-coating one coat of zinc-chromate epoxy primer yielding approximately 0.2 mil dry film thickness. Oven bake primer in accordance with manufacturer's directions. Following application of prime coat, apply by roll-coating or spray-coating one coat of polyvinylidene fluoride to yield a minimum of 0.8 mil dry film thickness. Cure finish coat in oven at approximately 600 degrees F. Finish color shall be low gloss Redwood. Coat unexposed surfaces of trim with manufacturer's standard epoxy primer.

7. INSTALLATION: All materials shall be installed in strict accordance with the manufacturer's printed erection instructions, and the approved shop drawings. Care shall be exercised in storing, handling, and installation to prevent any damage to the pans. Pans shall be in full and firm contact with the supports. Extreme care shall be exercised in drilling pilot holes for fastenings to keep drills perpendicular. After drilling, all metal filings and burrs shall be removed from holes prior to installing fasteners and washers. Size and spacing of fasteners used in erection shall be as recommended by the manufacturer and shall be designed to withstand the design loads.

7.1 General: Examine alignment of structural steel before erecting preformed fascia. Do not proceed with installation if structural steel is not aligned to the tolerances set up by AISC's "Code of Standard Practice for Steel Buildings and Bridges". Felt shall be laid directly under preformed metal roofing pans and under preformed metal fascia pans that are fastened to treated wood furring and perimeter blocking with a limited number of roofing nails. Provide a minimum 4-inch side and 6-inch end lap at all overlapping sheets. Seal all lapping conditions in accordance with felt manufacturer's recommendations. Erection shall be by the manufacturer's own erection division or a previously approved and licensed installer. Erection shall be started correctly and the panels held true to line. Erect panels with vertical lines plumb.

7.2 Pans:

7.2.1 Pans Attached to Treated Wood Furring and Blocking: The standing seams shall be parallel with the slope of the roof and align with fascia seams. In applying the metal, the 3/4 inch preformed turned up at right angle pan edge shall be laid flat on roof and then an anchor clip recommended by the pan manufacturer shall be locked over the 3/4 inch standing edge and fastened

tarpaulins or other suitable weathertight covering. All metal sheets or panels shall be stored so that water which might have accumulated during transit or storage will drain. The sheets or panels shall not be stored in contact with materials which might cause staining. Upon arrival on the job site, the sheets or panels shall be inspected for moisture accumulation. If found wet, the moisture shall be removed and the sheets or panels shall be re-stacked and protected until used.

5. MATERIALS: (Preformed metal roofing and fascia is indicated on drawing as "MT3").

5.1 Pans: Preformed roofing and fascia pans shall be nominal 20-inches wide and fabricated from 24 gage steel sheets conforming to ASTM A446 with G90 coating designation (zinc-coated). Pan locking system shall be male to female with 1-1/2-inch high standing seam.

5.2 Trim Accessories: Sheet metal trim, starters, drips, "Z" closures, top closures, and metal coping cap shall be of same material and gage as the metal roofing and fascia pans.

5.3 Anchor Clip and Cleats: Anchor clip and cleats shall be type and gage recommended by preformed roof and fascia panel manufacturer.

5.4 Sealant: Type recommended by preformed roofing and fascia panel manufacturer. All exposed sealant shall have finish color to match preformed roofing and fascia.

5.5 Fasteners: Metal fasteners for attachment of metal roofing and fascia pans to structural steel supports,treated wood furring, treated wood perimeter blocking, and fasteners for attachment of trim, starters, drips, "Z" closures, top closures, metal coping cap, anchor chips, cleats, gutters, downspouts and metal flashing systems shall be as approved, and in accordance with manufacturer's recommendations. Unless otherwise recommended by the metal roofing and fascia panel manufacturer, all fasteners shall be self-tapping screws, except as specified herein. Other types of fasteners of the pan manufacturer's standard type may be used if prior approval is obtained. The fastening system shall be designed to withstand the design loads. Fasteners to secure pans shall be concealed and shall be cadmium plated carbon steel. Exposed fasteners for gutters and downspouts shall be stainless steel with polymerized chloroprene or neoprene washers. Fasteners used in the erection shall be designed to withstand the design loads.

5.6 Asbestos Felt Sheets: No. 30 asbestos felt conforming to ASTM D250.

5.7 Gutters and Downspouts: The gutters, downspouts, transitions, straps and hangers shall be the same material and gage as the metal roofing and fascia pans.

5.8 Base and Counterflashing: All base and counterflashing shall be fabricated from the hot-dipped process (galvanized), sheet steel 24 gage.

3.1.1 Sample Certificate: The certificate shall not contain statements that could be interpreted to imply that the product does not meet all requirements specified, such as "as good as"; "achieve the same end use and results as materials formulated in accordance with the referenced specification"; "equal or exceed the service and performance of the specified material". The certificate should simply state that the product conforms to all requirements specified.

SAMPLE CERTIFICATE

The manufacturer hereby certifies that all following products being furnished for this project conform to all requirements of the project specifications and the respective reference specifications:

MANUFACTURER AND PRODUCT	REFERENCE SPECIFICATION
John Doe Company Galvanized Steel	ASTM A525

SIGNATURE AND TITLE

3.2 Samples: Samples of materials specified below shall be submitted and approved before work is started:

(a) Preformed Roofing and Fascia Panel Assembly: Two units 12 inches long by full width of panel with specified finish and locking system.

(b) Fasteners: Two of each type.

(c) Sealant: Two tubes of each type.

3.3 Shop Drawings: Shop drawings shall be submitted and approved before work is started. Shop drawings shall show profile; gage of sheet; location, spacing and types of fasteners; location, gage, shape, and method of attachment of all trim and flashings; other details as may be required for a weathertight installation; large scale cross-section of roofing and fascia; layout of roofing and fascia; detail of laps; and other pertinent details. Design calculations and complete erection instructions shall be submitted. The shop drawings and data shall be complete in one submittal.

3.4 Manufacturer's Catalog Data or Other Descriptive Data: Manufacturer's catalog data or other descriptive data of joint sealing material, roofing and fascia, including factory protective coatings and color finish, related flashings and accessories, and fasteners.

4. DELIVERY AND STORAGE: Prefabricated components, sheets, panels, and other manufactured items shall be delivered, stored and handled in such a manner that they will not be damaged or deformed. Materials stored on the site before erection shall be stacked on platforms or pallets and covered with

2.1.5 Adhesion: No pick-off when tape tested over 1/16-inch crosshatch.

2.1.6 Salt-Spray: Few scattered blisters no larger than ASTM No. 4 according to ASTM B117 and no more than 1/16-inch creepage from areas scribed to bare metal after 500 hours.

2.1.7 Humidity Resistance: Few scattered blisters no larger than ASTM No. 4 according to ASTM D2247 after 1,000 hours.

2.1.8 Chalking Resistance: No greater than ASTM D659 No. 8 rating according to ASTM D659 after exposure for 5,000 hours in Sunshine Arc Weathermeter XWR using 60/60 cycle.

2.1.9 Color Change: No greater than 5 NBS units as determined in accordance with ASTM D2244 after removal of external deposits and after exposure for 5,000 hours in Sunshine Arc Weathermeter XWR using 60/60 cycle.

2.1.10 Water Immersion: No pick-off when tape tested over crosshatch area after immersion in aerated distilled water 80 degrees ± 10 degrees F. after 500 hours.

2.1.11 Formability: No failure in adhesion or rupture of coating when tested according to ASTM D1737 withstanding 180 degree bend around 1/8-inch mandrel.

2.2 Performance Testing:

2.2.1 Bond Strength: No metal primer interface corrosion or delamination shall occur after 1,000 hours at 135 degrees F. and 100 percent relative humidity. No delamination after 2-1/2 hours in a 2 psi 212 autoclave.

2.2.2 Static Air Infiltration: Zero air infiltration under 2.0 inches of water pressure through pan or pan joint.

2.2.3 Fire Ratings: When tested in accordance with ASTM E84, the pans shall have:

(a) Flame spread rating of 25 or less and a smoke developed rating of 135 or less.

3. SUBMITTALS:

3.1 Tests and Certificates: The testing requirements for materials incorporated in referenced documents will be waived provided the Contractor submits certificates from the manufacturer stating that materials furnished for this project conform to all requirements of this specification and the referenced documents. Copies of the test reports need not be submitted except as specifically requested by the Contracting Officer.

SECTION 07412. PREFORMED METAL ROOFING AND FASCIA

1. APPLICABLE PUBLICATIONS: The following publications of the issues listed below, but referred to thereafter by basic designation only, form a part of this specification to the extent indicated by the references thereto:

1.1 American Institute of Steel Construction (AISC) Publication:

Code of Standard Practice for Steel Buildings and Bridges.

1.2 Sheet Metal and Air Conditioning Contractors National Association (SMACNA) Publication:

Architectural Sheet Metal Manual (1972).

1.3 American Society for Testing and Materials (ASTM) Publications:

A446-76	Steel Sheet, Zinc-Coated (Galvanized) by the Hot-Dip Process, Structural (Physical) Quality.
B117-73	Salt Spray (Fog) Testing.
D250-70	Asphalt-Saturated Asbestos Felts for Use in Waterproofing and in Constructing Built-Up Roofs.
D523-67 (1972)	Specular Gloss.
D659-74	Chalking of Exterior Paints.
D968-51 (1972)	Abrasion Resistance of Coatings of Paint, Varnish, Lacquer, and Related Products by the Falling Sand Method.
D1737-62 (1973)	Elongation of Attached Organic Coatings with Cylindrical Mandrel Apparatus.
D2244-68	Color Differences of Opaque Materials.
D2247-68 (1973)	Coated Metal Specimens at 100 Percent Relative Humidity.
E84-77	Surface Burning Characteristics of Building Materials.

2. QUALITY CONTROL: Approvals, except those required for field installations, field applications and field tests, shall be obtained before custom fabrication is started and before delivery of materials or equipment to the project site.

2.1 Test Requirements for Coating System: Coating system specified herein shall meet the following test requirements:

2.1.1 Gloss: 30 ± 5 reflectivity at 60 degrees according to ASTM D523.

2.1.2 Abrasion Resistance: Coefficient of abrasion of 67 minimum according to ASTM D968.

2.1.3 Pencil Hardness: "F" minimum.

2.1.4 Solvent Resistance: 100 Double MEK rules minimum.

pilot holes for fastenings to keep drills perpendicular. After drilling, all metal filings and burrs shall be removed from holes prior to installing fasteners and washers. Size and spacing of fasteners used in erection shall be as recommended by the manufacturer and shall be designed to withstand the design loads specified herein.

8.1 General: Examine alignment of structural steel before erecting preformed metal siding. Do not proceed with installation if structural steel is not aligned to the tolerances set up by AISC's "Code of Standard Practice for Steel Buildings and Bridges". Erection shall be by the manufacturer's own erection division or a previously approved and licensed installer. Erection shall be started correctly and the panels held true to line. Erect panels with vertical lines plumb. The panels shall be full height without horizontal joints. Panels shall be in full and firm contact with the supports and with each other at side laps. Side laps of all face sheets shall be fastened at a maximum of 12-inches on centers, unless design requirements dictate otherwise. Materials deformed or otherwise damaged shall be removed and new sheets applied.

8.2 Joint Sealing Material: Sealant material of the type recommended by the panel manufacturer shall be provided to seal all face sheet side laps, trim, flashing, closures, and elsewhere as necessary to provide watertight construction.

8.3 Trim: All trim, gravel stop, continuous cleats, flashings and related closures and accessories in connection with the preformed metal siding shall be provided as indicated and as necessary to provide a watertight installation. Details of installation which are not indicated shall be in accordance with the panel manufacturer's printed instructions and details or the approved shop drawings. Installation shall allow for expansion and contraction of flashing.

9. FIELD REPAIR AND TOUCH-UP: Where panels or accessories have factory finish damaged, repair in accordance with manufacturer's touch-up system. Repaired surfaces not acceptable shall be replaced without expense to the Government.

---END---

5.2 Wind Loads: Wind load of 49 pounds per square foot inward; and wind load of 49 pounds per square foot outward.

6. MATERIALS: Preformed metal siding is indicated on Drawings as "MT-2".

6.1 Face Sheet: Face sheet shall be fabricated from sheet steel conforming to ASTM A446 and shall conform to the design criteria, including wind load as indicated on the drawings. Both sides of face sheet shall be galvanized in accordance with ASTM A525 to provide a G90 coating. Covering width shall be of the manufacturer's standard which will meet all the requirements specified herein. Face sheet shall be full height without horizontal joints. Face sheet shall be 1-1/2 inches deep and of configuration to allow a minimum side lap of one configuration.

6.2 Trim: Sheet metal trim including fascia, continuous cleats, flashings, shall be of same gage material and finish as face sheet. Provide all required trim of same finish and color as exterior face sheet located at top of wall, bottom, corners, and elsewhere as indicated or required.

6.3 Sealant: Type recommended by preformed metal siding manufacturer.

6.4 Fasteners: Fasteners for attachment of panels to structural supports and fasteners for attachment of trim shall be as approved, and in accordance with manufacturer's recommendations. Unless otherwise recommended by panel manufacturer, all fasteners shall be self-tapping screws. Other types of fasteners of panel manufacturer's standard type may be used if prior approval is obtained. The fastening system shall be designed to withstand the design loads specified herein. Exposed fasteners for siding and trim shall be stainless steel prepainted with same finish and color to match siding and furnished with composite metal and polymerized chloroprene or neoprene washers.

7. FINISH: Finish coating on exposed surfaces of face sheet and exposed surfaces of trim shall be a polyvinylidene flouride (PVF_2) coating based on fluorocarbon resins. The percent of fluorocarbon resin shall be not less than 70 percent. After pretreatment of metal substrate as prescribed by coating manufacturer, apply by roll-coating or spray-coating one coat of zinc-chromate epoxy primer yielding approximately 0.2 mil dry film thickness. Oven bake primer in accordance with manufacturer's directions. Following application of prime coat, apply by roll-coating or spray coating one coat of polyvinylidene flouride to yield a minimum of 0.8 mil dry film thickness. Cure finish coat in oven at approximately 600 degrees F. Finish color shall be black. Coat unexposed surfaces of face sheet and trim with manufacturer's standard epoxy primer.

8. INSTALLATION: All materials shall be installed in strict accordance with the manufacturer's printed erection instructions, and the approved shop drawings. Care shall be exercised in storing, handling, and installation to prevent any damage to the panels. Extreme care shall be exercised in drilling

MANUFACTURER AND PRODUCT	REFERENCE SPECIFICATION
John Doe Company Galvanized Steel	ASTM A525

SIGNATURE AND TITLE

3.2 Samples: Samples of materials specified below shall be submitted and approved before work is started:

(a) Face Sheet: Two units 12 inches long by full width of face sheet with specified finish.

(b) Fasteners: Two of each type.

(c) Calking: Two tubes of each type.

3.3 Shop Drawings: Shop drawings shall be submitted and approved before work is started. Shop drawings shall show profile; gage of face sheet; location, spacing and types of fasteners; location, gage, shape, and method of attachment of all trim and flashings; other details as may be required for a weathertight installation; large scale cross-section of siding; layout of siding; detail of side laps; and other pertinent details. Design calculations and complete erection instructions shall be submitted. The shop drawings and data shall be complete in one submittal.

3.4 Manufacturer's Catalog Data or other Descriptive Data: Manufacturer's catalog data or other descriptive data of joint sealing material, preformed metal siding, including factory protective coatings and color finish, related flashings and accessories, and fasteners shall be submitted and approved.

4. DELIVERY AND STORAGE: Prefabricated components, sheets, panels, and other manufactured items shall be delivered, stored and handled in such a manner that they will not be damaged or deformed. Materials stored on the site before erection shall be stacked on platforms or pallets and covered with tarpaulins or other suitable weathertight covering. All metal sheets or panels shall be stored so that water which might have accumulated during transit or storage will drain. The sheets or panels shall not be stored in contact with materials which might cause staining. Upon arrival on the job site, the sheets or panels shall be inspected for moisture accumulation. If found wet, the moisture shall be removed and the sheets or panels shall be re-stacked and protected until used.

5. DESIGN CRITERIA:

5.1 Deflection: Maximum allowable deflection L/180.

2.1.5 Adhesion: No pick-off when tape tested over 1/16 inch crosshatch.

2.1.6 Salt-Spray: Few scattered blisters no larger than ASTM #4 according to ASTM B117 and no more than 1/16 inch creepage from areas scribed to bare metal after 500 hours.

2.1.7 Humidity Resistance: Few scattered blisters no larger than ASTM #4 according to ASTM D2247 after 1,000 hours.

2.1.8 Chalking Resistance: No greater than ASTM D659 number 8 rating according to ASTM D659 after exposure for 5000 hours in Sunshine Arc Weathermeter XWR using 60/60 cycle.

2.1.9 Color Change: No greater than 5 NBS units as determined in accordance with ASTM D2244 after removal of external deposits and after exposure for 5000 hours in Sunshine Arc Weatherometer XWR using 60/60 cycle.

2.1.10 Water Immersion: No pick-off when tape tested over crosshatch area after immersion in aerated distilled water 80 degrees $\pm$ 10 degrees F after 500 hours.

2.1.11 Formability: No failure in adhesion or rupture of coating when tested according to ASTM D1737 withstanding 180 degree bend around 1/8 inch mandrel.

3. SUBMITTALS:

3.1 Tests and Certificates: The testing requirements for materials incorporated in referenced documents will be waived provided the Contractor submits certificates from the manufacturer stating that materials furnished for this project conform to all requirements of this specification and the referenced documents. Copies of the test reports need not be submitted except as specifically requested by the Contracting Officer.

3.1.1 Sample Certificate: The certificate shall not contain statements that could be interpreted to imply that the product does not meet all requirements specified, such as "as good as"; "achieve the same end use and results as materials formulated in accordance with the referenced specification"; "equal or exceed the service and performance of the specified material". The certificate should simply state that the product conforms to all requirements specified.

SAMPLE CERTIFICATE

The manufacturer hereby certifies that all following products being furnished for this project conform to all requirements of the project specifications and the respective reference specifications:

SECTION 07411. PREFORMED METAL SIDING

1. APPLICABLE PUBLICATIONS: The following publications of the issues listed below, but referred to thereafter by basic designation only, form a part of this specification to the extent indicated by references thereto:

1.1 American Institute of Steel Construction (AISC) Publication:

Code of Standard Practice for Steel Buildings and Bridges.

1.2 American Society for Testing and Materials (ASTM) Publications:

A446-76	Steel Sheet, Zinc-coated (Galvanized) by the Hot-dip Process, Structural (Physical) Quality.
A525-76	Steel Sheet Zinc-coated (Galvanized) by the Hot-dip Process.
B117-73	Salt Spray (Fog) Testing
D523-67 (1972)	Specular Gloss.
D659-74	Chalking of Exterior Paints.
D968-51 (1972)	Abrasion Resistance of Coatings of Paint, Varnish, Lacquer, and Related Products by the Falling Sand Method.
D1737-62 (1973)	Elongation of Attached Organic Coatings with Cylindrical Mandrel Apparatus.
D2244-68	Color Differences of Opaque Materials.
D2247-68 (1973)	Coated Metal Specimens at 100 Percent Relative Humidity.

2. QUALITY CONTROL: Approvals, except those required for field installations, field applications and field tests, shall be obtained before custom fabrication is started and before delivery of materials or equipment to the project site.

2.1 Test Requirements for Coating System: Coating system specified herein shall meet the following test requirements:

2.1.1 Gloss: 30 ± 5 reflectivity at 60 degrees according to ASTM D523.

2.1.2 Abrasion Resistance: Coefficient of abrasion of 67 minimum according to ASTM D968.

2.1.3 Pencil Hardness: "F" minimum.

2.1.4 Solvent Resistance: 100 Double MEK rules minimum.

12. INSPECTION OF COMPLETED DECK: Upon completion of the job and prior to roofing the expanded polystyrene aggregate roof fill shall exhibit the following characteristics:

(1) The surface shall be firmly bound and free of loose material.

(2) The exposed surface shall feel substantially dry to the touch and not exhibit any visible moisture gloss.

(3) The elevations (drain profiles and slopes) are in agreement with the Drawings and Specifications.

(4) The surface is uniform and even for the application of built-up roofing.

---END---

10. INSTALLATION:

10.1 General: Installation of expanded polystyrene aggregate roof fill shall be under the direct supervision of material manufacturer's technical representative.

10.2 Vapor Barrier: Prime deck with asphalt primer. After primer has dried, start at low point of roof and apply approximately 23 pounds of asphalt per 100 square feet. While asphalt is hot, embed one ply of coated base sheet, lapping each ply 4-inches over preceding ply. Mop full width of each lap. Broom to assure complete embedment. At parapets and curbs turn coated base sheet up wall to height of insulated fill and adhere to wall with asphalt. Flash all projections through vapor barrier with two plies of woven glass reinforcing fabric and three courses of flashing cement, applied alternately.

10.3 Bond Breaker: Embed one layer of felt in adhesive. Apply adhesive in accordance with manufacturer's directions. Butt all ends and edges. Broom to assure complete embedment.

10.4 Metal Stops: Install metal stops at locations where indicated and as recommended by expanded polystyrene aggregate roof fill Manufacturer.

10.5 Expanded Polystyrene Aggregate Roof Fill: Indicated on Drawings as "Roof Fill". The expanded polystyrene aggregate roof fill shall be pumped onto the deck substrate and shall be screeded and finished to the desired elevations and profiles. When insulation board is used in the system, the following procedures shall be used in placing the roof fill:

(1) Roof fill shall be pumped onto the deck substrate and shall be uniformly placed to a depth of approximately 1/2 inch over the deck substrate.

(2) The final thickness of the layer of roof fill between the bottom of the insulation board and the top of the deck substrate shall be approximately 1/8 inch to 1/4 inch to provide an acceptable adhesive bond of the roof fill to the deck substrate.

(3) Immediately following the placement of the initial layer of the roof fill the insulation board shall be placed to permit 1/4 inch to 1/2 inch of roof fill around the perimeter of the insulation board and shall be firmly embedded to provide uniform coating and intimate contact with the freshly placed roof fill.

(4) Roof fill shall be placed over the top surface of the insulation board to the thickness indicated and shall be screeded and finished to the desired elevations and profiles.

11. FIELD TESTS: Perform wet density determinations at the point of placement a minimum of 4 times each pumping day. Sampling procedure shall be in accordance with ASTM C495.

"7.1 Expanded Polystyrene Aggregate Roof Fill: Based on an average thickness of 5 inches, "R" value for expanded polystyrene aggregate roof fill shall not be less than 7.69."

Wind Uplift Test (UL Construction No. NM514, UL File R7193-3	60 psf
Coefficient of Linear Thermal Expansion (ASTM D696, range minus 22 ^{o}F to 86 ^{o}F)	7.6 x 10^{-6} per ^{o}F
Dimensional Stability Linear variation with change in moisture content, factor (ASTM D1037, relative humidity change from 50 to 90%)	2.0 x 10^{-4}
Freeze - Thaw Durability (ASTM C666)	Excellent
Standard Mix	
Cement	564 pounds
Aggregate	18 cu. ft.
Water	36-42 gallons

8. PREPARATORY WORK:

8.1 Inspection: Before commencing work, thoroughly examine all underlying and adjoining work, surfaces, and conditions upon which work is in any way dependent for perfect results. Report all conditions which affect the work. No "waiver of responsibility" for complete, inadequate, or defective or underlying and adjoining work, surfaces, and conditions will be considered, unless notice of such unsatisfactory conditions have been filed and agreed to in writing before work begins. Commencement of work constitutes acceptance of surfaces.

8.2 Cleaning: Remove all oil, grease, dirt, dust, debris, and other detrimental matter in accordance with material manufacturer's recommendations.

9. PROPORTIONING AND MIXING:

9.1 Proportioning: The design mix shall be in the following proportions and shall exhibit a wet density of 31 to 41 pounds per cubic foot at the point of placement.

3 cubic feet of aggregate

6 gallons of water (nominal)

1 bag (94 pounds) Portland Cement

9.2 Mixing: Mix materials by using equipment and procedures approved by the aggregate manufacturer and under the direct supervision of the material manufacturer's technical representative. In addition, see requirements specified in paragraph entitled "Environmental Conditions".

"6.4x Insulation Board: Expanded polystyrene, 4 feet by 4 feet, 1-1/2 inches thick having a "R" factor of 6.26. Unit weight shall not exceed 1.5 pounds per cubic foot."

6.5 Vapor Barrier:

6.5.1 Asphalt Primer: ASTM D41.

6.5.2 Woven Glass Reinforcing Fabric: ASTM D1668, treated with asphalt.

6.5.3 Asphalt: ASTM D312, Type III.

6.5.4 Coated Base Sheet: ASTM D2626, Type II.

6.5.5 Flashing Cement: Federal Specification SS-C-153, Type I, Class A or Class B as applicable.

6.6 Bond Breaker:

6.6.1 Felt: ASTM D226, 15 pound type.

6.6.2 Adhesive: Type recommended by expanded polystyrene aggregate roof fill manufacturer. Water soluble adhesive not allowed.

6.7 Metal Stops: Federal Specification QQ-S-775, Type I, Class d coating, and 20 gage.

7. TYPICAL PROPERTIES OF EXPANDED POLYSTYRENE AGGREGATE ROOF FILL: Typical properties of expanded polystyrene aggregate roof fill shall be as follows:

Properties	Pumped Roof Deck Values
Compressive Strength (28 days, ASTM C495)	200-300 psi
Thermal Conductivity, "k" (ASTM C177 at 75°F Mean Temp. and 24 lb. density)	0.65 BTU/hr/ft^2/F/in.
Wet Density	31-41 lb. per cu. ft.
Air-Dry Weight (cured at 28 days at 50% relative humidity and 73°F)	26-36 lb. per cu. ft.
Oven-Dry Density (ASTM C495, except final cure at 122°F)	24-34 lb. per cu. ft.
Water Vapor Permeability (ASTM C355 dry cup)	3.3 perm-inches
Water Absorption (ASTM C272, 24 hr. immersion)	0.16 increase in weight factor

4. DELIVERY AND STORAGE: Deliver materials in the original unopened packages or bundles bearing the brand name of the manufacturer. Store materials in such a manner as to prevent deterioration or the intrusion of foreign matter. Keep materials dry until ready to use. Store material outside away from building and open flame. Stack insulation board in such a manner to prevent damage.

5. ENVIRONMENTAL CONDITIONS: Normal mixing and placing procedures shall be used when air temperatures are consistently above 40 degrees F. When air temperatures of 40 degrees F. to 30 degrees F. are predicted during the first 24 hours after placing and the temperature of the feed water available for mixing is less than 50 degrees F. use heated water for mixing. Heated water for mixing shall not exceed 80 degrees F. when measured at the discharge of the auxiliary water heater. Materials shall not be installed when air temperatures are consistently below 30 degrees or during precipitation.

6. MATERIALS:

6.1 Aggregate: Closed cell expanded polystyrene. Unit weight shall not exceed 2.5 pounds per cubic foot. Aggregate properties based on one pound per cubic foot density shall be as follows:

Properties	Value	Test Method
Mechanical Strength		
Compressive strength at 5% deformation	14 psi	ASTM D1621
Compressive set after 10% deformation	2.3%	--
Thermal		
Thermal conductivity K, BTU/(hr.)(sq.ft.)(^{o}F/in.)		
at 75°F	0.26	ASTM C177
at 40°F	0.245	ASTM C177
at 0°F	0.225	ASTM C177
Linear thermal expansion, in./in./^{o}F	3-4x10^{-5}	ASTM D696
Maximum temperature for continuous exposure, ^{o}F	175	--
Water Resistance		
Water absorption, lbs. H_2O/sq.ft. surface	0.05	MIL-P-19644
Water vapor transmission, perm.-in.	1.2-2.2	ASTM C355
Capillarity	None	--

6.2 Portland Cement: ASTM C150, Type I, II, or III.

6.3 Water: Clean and free from deleterious amounts of acid, alkali, oil, salt, and other organic material.

for this project conform to all requirements of this specification and the referenced documents. Copies of the test reports need not be submitted except as specifically requested by the Contracting Officer.

3.1.1 Sample Certificate: The certificate shall not contain statements that could be interpreted to imply that the product does not meet all requirements specified, such as "as good as"; "achieve the same end use and results as materials formulated in accordance with the referenced specification"; "equal or exceed the service and performance of the specified material". The certificate should simply state that the product conforms to all requirements specified.

SAMPLE CERTIFICATE

The manufacturer hereby certifies that all following products being furnished for this project conform to all requirements of the project specifications and the respective reference specifications:

MANUFACTURER AND PRODUCT	REFERENCE SPECIFICATION
John Doe Company Portland Cement	ASTM C150

SIGNATURE AND TITLE

3.2 Samples: The following samples shall be submitted for approval before the work is started:

(1) Aggregate: Two quarts.

(2) Insulation Board: Two units, approximately 12-inches by 12-inches.

(3) Coated Base Sheet: Two units, approximately 12-inches by 12-inches.

(4) Woven Glass Reinforcing Fabric: Two units, approximately 12-inches by 12-inches.

(5) Felt: Two units, approximately 12-inches by 12-inches.

3.3 Manufacturer's Mixing and Installation Procedures: Submit current copies of material manufacturer's recommended standard mixing and installation procedures before work is started.

3.4 Manufacturer's Quality Certificate: The company placing the expanded polystyrene aggregate roof fill shall provide a certificate stating that the material was mixed, placed and finished in accordance with this specification and manufacturer's recommendations.

Koppers system

SECTION 07245. EXPANDED POLYSTYRENE AGGREGATE ROOF FILL

1. APPLICABLE PUBLICATIONS: The following publications of the issues listed below, but referred to thereafter by basic designation only, form a part of this specification to the extent indicated by the references thereto.

1.1 Federal Specifications:

QQ-S-775E	Steel Sheets, Carbon, Zinc-Coated.
SS-C-153C	Cement, Bituminous, Plastic.

1.2 Military Specification:

MIL-P-19644C	Plastic Molding Material (Polystyrene Foam, Expanded Bead).

1.3 American Society for Testing and Materials (ASTM):

C150-77	Portland Cement.
C177-76	Steady-State Thermal Transmission Properties by Means of the Guarded Hot Plate.
C272-53(1976)	Water Absorption of Core Materials for Structural Sandwich Constructions.
C355-64(1973)	Water Vapor Transmission of Thick Materials.
C495-77a	Compressive Strength of Lightweight Insulating Concrete.
C666-77	Resistance of Concrete to Rapid Freezing and Thawing.
D41-73	Primer for Use With Asphalt in Dampproofing and Waterproofing.
D226-75	Asphalt-saturated Roofing Felt for Use in Membrane Waterproofing and Built-up Roofing.
D312-71	Asphalt for Use in Constructing Built-up Roof Coverings.
D696-70	Coefficient of Linear Thermal Expansion of Plastics.
D1037-72a	Wood-Base Fiber and Particle Panel Materials.
D1621-73	Compressive Properties of Rigid Cellular Plastics, Test for.
D1668-73	Woven Glass Fabrics Treated for Use in Waterproofing and Roofing.
D2626-73	Asphalt-base Sheet for Use in Construction of Built-up Roofs.

2. QUALITY CONTROL: Approvals, except those required for field installation, field application and field tests, shall be obtained before delivery of materials to the project site.

3. SUBMITTALS:

3.1 Tests and Certificates: The testing requirements for materials incorporated in referenced documents will be waived provided the Contractor submits certificates from the manufacturer stating that materials furnished

permanent roofing and flashing and standing seam metal roofing and flashing are applied. Storing, walking, wheeling, or trucking will not be permitted directly on insulation, or on roofed surfaces; smooth, clean board or plank walkways, runways, and platforms shall be provided near supports, as necessary, to distribute weight to conform to indicated live load limits of the roof construction.

---END---

multiple layers of insulation are used, the second layer and all succeeding layers shall be mopped in as specified hereinbefore under general application of roof insulation. Adhesive may be provided in lieu of asphalt for the application of insulation on metal decks. If adhesive is used, the application shall be in accordance with the adhesive manufacturer's printed instruction. Thickness of insulation shall satisfy both the specified "C" factor and the minimum thickness for rib coverage. Minimum thickness of insulation on steel decks shall be as follows. If the specified "C" value requires greater thickness, the greater thickness shall be provided.

Rib Width In Inches	Minimum Insulation Thickness In Inches
Up to but not including 1	1/2
Up to but not including 1-3/4	1
Up to but not including 2-3/8	1-1/4
Up to but not including 2-3/4	1-1/2

9.5.2 Insulation Over Vapor Barrier: Insulation shall be applied in a solid mopping of steep asphalt.

9.6 Cant Strips: Where indicated, cant strips shall be provided at intersections of the roof with walls, parapets, and curbs extending above the roof. The face of the cant strips shall have an incline of 45 degrees. Where possible, cant strips shall be nailed to adjoining surfaces. Where installed against non-nailable materials, the cant strips shall be applied in a heavy mopping of steep asphalt or set in plastic cement.

9.7 Tapered Edge Strips: Where indicated, edge strips shall be provided in the right-angle formed by the junction of the roof and wood nailing strips that extend above the level of the roof. Edge strips shall be tapered one to 1-1/2 inches in one foot. Where possible, edge strips shall be nailed to adjoining surfaces. Where installed against non-nailable materials, the edge strips shall be applied in a heavy mopping of steep asphalt or set in plastic cement.

10. PROTECTION OF APPLIED INSULATION: Each day's application of insulation shall be completely covered with standing seam metal roofing or built up bituminous roofing. Method of protecting each day's application of insulation which receives standing seam metal roofing shall meet the approval of the Contracting Officer. Each day's application of insulation which receives built-up bituminous roofing and cannot be roofed over shall be covered with at least a glaze coat of hot bitumen. Glazed coats, applied to the surfaces which are to receive built-up roofing, shall be of the same type of bitumen as that used in the application of the roofing. The open ends of each day's work shall be protected with temporary water cut-offs which shall be removed when the work is resumed. Open spaces between insulation and parapets (or other walls), and spaces at curbs, etc., shall be protected until

than 350 degrees F at the time of application. Thermometers shall be used to check the temperatures during the heating and application. Kettlemen shall be in attendance at all times during the heating process to insure that the maximum temperature specified is not exceeded.

9.3 Wood Nailers: Treated wood nailers are specified in another section. Nailers shall equal the thickness of the insulation and shall be provided at all eaves, edges, curbs, walls, and roof openings for securing cant strips, gravel stops, gutters, and flashing flanges. Orientation and spacing of nailers shall be in accordance with the recommendations of the insulation manufacturer.

9.4 Vapor Barrier: Provide two plies of 15 pound asphalt saturated felt over poured concrete deck at Sewage Pump Station prior to installing insulation. Poured concrete shall receive a coat of asphalt primer applied at the rate of one gallon per 100 square feet of roof surface prior to receiving asphalt moppings. Steep asphalt shall be applied at the rate of 20 pounds per 100 square feet of surface. Felts of the two ply felt system shall be lapped 19 inches and end laps of each ply shall be not less than 2 inches. Mating surfaces of felts shall be solidly mopped in with steep asphalt. Vapor barrier shall be laid at right angles to the direction of slope. Vapor barrier shall be placed free of wrinkles or buckles. Air bubbles shall be pressed out to obtain proper adhesion between surfaces. At walls edges, and other vertical projections, the vapor barrier shall be extended 6 inches to form a lap which shall later be wrapped around edge of insulation.

9.5 Insulation: Insulation over vapor barrier at Sewage Pump Station shall be laid so that the longitudinal (continuous) joints are parallel to the short dimension of the roof and so that end joints of each course break with those of the adjoining courses. Insulation at Public Works Building shall be laid so that the long joints are parallel to the flutes of the steel deck. When using multiple layers of insulation, the joints of each succeeding layer shall be parallel and broken in both directions (one direction at steel deck) with respect to the layer below. Each layer shall be firmly embedded in a solid steep asphalt mopping; only sufficient area to provide complete embedment of one board shall be mopped at a time. Not less than 25 pounds of asphalt per 100 square feet of roof deck shall be used for mopping each layer of insulation in place, except as specified otherwise. The insulation shall be placed while the asphalt is still hot and fluid. When multiple layers of insulation are used, the second layer and all succeeding layers shall be mopped in as specified herein.

9.5.1 Insulation on Steel Decks: Insulation joints shall occur on solid bearing surfaces only, not over open ribs. The high sections of the deck shall be strip-mopped using 12 to 15 pounds of steep asphalt per 100 square feet of roof surface. The asphalt shall be applied in ribbons parallel to the ribs on every flange of the steel deck for 6-inch rib spacing. On decks with 8-inch rib spacing there shall be two ribbons on each flange. The asphalt shall not be permitted to flow into the ribs (or flutes) of the decking. The insulation shall be placed while the asphalt is still hot and fluid. When

Labels or listing by the Underwriters' Laboratories, Inc., or Factory Mutual Engineering Corporation will be accepted as evidence of conformance in lieu of certified copies of test reports.

7.6 Plastic Cement: SS-C-153, Type I, Class A or B as applicable.

7.7 Asphalt Saturated Felts: ASTM D226.

8. CONDITION OF SURFACES:

8.1 General: All surfaces on which vapor barrier and insulation are to be applied shall be clean, smooth and dry. Concrete surfaces receiving vapor barrier shall also be free of any projections which might puncture the vapor barrier. The condition of the surfaces shall be inspected and approved by Contractor Quality Control representative immediately before the work is started.

8.2 Roof Deck Surfaces: The application of roof insulation will not be permitted on roof decks when the temperature is below 40 degrees F. or when there is ice, frost, or dampness visible on the roof deck. All roof deck surfaces shall be checked for defects before any work is started; any defects or inaccuracies in the roof deck surface shall be corrected in a satisfactory manner so as to eliminate poor drainage, hollow, and low spots. Steel decks shall be examined to assure that panels are properly secured to structural members and to each other and that surfaces of top flanges are flat or slightly convex, and are without stiffening grooves.

8.2.1 Test for Surface Dryness, Poured Concrete Deck:

a. Foaming: When poured on the surface to which felts are to be applied, one pint of the bitumen, when heated in the range of 350 to 400 degrees F, shall not foam upon contact.

b. Strippability: After the bitumen used in the foaming test application has cooled to ambient temperatures, the coating shall be tested for adherence. Should any portion of the sample be readily stripped clean from the surface, the surface shall not be considered dry and application shall not be started. Should rain occur during application, the work shall be stopped and shall not be resumed until the surface has been tested by the method above and found dry.

9. APPLICATION:

9.1 General: Roof insulating materials shall be applied to the roof surfaces indicated in accordance with the requirements specified herein. All roof insulating materials used shall be kept dry before, during and after installation.

9.2 Temperature of Steep Asphalt: In the application of insulation, steep asphalt shall not be heated above 450 degrees F and shall not be less

(c) Cellular Glass Block: HH-I-551, type IV, without paper facing, block type. Cellular glass boards shall not be used over steel decking having rib openings greater than 2-3/8 inches wide.

(d) Composite Boards: Composite board insulation shall consist of urethane board factory bonded to either expanded perlite or mineral fiber board insulation. The other surface of the urethane board shall be covered with a layer of glass fiber mat or asphalt saturated felt securely bonded to the urethane during manufacture. Urethane shall conform to HH-I-530, Type I, Grade 2, except that the minimum density shall be 1.7 pounds per cubic foot. The perlite component shall conform to HH-I-529 and mineral fiber board shall conform to HH-I-526. Composite board insulation not permitted on roof of Sewage Pump Station.

7.1.2 Insulation Thickness: Insulation thickness shall be as necessary to provide a "C" value of 0.08 or less, except that for application over steel decks the insulation thickness shall satisfy both the specified "C" value and the minimum thickness for width of rib openings. Any additional materials required due to insulation being provided with thickness other than that indicated shall be provided at no additional cost to the Government.

7.1.3 Surface Burning Characteristics: Roof insulation, except for application on poured in place concrete decks, shall have a flame spread rating not greater than 25 and a smoke developed rating not greater than 50, exclusive of covering, when tested in accordance with ASTM E84. Insulation bearing the UL label and listed by Underwriters' Laboratories as meeting the flame spread and smoke developed ratings, specified herein will be accepted in lieu of certified copies of test reports. Compliance with flame spread and smoke developed ratings will not be required when the insulation has been tested as a part of a roof construction assembly of the type as used for this project and the construction is listed as being fire-acceptable by Underwriters' Laboratories, Inc., or listed as Class 1 construction by Factory Mutual Engineering Corporation. Insulation tested as a part of a roof construction assembly shall be provided with Underwriters' Laboratories, Inc. or Factory Mutual Engineering Corporation labels attesting to the ratings specified herein.

7.2 Cants and Tapered Edge Strips: Preformed cants and tapered edge strips shall be of the same material as used for roof insulation. If the roof insulation manufacturer cannot furnish cants and edge strips rigid perlite board conforming to HH-I-529 or treated wood cants and edge strips shall be provided.

7.3 Asphalt Primer: ASTM D41.

7.4 Steep Asphalt: ASTM D312, type III or IV.

7.5 Adhesive: Adhesive for insulation on steel decks shall conform to the requirements to Underwriters' Laboratories or Factory Mutual Engineering Corporation for the type of roof construction assembly used in this project.

Roof Insulation
Primer
Felts
Asphalt
Adhesive
Plastic Cement

3.2 Tests and Certificates: The testing requirements for materials incorporated in referenced documents will be waived provided the manufacturer submits certificates stating that previously manufactured materials have been tested by recognized laboratories, that such materials meet testing requirements specified, and that the materials furnished for this project are of the same type, quality, manufacture and make as those tested. Copies of the test reports need not be submitted except as specifically requested by the Contracting Officer.

4. DELIVERY AND STORAGE: Materials shall be delivered to the site in the original sealed containers or packages, and shall bear the manufacturer's name and brand designation. Where materials are covered by a referenced specification, the containers or packages shall bear the specification number, type, and class as applicable. Materials shall be stored, handled and installed in a manner to protect them from all damage and from wetting and moisture absorption during the entire construction period. Insulation not stored in buildings or trucks shall be stored above ground on wood pallets and covered with suitable waterproof covering. For 24 hours immediately before laying, felt rolls shall be stacked on ends and stored in an area maintained at a temperature not lower than 50 degrees F. All damaged material shall be replaced by the Contractor at no expense to the Government.

5. ENVIRONMENTAL CONDITIONS: The application of roof insulation will not be permitted on any roof deck when the surface temperature is below 40 degrees F or when there is ice, frost, or dampness visible on the roof deck.

6. PROTECTION OF PROPERTY: Protection shall be provided as specified in section: "Built-up Bituminous Roofing.

7. MATERIALS: Materials shall conform to the respective specifications and standards and to the requirements specified herein.

7.1 Roof Insulation: Indicated on drawings as "Insul 10".

7.1.1 Roof Insulation shall be one of the following materials:

(a) Mineral Fiber Board: HH-I-526, except that the top surface of the insulation shall have an impact-resistant, factory-applied facing.

(b) Expanded Perlite Board: HH-I-529.

SECTION 07241. ROOF INSULATION

1. APPLICABLE PUBLICATIONS: The following publications of the issues listed below, but referred to thereafter by basic designation only, form a part of this specification to the extent indicated by the references thereto:

1.1 Federal Specifications:

HH-I-526C	Insulation Board, Thermal-acoustical Mineral Wool (For Roofs).
HH-I-529B	Insulation Board, Thermal, (Mineral Aggregate).
HH-I-530 & Int Am 1	Insulation Board, Thermal (Urethane).
HH-I-551E	Insulation Block and Boards, Thermal (Cellular Glass).
SS-C-153C	Cement, Bituminous, Plastic.

1.2 American Society for Testing and Materials (ASTM):

D41-73	Primer for Use With Asphalt in Dampproofing and Waterproofing.
D226-75	Asphalt Saturated Roofing Felt for Use in Waterproofing and in Constructing Built-up Roofs.
D312-71	Asphalt for Use in Constructing Built-up Roof Coverings.
E84-77	Surface Burning Characteristics of Building Materials.

1.3 Factory Mutual Engineering Corporation:

Approval Guide-Equipment, Materials, Services for Conservation of Property. (Current Edition)

1.4 Underwriters' Laboratories, Inc.

Building Materials Directory. (Current Edition)

2. QUALITY CONTROL: Approvals, except those required for field installations and field tests, shall be obtained before delivery of materials to the project site.

3. SUBMITTALS:

3.1 Catalog Data: Submit complete literature for each type of each of the following items. Data which describe more than one material, type, size or stem shall be clearly marked to indicate which material, type, size or item the Contractor intends to provide. Data shall be sufficient to show conformance to specified requirements and shall include installation instructions.

8. INSTALLATION:

8.1 Batt or Blanket Insulation: Each space between framing members or furring strips shall be insulated completely with blanket insulation. Continuous strips of blanket shall be cut to the required length for each stud or furring strip space, allowing sufficient length for attachment at top and bottom. Blankets or batts shall be butted snugly. Affixed facing shall be installed with the affixed flanged facing toward the interior (warm in winter) side of the construction. Additional end flanges shall be formed of the facing at sills, headers, soles, plates, and similar construction, by cutting or pushing away the insulation, as necessary, leaving the facing for attachment to framing. Flanges shall be stapled or tacked to the framing on not more than 6-inch centers. Reflective facings shall be installed with an air space of not less than 3/4 inch adjacent to the reflective facing. Insulation having no nailing flanges shall be secured in place by the use of nailing strips, or an approved adhesive standard with the manufacturer. The insulation shall be installed after all electric wiring, plumbing, and other concealed work is in place; areas around electrical outlets, pipes, and all other protruding objects shall be snugly fitted. When water pipes occur in outside wall or ceiling construction, insulation shall be applied between the cold side of the wall or ceiling and the pipe. Large pipes may require compression or removal of some of the insulation, retaining the vaporproofing facing. The insulation shall be cut to fit angles, corners, or irregular spaces, always forming a flange of the affixed facing where insulation facing shall be sealed in a manner that will assure a continuous vapor barrier capable of effectively controlling condensation. Insulation over suspended ceilings shall be supported by the suspended ceiling framework. Pack fire safing insulation into voids where indicated, completely filling the void.

8.2 Separately Applied Vapor Barrier: Install on the interior side of the construction (warm in winter side). Care shall be taken to prevent tears, breaks, or ruptures of any kind which might interfere with the effectiveness of the vapor barrier and the installation shall be accomplished in a manner which will assure a continuous seal. All joints or breaks in vapor barrier facings (affixed or separately applied) shall be sealed in a manner that will assure a vapor barrier capable of effectively controlling condensation.

8.3 Polyethylene Ground Cover: Provide on the earth surfaces in crawl spaces where sprayed-on insulation is provided. The earth in enclosed crawl spaces shall be level; all sharp objects and wood scraps shall be removed before the vapor barrier is applied. A layer of sand approximately two inches thick shall be applied over ground vapor barrier.

---END---

4. DELIVERY, STORAGE AND PROTECTION: Materials shall be delivered to the site in the original sealed containers or packages, and shall bear the manufacturer's name and brand designation. Where materials are covered by a referenced specification, the containers or packages shall bear the specification number, type, and class as applicable. Materials shall be stored and handled in a manner to protect them from damage during the entire construction period.

5. GENERAL REQUIREMENTS: The work includes ceiling and wall insulation. Roof insulation, perimeter insulation, masonry wall insulation, sprayed on insulation, and insulation for piping, ductwork and equipment is specified in other sections.

6. MATERIALS:

6.1 Batt or Blanket Insulation: HH-I-521, except where otherwise specified and except that insulation including coverings shall have a flame spread rating of 25 or less and a smoke developed rating of 50 or less when tested in accordance with ASTM E84.

6.1.1 Thermal Insulation: Shown on drawings as "Insul 2". Type III, with an "R" factor of not less than 11.0.

6.1.2 Sound Attenuation Insulation: Shown on drawings as "Insul 5", "Insul 6", and "Insul 7".

(a) "Insul 5": Type I, 1-1/2 inches thick, 3.0 pcf density.

(b) "Insul 6": Type I, 3 inches thick, 4.0 pcf density.

(c) "Insul 7": Type I, 3 inches thick, 3.0 pcf density.

6.1.3 Fire Safing Insulation: Shown on drawings as "Insul 9": HH-I-558, Form A, Class 1 with 4.0 pcf density.

6.1.4 Separately Applied Vapor Barrier: Type I insulation may be provided in lieu of Type III insulation if a separately applied vapor barrier is provided. Vapor barrier shall be of sheet material having a flame spread rating of 25 or less and a smoke development rating of 50 or less when tested in accordance with ASTM E84, and having a permanent value of one perm or less when tested by procedure A of ASTM E96.

6.2 Polyethylene Ground Cover: PS17 with a permeability rating of 0.5 perm or less when tested in accordance with ASTM E154, and shall have a minimum thickness of 6 mils.

7. PREPARATION: All surfaces on which insulation and vapor barriers are to be applied shall be clean, smooth, dry, and free of any projections which might puncture the vapor barriers. The condition of the surfaces shall be inspected and approved immediately before the work is started.

SECTION 07232. CEILING AND WALL INSULATION

1. APPLICABLE PUBLICATIONS: The following publications of the issues listed, but referred to elsewhere by basic designation only, form a part of this specification to the extent indicated by the references thereto:

1.1 Federal Specifications:

HH-I-521E	Insulation Blankets, Thermal (Mineral Fiber, for Ambient Temperatures).
HH-I-558B & Am 2	Insulation, Blocks, Boards, Blankets, Felts, Sleeving (Pipe and Tube Covering), and Pipe Fitting Covering, Thermal (Mineral Fiber, Industrial Type).

1.2 Department of Commerce Product Standard:

PS17-69	Polyethylene Sheeting (Construction, Industrial, and Agricultural Applications).

1.3 American Society for Testing of Materials (ASTM):

E84-77	Surfacing Burning Characteristics of Building Materials, Test for.
E96-66(1972)	Water Vapor Transmission of Materials in Sheet Form, Test for.
E154-68(1975)	Materials for Use as Vapor Barriers Under Concrete Slabs and as Ground Cover in Crawl Spaces, Testing.

2. QUALITY CONTROL: Approvals, except those required for field installations, field applications and field tests, shall be obtained before delivery of materials to the project site.

3. SUBMITTALS:

3.1 Descriptive Data: Before delivery of any materials to the building site, descriptive data on all insulation materials shall be submitted and approved.

3.2 Materials Tests and Test Reports: The testing requirements for materials incorporated in referenced documents will be waived provided the manufacturer submits certificates stating that previously manufactured materials have been tested by recognized laboratories, that such materials meet testing requirements specified, and that the materials furnished for this project are of the same type, quality, manufacture and make as that tested. Copies of the test reports need not be submitted except as specifically requested by the Contracting Officer.

3.3 Thermal Performance: The insulation manufacturer's certified "R" factor designation shall be shown on the products or on the packages containing the products.

7. INSTALLATION: Wall insulation shall be provided where indicated.

7.1 Walls: Walls shall be insulated by installing board-type insulation on the cavity side of the inner wythe and on concrete surfaces where indicated. Insulation shall be brought up completely to the underside of door and window sills, bond beams, lintels, through wall flashing, and similar interruptions through the cavity before installing these items.

7.1.1 Board-type Insulation: Insulation shall be applied directly to the masonry and concrete by use of approved plastic cement, approved mastic, approved wall ties, or approved mechanical fasteners, as recommended by the insulation manufacturer. Plastic cement may be applied by the full back bed method, or the spot method. Where the spot method is used, at least four spots each having a diameter of approximately 3 inches shall be used with each board. Insulation shall be neatly fitted between obstructions without impaling of insulation on cavity-wall ties or anchors. The insulation shall be applied in parallel courses with joints breaking midway over the course below, shall be applied in moderate contact with adjoining units without forcing, and shall be cut to fit neatly against adjoining surfaces. Remove all damaged insulation.

---END---

SECTION 07221. MASONRY WALL INSULATION

1. APPLICABLE PUBLICATIONS: The following publications of the issues listed below, but referred to thereafter by basic designation only, form a part of this specification to the extent indicated by the references thereto:

1.1 Federal Specifications:

HH-I-524B Insulation Board, Thermal (Polystyrene).

2. QUALITY CONTROL: Approvals, except those required for field installations, field applications and field tests, shall be obtained before custom fabrication is started and before delivery of materials to the project site.

3. SUBMITTALS:

3.1 Samples: One sample of proposed insulating material and method of installation shall be submitted and approved before the materials are delivered to the site.

3.2 Materials Tests and Test Reports: The testing requirements for materials incorporated in referenced documents will be waived provided the manufacturer submits certificates stating that previously manufactured materials have been tested by recognized laboratories, that such materials meet testing requirements specified, and that the materials furnished for this project are of the same type, quality, manufacture and make as that tested. Copies of the test reports need not be submitted except as specifically requested by the Contracting Officer.

4. DELIVERY, STORAGE AND PROTECTION: Materials shall be delivered to the site in the original sealed containers or packages, and shall bear the manufacturer's name and brand designation. Where materials are covered by a referenced specification, the containers or packages shall bear the specification number, type, and class as applicable. Materials shall be stored and handled in a manner to protect them from damage during the entire construction period.

5. MATERIALS:

5.1 Board Type Insulation (Insul 1): "R" factor of 7.0 or more and shall be polystyrene conforming to HH-I-524, Type II, Class B.

6. CONDITION OF SURFACES: Wall surfaces of cavities and concrete surfaces against which insulation is to be applied shall be clean and dry. Surfaces shall be checked to ascertain freedom from protruding mortar, concrete, or other obstacles that may interfere with the installation of the insulation. Such obstacles, if present, shall be removed before insulation is applied.

3.2 Samples: The following samples of materials shall be submitted for approval before the work is started.

(1) Cleaner: One quart.

(2) Insulation: Two samples, 2-feet by 2-feet by thickness applicable for project, mounted on plywood sheets.

4. DELIVERY AND STORAGE: Materials shall be delivered in sealed containers bearing the manufacturer's original labels. Materials shall be stored in an enclosed area free from contact with soil and weather. In addition comply with manufacturer's requirements for delivering and storing. Defective or damaged materials shall be replaced by the Contractor at no expense to the Government.

5. MATERIALS:

5.1 Insulation (Insul 8): Insulation shall consist of cellulose fibers impregnated with a dry adhesive which is activated by a separate liquid adhesive added during application. After application, the insulation shall not disintegrate, rot or shrink, and shall have a flame spread rating of 25 or less and a smoke developed rating of 0 when tested in accordance with ASTM E84. Insulation shall meet the dusting requirements of Federal Specification SS-S-111, and shall be non-toxic and non-irritating.

5.2 Cleaner: Type recommended by insulation manufacturer.

6. PREPARATION: Surfaces scheduled to receive spray-on insulation shall be cleaned of dust, grease, oil, rust, or any other agent that would prevent a secure bond. Apply cleaning material to poured-in-place concrete surfaces in accordance with insulation manufacturer's recommendations.

7. APPLICATION: Insulation shall be applied where indicated in accordance with manufacturer's recommendations to provide a density of approximately 2.0 pounds per cubic foot. Adequate protection shall be provided for surfaces not receiving insulation. Thickness of insulation shall be such to provide a "R" value of 5 or more.

---END---

SECTION 07215. SPRAYED-ON INSULATION

1. APPLICABLE PUBLICATIONS: The following publications of the issues listed below, but referred to thereafter by basic designation only, form a part of this specification to the extent indicated by the references thereto:

1.1 Federal Specifications:

SS-S-111B Sound Controlling Materials (Trowel and Spray Applications).

1.2 American Society for Testing and Materials (ASTM) Publications:

E84-77 Surface Burning Characteristics of Building Materials.

2. QUALITY CONTROL: Approvals, except those required for field installation, field application and field tests, shall be obtained before delivery of materials to the project site.

3. SUBMITTALS:

3.1 Tests and Certificates: The testing requirements for materials incorporated in referenced documents will be waived provided the Contractor submits certificates from the manufacturer stating that materials furnished for this project conform to all requirements of this specification and the referenced documents. Copies of the test reports need not be submitted except as specifically requested by the Contracting Officer.

3.1.1 Sample Certificate: The certificate shall not contain statements that could be interpreted to imply that the product does not meet all requirements specified, such as "as good as"; "achieve the same end use and results as materials formulated in accordance with the referenced specification"; "equal or exceed the service and performance of the specified material". The certificate should simply state that the product conforms to all requirements specified.

SAMPLE CERTIFICATE

The manufacturer hereby certifies that all following products being furnished for this project conform to all requirements of the project specifications and the respective reference specifications:

MANUFACTURER AND PRODUCT	REFERENCE SPECIFICATION
John Doe Company Spray-On Insulation	ASTM E84

SIGNATURE AND TITLE

5. MATERIALS:

5.1 Perimeter Insulation (Insul 3): Insulation shall be one of the following materials meeting the respective requirements and shall be 2-inches thick.

5.1.1 Polystyrene Board: HH-I-524, type II, class B.

5.1.2 Urethane Board: HH-I-530, type II, grade 2, class 1.

5.1.3 Cellular Glass Block: HH-I-551, Type I.

5.1.4 Mineral Fiber Board: HH-I-558, form A, Class 2, rigid, and shall have a factory-applied vapor seal skin one side.

5.2 Plastic Cement: SS-C-153.

6. INSTALLATION: Insulation shall be provided on the interior side of perimeter foundation walls and shall extend to a depth as indicated. The insulation shall be fastened to the wall with masonry nails, asphalt mastic, or clips, as recommended by the manufacturer and horizontally under slabs on grade and shall extend in from the exterior wall a distance of 2 feet.

---END---

SECTION 07210. PERIMETER INSULATION

1. APPLICABLE PUBLICATIONS: The following publications of the issues listed below, but referred to thereafter by basic designation only, form a part of this specification to the extent indicated by the references thereto:

1.1 Federal Specifications:

HH-I-524B & Am 1	Insulation Board, Thermal (Polystyrene).
HH-I-530A & Am 3	Insulation Board, Thermal (Urethane).
HH-I-551E	Insulation Block and Pipe Covering, Thermal Cellular Glass).
HH-I-558B & Am 1	Insulation, Blocks, Boards, Blankets, Felts, Sleeving (Pipe and Tube Covering), and Pipe Fittings Covering, Thermal (Mineral Fiber, Industrial Type).
SS-C-153C	Cement, Bituminous, Plastic.

2. QUALITY CONTROL: Approvals, except those required for field installation, field applications and field tests, shall be obtained before delivery of materials to the project site.

3. SUBMITTALS:

3.1 Samples: One sample of each type of proposed insulating material shall be submitted and approved before the materials are delivered to the site. Samples shall not be larger than 12 inches by 12 inches.

3.2 Materials Tests and Test Reports: The testing requirements for materials incorporated in referenced documents will be waived provided the manufacturer submits certificates stating that previously manufactured materials have been tested by recognized laboratories, that such materials meet testing requirements specified, and that the materials furnished for this project are of the same type, quality, manufacture and make as that tested. Copies of the test reports need not be submitted except as specifically requested by the Contracting Officer.

4. DELIVERY, STORAGE AND PROTECTION: Materials shall be delivered to the site in the original sealed containers or packages, and shall bear the manufacturer's name and brand designation. Where materials are covered by a referenced specification, the containers or packages shall bear the specification number, type, and class as applicable. Materials shall be stored and handled in a manner to protect them from damage during the entire construction period.

dry at the time dampproofing is applied. Surfaces to receive asphalt or fibrous asphalt dampproofing shall be given a priming coat of asphalt primer. Priming coat shall be applied when the ambient temperature is above 40 degrees F and at a rate of approximately one gallon per 100 square feet, fully covering the entire surface to be dampproofed.

7. GENERAL REQUIREMENTS: Bituminous dampproofing shall be provided where indicated and may be the hot application method or the cold application method, except that only the cold application method shall be used in confined spaces where the use of hot bitumen would be hazardous.

8. APPLICATION: Dampproofing shall be applied after the priming coat is dry, but prior to any deterioration of the primed surface, and when the ambient temperature is above 40 degrees F. Dampproofing shall be scheduled so that curing will be accomplished as soon as possible after curing.

8.1 Hot Application Method: Surfaces to be dampproofed shall be given two mop coats of hot asphalt. The mop coats shall be applied uniformly using not less than 20 pounds of asphalt per 100 square feet for each coat. Asphalt shall not be heated above 450 degrees F. Kettlemen shall be in attendance at all times during the heating to insure that the maximum temperature specified is not exceeded. Asphalt shall be hot when applied and shall be fully bonded to the primed surface. The finished surface shall be smooth, lustrous, and impervious to moisture. Dull or porous spots shall be recoated.

8.2 Cold Application Method: Surfaces to be dampproofed shall be given two coats of fibrous asphalt. Each coat shall be applied uniformly using not less than one gallon of fibrous asphalt per 50 square feet. The first coat shall be applied by brush to provide full bond with the primed surface, and the second coat may be brushed or sprayed over a dry first coat. The finished surface shall be of uniform thickness and impervious to moisture. Porous spots shall be recoated.

---END---

SECTION 07160. BITUMINOUS DAMPPROOFING

1. APPLICABLE PUBLICATIONS: The following publications of the issues listed below, but referred to elsewhere by basic designation only, form a part of this specification to the extent indicated by the references thereto:

1.1 Federal Specification:

SS-A-694D Asphalt Roof Coating (Brushing, and Spraying Consistency).

1.2 American Society for Testing and Materials (ASTM):

D41-73 Primer for Use With Asphalt in Dampproofing and Waterproofing.

D449-73 Asphalt for Dampproofing and Waterproofing.

2. QUALITY CONTROL: Approvals, except those required for field installations, field applications, and field tests, shall be obtained before delivery of materials or equipment to the project site.

3. SUBMITTALS:

3.1 Materials Tests and Test Reports: The testing requirements for materials incorporated in referenced documents will be waived provided the manufacturer submits certificates stating that previously manufactured materials have been tested by recognized laboratories, that such materials meet testing requirements specified, and that the materials furnished for this project are of the same type, quality, manufacture and make as that tested. Copies of the test reports need not be submitted except as specifically requested by the Contracting Officer.

4. DELIVERY, STORAGE AND PROTECTION: Materials shall be delivered to the site in the original sealed containers or packages, and shall bear the manufacturer's name and brand designation. Where materials are covered by a referenced specification, the containers or packages shall bear the specification number, type, and class as applicable. Materials shall be stored and handled in a manner to protect them from damage during the entire construction period.

5. MATERIALS:

5.1 Asphalt: ASTM D449, type C.

5.2 Asphalt Primer: ASTM D41.

5.3 Fibrous Asphalt: SS-A-694.

6. PREPARATION OF SURFACES: Masonry surfaces to receive dampproofing shall be cleaned of foreign matter and loose particles and shall be surface

11.3 At Steel Deck: Apply elastomeric membrane with long edges parallel to flutes of steel deck. All edges shall occur over flat surface of steel deck. Lay second ply in same manner as first ply locating laps approximately 18 inches from laps of first ply with laps occurring over flat surface of steel deck.

12. TEST OF ELASTOMERIC MEMBRANE: ~~Prior to concealment, elastomeric membrane on horizontal surfaces over finished spaces shall be covered with 1 inch of ponded water for 24 hours to test watertightness~~. Careful measurement shall be made of the water level at the beginning and end of the 24-hour period. In the event that the water level falls, the water shall be removed and the elastomeric membrane thoroughly dried and inspected. Repairs or replacement shall be made as directed, after which the test shall be repeated. Work shall not proceed before approval and acceptance.

"Prior to concealment, elastomeric membrane on horizontal surfaces over finished spaces shall be covered with 1 inch of ponded water for 24 hours to test watertightness, except at sod roof ponded water shall be 1 inch above top of perforated drain pipe at high point."

9.5 Cleaning Surfaces: Immediately prior to priming surfaces, clean surfaces with a vacuum cleaner or compressed air to remove dust and loose debris.

10. PRIMING: All concrete, expanded polystyrene aggregate roof, and masonry surfaces shall be primed with primer at a coverage of 250 to 350 square feet per gallon. Allow primer to dry one hour or until tack free. Prime only the area to be covered with elastomeric membrane that day. Areas not covered with elastomeric membrane in 24 hours shall be reprimed.

11. APPLICATION: Elastomeric membrane shall be applied in strict accordance with manufacturer's recommendations. Roll elastomeric membrane onto surfaces in a manner to achieve uniform contact between surfaces and membrane without wrinkles, buckles, or air spaces. Side and end laps shall be not less than 2-1/2 inches. Roll down laps firmly and completely. Misaligned or inadequately lapped seams shall be repaired with an additional strip of elastomeric membrane. All inside and outside corners shall be double covered with elastomeric membrane by applying an initial strip of minimum 12 inch width centered along the axis of the corner. All construction and control joints shall be double covered with a 12 inch wide strip of elastomeric membrane. A trowel bead of mastic shall be applied to the perimeter of elastomeric membrane placed in any one day. Where elastomeric membrane is interrupted by a vertical surface, the membrane shall be turned up the vertical surface to a height as indicated or as recommended by materials manufacturer. Treat areas around drains or other items protruding thru membrane with a second layer of membrane extending out on protruding surface at least 12 inches and on treated surface 12 inches. Coat edges of such treatment with liberal application of mastic after second layer of membrane is applied. Protect installed membrane in accordance with manufacturer's recommendations. All elastomeric membrane shall be covered within 72 hours after application.

11.1 Horizontal Surfaces: In applying elastomeric membrane start at low points and work toward high points. Apply membrane shingle fashion so that the direction of the flow of water is over and not against laps. Where two plies are indicated, lay second ply in same manner as first ply locating laps approximately 18 inches from laps of first ply. All terminations shall be finished with a trowelled bead of mastic. Install horizontal protection board in accordance with elastomeric membrane manufacturer's recommendations.

11.2 Vertical Surfaces: Apply elastomeric membrane vertically in strips of 8 feet length or less. Upper ply shall overlap lower ply a minimum of 2-1/2 inches. All surfaces of membrane shall be completely pressed with heavy hand pressure during application; use a seam roller on the laps. At upper termination of elastomeric membrane at masonry, rake out mortar joint to a depth of one inch to form a reglet. Grout elastomeric membrane into reglet, pack reglet with lead wool and completely fill remaining portion of reglet with mastic. Install vertical protection board with mastic in accordance with elastomeric membrane manufacturer's recommendations.

independent waterproofing membrane during the manufacturing process. Board shall be 1/8 inch thick.

6.4.2 Vertical Applications: Board shall be lightweight cellular plastic board, 1 inch thick, and manufactured by elastomeric membrane manufacturer.

7. FIELD TEST AREA: A test area not less than 100 feet square comprising a typical waterproofing installation, using methods and materials, shall be installed for approval by the Contractor Quality Control representative. Location will be selected by the Contractor Quality Control representative. Waterproofing shall be visually and physically examined for adhesion and correctness of installation procedure by the manufacturer's representative and the supplier of the materials. Failure of waterproofing to bond or appearance shall be cause for disapproval of waterproofing materials and method of installation. Disapproved test area shall be cleaned free of applied waterproofing, leaving base clean and acceptable for new application. An additional test area required due to failure shall be made without cost to the Government. Waterproofing in other areas shall not proceed until installation of test area has been completed and approved by manufacturer of waterproofing materials or his representative and accepted by the Contractor Quality Control representative. Approved installation shall remain in place and open to observation as criteria for all waterproofing.

8. INSPECTION OF SURFACES: Before starting work, inspect surfaces to be waterproofed to determine that they are in satisfactory condition. Notify the Contractor Quality Control representative of any defects or conditions that will prevent a satisfactory installation. Application shall not be started until all defects and conditions have been corrected.

9. PREPARATION OF SURFACES:

9.1 Concrete Surfaces: Concrete shall be cured a minimum of 7 days and shall be dry before application of primer and elastomeric membrane. In addition, surfaces shall be smooth and free from deleterious and excess material and projections. High spots shall be cut off or ground smooth.

9.2 Expanded Polystyrene Aggregate Roof Surfaces: The surfaces shall be dry before application of primer and elastomeric membrane. In addition, surfaces shall be smooth and free from deleterious and excess material and projections. High spots shall be cut off or ground smooth.

9.3 Masonry Surfaces: Masonry joints shall be struck flush. Surfaces shall be smooth and free from deleterious and excess material and projections.

9.4 Metal Surfaces: Metal surfaces shall be clean, dry, and free from oil, grease, dust, loose paint, rust, and all other deleterious material.

Elongation - ultimate failure of rubberized asphalt (%)	300 min.	ASTM D412 (Die C) Modified
Puncture resistance - polyethylene film (in. oz. tear)(impact from sharp object)	250 min.	ASTM D781
Puncture resistance - membrane (lb.) (stretched by blunt object)	40 min.	ASTM E154
Peel adhesion (lb./in. width)		
7 days dry (70 degrees F.) +7 days @ 120 degrees F. +7 days dry (70 degrees F.)	5.0 min.	See note (2)
7 days dry (70 degrees F.) +7 days @ 120 degrees F. +7 days wet (70 degrees F.)	5.0 min.	See note (2)
Resistance to hydrostatic head (ft. of water)	75	See note (3)

(1) Membrane is applied and rolled across two primed concrete blocks with no separation between blocks. In a -15 degrees F. cabinet, blocks are pulled apart to 1/4", then returned to original position. Cycle is repeated 100 times. For joint cycling, blocks are double covered with membrane and are separated by 1", then cycled at -15 degrees F. between 3/4" and 1-1/4" a minimum of 1000 cycles.

(2) Membrane is applied to primed, dry blocks and rolled. Blocks are then stored for 7 days at each test condition. Membrane is then peeled from the concrete at a 90 degree angle.

(3) Hydrostatic head tests are performed by applying and rolling membrane on primed concrete, then sealing the waterproofed concrete to a pressure chamber. Water is introduced under pressure equivalent to 75 head feet.

6.2 Mastic: Rubberized asphalt of type recommended by elastomeric membrane manufacturer.

6.3 Concrete Primer: ASTM D41 and of type recommended by elastomeric membrane manufacturer.

6.4 Protection Board:

6.4.1 Horizontal Applications: Board shall be five or more ply semi-flexible board composed of an asphaltic core sealed under heat and pressure between two liners of asphalt-saturated kraft or felt bonded to an

(a) Elastomeric membrane waterproofing, three pieces, size 12 inches by width of roll.

(b) Two tubes of membrane manufacturer's recommended mastic.

(c) Concrete primer.

4. ENVIRONMENTAL CONDITIONS: The air and surface temperature shall be above 40 degrees F. when materials specified herein are applied.

5. DELIVERY AND STORAGE: Materials shall be delivered in bundles, rolls, and sealed containers bearing the manufacturer's original labels. Materials shall be stored in an enclosed area free from contact with soil and weather, and maintained at not less than 50 degrees F. for at least 24 hours before use. Defective and/or damaged materials shall be replaced by the Contractor at no expense to the Government.

6. MATERIALS:

6.1 Elastomeric Membrane: Membrane shall consist of a sheet of polyethylene film coated on one side with a factory applied rubberized asphalt to a controlled thickness of .060 inch, after which, a removable protective release paper is attached to the adhesive surface until elastomeric membrane is ready for use. The elastomeric membrane shall conform to the following requirements:

Property	Value	Test Method
Permeance-Perms (grains/sq. ft./hr./in. Hg.)	0.1 max.	ASTM E96 Method B
Water Absorption - 72 hrs. (% by weight)	0.25 max.	ASTM D1228
Pliability - (180 degrees bend over 1" mandrel at -25 degrees F.)	unaffected	ASTM D146
Exposure to fungi in soil - 16 weeks	unaffected	GSA PBS: 4-07121T
Cycling over crack at -15 degrees F.	no effect 100 cycles	See note (1)
Cycling over 1" joint at -15 degrees F.	no effect 1000 cycles	See note (1)
Tensile strength membrane (p.s.i.)	250 min.	ASTM D412 (Die C) Modified

SECTION 07111. ELASTOMERIC MEMBRANE WATERPROOFING

1. APPLICABLE PUBLICATIONS: The following publications of the issues listed below, but referred to thereafter by basic designation only, form a part of this specification to the extent indicated by references thereto:

1.1 American Society for Testing and Materials (ASTM) Publications:

D41-73	Primer for Use With Asphalt in Dampproofing and Waterproofing.
D146-72	Felted and Woven Fabrics Saturated with Bituminous Substances for Use in Waterproofing and Roofing.
D412-75	Rubber Properties in Tension.
D781-68(1973)	Puncture and Stiffness of Paperboard, and Corrugated and Solid Fiberboard.
D1228-64(1976)	Asphalt Insulating Siding Surfaced with Mineral Granules.
E96-66(1972)	Water Vapor Transmission of Materials in Sheet Form.
E154-68(1975)	Materials for Use as Vapor Barriers Under Concrete Slabs and as Ground Cover in Crawl Spaces.

1.2 General Services Administration (GSA) Publication:

PBS: 4-07121T-77 Elastomeric Waterproofing.

2. QUALITY CONTROL: Approvals, except those required for field installations, field applications, and field tests, shall be obtained before delivery of material or equipment to the project site.

2.1 Manufacturer's Qualifications: Manufacturer shall have his factory-trained and field-experienced representative on job site to instruct job sample installation and later to inspect on-site initial installation, and visit site periodically at least once a week as long as waterproofing work is in progress. Manufacturer's representative shall inspect substrate and direct application procedures of job sample and of first sample installation.

3. SUBMITTALS:

3.1 Test Reports and Certificates: The testing requirements incorporated in referenced documents will be waived provided the manufacturer submits certificates that previously manufactured materials have been tested by recognized laboratories, that such materials meet testing requirements specified and that the tested material is of the same type, quality, manufacture, and make as that furnished for this project. Copies of the test reports need not be submitted except as specifically requested.

3.2 Samples: Before delivery of any material to the site, the following samples, as specified, shall be submitted to and approved by the Contractor Quality Control representative:

7.5.1 Dropped Wood Ceilings: Install woodwork, oak paneling, and metal light louvers for dropped ceiling assemblies as indicated on the drawings and located on reflected ceiling plans.

7.6 Finish Carpentry Woodwork: Install exposed-to-view woodwork which is to be concealed by paint with finish nails, screws, metal devices required to securely attach members in place. Work of this nature not covered by other sections of this specification shall be included in this section.

7.6.1 Blocking and Framing: Concealed members required for attaching architectural and finish carpentry woodwork shall be anchored to the building structure with bolts, screws, metal hardware, and devices.

7.6.2 Built-In Place Items: Woodwork to be concealed with paint, including wood members at window heads, shelving, sills, bases, standing and running trim, and miscellaneous wood items shall be installed with true and neat joints, nails set and filled, cleaned, sanded and ready for painting.

7.7 Metal Brackets Supporting Counter Tops: Securely anchor to walls and space to accurate dimensions the counter brackets as indicated on the drawings. After wall installation, attach counter tops to brackets with wood screws.

7.8 Floor Track: Metal runner channels shall be recessed in floor of Chapel Chancel to accommodate the interchangeable altars which are mounted on casters.

7.9 Openings at Abutting Surfaces: Seal openings in the work between architectural woodwork items and wall surfaces due to irregularity of surfaces. Sealant shall be Type II, Class B, conforming to TT-S-00227; joints flush.

7.10 Dimensions: Job verify dimensions prior to fabrication.

7.11 Finished Condition: After architectural woodwork and finish carpentry is placed, anchored, and joined, items shall be cleaned, filled, sanded, sealed, and ready for final finishing. Repair any damage incurred prior to and during installation to like-new condition or replace at no cost to the Government. Replace damaged or chipped plastic laminate.

---END---

6.3 Wood Sealers: Architectural woodwork and paneling fabricated of oak hardwood and exposed to view shall be filled, sanded, and sealed with transparent sealer prior to delivery to job site. Concealed portions of architectural woodwork shall be shop finished with one coat of clear sealer; semi-concealed areas shall be finished to conform with AWI paragraph 1500-3.

6.4 Plastic Laminate: Plywood or particleboard concealed with plastic laminate shall be fabricated with glues and adhesives conforming to AWI requirements. Include window sills, shelves, seats, locker room panels and bases, counters, backsplashes, and other miscellaneous items covered with plastic laminate and indicated on the drawings.

6.5 Metal Parts: Metal support members and frames of shop fabricated units, "custom" woodwork and paneling may be shop or field fabricated and assembled. Metal members shall be attached to the woodwork and miscellaneous metal items shall be provided to secure units and woodwork to building structure.

6.6 Hardware: Builders' hardware shall be provided, fitted, and applied to architectural woodwork at the shop of the fabricator.

7. INSTALLATION:

7.1 Architectural Woodwork and Finish Carpentry: Woodwork indicated on the drawings and specified in this Section shall be delivered, assembled, placed, anchored, and installed at locations shown on the drawings. Include shop fabricated units, custom woodwork, flat paneling for walls and ceilings, and finish carpentry.

7.1.1 Workmanship: Woodwork shall be installed level, plumb, and true to line, and shall be attached to walls, floors or ceilings with devices as indicated.

7.2 Hardwood Wall Paneling: Oak-faced plywood wall panels, flat, shall be applied to wall surfaces with concealed mechanical fasteners and AWI recommended mastic. Vertical joints shall be butt type with edge on each panel, eased slightly.

7.3 Hardwood Ceiling Paneling: Oak-faced plywood panels, flat, installed on gypsum board drywall in certain ceiling areas shall be attached with AWI recommended mastic and chromium screws, oval head, set in chrome beveled grommet washers as required. Paint exposed edge strips flat black.

7.4 Shop Fabricated Units: "AW" items shall be placed, anchored, and attached as indicated on drawings.

7.5 Custom Architectural Woodwork: Custom shaped oak hardwood members including sills, handrails, running and standing trim, frames, bases, and miscellaneous oak items shall be installed as indicated on drawings.

brackets, pulls, locks, hinges, catches, heavy duty casters, and miscellaneous cabinet hardware items indicated on the drawings.

5.10.1 Hardware Finish: Items exposed to view shall be satin chrome finish, unless otherwise specified or indicated.

5.10.2 Hinges: Overlay hinges shall be Type B81362; and piano hinges shall be FF-H-116, Type 2174, bronze.

5.10.3 Metal Shelf Standards and Supports: Conform to requirements of ANSI A156.9; flush-mounted with chrome finish on steel; adjustable on 1/2-inch centers; two standards per jamb, 13/16-inch wide by 3/16-inch deep.

5.11 Fabric Wall Covering: Vinyl wall fabric for the interior compartments of the three altars in the Chapel shall be provided and shall conform to type and colors as indicated on the drawings.

5.12 Metal Louvers: Prefabricated light louver strips, 4 inches wide, cut to length, mitered at 90-degree corners, shall be provided in dropped wood panel ceilings as indicated on the reflected ceiling plans. Units consist of No. S-32 precision .025 thick aluminum parallel aluminum blades attached to frame; finish shall be baked enamel, white.

5.13 Motorized Conveyor: Conveyor assembly, consisting of drive motor, belts, switches, controls, rollers, and miscellaneous items shall be provided in shop fabricated unit, Item AW-24, as indicated on the drawings.

6. FABRICATION:

6.1 Architectural Woodwork: Conform with standards set forth in "Architectural Woodwork Quality Standards and Guide Specifications" published by AWI. Conform to AWI reveal overlay construction and to requirements of Section 400-3, Standards for Custom Grade.

6.1.1 Shop Fabricated Units: Items are identified by numbers preceded by the letters "AW" on the drawings, except AW-1 and AW-2, which will be furnished by the Government and installed by the Contractor. Units may be shop fabricated and assembled or shop fabricated component parts and field assembled.

6.1.2 Custom Woodwork: Shop fabricated, shaped, exposed-to-view, oak hardwood members including sills, hand rails, valances, standing and running trim, free-standing jambs, components of dropped wood ceilings, wood trim attached to light fixtures, and miscellaneous oak items indicated on drawings. Vertical and horizontal laminations permitted with color and grain match.

6.2 Finish Carpentry: Woodwork to be concealed by paint may be shop or field fabricated to required sizes and shapes.

5.5.4 Plywood Marking: Each sheet of plywood shall bear the mark of a recognized association or independent inspection agency that maintains continuing control over the quality of the plywood. The mark shall identify the plywood by species, group or identification index, glue type, grade, and compliance with PS-1.

5.5.5 Special Plywood Walls: Plywood for wall covering in Physical Therapy shall be exterior type, Grade A-A, Douglas Fir, 3/4-inch thick, Design One Eleven with grooves 2 inches on centers, and shall have fire-retardant treatment. Plywood for walls in telephone rooms and instrumentation closets shall be exterior type, Grade A-A, Douglas Fir, 1/2-inch thick, located as indicated on the drawings.

5.5.6 Framing: Concealed framing and blocking used to support or attach woodwork shall be grade marked, kiln dried lumber, preservative treated in accordance with AWPB LP-2, using water-borne salts listed in the applicable table of AWPB standard governing the particular type of treatment, ACA, CCA-Type A, CCA-Type B, or CZC salts.

5.6 Lumber and Plywood Specified To Be Preservative Treated: Each piece of preservative treated lumber or plywood shall be labeled with a permanent mark indicating conformance with the applicable AWPB standard. The label shall be an approved AWPB quality mark or that of an approved independent inspection agency that maintains continuing control, testing, and inspection over the quality of the product.

5.7 Lumber and Plywood Indicated To Be Fire-Retardant Treated: Each piece shall be marked in accordance with MIL-L-19140 or with the Underwriters' Laboratories label.

5.8 Sizes of Lumber: Sizes and surfacing of lumber shall conform to PS-20 for dressed sizes of lumber. All lumber shall be surfaced four sides. Sizes of lumber indicated on the drawings and specified herein are given by nominal sizes, unless otherwise specified or indicated. Custom shapes and milled items for shop fabricated units and custom architectural woodwork are detailed and indicated on the drawings.

5.9 Miscellaneous Metal: Metal items supporting or attached to shop fabricated units and custom architectural woodwork shall be steel shapes, cut, joined, welded, bolted, and anchored as shown on the drawings. Include metal angles, plates, tubes, channels, counter support bracket arms, frames, and miscellaneous shapes as indicated.

5.9.1 Paint on Metal Work: Metal counter support bracket arms shall be shop painted Color "A" and other metal parts painted Color "S": Use system PS-1 as identified on the "Room and Finish Schedule".

5.10 Builders' Hardware: Cabinet and builders' hardware shall conform to requirements of FF-H-111, PS-1 and PS-20, and includes shelf standards and

5.1.7 Interior Hardwood Plywood: AWI custom grade, P.S. face "premium" (A) one side and P.S. face "backing"; (A) one side for plywood exposed one side; P.S. face "premium" inside and P.S. face "good" for plywood exposed two sides. Exposed faces shall be white oak, K.D., rift cut. Match samples on display at Office of Contracting Officer.

5.2 Wall and Ceiling Paneling, Flat: Factory laminated white oak, rift cut, face veneers on one side of plywood sheets; exposed edges shall have solid hardwood oak edge.

5.2.1 Flame and Smoke Ratings: Flame spread rating not to exceed 75 and a smoke development rating not to exceed 100.

5.3 Special Paneling: Tambour panels, 12-inch wide, consisting of 3/8-inch thick red oak strips mounted vertically to flexible backing; wood on sheets prefinished and fire-retardant treatment by the manufacturer; Style No. TR-400, Forms and Surfaces.

5.4 Plastic Laminate: Plastic laminate shall conform to requirements of L-P-508, Style D, Type I, Class 1. Plastic laminate sheets shall conform to thickness, finish, type, and color as shown on the "Finish and Color Schedule", and as indicated on the drawings. Plastic laminate used for vertical wall surfaces shall have a flame spread rating not to exceed 25 and a smoke development rating not to exceed 50.

5.4.1 Glues and Adhesives: Plastic laminates applied to substrate shall conform to AWI requirements for materials and joining.

→ 5.5 Interior Finish Carpentry: Woodwork exposed to view but not classified as shop fabricated units or custom architectural woodwork, and is permanently attached to the building structure, shall be constructed of plywood or grade marked, kiln dried lumber.

5.5.1 Paint Finished Lumber: Lumber exposed to view which is to be concealed with paint shall be B and Better Douglas Fir, 8 percent moisture content, quarter-sawn.

5.5.2 Lumber Marking: Unless otherwise specified, each piece of lumber, or each bundle of small pieces of lumber, shall be identified by the grade mark of a recognized association or independent inspection agency using the specific grading requirements of the association recognized as covering the species used. Such association or independent inspection agency shall be certified by the Board of Review, American Lumber Standards Committee, to grade the species used.

5.5.3 Paint Finished Plywood: Plywood exposed to view which is to be concealed by paint shall be A-A Douglas Fir with one face unmatched Birch veneer and shall have hardwood edge strips on exposed edges.

4.3 Wood Flooring: Slat flooring is specified under section entitled "Slat Flooring".

4.4 Finishes: Natural finishes for exposed-to-view oak hardwood on shop fabricated units, oak wall paneling, base, trim, sills, aprons, frames, and miscellaneous oak wood work are described in the "Finish and Color Schedule" and provided under section entitled "Field Painting".

4.5 Painting: Paint and colors for finish carpentry woodwork exposed to view (other than natural finished oak) are described in the "Finish and Color Schedule" and provided under section entitled "Field Painting".

4.6 Metal Roll-Down Devices: Metal roll-down shutters and metal grilles are specified in sections entitled "Aluminum Dispatch Window" and "Security Grille".

4.7 Items designated as "AW-1" and "AW-2" will be furnished by the Government and installed by the Contractor. These units are category "E-2" and are described in section 11797, paragraph 7.12.

5. MATERIALS: Materials shall conform to the respective specifications and standards and to the requirements specified herein.

5.1 Architectural Woodwork: Consists of shop fabricated units and custom architectural woodwork, and shall conform to the lumber grade requirements of Section 100 of the AWI Architectural Woodwork Quality Standards for "custom" grade woodwork.

5.1.1 Solid, Unexposed Lumber Members: B and Better Douglas Fir, ICD, 8 percent moisture content, quarter-sawn.

5.1.2 Hardwood, Solid Stock, Exposed to View: White oak matching samples on display at the Office of the Contracting Officer.

5.1.3 Handrails and Sills: Lumber shall be AWI custom grade white oak for a transparent finish, K.D., 8 percent moisture content. Vertical and horizontal laminations permitted with color and grain match.

5.1.4 Standing and Running Trim: Lumber shall be AWI premium grade white oak for a transparent finish, K.D., 8 percent moisture content, without lamination.

5.1.5 Exposed Portions of Shop Fabricated Units: Lumber shall be AWI premium stock, quarter-sawn, white oak for transparent finish, made from solid lumber stock, K.D., 8 percent moisture content.

5.1.6 Plywood and Particleboard Grades: Plywood and particleboard grades shall conform to requirements of Section 200 of the AWI Architectural Woodwork Quality Standards for "custom" grade woodwork. Unexposed plywood shall be A-A Fir.

3.3.3 Control counter, Item AW-14, complete.

3.3.4 Window sill, typical patient room, 8 feet long, laminate plastic covered.

3.3.5 Samples may be used in the work, if approved, and if identified as approved samples.

3.4 Shop Drawings: Detail drawings for the following items shall be submitted to and approved by the Contracting Officer. Submit five sets of shop drawings for each item.

3.4.1 Shop Fabricated Units: Large scale fabrication and installation drawings for items identified by numbers preceded by the letters "AW", except "AW-1" and "AW-2" which will be furnished by the Government and installed by the Contractor.

3.4.2 Custom Architectural Woodwork: Large scale sections, details, and installation drawings of custom shaped hardwood members including oak sills, each type of oak hand rail, oak valances, oak trim for light fixtures, oak frames, oak standing and running trim, and other miscellaneous oak members exposed to view.

3.4.3 Dropped Wood Ceilings: Large scale detail and installation drawings of dropped wood ceilings constructed of oak members and oak veneer plywood.

3.4.4 Conveyor: Triplicate copies of manufacturer's literature for belt conveyor system included in Item AW-35, Underwriters' Laboratories labeled.

4. RELATED WORK SPECIFIED IN OTHER SECTIONS:

4.1 Service Connections to Shop Fabricated Units: Final utility connections, electric service, and instrumentation services are shown on Plumbing, Electrical, and Instrumentation drawings.

4.1.1 Electrical and Instrumentation: Devices, including wiring, junction boxes, plate covers, light fixtures, control switches, microphones, monitors, etc., shown attached or concealed in the shop fabricated units are provided on the Electrical and Instrumentation drawings.

4.1.2 Sinks: Counter sinks, except those in "AW-1" and "AW-2" including fittings, trim, piping, valves, and traps, shown recessed in counter tops are provided on the Plumbing drawings.

4.2 Metal Work: Metal brackets for attaching wood hand rails and wood valances to walls are provided under section entitled "Metal Fabrication".

1.7 Western Wood Products Association (WWPA) Publication:

Standard Grading Rules for Western Lumber, 1970 edition.

1.8 National Hardwood Lumber Association (NHLA) Publication:

Rules for the Measurement and Inspection of Hardwood and Cypress Lumber; 1971 through 1975.

1.9 Architectural Woodwork Institute (AWI) Publications:

Architectural Woodwork Quality Standards and Guide Specifications (1973).

Architectural Casework Details (1969).

1.10 American National Standards Institute (ANSI) Publication:

A156.9 Civil Engineering and Construction.

2. QUALITY CONTROL: Approvals, except those required for field installations, field applications and field tests, shall be obtained before delivery of materials to the project site.

3. SUBMITTALS:

3.1 Certificates: Certificates of compliance will be required for moisture contents of lumber and plywood. Certificates attesting that lumber or plywood meets the grade requirements specified herein may be submitted in lieu of marking surfaces of lumber or plywood with grade markings when lumber or plywood items will be installed in locations where appearance is important and grade marks will deface material.

3.1.1 Flame Spread Ratings: Certificates of compliance will be required for flame spread and smoke development ratings where required for fire-retardant treatment.

3.2 Preservative Treatment: Submit for approval certification by the preservative treatment company stating the paintability, drying time, surface deposit, and moisture content of preservative treated lumber and plywood upon shipment from the treatment plant.

3.3 Samples: Samples of the following shall be submitted to and approved prior to delivery to the site:

3.3.1 Oak hand rail, full width, 8 feet long, with one end return and one typical spliced vertical joint.

3.3.2 Typical counter top, Item AW-52, with one sample metal bracket arm support for wall mounting.

SECTION 06400. ARCHITECTURAL WOODWORK AND FINISH CARPENTRY

1. APPLICABLE PUBLICATIONS: The following publications of the issues listed below, but referred to thereafter by basic designation only, form a part of this specification to the extent indicated by references thereto:

1.1 Federal Specifications:

FF-B-588C & Am 1	Bolts, Toggle: and Expansion Sleeve, Screw.
FF-N-105B & Am 3 & Int Am 4	Nails, Brads, Staples and Spikes: Wire, Cut and Wrought.
FF-N-836D & Am 1	Nut Square, Hexagon, Cap, Slotted, Castellated, Clinch, Knurles, and Welding.
FF-S-111D	Screw, Wood.
FF-S-325 & Int Am 3	Shield, Expansion; Nail Expansion; and Nail, Drive Screw (Devices, Anchoring; Masonry).
FF-S-1362	Stud, Plain, General Purpose.
FFF-H-111C	Hardware, Builders, Shelf and Miscellaneous.
FFF-H-00116D	Hinges, Hardware, Builders.
L-P-508H	Plastic Sheet, Laminated, Decorative and Nondecorative.
TT-S-00227E (COM-NBS) & Am 3	Sealing Compound; Elastomeric Type, Two Component.

1.2 Military Specifications:

MIL-L-1940C	Lumber and Plywood, Fire-Retardant Treated.

1.3 U. S. Department of Commerce Product Standards:

PS 1-74	Construction and Industrial Plywood.
PS 20-70	American Softwood Lumber Standard.

1.4 American Wood Preservers' Bureau (AWPB) Publications:

LP-2 July 1971	Preservatives, Water-Borne Salts, ACA, CCA-Type A; CCA-Type B; or CZC.

1.5 Southern Pine Inspection Bureau (SPIB) Publications:

Grading Rules, June 1977 edition.

1.6 West Coast Lumber Inspection Bureau (WCLIB) Publications:

Standard Grading and Dressing Rules for West Coast Lumber, No. 16, September 1970 edition.

6.1.3 Diagonal Bracing: Diagonal bracing shall be provided at maximum 40-foot centers in stud walls. Bracing shall extend from top plates to sill at an angle of approximately 45 degrees and shall be double nailed at each stud. Bracing shall be fastened at each bearing with two 8 penny nails.

6.2 Wood Roof Nailers, Edge Strips, Curbs, and Cants: They shall be of the sizes and configurations indicated or specified and shall be securely anchored to contiguous construction.

6.2.1 Roof Edge Strips and Nailers: Roof edge strips and nailers shall be provided at perimeter of roof, around openings through roof, and where roofs abut walls, curbs, and other vertical surfaces. Except where indicated otherwise, nailers shall be the same thickness as the insulation.

6.2.2 Cants and Curbs: Wood cant strips and curbs shall be provided as indicated and specified.

6.3 Wood Blocking: Wood blocking shall be of proper sizes and shapes and at proper locations as necessary, for the installation and attachment of materials, fixtures, equipment, and items indicated.

6.4 Wood Grounds: Wood grounds shall be provided as necessary for fastening items to plastered ceilings. Grounds shall be installed in proper alignment and trued with an 8-foot straight edge.

6.5 Plywood: Install plywood with long dimension parallel to supports. Screw attach plywood to supports, with spacing of screws not to exceed 4-inches on centers. Edges shall abut over centerline of supports.

6.6 Hardboard: Install hardboard as indicated.

6.7 Temporary Closures: Temporary closures shall be provided with hinged doors and padlocks, and installed during construction at exterior doorways and other ground level openings that are not otherwise closed. Windows and unprotected openings shall be covered with polyethylene or other approved material, stretched on wood frames. Dustproof barrier partitions shall be provided to isolate areas as directed.

---END---

5.9.1 Bolts, Nuts, Studs, and Rivets: FF-B-575, FF-B-584, FF-N-836, and FF-S-1362.

5.9.2 Expansion Shields: FF-S-325. Except as shown otherwise, maximum size of devices in Groups IV, V, VI, VII and shall be 3/8-inch.

5.9.3 Lag Screw and Lag Bolts: FF-B-561.

5.9.4 Toggle Bolts: FF-B-588.

5.9.5 Wood Screws: FF-SS-111.

5.9.6 Wire Nails: FF-N-105.

6. INSTALLATION: Lumber and other rough carpentry shall be fitted closely, set accurately to the required lines and levels, and shall be secured in place in a rigid and substantial manner. Framing members shall not be spliced between bearing points. All members damaged by cutting or boring shall be reinforced by means of specially formed and approved sheet metal, or bar steel shapes, or removed and provided new. All members, not indicated or specified, shall be provided as necessary for the proper completion of the work. Spiking, nailing, and bolting shall be done in an approved manner; spikes, nails, and bolts shall be drawn up tight. Shimming will not be permitted.

6.1 Wall Framing:

6.1.1 Studs: Studs shall be selected for straightness and set plumb, true, and in alignment; studs shall be bridged horizontally with nominal 2 inch material of the same width as the studs; the bridging shall be installed flat. Sizes and spacing of studs shall be as indicated. Studs shall be toe-nailed to sills or sole plates, with not less than two 10 penny nails on each wide face, or fastened with metal nailing clips or connectors. Studs abutting concrete or masonry walls shall be anchored thereto near the top and bottom and at mid-height using expansion bolts.

6.1.2 Plates: Plates for partitions shall be of the same width as the studs and shall form continuous horizontal ties; single plates shall be spliced, and the ends of double plates shall be staggered. Sole plates shall be doubled, built up of two nominal 2 inch thick members. Top plates shall be single of the same size as the studs. Lower members of doubled top plates and single top plates shall be nailed to each stud and corner post with two 16 penny nails. The upper members of doubled plates shall be nailed to the lower members with 10 penny nails, two near each end and staggered 16 inches on centers intermediately between. Sole plates on concrete shall be anchored with expansion bolts, one near each end and at not more than 6 feet on centers.

NELMA Standard grading rules	Balsam Fir Eastern Hemlock-Tamarack Eastern Spruce Eastern White Pine Northern Pine Northern White Cedar	All Species: Standard Light Framing or No. 4 Structural Light Framing (Stud grade for 2 x 4 size, 10 feet or shorter)
NHPMA Official grading rules	Aspen Balsam Fir Eastern Hemlock-Tamarack Eastern Spruce Eastern White Pine Northern Pine	All Species: Standard Light Framing or No. 3 Structural Light Framing (Stud grade for 2 x 4 size, 10 feet or shorter)
RIS standard specifications	Redwood	All Species: Standard Light Framing or No. 3 Structural Light Framing (Stud grade for 2 x 4 size, 10 feet or shorter)
NHLA rules for the measurement and inspection of hardwood and cypress lumber	Cypress	No. 2 Dim.

5.7 Plywood PS 1, Appearance Grade, Exterior Type, AD Veneer Grade, Group 1, and identified with APA grade-trademark of the American Plywood Association.

5.8 Hardboard: LLL-B-810, Type I, Surface 1, Finish B, Design a.

5.9 Rough Hardware: Unless otherwise indicated or specified, shall be of the size necessary for the project requirements. Sizes, types and spacing of fastenings of manufactured building materials shall be as recommended by the product manufacturer unless otherwise indicated or specified. Rough hardware exposed to the weather or embedded in or in contact with exterior masonry or concrete walls or slabs shall be zinc coated. Aluminum alloys, including nails or other penetrating fasteners, shall not be used in contact with wood treated with wood preservatives.

Table of Grades for Framing Lumber

Grading Rules	Species	Lumber
WWPA standard grading rules	Aspen Douglas Fir-Larch Douglas Fir South Englemann Spruce - Lodgepole Pine Englemann Spruce Hem-Fir Idaho White Pine Lodgepole Pine Mountain Hemlock Mountain Hemlock-Hem-Fir Ponderosa Pine-Sugar Pine Ponderosa Pine-Lodgepole Pine Subalpine Fir White Woods Western Woods Western Cedars Western Hemlock	All species: Standard Light Framing or No. 3 Structural Light Framing (Stud grade for 2 x 4 size, 10 feet and shorter)
WCLIB standard grading rules	Douglas Fir-Larch Hem-Fir Mountain Hemlock Sitka Spruce Western Cedars Western Hemlock	All Species: Standard Light Framing or No. 3 Structural Light Framing (Stud grade for 2 x 4 size, 10 feet and shorter)
SPIB grading rules	Southern Pine	Standard Light Framing or No. 3 Structural Light Framing (Stud grade for 2 x 4 size, 10 feet and shorter)
SCMA Standard specifications	Cypress	No. 2 Common

5.1.5 Hardboard: Each sheet shall bear marking or statement identifying the standard under which the material is produced and the identity of the producer.

5.2 Sizes of Lumber: Sizes and surfacing of lumber shall conform to PS20 for dressed sizes of lumber. All lumber shall be surfaced four sides. Sizes of lumber indicated on the drawings and specified herein are given by nominal sizes, unless otherwise specified or indicated.

5.3 Moisture Content: The moisture content of lumber at the time of delivery to the job site shall be as follows:

(1) Lumber 2 inches and less in thickness: 19 percent maximum.

(2) Treated lumber over 2 inches thick: 25 percent maximum.

5.4 Preservative Treatment: All lumber and plywood, except where indicated to be fire-retardant treated, shall be pressure preservative treated in accordance with AWPB LP-2. Treatment shall be applied to properly seasoned lumber only and treatment for plywood and lumber to receive paint or other finish shall be such as to cause no adverse affects on the ability of the surface to receive the finish specified. Wood treated with water-borne preservatives shall be air seasoned or kiln-dried after treatment to a maximum moisture content as noted hereinbefore. Certification by the preservative treatment company shall be furnished; the certificate shall certify that the moisture contents specified have not been exceeded upon shipment from the treatment plant. Items of all-heart material of Cedar, Cypress, Maple, or Redwood will not require preservative treatment.

5.4.1 Preservatives: Preservatives shall be water-borne salts ACA, CCA - Type A, CCA - Type B or CZC listed in the table of the applicable AWPB standard governing the particular type of treatment.

5.4.2 Pressure Treatment: Treatment shall be in accordance with AWPB Standard LP-2. Only one of the following salt formulations may be used: ACA: CCA - Type A; CCA - Type B; or CZC.

5.5 Fire-retardant Treatment: Carpentry items, where indicated, shall be fire-retardant treated in accordance with MIL-L-19140. The Underwriters' Laboratories, Inc. label will be accepted as evidence of conformance to the fire retardance requirements of MIL-L-19140.

5.6 Lumber: Lumber shall be one of the species listed in the table below. Minimum grade of species shall be as listed.

3.1.1 Preservative Treatment: Submit for approval certification by the preservative treatment company, stating the paintability, drying time, surface deposit, and moisture content of preservative treated lumber and plywood upon shipment from the treatment plant.

3.2 Samples: Samples of the following shall be submitted to and approved prior to delivery to the site:

a. Rough Hardware: One item of each kind; except nails, screws, fasteners and the like, two of each kind.

b. Hardboard: One unit, 6-inches by 6-inches.

c. Plywood: One unit, 6-inches by 6-inches.

4. DELIVERY AND STORAGE: Materials shall be delivered to the site in an undamaged condition. Materials shall be carefully stored off the ground to provide proper ventilation, drainage, and protection against dampness. Defective and/or damaged materials shall be replaced by the Contractor at no expense to the Government.

5. MATERIALS: Materials shall conform to the respective specifications and standards and to the requirements specified herein.

5.1 Grading and Marking:

5.1.1 Lumber: Unless otherwise specified, each piece of lumber, or each bundle of small pieces of lumber, shall be identified by the grade mark of a recognized association or independent inspection agency using the specific grading requirements of the association recognized as covering the species used. Such association or independent inspection agency shall be certified by the Board of Review, American Lumber Standards Committee, to grade the species use.

5.1.2 Plywood: Each sheet on plywood shall bear the mark of a recognized association or independent inspection agency that maintains continuing control over the quality of the plywood. The mark shall identify the plywood by species, group or identification index, glue type, grade, and compliance with PS 1.

5.1.3 Lumber and Plywood Specified To Be Preservative Treated: Each piece of preservative treated lumber or plywood shall be labeled with a permanent mark indicating conformance with the applicable AWPB standard. The label shall be an approved AWPB quality mark or that of an approved independent inspection agency that maintains continuing control, testing, and inspection over the quality of the product.

5.1.4 Lumber and Plywood Indicated To Be Fire-retardant Treated: Each piece shall be marked in accordance with MIL-L-19140.

1.6 Northern Hardwood and Pine Manufacturers Association (NHPMA) Publications:

Official Grading Rules for Eastern White Pine, Norway Pine, Jack Pine, Eastern Spruce, Balsam Fir, Eastern Hemlock, and Tamarack, September 1970.

1.7 Redwood Inspection Service (RIS) Publications:

Standard Specifications for Grades of California Redwood Lumber, November 1970 edition.

1.8 Southern Cypress Manufacturers Association (SCMA) Publications:

Standard Specifications for Grades of Tidewater Red Cypress, April 1958 edition, reprinted June 1964.

1.9 Southern Pine Inspection Bureau (SPIB) Publications:

Grading Rules, June 1977 edition.

1.10 West Coast Lumber Inspection Bureau (WCLIB) Publications:

Standard Grading and Dressing Rules for West Coast Lumber, No. 16, September 1970 edition.

1.11 Western Wood Products Association (WWPA) Publication:

Standard Grading Rules for Western Lumber, 1970 edition.

1.12 National Hardwood Lumber Association (NHLA) Publications:

Rules for the Measurement and Inspection of Hardwood and Cypress Lumber; 1971 through 1975.

2. QUALITY CONTROL: Approvals, except those required for field installations, field applications and field tests, shall be obtained before delivery of materials to the project site.

3. SUBMITTALS:

3.1 Certificates: Certificates of compliance will be required for moisture contents of lumber and plywood. Certificates attesting that lumber or plywood meets the grade requirements specified herein may be submitted in lieu of marking surfaces of lumber or plywood with grade markings when lumber or plywood items will be installed in locations where appearance is important and grademarks will deface material.

SECTION 06100. ROUGH CARPENTRY

1. APPLICABLE PUBLICATIONS: The following publications of the issues listed below, but referred to thereafter by basic designation only, form a part of this specification to the extent indicated by the references thereto:

1.1 Federal Specifications:

FF-B-561C	Bolts, Lag.
FF-B-575C	Bolts, Hexagon and Square.
FF-B-584E	Bolt, Finned Neck, Key Head, Machine, Ribbed Neck, Square Neck, Tee Head.
FF-B-588C & Am 1	Bolts, Toggle: and Expansion Sleeve, Screw.
FF-N-105B & Am 3	Brads, Staples, and Spikes, Wire, Cut and Wrought.
FF-N-836D & Am 1	Nut Square, Hexagon, Cap, Slotted, Castellated, Clinch, Knurled, and Welding.
FF-S-111D	Screw, Wood.
FF-S-325 & Int Am 3	Shield, Expansion; Nail Expansion; and Nail, Drive Screw (Devices, Anchoring; Masonry).
FF-S-1362	Stud, Plain, General Purpose.
LLL-B-810	Building Board, (Hardboard) Hard Pressed, Vegetable Fiber.

1.2 Military Specifications:

MIL-L-19140C	Lumber and Plywood, Fire-retardant Treated.

1.3 U.S. Department of Commerce Product Standards:

PS 1-74	Construction and Industrial Plywood.
PS 20-70	American Softwood Lumber Standard.

1.4 American Wood Preservers' Bureau (AWPB) Publications:

LP-2, Jul 1971	Standard for Softwood Lumber, Timber, and Plywood Pressure Treated with Waterborne Preservatives for Above Ground Use.

1.5 Northeastern Lumber Manufacturers Association (NELMA) Publications:

Standard Grading Rules for Northeastern Lumber, September 1970.

High temperature recovery, 70 hr. at 212 degrees F. 50% deflection, min.	85%	D2628

5.5.2 Adhesive: Physical properties of adhesive shall be as specified in paragraph number 5.3.2 and entitled "Adhesive".

5.5.3 Splicing Adhesive: Splicing adhesive shall be as specified in paragraph 5.3.4 and entitled "Splicing Adhesive".

5.6 Type M Expansion Joint: Indicated on drawings as "Type M". Splices shall be vulcanized at factory to form a continuous seal. Field splices not permitted.

5.6.1 Strip Seal: Neoprene strip seal physical properties shall be as specified in paragraph number 5.5.1 and entitled "Compression Seal".

5.6.2 Adhesive: Physical properties of adhesive shall be as specified in paragraph number 5.3.2 and entitled "Adhesive".

5.6.3 Aluminum Retainer: Retainer shall be extruded from 6061-T6 aluminum alloy conforming to ASTM B221. Surfaces in contact with strip seal shall be treated to assure adhesion of seal to aluminum. All surfaces which will come in contact with concrete, mortar, grout, or masonry shall receive a coat of zinc chromate primer conforming to TT-P-645.

5.6.4 Anchors: Type recommended by strip seal manufacturer with finish to match aluminum retainer.

6. FINISH: Exposed aluminum surfaces of "Type G", "Type H", "Type J", "Type K", and "Type M" expansion joints shall have a AA-M10-C22-A42 color anodized finish in accordance with the requirements of NAAMM's "Metal Finishes Manual". Finish color shall be black. Finish shall match in appearance or fall within the two extremes of color range of the approved samples.

7. INSTALLATION: All expansion joints shall be installed in strict accordance with manufacturer's recommended standard installation procedures and approved shop drawings. All surfaces to receive seals shall be free of dirt, water, oil, rust or any other foreign matter that would prove detrimental to the effectiveness of the seal or sealing system. Apply adhesive to a wet film thickness of 20 mils where adhesive is required. While adhesive is wet, install seal in one pass using the hand or power driven tools recommended by the joint manufacturer. If stretching of the seal during installation is unavoidable, then the stretch shall not exceed 5 percent. Any installed seal that shows more than 5 percent stretch shall be replaced. Any expansion joint that is damaged during installation shall be removed and a new expansion joint installed at no additional cost to the Government.

---END---

5.4.1 Cover Plate: Extruded from 6063-T5 aluminum alloy conforming to ASTM B221.

5.4.2 Anchorage: Tempered stainless steel spring clips locked into cover plate with clips designed to lock into recess of void material.

5.4.3 Seals: Covers shall be equipped with PVC seals to contact face of surface on each side of void to prevent marring of wall and ceiling surfaces.

5.5 Type L Expansion Joint: Indicated on drawings as "Type L". Splices shall be made at factory to form a continuous seal. Field splices not permitted.

5.5.1 Compression Seal: Neoprene compression seal shall have the following physical properties:

Property	Requirements	ASTM Method
Tensile strength, min. psi.	2000	D412
Elongation at break, min. percent	250	D412
Hardness, Type A durometer	55±5	D2240 (Modified)
Compression set, 70 hr. at 212 degrees F, max.	40%	D395 method B
Oven aging, 70 hr. at 212 degrees F		
Tensile strength, loss, max.	20%	D573
Elongation, loss, max.	20%	
Hardness, Type A durometer (point change)	0 to + 10	
Ozone resistance 20 per cent strain, 300 pphm, in air at 104 degrees F (wiped with toluene to remove contamination)	No cracks	D1149
Oil swell, ASTM oil 3, 70 hr at 212 degrees F. weight change, max.	45%	
Low temperature recovery, 72 hr. at 14 degrees F. 50% deflection, min.	88%	D2628
Low temperature recovery, 22 hr. at -20 degrees F. 50% deflection, min.	83%	D2628

Hardness, Type A durometer	60±7	D2240 (Modified)
Compression set, 70 hr. at 212 degrees F, max.	40%	D395 method B (Modified)
Oven aging, 70 hr. at 212 degrees F		
Tensile strength, loss, max.	20%	D573
Elongation, loss, max.	20%	
Hardness, Type A durometer (points change)	0 to +10	
Ozone resistance 20 percent strain, 300 pphm, in air at 104 degrees F (wiped with toluene to remove contamination)	No cracks	D1149
Oil swell, ASTM oil 3, 70 hr at 212 degrees weight change, max.	45%	

5.3.2 Adhesive: Adhesive shall be a one-part moisture cure polyurethane and hydrocarbon solvent mixture with the following physical properties:

Average weight per gallon	8 ± 10%
Solids content	65%
Adhesive to remain fluid from	5 degrees F to 120 degrees F
Film strength (ASTM D412)	200 psi
Elongation	250%

5.3.3 Edge Channel Lock: Edge channel lock shall be extruded from 6061-T6 aluminum alloy conforming to ASTM B221. Surfaces in contact with compartmented seal shall be treated to assure adhesion of seal to aluminum. All surfaces which will come in contact with concrete, mortar, grout, or masonry shall receive a coat of zinc chromate primer conforming to TT-P-645.

5.3.4 Splicing Adhesive: Splicing adhesive shall be a one component adhesive composed of alpha zyanoacrylate momer in a liquid state as recommended by compartmented seal manufacturer.

5.3.5 Anchors: Type recommended by compartmented seal manufacturer with finish to match edge channel lock.

5.4 Types G, H, J, and K Expansion Joints: Indicated on drawings as "Type G", "Type H", "Type J", and "Type K".

grout. Anchor retainers shall be recessed into sub-channel to accommodate insertion of anchor bolt or other types of through web fastening into slab base. Sub-channels shall be of "U" channel shape to act as moisture barrier and carrier. All "Type D" systems shall accommodate various floor finishes.

5.1.1 Aluminum: Extruded from 6063-T5 mill finish aluminum alloy conforming to ASTM B221.

5.1.2 Filler Strips: Extruded PVC.

5.1.3 Filler: Preformed polyethylene flexible board of low density capable of 80 percent compression and 96 percent recovery all without extruding for filler strip support.

5.1.4 Anchors: Cadmium plated steel bolt type anchors fixed in race way, or lead shield type anchors through web of sub-channels.

5.2 Type E Expansion Joints: Indicated on drawings as "Type E". System shall be a balanced system capable of taking horizontal movement on each side of void and accommodate 1/2 inch movement 90 degrees to void. Systems shall consist of stainless steel sub-channels mounted on each side of void, and to receive a floating member consisting of sandwich panel with asbestos-cement board core encased within a stainless steel case. Total of thickness of panel not less than 1/4 inch. Panel shall be free floating over sub-channels and held in place by stainless steel cover plates matching sub-channels with all component parts locked together with stainless steel screws.

5.2.1 Stainless Steel: Stainless steel shall be Type 304 conforming to ASTM A167 with exposed surfaces having a No. 3 finish in accordance with ASTM A480.

5.2.2 Asbestos-cement Board: ASTM C220.

5.2.3 Anchors: Cadmium plated steel bolt type.

5.3 Type F Expansion Joint: Indicated on drawings as "Type F". Splices shall be made at factory to form a continuous seal. Field splices not permitted.

5.3.1 Compartmented Seal: Neoprene compartmented multi-celled seal shall have the following physical properties:

Property	Requirements	ASTM Method
Tensile strength, min. psi.	2000	D412
Elongation at break, min. percent	250	D412

results as materials formulated in accordance with the referenced specification"; "equal or exceed the service and performance of the specified material". The certificate should simply state that the product conforms to all requirements specified.

SAMPLE CERTIFICATE

The manufacturer hereby certifies that all following products being furnished for this project conform to all requirements of the project specifications and the respective reference specifications:

MANUFACTURER AND PRODUCT	REFERENCE SPECIFICATION
John Doe Company Extruded Aluminum	ASTM B221

SIGNATURE AND TITLE

3.2 Shop Drawings: Shop drawings on each type of expansion joint shall be submitted to and approved by the Contracting Officer before work is started. Shop drawings shall show sizes, locations, metal gages or thicknesses, hardware provisions, installation details, and other details of construction.

3.3 Samples: Two samples of each type of expansion joint shall be submitted to and approved by the Contracting Officer before work is started.

3.4 Manufacturer's Installation Procedures: Current copies of manufacturer's recommended standard installation procedures for each type of expansion joint shall be submitted to and approved by the Contracting Officer before work is started.

4. DELIVERY AND STORAGE: When condition requires that expansion joints be delivered and stored at the site, the materials shall be delivered in unopened containers. The containers shall be clearly labeled with the manufacturer's name and container contents. All materials shall be stored in a safe, dry and clean location. Containers shall not be opened until contents are needed for installation. Handling and installation of all materials shall be in a manner that will protect them from damage.

5. MATERIALS:

5.1 Types A, B, C and D Expansion Joints: Indicated on drawings as "Type A", "Type B", "Type C", and "Type D". All surfaces which will come in contact with concrete, mortar, grout, or masonry shall receive a coat of zinc chromate primer conforming to TT-P-645. Balanced system shall provide for movement directly over the void with movement accommodated on each side of void. Systems shall be equipped with one filler strip and accommodate not less than 5/8 inch vertical movement. Sub-channels shall be of flat surface to accommodate either wet installation procedures or set to level bed of

SECTION 05810. PREFABRICATED EXPANSION JOINTS

1. APPLICABLE PUBLICATIONS: The following publications of the issues listed below, but referred to thereafter by basic designation only, form a part of this specification to the extent indicated by the references thereto:

1.1 Federal Specification:

TT-P-645	Primer, Paint, Zinc-chromate, Alkyd Type.

1.2 American Society for Testing and Materials (ASTM) Publications:

A167-74	Stainless and Heat-resisting Chromium-nickel Steel Plate, Sheet, and Strip.
A480-75	Flat-rolled Stainless and Heat-resisting Steel Plate, Sheet, and Strip.
B221-76a	Aluminum-alloy Extruded Bars, Rods, Wire, Shapes, and Tubes.
C220-74	Flat Asbestos-Cement Sheets.
D395-69(1975)	Rubber Property - Compression Set.
D412-75	Rubber Properties in Tension.
D573-67(1972)	Rubber Deterioration in an Air Oven.
D1149-64(1970)	Rubber Deterioration - Surface Ozone Cracking in a Chamber (Flat Specimens).
D2240-75	Rubber Property - Durometer Hardness.
D2628-69(1976)	Preformed Polychloroprene Elastomeric Joint Seals for Concrete Pavements.

1.3 National Association of Architectural Metal Manufacturer's (NAAMM):

Metal Finishes Manual (Finish Designation), August 1969.

2. QUALITY CONTROL: Approvals, except those required for field installation, field application and field tests, shall be obtained before delivery of materials to the project site.

3. SUBMITTALS:

3.1 Tests and Certificates: The testing requirements for materials incorporated in referenced documents will be waived provided the Contractor submits certificates from the manufacturer stating that materials furnished for this project conform to all requirements of this specification and the referenced documents. Material certificates shall be submitted to and approved by the Contracting Officer. Copies of the test reports need not be submitted except as specifically requested by the Contracting Officer.

3.1.1 Sample Certificate: The certificate shall not contain statements that could be interpreted to imply that the product does not meet all requirements specified, such as "as good as"; "achieve the same end use and

lock automatically in that position. A vinyl grip handle shall be provided to release the cover for closing. Doors shall be built for a minimum live load of 150 pounds per square foot and equipped with a snap lock and removable handle. Hardware shall be cadmium plated. Door and frames shall be galvanized in accordance with ASTM A123.

7.23.2 Aluminum: Frame shall be 1/4 inch thick extruded aluminum with built-in neoprene cushion and with strap anchors bolted to exterior. Door leaf shall be 1/4 inch thick aluminum diamond plate reinforced with aluminum stiffeners as required. Cast steel hinges shall be bolted to underside and pivot on torsion bars that counterbalance the door for easy operation. The door shall open to 90 degrees and lock automatically in that position. A vinyl grip handle shall be provided to release the cover for closing. Doors shall be built to withstand a live load of 150 pounds per square foot, and equipped with a snap lock and removable handle. Aluminum shall have mill finish. Bituminous coating shall be applied to exterior of frame by manufacturer. Hardware shall be cadmium plated.

7.24 Beacon Light and Remote Cooler Supports: Supports shall be fabricated as indicated. Steel pipe shall conform to ASTM A53 and steel plates shall conform to ASTM A36. Welding shall conform to AWS D1.1. Fabricate flashing from 12 gage sheet steel. Clamping band shall be 1/4 inch by 1-1/2 inch bar fabricated from ASTM A36 steel. Clamping bolt shall be 3/8-inch diameter hex head machine bolt. Weld joint in flashing and clean welds by chipping or wire brushing.

---END---

7.14 Trench covers and frames shall be fabricated of gray iron castings, complete with anchors required for anchoring to concrete.

7.15 Straps for tanks shall consist of carbon steel straps and rods, with adjustment by means of turnbuckles.

7.16 Fiberglass grating shall be manufactured of a chemical grade polyester resin reinforced with continuous glass fibers. Grating shall be constructed to provide complete wetting of the glass fibers. Grating shall be translucent to enable inspection for defects, air bubbles and thorough glass wetting.

7.17 Safety nosings shall be of cast aluminum not less than 5/16 inch thick with an abrasive aggregate cast integral with the wearing surface. Nosings shall be not less than 4 inches wide, 6 inches wide where indicated, and shall extend the length of each step tread, landing and floor edge or as indicated. Suitable anchors, spaced not more than 15 inches on centers, shall be provided to secure the nosings to the supporting construction.

7.18 Loose Lintels: Provide structural steel loose lintels over openings in masonry walls and partitions as indicated and to support wall loads over openings for heating and ventilating ducts and other openings. Lintels shall be complete with connections, fasteners and/or welds. Lintels shall be constructed to have a minimum of 8 inches bearing on masonry at each end, except as indicated otherwise.

7.19 Steel floor plate shall conform to Class 1 of QQ-F-461. Pattern shall be optional with the manufacturer, unless otherwise indicated.

7.20 Miscellaneous plates and shapes such as angles, channels, beams, bars, miscellaneous mountings, shall be provided to complete the work and shall conform to ASTM A36. C1015 cold drawn steel, ASTM A108, automatic weld type studs shall be provided and angles, plates and shapes where indicated.

7.21 Removable steel plate in floor shall be fabricated to sizes and shapes indicated. Provide lifting handles of smooth round bar as detailed. Insulation between floor plates shall be as specified under section entitled "Ceiling and Wall Insulation".

7.22 Curb Cap: Fabricate curb cap from 16 gage Type 304 stainless steel conforming to ASTM A167 with No. 4 finish conforming to ASTM A480. Provide stainless steel fasteners as indicated.

7.23 Floor Access Doors:

7.23.1 Steel: Angle frame shall be 1/4 inch steel with strap anchors bolted to the exterior. Door leaf shall be 1/4 inch steel diamond pattern plate with cast steel hinges bolted to the underside and shall pivot on torsion bars for ease of operation. The door shall open to 90 degrees and

(a) Steel pipe railings shall be fabricated from standard-weight black steel pipe, zinc-coated where indicated, having a nominal inside diameter as indicated. Assemblies shall be shop primed for paint finish.

7.9.2 Ornamental railings shall conform to the details shown and shall be complete with all accessories and fastenings for a complete installation.

(a) Ferrous metal components shall be of malleable iron or carbon steel as standard with the manufacturer. Cast iron will be permitted for decorative elements only. Finish of ferrous metal parts shall be smooth unless indicated otherwise and shall be prime coated for enamel finish.

(b) Extruded aluminum components shall be alloy 6063 T5 or T6 as standard with the manufacturer. Cast aluminum parts shall be alloy 214 and aluminum sheet shall be alloy 5005. Exposed surfaces of aluminum shall be given a satin finish and a clear anodic coating having a minimum thickness of .0008 inch.

7.10 Aluminum brackets for attaching wood handrails to walls shall be alloy 6063 T5 or T6 extruded aluminum or alloy 214 cast aluminum. Bolt holes for anchoring brackets to walls shall be countersunk for flush mounting of handrails. Holes to receive handrail bolts shall be drilled and tapped to receive machine bolts and shall be aligned with handrail bolt holes.

7.10.1 Aluminum brackets shall have a AA-M10-C22-A42 color anodized finish in accordance with the requirements of NAAMM's "Metal Finishes Manual". Finish color shall be black. Finish shall match in appearance or fall within the two extremes of color range of the approved samples.

7.11 Brackets for gas cylinders shall consist of structural steel wall brackets, eye bolts conforming to ASTM A489, Type 1, and No. 1 straight link machine chains. Chains shall be equipped with spring clasps on one end for attaching to eye bolts.

7.12 Supports for X-ray machines shall consist of steel channels, fittings and bolts designed to withstand a load of 70 pounds per square foot. Channels shall be cold formed from low carbon steel strip. Fittings shall be punch press made from hot rolled, pickled and oiled steel plates or strip. Spring-mounted gripping nuts and steel screws shall be carbon steel conforming to ASTM A307. Track covers shall be stainless steel. All items shall be galvanized by the hot-dip process.

7.13 Access panels in walls shall be flush type, fabricated of carbon steel sheet, 16 gage for frames and 14 gage for doors. Doors shall operate on concealed spring hinges which will allow doors to open to 175 degrees. Doors shall be locked with flush, screwdriver operated locks with case-hardened steel cam. A removable access panel not less than 12 inches by 12 inches shall be installed directly below each valve, flow indicator, damper, air splitter, etc. that is located above the ceiling or in the wall, and that would otherwise not be accessible.

bolts for traction hooks shall be chrome plated and shall conform to ASTM A489, Type 1.

7.6 Steel Stairs: Steel stairs, including stringers, brackets, and reinforcing shapes, shall be of structural steel, reinforced properly and in a manner to provide rigid construction, and shall be of welded construction except that rivets or bolts may be used where welding is not practicable; screw or screw-type connections will not be permitted. Riveting or bolting shall be done accurately and neatly with concealed or flush heads where practicable; bolts shall be provided with lock nuts or washers. Stairs shall be designed to sustain safely a live load of 100 pounds per square foot in addition to the dead loads of the construction, except that pan type stair landings shall be designed to sustain safely a minimum live load of 150 pounds per square foot in addition to the dead loads of the construction. Unless otherwise indicated, floor landings shall be poured in place concrete. ~~Risers following shapes~~: "Risers, subtreads, and subplatforms for pan type stairs shall be fabricated from 12 gage (0.1046-inch) carbon steel sheets, and subplatforms shall be reinforced with structural steel shapes." ~~shapes~~. Concrete fill for subtreads and subplatforms at pan type stairs is specified in section entitled "Cast In Place Concrete". Treads and platforms at steel stairs other than pan type stairs, shall be fabricated from steel floor plate conforming to Specification QQ-F-461, Class 1 with integral safety nosing and steel floor grating Type I or Type II of Specification RR-G-661 with integral safety nosing and banding bars. Handrails for steel stairs shall be as specified elsewhere herein and shall be anchored as indicated. All brackets, hangers, anchors, bolts, and other accessories necessary for a complete installation shall be provided.

7.7 Steel floor gratings shall be Type 1 or Type II of RR-G-661 and shall have zinc-coated finish exterior and painted finish interior. Shop prime coat shall be as specified hereinbefore. End banding bars shall be provided unless indicated otherwise. Provide safety nosings for step treads.

7.8 Ladders shall be constructed of structural steel as indicated. Exposed ends of rungs shall be finished smooth. Brackets as indicated shall be provided at intervals not to exceed 10 feet and to secure a rigid installation with the centers of the rungs not less than 7 inches from the adjacent construction. Ladder assemblies shall be securely anchored to the supporting construction. All ladders shall conform to the requirements for Fixed Ladders, Article 1910.27 of the Occupational Safety and Health Act.

7.9 Railings shall be of the types, materials and construction indicated or specified and shall be in one length for each run where practicable. Fixed railings shall be securely anchored to the supporting construction.

7.9.1 Pipe railings shall be of the configurations indicated with flush welded joints. Railings shall be complete with standards, brackets, caps, plugs and all other accessories and fastenings necessary for a complete installation.

mortar, shall be shop primed with one coat of zinc chromate primer conforming to TT-P-645. Nonferrous metal surfaces shall be protected by plating, anodic, organic or other coatings as specified herein. Where surfaces of dissimilar metals are contiguous or metals are in contact with an absorptive material such as wood, masonry, concrete stucco, or plaster, they shall be given a heavy brush coat of bituminous paint conforming to TT-V-51 or separated by a non-absorptive tape or gasket. Zinc chromate primer, conforming to TT-P-645, may be substituted for bituminous coating.

7. DETAIL REQUIREMENTS:

7.1 Fastenings: Anchors and bolts, in addition to those indicated, shall be provided where required for securing the work in place. Sizes, types and spacings of anchors and bolts not indicated or specified otherwise shall be suitable for their purposes. Anchors and bolts in contact with ferrous metal shall be of zinc-coated steel and those adjacent to nonferrous metals shall be of the same or approved metals compatible with the material which they adjoin. All fastenings shall be concealed where practicable. Where exposed in finished surfaces, rivets, bolt and screw heads shall be Phillips slot, oval type, unless otherwise shown, specified or approved. Standard bolts and screws shall be used for attachment of work to structure. Where hollow concrete masonry units make the use of expansion bolts unsuitable, provide toggle bolts or other suitable fastening devices as approved. Wood plugs shall not be used in any material.

7.2 Inserts and Sleeves: Inserts of suitable and approved types shall be provided for the support or anchorage of equipment and finish construction. Inserts shall be gray or malleable iron castings or of galvanized steel unless indicated or specified otherwise. Sleeves required for the passage of pipes through concrete or masonry construction shall be standard weight zinc-coated steel pipe. Provide welded anchor plate where indicated.

7.3 Frames for doors and other openings where indicated shall be constructed of structural steel as shown. Jambs shall be fitted accurately to the head and reinforced with clip angles on the concealed surfaces. Joints shall be welded along their entire length and exposed rivets or screw heads shall be countersunk flush with the adjacent surface. Exposed edges of frame components shall be smooth and frames shall be securely anchored to the supporting construction with 2-inch by 3/16-inch steel straps spaced not more than 3 feet on centers along the jambs. Frames shall be tapped for the attachment of collateral materials and equipment and shall be reinforced to develop the full strength of the machine bolt or screw threads.

7.4 Reinforcement for pressed metal door frames shall be fabricated of structural steel as indicated, complete with anchors as required for attachment to structure.

7.5 Supports for surgical lights, traction hooks (ME-19), I.V. tracks, medical gas columns, monorails, and pulleys shall be fabricated of structural steel as indicated, complete with all required anchors and fasteners. Eye

All work shall be fabricated to allow for expansion and contraction of materials. Welding and brazing shall be of adequate strength and durability, with tight, flush joints, dressed smooth and clean. Build anchors and other connecting members which occur in concrete or masonry into the concrete or masonry as the work progresses, so as to avoid unnecessary cutting and drilling. Cut, fit and drill so that all materials are properly set in place and so as to permit engaging work to be properly installed.

5.2 Connections: Connections shall conform to the Minimum Standard Connections as indicated in AISC's "Steel Construction Manual", except as indicated or specified otherwise. When such standards are not applicable, all joints shall be continuous along entire line of contact, except where spot welding is indicated or permitted. Where exposed, welds shall be ground smooth; where bolted or riveted connections are indicated, such connections may be welded at the Contractor's option, but welds must be ground perfectly smooth. Threaded connections shall be made up tight so that threads are entirely concealed. Bolted work shall be made up tight and the threads nicked or the stem bushed to prevent loosening. Abutting bars shall be shouldered and headed, dowelled and pinned. Rivet, bolt and screw heads shall be flat and countersunk in exposed work and elsewhere as required. Removable members shall be carefully machined, fitted and secured by means of screws or bolts of proper size and approved spacing.

6. MATERIALS: Gages shown, indicated or specified herein are U.S. Standard for ferrous metals, and Brown and Sharp for nonferrous metals. Gages and thicknesses of material indicated or specified are minimum. Unless specified otherwise, materials shall be in accordance with the following specifications and standards as applicable:

Material	Specification
Structural steel - plates, shapes and tubes	ASTM A36
Carbon steel - bars, hot rolled	ASTM A576
Carbon steel - sheets and strips	QQ-S-698
Steel pipe - welded and seamless	ASTM A53
Steel castings	QQ-S-681, Class 65 - 35 or 70 - 36
Gray iron castings	QQ-I-652, Class 20
Malleable iron castings	QQ-I-666, Grade IG or II
Aluminum alloy - extruded bars, shapes and tubes	QQ-A-200
Aluminum alloy - plates and sheets	QQ-A-250
Aluminum alloy castings	QQ-A-601
Plain bolts, nuts and washers	ASTM A307
Anchor bolts (with heavy hex nut and washer)	ASTM A307
Welding electrodes	AISC Table 1.5.3

6.1 Protective Coatings: All surfaces of ferrous metal, except zinc-coated and plated work and those surfaces to be embedded in concrete or

(o) Steel Floor Plate.
(p) Curb Cap.
(q) Floor Access Door.
(r) Beacon Light and Remote Cooler Supports.

3.4 Samples: The following samples shall be submitted for approval:

(a) Two six-inch long samples of aluminum brackets for wood handrails with specified finish.

(b) Two six-inch long samples of aluminum handrails with specified finish.

3.5 Design Calculations: Design calculations on supports for x-ray machines shall be submitted to and approved by the Contracting Officer before work is started.

4. DELIVERY, STORAGE AND PROTECTION: Materials shall be delivered to the site in an undamaged condition. Materials shall be carefully stored off the ground to provide proper ventilation, drainage, and protection against dampness. Defective and/or damaged materials shall be replaced by the Contractor at no expense to the Government.

5. GENERAL: Fabrications shall be well constructed products conforming to the types, materials and details indicated or specified herein. Basic forms of metal components from which assemblies are fabricated shall be of wrought or cast metal as shown or specified and physical properties, including tempers, of the metals shall be suitable for their intended use. All metals shall be free of defects which will affect their strength or durability and where exposed to view in the finished work, edges, and surfaces shall be without burrs, gouges, scratches, or other blemishes which mar their appearance. Exposed welds and brazed or soldered joints shall be ground smooth; polished or other surfaces with applied finishes shall be protected against damage or defacement of any kind. Assemblies shall be of the manufacturer's standard construction except where indicated or specified otherwise. Permanent connections for components subject to impact or other live loads shall be effected by welding, riveting or other approved methods. Welding shall conform to AWS D1.1 and shall be accomplished so as to prevent permanent distortion of the connected parts. Bolts, screws and similar suitable fastenings shall be used for anchoring or securing miscellaneous metal work to supporting construction unless indicated otherwise. The Contractor shall verify all measurements and shall take all necessary field measurements before fabrication. Materials and parts necessary to complete each item shall be included, even though such work is not definitely shown or specified. Miscellaneous bolts and anchors, supports, braces, and connections necessary for completion of the miscellaneous metalwork shall be provided.

5.1 Fabrication and Installation: All miscellaneous metalwork shall be fabricated and installed in a first-class manner by experienced mechanics skilled in the trade and in accordance with the manufacturer's directions.

1.5 National Association of Architectural Metal Manufacturers (NAAMM):

Metal Finishes Manual (Finish Designation), August 1969.

2. QUALITY CONTROL: Approvals, except those required for field installations, field applications and field tests, shall be obtained before delivery of materials to the project site.

3. SUBMITTALS:

3.1 Materials Tests and Test Reports: The testing requirements for materials incorporated in referenced documents will be waived provided the manufacturer submits certificates stating that previously manufactured materials have been tested by recognized laboratories, that such materials meet testing requirements specified and that the tested material is of the same type, quality, manufacture and make as that tested. Copies of the test reports need not be submitted, except as specifically requested by the Contracting Officer.

3.2 Descriptive Data: Submit complete descriptive data on the following materials. Data shall be sufficient to show conformance to specified requirements.

(a) Fiberglass Grating.
(b) Access Panels.
(c) Safety Nosings.
(d) Shop Primer.
(e) Floor Access Doors.

3.3 Shop Drawings: Shop drawings for the following items shall be submitted and approved before delivery of such items to the site. The drawings shall show materials, connections, finish and all pertinent details. Shop drawings to be submitted shall include the following items:

(a) Door and Opening Frames.
(b) Reinforcement for Door Frames.
(c) Supports for Surgical Lights, Traction Hooks, I.V. Tracks, Medical Gas Columns, Monorails and Pulleys.
(d) Steel Stairs.
(e) Steel Floor Gratings.
(f) Ladders.
(g) Railings.
(h) Aluminum Handrail Brackets.
(i) Gas Cylinder Brackets.
(j) X-ray Machine Supports.
(k) Access Panels.
(l) Trench Covers.
(m) Tank Straps.
(n) Loose Lintels.

SECTION 05500. METAL FABRICATIONS

1. APPLICABLE PUBLICATIONS: The following publications of the issues listed below, but referred to elsewhere by basic designation only, form a part of this specification to the extent indicated by the references thereto:

1.1 Federal Specifications:

QQ-A-200D	Aluminum Alloy, Bar, Rod, Shapes, Structural Shapes, Tube, and Wire Extruded; General Specification for.
QQ-A-250E	Aluminum, and Aluminum Alloy Plate and Sheet; General Specification for.
QQ-A-601E	Aluminum-Alloy Sand Castings.
QQ-F-461C & Am 1	Floor Plate, Steel, Rolled.
QQ-I-652C	Iron Castings, Gray.
QQ-I-666D	Iron Castings, Malleable.
QQ-S-681F	Steel Castings.
QQ-S-698 & Am 3	Steel, Sheet and Strip, Low Carbon.
RR-G-661C	Gratings, Metal, Floor (except for Naval Vessels).
TT-P-645	Primer, Paint, Zinc-chromate, Alkyd Type.
TT-V-51F	Varnish, Asphalt.

1.2 American Society for Testing and Materials (ASTM):

A108-73	Cold Finished Carbon Steel Bars and Shafting.
A36-75	Structural Steel.
A53-76	Welded and Seamless Steel Pipe.
A123	Zinc (Hot-galvanized) Coatings on products Fabricated from Rolled, Pressed, and Forged Steel Shapes, Plates, Bars, and Strip.
A167-74	Stainless and Heat-resisting Chromium-nickel Steel Plate, Sheet, and Strip.
A480-75	Flat-rolled Stainless and Heat-resisting Steel Plate, Sheet, and Strip.
A307-76b	Carbon Steel Externally and Internally Threaded Standard Fasteners.
A489-72	Carbon Steel Eyebolts.
A576-74	Steel Bars, Carbon, Hot-rolled, Special Quality.

1.3 American Welding Society (AWS):

D1.1-1975 (with 1976 & 1975 Revision)	Structural Welding Code.

1.4 American Institute of Steel Construction (AISC):

Manual of Steel Construction (7th Edition).

Mechanical, electrical, heating, ventilating and air conditioning equipment and devices will be independently supported and such supports provided under applicable trades involved. The ceiling grid and finish ceiling materials shall conform to the design of these devices when they penetrate the ceiling. Do not support any mechanical, electrical, heating, ventilating or air conditioning equipment or devices from the suspended ceiling systems.

7.11.1 Hanger Wire: The starting row of hangers shall be located 6 inches away from vertical surfaces. Hanger wire shall be laid out for each individual room or space, and placed to support framing around beams, ducts, columns, pipes, lighting fixtures, grilles, partitions, and all other openings or obstructions. Space hanger wire a maximum of 2 feet on centers in direction of main runners.

7.11.2 Main Runners: Main runners shall be a minimum of 1-1/2 inch cold rolled or hot rolled steel channels. Space main runners a maximum of 2-feet on centers, unless otherwise indicated.

7.11.3 Cross Furring: Space metal furring channels, perpendicular to main runners, a maximum of 16 inches on centers.

---END---

Members". Studs shall be suitable for drive-screw application of gypsum wallboard and veneer plaster, and furnished with all necessary 16 gage cold-rolled channels for bracing and framing. Studding shall be galvanized or shop primed in accordance with manufacturer's standard practice. Steel channels shall be galvanized in accordance with ASTM A123 or shop primed in accordance with manufacturer's standard practice.

7.5 Metal Furring Channel: Conform to the requirements of Paragraph 3.3 of GA-203.

7.6 Screws: Stud manufacturer's recommended type and size. Use "low-profile" screws when screws are in contact with gypsum wallboard or veneer plaster.

7.7 Hanger Wire: Galvanized, annealed, 8 gage steel wire. Provide suitable lateral stiffeners at alternate rows of hangers each direction when hanger length exceeds 150 times its diameter.

7.8 Inserts: Galvanized steel of type and size which will provide sufficient strength to carry the total weight with a minimum safety factor of two.

7.9 Acoustical Sealant: Type recommended by veneer plaster and gypsum wallboard manufacturer to provide STC ratings indicated.

7.10 Installation of Metal Framing and Furring: Where indicated, provide necessary structural stability in walls above dropped ceilings by providing auxiliary steel stud members securely anchored to partition and structural system above. Fire-resistive assemblies and sound rated assemblies shall be installed to provide the fire resistive ratings and sound ratings indicated.

7.10.1 Metal Studs: All metal studs shall be secured to metal runners at top and bottom with screws, both sides of partition.

7.10.2 Metal Furring Channels: Secure metal furring channels with fasteners occurring on alternate channel flanges and spaced 12 inches on centers.

7.10.3 Horizontal Type Reinforcement: Metal runners, and steel channels of sizes, shapes, and types as indicated.

7.10.4 Acoustical Sealant: Install acoustical sealant to provide STC ratings indicated. Apply sealant as recommended by the manufacturer, filling all cut-outs, openings, voids at floor and ceiling where partitions abut to dissimilar construction, and elsewhere to provide the required sound ratings.

7.11 Suspended Ceilings for Gypsum Wallboard and Veneer Plaster: At all openings that interrupt the ceiling continuity, install additional cross reinforcing including hangers to restore the lateral stability of the ceiling.

6.3.2 Inserts: Galvanized steel of type and size which will provide sufficient strength to carry the total weight with a minimum safety factor of two.

6.3.3 Clips: Galvanized steel adjustable type, provides sufficient strength to carry the total weight with a minimum safety factor of two, and of design to aid in adjusting the levelness of the suspension system.

6.3.4 Main Runners: Size, span, and spacing listed in ANSI A42.3 for Portland cement plaster, except as indicated otherwise.

6.4 Cross Furring: 3/4-inch channels of span listed in ANSI A42.3 for Portland cement plaster, except as indicated otherwise. Maximum spacing shall be 13-1/2 inches, unless indicated otherwise.

7. METAL FRAMING, FURRING AND CEILING SUSPENSION SYSTEMS FOR APPLICATION OF GYPSUM WALLBOARD AND VENEER PLASTER: Materials and their installation shall conform to GA-203, except as indicated or specified otherwise.

7.1 Fire-resistive Assemblies: Wherever fire rated veneer plaster and gypsum wallboard construction is indicated, all materials, methods, and installation, including types and spacing of fasteners, shall be in accordance with the specifications of the following testing agencies to provide the fire ratings indicated:

(a) Underwriters' Laboratories, Inc.'s "Fire Resistive Index" for the UL design numbers indicated.

(b) University of Ohio's published test reports for the test numbers indicated.

7.2 Sound Rated Assemblies: Veneer plaster and gypsum wallboard construction shall conform to the performance requirements of ASTM E90 and ASTM E413 for indicated STC ratings.

7.3 Metal Runners: Metal runners shall be standard, channel - shaped steel of minimum 20 gage, 16 gage where indicated, of sizes and spacings indicated, having a minimum yield point of 33,000 psi as determined in accordance with the AISI's "Specifications for the Design of Cold-formed Steel Structural Members". Runners shall be suitable for drive - screw application of gypsum wallboard and veneer plaster. Floor runners shall be galvanized and ceiling runner shall be galvanized or shop primed in accordance with manufacturer's standard practice. The runners shall be of designed width with legs not less than 1-1/4 inches high.

7.4 Metal Studs: Metal studs shall be standard, channel - shaped steel of minimum 20 gage, 16 gage where indicated, of sizes and spacings indicated, having a minimum yield point of 33,000 psi as determined in accordance with AISI's "Specifications for the Design of Cold-formed Steel Structural

4. DELIVERY AND STORAGE: Materials shall be delivered to the job site wrapped in protective covering and stored in dry locations with adequate ventilation, free from water, and in such a manner to permit easy access for inspection and handling. The material shall be handled carefully to prevent damage. Damaged items that cannot be restored to like-new condition shall be replaced at no additional cost to the Government.

5. GENERAL REQUIREMENTS: The work includes metal furring for application of metal lath, gypsum plaster, Portland cement plaster and stucco, and metal framing, furring, and ceiling suspension systems for application of gypsum wallboard, and veneer plaster. Work shall include all top and bottom tracks, runners, bracing, furring, hangers, hanger wire, inserts, clips, steel channels, fastenings, and all other accessories necessary for a complete installation. The work shall be built plumb and true, without waves or buckles, shall be rigid, and all members shall be fastened securely together and to walls, floors and other structural members. Lath, Portland cement plaster, stucco, gypsum plaster, veneer plaster, gypsum wallboard, and suspension systems for acoustical tile ceilings are specified in other sections.

6. METAL FRAMING AND FURRING FOR APPLICATION OF METAL LATH, GYPSUM PLASTER, PORTLAND CEMENT PLASTER, AND STUCCO: Metal framing and furring for Portland cement plaster and stucco shall conform to ANSI A42.3, unless otherwise indicated. Metal furring for gypsum plaster shall conform to ANSI A42.4, unless otherwise indicated. Steel members shall be galvanized. At all openings that interrupt the ceiling continuity, install additional cross reinforcing including hangers to restore the lateral stability of the ceiling.

6.1 Metal Furring: Provide to support metal lath, plaster, and stucco where plaster and stucco is not located at suspended or furred ceilings. The furring shall be steel channels. Horizontal stiffeners or bracing shall be provided. Maximum spacing of cross furring shall be 13-1/2 inches on centers, unless otherwise indicated.

6.2 Furred Suspension System for Metal Lath and Stucco:

6.2.1 Main Runners: ANSI A42.3, 2 inch galvanized cold rolled channel spaced 24 inches on centers, except as indicated otherwise.

6.2.2 Cross Furring: ANSI A42.3, 3/4 inch galvanized cold rolled channels, maximum spacing shall be 13-1/2 inches, except as indicated otherwise.

6.3 Ceiling Suspension System for Metal Lath and Portland Cement Plaster:

6.3.1 Hangers: ANSI A42.3, except use not less than 8 gage wire, if wire hangers are used. Provide lateral stiffeners at alternate rows of hangers each way when hanger length exceeds 150 times its diameter.

3.1.1 Sample Certificate: The certificate shall not contain statements that could be interpreted to imply that the product does not meet all requirements specified, such as "as good as"; "achieve the same end use and results as materials formulated in accordance with the referenced specification"; "equal or exceed the service and performance of the specified material". The certificate should simply state that the product conforms to all requirements specified.

SAMPLE CERTIFICATE

The manufacturer hereby certifies that the following products being furnished for this project conform to all requirements of the project specifications and of the reference specifications listed:

MANUFACTURER AND PRODUCT	REFERENCE SPECIFICATION
John Doe Company Metal Studs	AISI's "Specification for the Design of Cold-formed Steel Structural Members".

SIGNATURE AND TITLE

3.2 Catalog Data: Complete descriptive literature shall be submitted to the Contracting Officer for approval for each type of each item specified or required for completion of the work. Data which describe more than one type, size, model, or item shall be clearly marked to indicate which type, size, model, or item the Contractor intends to provide. Data shall be sufficient to show conformance to specified requirements.

3.3 Shop Drawings: Complete shop drawings shall be submitted to the Contracting Officer for approval for the following items. Show fire-resistive ratings, sound ratings, layout, details, materials, dimensions, finishes, and all information necessary for fabrication and installation of the item.

(a) Metal Framing and Furring for Application of Metal Lath, Gypsum Plaster, Portland Cement Plaster, and Stucco.

(b) Metal Framing, Furring, and Ceiling Suspension Systems for Application of Gypsum Wallboard and Veneer Plaster.

3.4 Samples: Samples for all materials specified under this section shall be submitted to and approved by the Contracting Officer before work is started.

3.5 Test Reports: Copies of the test reports for fire-resistive assemblies and sound rated assemblies shall be submitted to and approved by the Contracting Officer.

SECTION 05420. METAL FRAMING AND FURRING

1. APPLICABLE PUBLICATIONS: The following publications of the issues listed below, but referred to elsewhere by basic designation only, form a part of this specification to the extent indicated by the references thereto:

1.1 American Iron and Steel Institute (AISI) Publication:

Specification for the Design of Cold-formed Steel Structural Members. (1968 Edition).

1.2 American National Standard Institute (ANSI) Publication:

A42.3-1971	Lathing and Furring for Portland Cement and Portland Cement-Lime Plastering, Exterior (Stucco) and Interior.
A42.4-1967	Interior Lathing and Furring.

1.3 American Society for Testing and Materials (ASTM) Publications:

A123-73	Zinc (Hot-galvanized) Coatings on Products Fabricated From Rolled, Pressed, and Forged Steel Shapes, Plates, Bars, and Strip.
E90-75	Airborne-sound Transmission Loss of Building Partitions, Laboratory Measurement of.
E413-73	Sound Transmission Class, Classification for Determination of.

1.4 Gypsum Association (GA) Publications:

GA-203-71	Installation of Screw-type Steel Framing Members to Receive Gypsumboard.

1.5 Underwriters' Laboratories, Inc. (UL) Publication:

1978	Fire Resistive Index.

2. QUALITY CONTROL: Approvals, except those required for field installations, field applications, and field tests shall be obtained before custom fabrication is started and before delivery of materials or equipment to the project site.

3. SUBMITTALS:

3.1 Certificates: Submit certificates to the Contracting Officer for approval from the manufacturer attesting that the following products conform to all requirements of this specification and of reference documents:

Metal Studs
Metal Furring

9.4.1 Steel Deck: Welds, cut edges, and damaged portions of zinc-coatings shall be heavily coated with high zinc dust paint conforming to MIL-P-21035.

9.4.2 Steel Plate: Welds, connections, surfaces not shop primed prior to welding and areas of abraded shop paint shall receive paint of the same type used for the shop coat.

9.5 Inspection of Installed Steel Decking for Flat Top Surface: The top surface of the decking shall be inspected for flatness after installation. A 4 foot straightedge shall be placed across the decking ribs over the structural supporting members at all locations. If the straightedge fails to touch the entire top surface of the decking or if top surfaces of abutting units are not in alignment, corrective measures or replacement shall be provided at no additional cost to the Government. After corrective measures or replacement has been performed, the decking shall be reinspected.

---END---

8.2.3 Priming: Treated surfaces shall be primed as soon as practicable after the pretreatment coating has dried. Except as modified herein, the primer shall be a coat of zinc chromate primer conforming to specification TT-P-645 or a coat of red lead paint, type I or type III, conforming to specification TT-P-86, applied to a minimum dry film thickness of 2.0 mils. After erection, connections and areas of abraded shop paint shall receive paint of the same type used for the shop coat.

9. INSTALLATION:

9.1 Steel Decking: The deck units shall be placed on supports, properly adjusted, and aligned at right angles to supports before being permanently welded in place. Inaccuracies in alignment or leveling of supports shall be corrected before decking is permanently welded in place. Minimum bearing for the deck units shall be in accordance with AISI's "Cold-Formed Steel Design Manual". Side laps of each deck unit shall be fastened to the adjoining unit with sheet metal screws spaced 12 inches on centers.

9.2 Steel Plates: Unless otherwise indicated, erection of steel plates shall be in accordance with AISC's "Manual of Steel Construction". Inaccuracies in alignment or leveling of supports shall be corrected before steel plates are permanently welded in place. Erecting equipment shall be suitable for the work and shall be in first class condition. Where units cannot be assembled or fitted properly as a result of errors in fabrication or of deformation due to handling or transportation, such condition shall be reported immediately and approval of the method of correction obtained; the correction shall be made in the presence of the approving authority. The straightening of plates and angles or other shapes shall be done by approved methods. If heating of metal is approved for straightening, it shall not be to a higher temperature than that producing a dark "cherry red" color. After heating, the metal shall be cooled as slowly as possible. There shall be no evidence of fracture on the surface of the metal after straightening. Safety belts and lines shall be used by workmen aloft on high structures, unless safe working platforms or safety nets are provided.

9.3 Welding: Welding shall conform to AWS D1.1. The units shall be welded to supports by means of electric arc-welding. Welding shall be performed by qualified welders. The qualification of welders and the duration of qualification period shall be in accordance with AWS D1.1. The location, size, and spacing of welds shall be shown on the approved shop drawings. Warped or bent units shall be clamped or weighted to create firm contact between units and supports while welding is being performed.

9.4 Repair of Coatings: Welds shall be cleaned by chipping or wire brushing.

7.1.3.1 Adjusting Plates: Adjusting plates or segments of deck units shall be provided in locations too narrow to accommodate full-sized units. As far as practical, the plates shall be the same gage and configuration as the decking.

7.1.3.2 End Closures: End closures shall be provided to close the open ends at vertical surfaces and elsewhere as indicated. Closures shall be not lighter than 18 gage.

7.1.3.3 Miscellaneous Items: Various type of plates and closures shall be provided as indicated or as necessary to complete the work.

7.2 Steel Plate: ASTM A36.

7.3 Welding Electrodes and Rods: Welding electrodes and rods shall conform to AWS D1.1.

8. FABRICATION OF STEEL PLATE:

8.1 General: Fabrication shall be in accordance with the applicable provisions of the AISC's "Manual of Steel Construction". Workmanship shall be equal to standard commercial practice in modern structural shops. Fabrication and assembly shall be done in the shop to the greatest extent possible. Units shall be matched mark to insure accurate assembly in the field.

8.2 Shop Painting: All steel plates shall be shop painted. Surfaces to be welded shall not be coated within three inches of the weld, prior to welding. Surfaces shall be thoroughly dry and clean when the paint is applied. No painting shall be done in freezing or wet weather except under cover; the temperature shall be above 45 degrees F but not over 90 degrees F. Paint shall be applied in a workmanlike manner, and all joints and crevices shall be coated thoroughly.

8.2.1 Cleaning: Steel plates shall be cleaned by an approved blasting process, wire brushing, or other manual or mechanical means for removal of loose mill scale, rust, dirt, and other deleterious substances. Cleaned surfaces which become contaminated with rust, dirt, oil, grease, or other contaminants shall be washed with solvents until thoroughly clean. The surfaces, when assembled, shall be free from rust, grease, dirt and other foreign matter.

8.2.2 Pretreatment: Immediately after cleaning, surfaces shall be coated with a coat of pretreatment coating conforming to specification MIL-P-15328 applied to a dry film thickness of 0.3 to 0.5 mil or be given a crystalline phosphate base coating conforming to specification TT-C-490, method I, except that the phosphate base coating shall be applied only to blast cleaned, bare metal surfaces. Pretreatment may be omitted when red lead paint conforming to type I of specification TT-P-86 is used.

entire construction period. The maximum uniform distributed storage load shall not exceed the design live load. The steel deck and steel plate shall not be used for storage or as a working platform until the units have been welded in position. All damaged material shall be replaced by the Contractor at no expense to the Government. Decking and steel plate stored at the site before erection shall be stacked on platforms or pallets, arranged to provide proper circulation, and covered with tarpaulins or other suitable weathertight covering. The Contractor shall provide protection as necessary to prevent rusting and damage to protective coatings. Steel decking that becomes rusted, on which zinc-coatings and primer have become corroded shall be replaced with new decking at no additional cost to the Government.

5. GENERAL REQUIREMENTS: Steel decking and steel plate shall be provided where indicated to support sloping brick sills. Steel decking shall be the product of a manufacturer who is established as a fabricator of steel roof decking. All accessories required for a complete installation shall be provided. Steel decking shall have a depth of 1-1/2 inches, shall have ribs the full depth of the decking spaced not over 6 inches on centers, maximum top flute opening of 1 inch, minimum bottom flute opening of 3/8 inch, and shall be Narrow Rib Deck Type NR18 conforming to SDI'S "Guide to Floor Decks and Roof Decks". Steel roof deck for Public Works Building is specified in section entitled "Steel Roof Decks".

6. DESIGN: Dead load shall be assumed as 60 pounds per square foot. The maximum allowable deflection under total loading shall be 1/360 of the span.

6.1 Steel Decking: The system shall be designed in accordance with the requirements of the AISI's "Cold-Formed Steel Design Manual" and "SDI's Basic Design Specifications", except as specified otherwise herein. Side edges of deck units shall be designed to lap with adjoining deck units.

6.2 Steel Plate: Steel plate shall be designed in accordance with AISC's "Manual of Steel Construction".

7. MATERIALS:

7.1 Steel Decking: Steel used in the fabrication of decking shall conform to the requirements of the AISI "Cold-Formed Steel Design Manual", except as specified otherwise herein.

7.1.1 Minimum Gage: Steel decking shall be not lighter than 18 gage.

7.1.2 Zinc-coating: Decking and metal accessories shall be zinc-coated steel. Zinc-coating shall be G90 in accordance with ASTM A525.

7.1.3 Accessories: Metal accessories shall be of the same material as the decking and shall be not lighter than 18 gage. All accessories shall be the decking manufacturer's standard type unless otherwise required and shall be provided as follows:

2. QUALITY CONTROL: Approvals, except those required for field installations, field applications and field tests, shall be obtained before delivery of materials to the project site.

3. SUBMITTALS:

3.1 Shop Drawings and Catalog Data: Shop drawings and catalog data shall be submitted and approved before the work is started. The drawings and catalog data shall show a large scale cross-sectional detail of the steel decking, various connections, bearing on structural supports, methods of welding, attachment of accessories, layouts, and other pertinent details. Shop drawings for steel plates shall include complete information necessary for the fabrication of steel plates, including the location, type, and size of all welds, match marking of the units and other pertinent details. All welds shall be indicated by standard welding symbols of the AWS. Design calculations shall be submitted upon request.

3.2 Tests and Certificates: The testing requirements for materials incorporated in referenced documents will be waived provided the Contractor submits certificates from the manufacturer stating that materials furnished for this project conform to all requirements of this specification and the referenced documents. Copies of the test reports need not be submitted except as specifically requested by the Contracting Officer.

3.2.1 Sample Certificate: The certificate shall not contain statements that could be interpreted to imply that the product does not meet all requirements specified, such as "as good as"; "achieve the same end use and results as materials formulated in accordance with the referenced specification"; "equal or exceed the service and performance of the specified material". The certificate should simply state that the product conforms to all requirements specified.

SAMPLE CERTIFICATE

The manufacturer hereby certifies that the following products being furnished for this project conform to all requirements of the project specifications and the respective reference specifications:

MANUFACTURER AND PRODUCT	REFERENCE SPECIFICATION
John Doe Company Heavy Duty Zinc-Coated Steel	ASTM A525, Coating Class G90

SIGNATURE AND TITLE

4. DELIVERY, STORAGE, AND PROTECTION: Materials shall be delivered, stored, handled, and installed in a manner to protect it from corrosion, deformation, and other type damage. Special care shall be exercised not to damage the material or overload the steel deck and steel plate during the

SECTION 05322. STEEL DECK AND PLATE FOR SLOPING BRICK SILLS

1. APPLICABLE PUBLICATIONS: The following publications of the issues listed below, but referred to elsewhere by basic designation only, form a part of this specification to the extent indicated by the references thereto:

1.1 Federal Specifications:

TT-C-490B	Cleaning Methods and Pretreatment of Ferrous Surfaces for Organic Coatings.
TT-P-86G	Paint, Red-Lead-Base, Ready-Mixed.
TT-P-645	Primer, Paint, Zinc-chromate, Alkyd Type.

1.2 Military Specification:

MIL-P-15328C & Am 1	Primer (Wash), Pretreatment Blue, (Formula No. 117-B for Metals).
MIL-P-21035 & Am 1	Paint, High Zinc Dust Content, Galvanizing Repair.

1.3 American Institute of Steel Construction (AISC):

Manual of Steel Construction - 7th Edition.

1.4 American Iron and Steel Institute (AISI):

Cold-Formed Steel Design Manual (1968 Edition).

1.5 American Society for Testing and Materials (ASTM):

A36-75	Structural Steel.
A525-76	Steel Sheets, Zinc-Coated (Galvanized) by the Hot-Dip Process, General Requirements.

1.6 American Welding Society (AWS):

D1.1-75 (with 1976 & 1977 Revisions)	Structural Welding Code.

1.7 Steel Deck Institute (SDI) Publications:

Basic Design Specifications (August 1977 Edition).
Guide to Floor Decks and Roof Decks (1978 Edition).

(a) Wall Panel Assembly: Two units 12 inches long by full width of panel with specified finish.

(b) Fasteners: Two of each type.

(c) Calking: Two tubes of each type.

3.3 Shop Drawings: Shop drawings shall be submitted and approved before work is started. Shop drawings shall show profile; gage of face sheet; gage of interior liner; location, spacing and types of fasteners; location, gage, shape, and method of attachment of all trim and flashings; other details as may be required for a weathertight installation; large scale cross-section of siding; layout of siding; detail of side laps; and other pertinent details. Design calculations and complete erection instructions shall be submitted. The shop drawings and data shall be complete in one submittal.

3.4 Manufacturer's Catalog Data or other Descriptive Data: Manufacturer's catalog data or other descriptive data of joint sealing material, thermal insulation; composite metal siding, including factory protective coatings and color finish, related flashings and accessories, and fasteners shall be submitted and approved.

4. DELIVERY AND STORAGE: Prefabricated components, panels, and other manufactured items shall be delivered, stored and handled in such a manner that they will not be damaged or deformed. Materials stored on the site before erection shall be stacked on platforms or pallets and covered with tarpaulins or other suitable weathertight covering. All metal panels shall be stored so that water which might have accumulated during transit or storage will drain. The panels shall not be stored in contact with materials which might cause staining. Upon arrival on the job site, the panels shall be inspected for moisture accumulation. If found wet, the moisture shall be removed and the panels shall be re-stacked and protected until used.

5. DESIGN CRITERIA:

5.1 Deflection: Maximum allowable deflection L/180.

5.2 Wind Loads: Wind load of 41 pounds per square foot inward; and wind load of 41 pounds per square foot outward.

6. MATERIALS: Composite metal siding is indicated on Drawings as "MT-1".

6.1 Panels: Composite metal panels shall be 2-inches thick, 24-inches wide with both faces flat without interruption. Panels shall be full height without horizontal joints. Side joints shall be tongue and grooved, shiplap design, with both female joints factory calked. Composite metal siding shall conform to the design criteria, including wind load as indicated on drawings.

6.1.1 Face Sheet and Liner Sheet: Panel face sheet and liner shall be stucco embossed. Face sheet and liner sheet shall be fabricated from 22 gage sheet steel conforming to ASTM A446, Grade B. Both sides of face sheet and liner sheet shall be galvanized in accordance with ASTM A525 to provide a G90 coating.

6.1.2 Insulation: Insulation shall be poured-in-place foam core with a minimum 94% closed cell structures with the following physical properties:

(a) Density: 2.6 lbs/cu ft minimum

(b) Shear Stress: Perpendicular to rise 32 psi

(c) Compressive Strength: 23 psi minimum

(d) Tensile Strength: 34 psi minimum

(e) Humid Aging: 250 hours at 121 degree F, 100%

(f) Heat Aging: 250 hours at 180 degrees F, 4% maximum volume increase.

6.2 Trim: Sheet metal trim shall be of same gage material and finish as exterior face sheet. Provide all required trim located at top of wall, corners, and elsewhere as indicated or required. Provide breakmetal angles as indicated.

6.3 Clip Angle: Clip angle shall be fabricated from 12 gage galvanized steel.

6.4 Sealant: Type recommended by composite metal siding manufacturer.

6.5 Fasteners: Fasteners for attachment of panels to structural supports and fasteners for attachment of trim shall be as approved, and in accordance with manufacturer's recommendations. Unless otherwise recommended by panel manufacturer, all fasteners shall be self-tapping screws. Other types of fasteners of panel manufacturer's standard type may be used if prior approval is obtained. The fastening system shall be designed to withstand the design loads specified herein. Fasteners to secure panels shall be concealed in the side joint and shall be cadmium plated carbon steel. Exposed fasteners for trim shall be stainless steel prepainted with same finish and color to match siding and furnished with composite metal and polymerized chloroprene or neoprene washers.

7. FINISH: Finish coating on exterior face sheet and exposed surfaces of trim shall be a polyvinylidene flouride (PVF_2) coating based on fluorocarbon resins. The percent of fluorocarbon resin shall be not less than 70 percent. After pretreatment of metal substrate as prescribed by coating manufacturer, apply by roll-coating or spray-coating one coat of zinc-chromate

epoxy primer yielding approximately 0.2 mil dry film thickness. Oven bake primer in accordance with manufacturer's directions. Following application of prime coat, apply by roll-coating or spray coating one coat of polyvinylidene flouride to yield a minimum of 0.8 mil dry film thickness. Cure finish coat in oven at approximately 600 degrees F. Finish color shall be black. Coat interior surfaces of exterior face sheet, both sides of liner sheet, and unexposed surfaces of trim with manufacturer's standard epoxy primer.

8. INSTALLATION: All materials shall be installed in strict accordance with the manufacturer's printed erection instructions, and the approved shop drawings. Care shall be exercised in storing, handling, and installation to prevent any damage to the panels. The panels shall be full height without horizontal joints. Panels shall be in full and firm contact with the supports and with each other at side laps. Extreme care shall be exercised in drilling pilot holes for fastenings to keep drills perpendicular. After drilling, all metal filings and burrs shall be removed from holes prior to installing fasteners and washers. Size and spacing of fasteners used in erection shall be as recommended by the manufacturer and shall be designed to withstand the design loads specified herein.

8.1 General: Examine alignment of structural steel before erecting composite metal siding. Do not proceed with installation if structural steel is not aligned to the tolerances set up by AISC's "Code of Standard Practice for Steel Buildings and Bridges". Erection shall be by the manufacturer's own erection division or a previously approved and licensed installer. Erection shall be started correctly and the panels held true to line. Erect panels with vertical lines plumb.

8.2 Joint Sealing Material: Sealing material of the type recommended by the panel manufacturer shall be provided to seal all trim, flashing, closures, and elsewhere as necessary to provide watertight construction.

8.3 Trim: All trim and related closures and accessories in connection with the composite metal siding shall be provided as indicated and as necessary to provide a watertight installation. Details of installation which are not indicated shall be in accordance with the panel manufacturer's printed instructions and details or the approved shop drawings. Installation shall allow for expansion and contraction of flashing.

9. FIELD REPAIR AND TOUCH-UP: Where panels or accessories have factory finish damaged, repair in accordance with manufacturer's touch-up system. Repaired surfaces not acceptable shall be replaced without expense to the Government.

---END---

SECTION 07510. BUILT-UP BITUMINOUS ROOFING

1. APPLICABLE PUBLICATIONS: The following publications of the issues listed below, but referred to thereafter by basic designation only, form a part of this specification to the extent indicated by the references thereto:

1.1 Federal Specifications:

SS-C-153C	Cement; Bituminous, Plastic.

1.2 American Society for Testing and Materials (ASTM):

D41-73	Primer for Use With Asphalt in Dampproofing and Waterproofing.
D173-74	Woven Cotton Fabrics Saturated with Bituminous Substances for Use in Waterproofing.
D227-56 (1970)	Coal-tar Saturated Roofing Felt for Use in Waterproofing and in Construction Built-up Roofs.
D250-70	Asphalt-saturated Asbestos Felts for Use in Waterproofing and in Construction of Built-up Roofs.
D312-71	Asphalt for Use in Constructing Built-up Roof Coverings.
D450-71	Coal-tar Pitch for Roofing, Dampproofing and Waterproofing.
D517-70(1976)	Asphalt Plank.
D1863-64 (1977)	Mineral Aggregate for Use on Built-up Roofs.
D2626-73	Asphalt Base Sheet for Use in Construction of Built-up Roofs.

1.3 Corps of Engineers:

EM 385-1-1 1 June 1973	General Safety Requirements Manual.

2. ROOFING SYSTEM: Roofing system shall be one of the following:

2.1 Type RTA: Rag felt, tar saturated, aggregate surfaced.

Materials per 100 sq. ft. of Roof (lbs. min., except where two figures are indicated, they are the minimum and maximum)

Components	Substrate	
	Expanded Polystyrene Aggregate Roof Fill	Insulation
Felt		
RB40	1 Ply - 37	1 Ply - 37
RT15	3 Plies - 39	3 Plies - 39

Coal-tar pitch		Asphalt
On deck	- - -	Type III - 25
Between plies	Tar - 75	Tar - 75
Top Pouring	Tar - 70	Tar - 70
Surfacing		
Gravel	400	400
or Slag	300	300
Cut test weight (ounces)	20.8 - 23.0	23.2 - 25.4

2.2 Type AAA: Asbestos felt, asphalt saturated, aggregate surfaced.

Materials per 100 sq. ft. of Roof (lbs. min., except that where two figures are indicated, they are the minimum and maximum.

Components	Substrate	
	Expanded Polystyrene Aggregate Roof Fill	Insulation
Felt		
RB40	1 Ply - 37	1 Ply - 37
AA15	3 Plies - 39	3 Plies - 39
Asphalt		
On substrate	- - -	Type III - 25
Between plies	45-60	45-60
Top pouring	60	60
Surfacing		
Gravel	400	400
or Slag	300	300
Cut Test weight (ounces)	18.6-20.8	21.0-23.2

3. QUALITY CONTROL: Approvals, except those required for field installations, field applications and field tests, shall be obtained before delivery of materials to the project site.

3.1 Materials Tests and Test Reports: The testing requirements for materials incorporated in referenced documents will be waived provided the manufacturer submits certificates stating that previously manufactured materials have been tested by recognized laboratories, that such materials meet testing requirements specified, and that the materials furnished for this project are of the same type, quality, manufacture and make as that tested.

Copies of the test reports need not be submitted except as specifically requested by the Contracting Officer.

3.2 Certificates of Conformance or Compliance: Before delivery of materials, submit in triplicate, certificates from the manufacturer certifying that materials provided are chemically and physically compatible with each other and are suitable for inclusion within the total roof system specified herein. The acceptance of certification shall in no case jeopardize the Government's right to test materials when tests are deemed necessary to ensure compliance.

3.3 Descriptive Data: Before delivery of any materials to the building site, descriptive data on all roofing materials shall be submitted and approved.

3.4 Field Tests:

3.4.1 Field Samples of Built-Up Roofing (Cut Tests): After application of the specified roofing felts and prior to the applying surfacing, field samples of built-up roofing shall be taken from the deck in the presence of the Contracting Officer. The Contracting Officer will inspect the sample for specified number of plies, evenness of application of bitumen, bond between plies, presence of harmful foreign materials, visable presence of moisture in the sandwich; and wet insulation; and shall weigh the sample to determine quantity of bitumen used. Samples shall be 4 inches x 36 inches cut across laps in felts in a manner to expose the specified number of plies. The 4-inch edge shall coincide with an edge lap of felt and shall not be positioned over an end lap. The cutting of samples, replacing of samples, and patching shall be done at no additional cost to the Government. Areas where samples are to be taken shall be selected by the Contracting Officer immediately prior to cutting. Roofing will not be permitted to proceed until all deficiencies disclosed as a result of "cut-tests" have been corrected and approved.

(a) Number of Cut Tests: Not less than two samples shall be taken from each 100 squares of roofed area, and at least one sample shall be taken from each day's application, regardless of the quantity applied. If the samples taken show a deficiency, additional samples will be required in order to determine the extent of the deficiency.

(b) Weight Tolerance: The test sample shall not weigh less than the minimum nor more than the maximum cut test weights specified hereinbefore.

(c) Correction of Deficiencies: Where interply moppings are too light, deficient areas shall have an additional ply of felt applied in a full mopping of bitumen. Felt shall be applied with 4-inch side laps and end laps. Where free water is discovered between the plies, the affected area shall be removed and rebuilt in dry conditions. Where insulation is found to be wet, the insulation shall be removed and new built-up roofing and insulation shall be provided at no additional cost to the Government.

(d) Sample Cutting Device: A template shall be provided for cutting the samples. The template shall be rectangular, 4 by 36 inches and shall be of a type that will permit accurate cutting of samples with standard roofing knives. Cutting edges of knife shall be kept clean by washing in proper solvent after each cut.

(e) Scales: Scales shall be portable, graduated in ounces, and accurate to 1/2 ounce.

(f) Patching Cut-out Area: Immediately after being weighed, the cut-out sample shall be replaced. Should it become impossible to immediately replace the cut-out sample in the roof, a new section of equivalent size and structure shall be substituted. For non-nailable decks, the sample shall be replaced in hot bitumen. For nailable decks, one ply of ply felt shall be inserted into the opening from which the sample was taken and shall be sprinkle nailed to hold it in place. The felt shall be coated heavily with plastic cement and the cutout sample shall be pressed firmly into the plastic cement. The area over replaced samples shall then be covered with 3 plies of ply felt, hot mopped in place with the first ply overlapping the cutout area 4 inches on all sides and each succeeding ply overlapping the preceeding ply 4 inches on all sides except that the final sheet shall be the full width of the roll, centered over the sample.

3.4.2 Drain Sump Test: Drains shall be plugged and drain sumps shall be filled with water for 24 hours to test watertightness. Careful measurement shall be made of the water level at the beginning and end of the 24 hour period. In the event that the water level falls, the water shall be removed and the installation shall be thoroughly dried and inspected. Repairs or replacement shall be made as directed, after which the test shall be repeated. Work shall not proceed before approval and acceptance.

4. DELIVERY, STORAGE AND HANDLING: Manufactured roofing materials shall be delivered in manufacturer's original unopened containers and rolls with labels intact and legible. Where materials are covered by a referenced specification number, the containers shall bear the specification number, type, and class, as applicable. Materials shall be delivered in sufficient quantity to allow continuity of work. Roll materials shall be handled so as to prevent damage to edge or ends, shall be protected against wetting and moisture absorption, and shall be stored on end on clean raised platforms in dry locations with adequate ventilation. Roll materials shall not be stored in any building under construction until concrete, masonry work, ceramic tile, and plaster are dry. Wet materials shall be marked and removed from the project site. Immediately before application, roll materials shall be stored for 24 hours in an area maintained at no lower temperature than 50° F. Not more than one day's supply of felts shall be stored on the roof at any time, stacked on pallets and completely covered with weatherproof protective coverings whenever work is interrupted or when there is precipitation of any kind. Covering shall be securely tied to the pallets in such a way as to be completely weather-tight and yet provide sufficient ventilation to prevent condensation. Materials temporarily stored on the roof shall be located in

approved areas and shall be distributed to stay within the indicated live load limits of the roof construction. Material handling equipment shall be selected and operated so as not to damage existing construction or applied roofing. Storage, walking, wheeling or trucking will not be permitted directly on roofing surfaces. Smooth, clean board or plank runways and platforms shall be provided near supports as necessary to distribute weight to conform to indicated live load limits of the roof construction. Equipment for roofing work shall be rubber tired.

5. MATERIALS:

5.1 Coal Tar Pitch: ASTM D450, Type A, Softening Point 140 to 155 degrees F.

5.2 Asphalt:

Roof Slope (in./ft.)	Specification	Softening Point (^{o}F)
Up to and including 1/2	ASTM D312, Type I	135-150

5.2.1 Steep Asphalt: ASTM D312, Type III, softening point 180-200 degrees F.

5.3 Asphalt Primer: ASTM D41.

5.4 Bituminous Plastic Cement: SS-C-153. Type I shall be used for asphalt saturated or coated materials and Type II for coal-tar saturated materials.

5.5. Aggregates for Surfacing Built-up Roofing: ASTM D1863. Aggregates shall be commercial grade, washed gravel, crushed stone, or crushed blast furnace slag.

5.6 Nails and Fasteners: Nails shall be of galvanized steel, except that hard copper nails shall be used with copper; aluminum or stainless steel nails shall be used with aluminum; and stainless steel nails shall be used with stainless steel. Fasteners shall be self-clinching type or penetrating type as recommended by the manufacturer of the deck material. Nails and fasteners shall be flush-driven through flat metal discs of not less than 1-3/8 inch diameter. Metal discs may be omitted when one piece composite nails or fasteners with heads not less than one inch diameter are used. Unless otherwise specified, minimum withdrawal resistance of nails or fasteners shall be 40 pounds each in the specific decks, when driven.

5.6.1 Wood Nailers: Roofing nails for wood nailers shall be 11 gage, barbed, zinc-coated nails with 7/16 to 5/8-inch diameter heads. Nails shall be long enough to penetrate into the wood nailers at least 5/8-inch.

5.6.2 Expanded Polystyrene Aggregate Roof Fill: Special self-clinching fasteners as recommended by the fill manufacturer shall be used.

5.6.3 Masonry or Concrete: Special hardened nails shall be used when nailers are not provided.

5.7 Metal Discs: Flat discs or caps of zinc coated sheet metal not lighter than 28 gage and not less than 1-3/8 inches in diameter. Disc shall be formed to prevent dishing. Bell or cup-shaped caps are not acceptable.

5.8 Asphalt Plank: ASTM D517, Type "b", thickness not less than 1/2-inch.

5.9 Felts for Built-up Roofing and Flashing:

Designation (Symbol and Nominal weight)	Use	Felt	Saturant	Coating	Specification
RT15	Plying Felt	Rag	Tar	None	ASTM D227 Min. wt. 13 lbs/sq.
AA15	Plying Felt	Asbestos (Perforated)	Asphalt	None	ASTM D250 Min. wt. 13 lbs/sq.
RB40	Base Sheet	Rag	Asphalt	Asphalt	ASTM D2626 Type I or II, Min. wt. 37 lbs/sq.

6. PREPARATION: The work shall be coordinated with that of the other trades to assure that components which are to be secured to or stripped into the roofing system are available and that flashing and counter flashing is installed as the work progresses. Protective devices for safeguarding workers exposed to slipping and falling hazards inherent in roofing operations, shall be provided by the Contractor. The specific safety requirements are located in Section 1926.500(d)(1) and 1926.451(u) of the Occupational Safety and Health Act of 1970 and Section 22.C of the Corps of Engineers General Safety Manual, EM385-1-1.

6.1 Condition of Surfaces: All surfaces to which built-up roofing is to be applied shall be examined to assure that their condition is satisfactory for application of the roofing system. Particular attention shall be paid to the requirements listed herein. All defects that will adversely affect proper application of the roofing system shall be corrected and the surfaces shall be inspected and approved immediately before the application of the roofing materials.

6.1.1 In-place Materials and Equipment: All drains, curbs, cants, control joints, expansion joints, perimeter walls, roof penetrating components, and equipment supports shall be in place.

6.1.2 Deck Surfaces: Surfaces shall be rigid, dry, smooth, and free from cracks, holes, and sharp changes in elevation. The level of the deck shall not vary more than 1/4-inch within an area 10 feet x 10 feet.

6.1.3 Decks: Decks shall have been designed and built with adequate slope to provide free drainage to the drains without ponding water between supporting members, and shall be adequate to support and securely hold the roofing system by the specified method of attachment.

6.1.4 Walls and All Vertical Surfaces: Walls and all vertical surfaces, to which roofing is to be flashed shall have been so constructed as to be waterproof above the flashing line, and in all cases, shall permit nailing of the base flashing.

6.1.5 Wood Nailers: Treated wood nailers shall be in place at all eaves and openings and intersections with vertical surfaces for securing of roofing felts, edging strips, gravel stops, and roof fixtures. Embedded nailers shall be flush with deck surfaces, unless otherwise indicated. Where roof insulation is indicated, nailers shall be same thickness as the insulation, unless otherwise indicated.

6.1.6 Cants: Cants shall be securely fastened in place in the angles formed by walls and other vertical surfaces as backing for the base flashing. The angle of the cant shall be 45° and the height of the vertical leg at least 4 inches. Non-nailable insulation board, lightweight insulating concrete fill, or asphaltic fill cants are not acceptable.

6.1.7 Expanded Polystyrene Aggregate Roof Fill: Roofing materials shall not be applied until after the material has been properly cured and seasoned and all shrinkage has occurred.

6.1.8 Insulation: Surface shall be smooth and even without broken or cracked boards.

6.2 Priming of Surfaces:

6.2.1 Masonry Surfaces: Masonry surfaces which are to receive flashing shall be coated uniformly with asphalt primer at the rate of one gallon per 100 square feet. The primer shall be allowed to dry thoroughly prior to application of the flashing materials.

6.2.2 Flanges: Flanges of metal gravel stops, edging strips, flashing collars, and accessories shall be primed and allowed to dry thoroughly prior to stripping into the roofing system.

7. APPLICATION: The application of the complete roofing system, including top surfacing, shall be finished in one operation. Top surfacing shall be brought up to within 3 to 5 feet of the line of termination of each days work, and all exposed felts, including base sheets, shall be protected with a glaze coat of hot bitumen applied at a rate of not less than 25 pounds per 100 square feet. Where insulation is specified, the application of the built-up roofing shall follow the laying of the insulation by an amount limited by the minimum working space required for the operation. In all procedures in which hot bitumen is used in the bonding of materials to each other, or in laminating plies of felt into composite membrane, the operation shall be such that the application of the material which is laid into the bitumen shall follow immediately behind the application of the hot bitumen. There shall be no working ahead with the bitumen. The bitumen must be completely fluid, with mop temperatures within the range specified at the instant the superimposed material comes into contact with the bitumen. Felts and surfacing aggregates shall be embedded in, not laid on, the bitumen. Application of bitumen between membrane plies shall be such as to produce voidless coverage and complete penetration of the bitumen, both into the felt above and into the felt below. As sheet materials are being rolled into the hot bitumen, they shall be immediately and thoroughly broomed down to eliminate any air which might have been trapped and to provide tight, smooth laminations without wrinkles, buckles, kinks, or fish mouths. Complete application of the roofing system shall be without pockets and blisters. The practice of laying the felts dry and turning back the laps for mopping between plies will not be permitted. Roofing felts shall be applied at right angles to the roof slope so that the direction of flow of water is over, and not against the laps. All roofing plies shall be extended to the top of the cant strips. Felts shall be trimmed to a neat fit around vent pipes, roof drains and other projections through the roof.

7.1 Environmental Conditions: Applications will not be permitted during inclement weather or when air temperatures are below 40 degrees F or are expected to go below 40 degrees F within 24 hours after application, or when there is ice, frost, surface moisture or visible dampness on the roof deck.

7.2 Protection of Property:

7.2.1 Flame Heated Equipment: Flame heated equipment shall be located and used so as not to endanger the structure or other materials on the site or adjacent property. Flame heated equipment shall not be placed on the roof of any structure. Ample fire extinguishers shall be provided and maintained.

7.2.2 Protective Covering: Protective coverings shall be installed at all paving and building walls adjacent to hoist and kettles prior to starting the work. Protective coverings shall be lapped at least 6 inches, shall be secured against wind, and shall be vented to prevent collection of moisture on covered surfaces. Protective coverings shall remain in place for the duration of the roofing work.

7.2.3 Special Protection: Special protection shall be provided, or heavy traffic shall be avoided on completed work when ambient temperature is above 80 degrees F.

7.2.4 Damaged Work or Materials: Work or materials damaged during the handling of bitumen and the installation of materials shall be restored to original condition or shall be replaced with new materials.

7.2.5 Joints: Joints in deck shall be sealed as necessary, to prevent drippage of bitumen into building or down exterior walls.

7.3 Heating of Bitumen: Solid bitumen shall be broken up on a clean surface, free of dirt and debris, and shall be carefully heated in kettles so designed as to prevent direct contact of flame with surfaces in contact with the bitumen. Kettles shall be provided with visible thermometers and thermostatic controls set to the temperature limits specified. Controls shall be maintained in working order and shall be kept calibrated. Accurate "plus or minus two degrees" immersion thermometers shall be used frequently to check temperatures of the bitumen. When temperatures exceed maximums specified, the bitumen shall be rejected and removed from the site. Upon determination that the temperature of the bitumen, at the instant of application is below minimums specified, the affected roofing shall be removed and replaced. Cutting back, adulterating, or fluxing of bitumen, or prolonged storage at temperatures above storage temperatures specified will not be permitted.

7.3.1 Temperature Limits for Bitumens: Bitumens shall be heated within the following ranges:

Bitumen	Minimum Temp., °F	Best Range, °F	Maximum Temp., °F	Storage Temp., °F
Coal-tar pitch ASTM D450, Type A	300	325-375	400	350
Asphalt, ASTM D312, Type I	300	350-400	425	350
Asphalt, ASTM D312, Type III	350	400-430	475	425

7.4 Bitumen Stops: Bitumen stops shall be provided at roof edges, openings, and vertical projections prior to application of the roofing felts. Bitumen stops shall be formed with two 12-inch wide strips of ply felt. Strips shall be laminated with, and set into a bed of bituminous plastic cement with one half of the width overhanging the edge of the roof or opening. Where nailers are present, the strips, additionally shall be nailed with roofing nails spaced 12 inches o.c. After roof membrane is in place, the free portion of the strips shall be folded back over the roof membrane and embedded in a continuous bed of bituminous plastic cement. The gravel stop, where indicated, shall be embedded in bituminous plastic cement on top of the

envelope formed by the turn-back and shall be secured with compatible roofing nails spaced 3 inches o.c. Metal bitumen stops as specified in section entitled "Flashing and Sheet Metal" may be provided in lieu of the felt bitumen stops at the Contractor's option.

7.5 Base Sheets: Base sheets shall be applied with each sheet lapping 4 inches over the preceeding sheet. End laps shall not be less than 6 inches and shall be staggered a minimum of 12 inches. Unless otherwise recommended by roofing manufacturer, nail base sheet at expanded polystyrene aggregate roof fill on 9 inch centers 2 inches from edge lap and down the center of each sheet on 9 inch centers. All nailing shall be concealed by overlying sheets of roofing material.

7.6 Plying Felts: The application of plying felts shall be progressive and continuous (shingle fashion) and not split (or phased). Starter sheets of plying felts shall be provided to maintain the specified number of plies throughout the roof. Laps and starter sheet widths for 36-inch felts shall be as follows:

Number of plies	Laps (inches) 1	Starter sheet widths (inches)
3	24-2/3	12, 24, and 36

NOTE 1: End laps shall not be less than 6 inches and shall be staggered a minimum of 12 inches.

7.7 Water Cutoffs: Water cutoffs shall be provided to protect insulation at the end of each day's work or when rain or snow is imminent. Water cutoffs shall consist of two strips of plying felt applied to exposed edges of the insulation. The first strip shall extend 6 inches on the roof deck, carry up and over the insulation and roofing and extend 6 inches on top of the roofing. The second ply shall lap the first 3 inches on each side. Strips shall be hot mopped to the roof deck, the roofing felts, and to each other, but mopping shall be withheld from the exposed edges of the insulation. Before resuming the next day's application, the protective felts along the vertical edge of the insulation shall be cut, exposing the insulation.

7.8 Flashing: Built-up bituminous flashing shall be provided in the angles formed where roof decks abut walls, curbs, ventilators, pipes, and other vertical surfaces, and where necessary to make the work watertight. Flashing shall be installed after all plies of roofing have been applied but before the top surfacing is applied. Base flashing shall be built-up of inorganic felts. Cap flashing shall be metal as specified in another section.

7.8.1 Base Flashing: Built-up bituminous base flashing shall consist of 3 plies of AA15 felts. Each ply shall be embedded in a uniform trowelling of bituminous plastic cement not less than 1/16-inch thick. All felts shall be smoothed and pressed firmly into place so that a uniformly attached and completely laminated membrane results. Felts shall extend not less than 6, 9,

and 12 inches respectively over the roofing membranes beyond the toe of the cant and not less than 4 inches or more than 10 inches above the top of the cant on vertical surfaces. Ends of felts shall be lapped not less than 12 inches and shall be sealed watertight with bituminous plastic cement. End laps shall be staggered. Top edges of base flashing system shall be nailed to nailers with large head roofing nails through metal discs spaced not more than 10 inches o.c. on a line 1-1/2 inches below the top of the felts. The finished base flashing shall be heavily coated with bituminous plastic cement 1/8-inch thick, extending from one inch above the top of the flashing felts on the vertical surface to one inch beyond the edge of the flashing felts on the roof surface.

7.8.2 Strip Flashing: Flanges of sheet metal work to be incorporated into the roofing system shall be set into a uniform 1/16-inch minimum thick bed of bituminous plastic cement and shall be stripped-in with two layers of plying felt cemented to the top of the flanges and to each other with 1/16-inch beds of bituminous plastic cement. The felts shall extend 3 and 6 inches, respectively, beyond the edges of the flanges and shall cover the flanges.

7.8.3 Flashing at Roof Drain Sumps: Roof drains are specified in another section. Sumps shall be provided for roof drains, as indicated. Treated wood nailers shall be provided around the perimeter of sumps as indicated. Each sump shall be lined with two sheets of fabric membrane conforming to the requirements of ASTM D173. The two sheets shall be cemented in place and to each other with bituminous plastic cement not less than 1/16 inch thick for each coating. Each sheet shall be allowed to dry prior to the application of the succeeding sheet. The sheets shall extend 4 inches and 6 inches respectively beyond the edges of the sump on top of the roofing membrane. A prefabricated sump pan of 6-pound lead shall be provided under section entitled "Flashing and Sheet Metal". The edges of the pan shall form a gravel stop with a 4 inch flange. The flange shall be set on top of the extended edges of fabric membrane in a uniform 1/16-inch bed of bituminous plastic cement and nailed 3 inches o.c. to the wood nailer. The flange shall be stripped in with two layers of plying felt cemented to the top of the flange and to each other with 1/16-inch beds of bituminous plastic cement. The first layer of felt shall be 10 inches wide, and the second layer 12 inches wide. The fabric membranes and lead sump pan shall be neatly fitted, pressed into a heavy coat of bituminous plastic cement applied to the roof drain flange, and shall be securely clamped in the flashing clamping ring. Extreme care shall be taken to assure that clamped members are free from wrinkles and folds. Top surfacing shall not be applied until drain sump test requirements, specified herein, have been met.

7.9 Top Surfacing: Surfacing materials, in the quantities hereinbefore specified, shall be applied after felt flashings, and tests, repairs, and corrective action have been completed and approved.

7.9.1 Aggregate Surfacing: Aggregate surfacing shall consist of clean, dry aggregate, as specified hereinbefore, embedded in a flood coat of hot

bitumen poured from a dipper. Bitumen shall conform to the slope and temperature requirements specified herein. Aggregate shall be placed in a manner required to form a compact, embedded overlay. To aid, in proper embedment, aggregate may be lightly rolled, provided that there is no damage to the built-up roofing membranes. Surfacing aggregate shall not be embedded in areas over which protection courses or walkways are to be installed. Loose aggregate shall be swept up and removed from the roof.

7.10 Asphalt Planks: Asphalt planks shall be installed over roofing system where indicated and in accordance with manufacturer's directions. Install planks to provide proper drainage from back to front. Joints, if required, shall not be more than 1/2-inch. After the placing of the planks, top surfacing shall be completed up to all edges of the installed planks.

7.11 Clean-up: All debris, scraps, containers, and all other rubbish and trash resulting from the installation of the roofing system, shall be removed from the job site each day.

8. INFORMATION CARD: A typewritten card, framed under glass, in a weather-tight frame, shall be provided for each roof. This card shall contain the information listed on the sample roof data card. The card shall be installed near the point of access to the roof, as directed. A duplicate card shall be submitted to the Contracting Officer.

---END---

8.1 Sample Roof Data Card:

ROOFING AND SHEET METAL WORK

1. Contract Number	Date Work Completed
3. NAVFAC Specification Designation	
4. Type of Deck	
5. Slope of Deck	
6. Insulation a. Type	
b. Thickness	
c. Manufacturer's Name	
7. Felt Application a. Type	
b. Weight	
c. Method (hand or machine nailing)	
d. Manufacturer's Name	
8. Bitumen a. Type	
b. Quantity per square	
c. Manufacturer's Name	
9. Flashing a. Type	
b. Weight or Gage	
c. Manufacturer's Name	
10. Statement of Compliance or Exceptions	
Contractor's Signature	Date Signed
Inspector's Signature	Date Signed

SAMPLE COPY

(The Contractor shall provide a similar card typewritten and framed under glass with a weather tight frame. Install near the point of roof access as directed.)

SECTION 07600. FLASHING AND SHEET METAL

1. APPLICABLE PUBLICATIONS: The following publications of the issues listed below, but referred to elsewhere by basic designation only, form a part of this specification to the extent indicated by references thereto:

1.1 Federal Specifications:

O-F-506C	Flux, Soldering; Paste and Liquid.
HH-I-1030A & Am 1	Insulation Thermal (Mineral Fiber, for Pneumatic or Poured Application).
QQ-C-576B & Am 1	Copper Flat Products with Slit, Slit and Edgerolled, Sheared, Sawed, or Machined Edges, (Plate, Bar, Sheet and Strip).
QQ-L-201F & Am 2	Lead Sheet.
QQ-S-571E & Am 2	Solder; Tin Alloy; Lead-Tin Alloy; and Lead Alloy.
QQ-S-775E	Steel Sheets, Carbon, Zinc-Coated.
SS-C-153C	Cement; Bituminous, Plastic.
TT-S-227E & Am 3	Sealing Compound; Elastomeric Type, Two Component (For Calking, Sealing, and Glazing in Buildings and Other Structures).
TT-S-230C & Am 2	Sealing Compound; Elastomeric Type, Single Component (For Calking, Sealing and Glazing in Buildings and Other Structures).

1.2 Military Specification:

MIL-P-21035 & Am 1	Paint, High Zinc Dust Content, Galvanizing Repair.

1.3 American Society for Testing and Materials (ASTM) Publications:

A36-75	Structural Steel.
A366-72	Steel, Carbon, Cold-rolled Sheet, Commercial Quality.
B117-73	Salt Spray (Fog) Testing.
B209-77	Aluminum-Alloy Sheet and Plate.
B221-76a	Aluminum-Alloy Extruded Bars, Rods, Shapes, and Tubes.
D41-73	Primer for Use with Asphalt in Dampproofing and Waterproofing.
D1784-75	Rigid Poly (Vinyl Chloride) and Poly-1, 2 Dichloroethylene Compounds.
D2244-68	Color Difference of Opaque Materials.
D2247-68(1973)	Coated Metal Specimens at 100 Percent Relative Humidity.
D523-67(1972)	Specular Gloss.
D659-74	Chalking of Exterior Paints.
D968-51(1972)	Abrasion Resistance of Coatings of Paint, Varnish, Lacquer, and Related Products by the Falling Sand Method.

D1737-62(1973) Elongation of Attached Organic Coatings with Cylindrical Mandrel Apparatus.

1.4 American Welding Society Standards (AWS):

D1.1-75 (with 1976 & 1977 revisions) Structural Welding Code.

1.5 Sheet Metal and Air Conditioning Contractors National Association, Incorporated (SMACNA):

Architectural Sheet Metal Manual (1972).

2. QUALITY CONTROL: Approvals, except those required for field installations, field applications, and field tests, shall be obtained before custom fabrication is started and before delivery of materials or equipment to the project site.

2.1 Test Requirements for Coating System: Coating system specified herein shall meet the following test requirements:

2.1.1 Gloss: 30 ±5 reflectivity at 60 degrees according to ASTM D523.

2.1.2 Abrasion Resistance: Coefficient of abrasion of 67 minimum according to ASTM D968.

2.1.3 Pencil Hardness: "F" minimum.

2.1.4 Solvent Resistance: 100 Double MEK rules minimum.

2.1.5 Adhesion: No pick-off when tape tested over 1/16 inch crosshatch.

2.1.6 Salt-Spray: Few scattered blisters no larger than ASTM #4 according to ASTM B117 and no more than 1/16 creepage from areas scribed to bare metal after 500 hours.

2.1.7 Humidity Resistance: Few scattered blisters no larger than ASTM #4 according to ASTM D2247 after 1,000 hours.

2.1.8 Chalking Resistance: No greater than ASTM D659 number 8 rating according to ASTM D659 after exposure for 5000 hours in Sunshine Arc Weathermeter XWR using 60/60 cycle.

2.1.9 Color Change: No greater than 5 NBS units as determined in accordance with ASTM D2244 after removal of external deposits and after exposure for 5000 hours in Sunshine Arc Weatherometer XWR using 60/60 cycle.

2.1.10 Water Immersion: No pick-off when tape tested over crosshatch area after immersion in aerated distilled water 80 degrees ±10 degrees F after 500 hours.

2.1.11 Formability: No failure in adhesion or rupture of coating when tested according to ASTM D1737 withstanding 180 degree bend around 1/8 inch mandrel.

3. SUBMITTALS:

3.1 Tests and Certificates: The testing requirements for materials incorporated in referenced documents will be waived provided the Contractor submits certificates from the manufacturer stating that materials furnished for this project conform to all requirements of this specification and the referenced documents. Copies of the test reports need not be submitted except as specifically requested by the Contracting Officer.

3.1.1 Sample Certificate: The certificate shall not contain statements that could be interpreted to imply that the product does not meet all requirements specified, such as "as good as'; "achieve the same end use and results as materials formulated in accordance with the referenced specification"; "equal or exceed the service and performance of the specified material". The certificate should simply state that the product conforms to all requirements specified.

SAMPLE CERTIFICATE

The manufacturer hereby certifies that all following products being furnished for this project conform to all requirements of the project specifications and the respective reference specifications:

MANUFACTURER AND PRODUCT	REFERENCE SPECIFICATION
John Doe Company Galvanized Steel	ASTM A525

SIGNATURE AND TITLE

3.2 Shop Drawings: Shop drawings of all sheet metal items indicating thicknesses, dimensions, fastenings and anchoring methods, expansion joints, and other provisions necessary to provide thermal expansion and construction, shall be submitted and approved before delivery of material to the site.

3.3 Samples: Samples of the following materials shall be submitted and approved before delivery of the material to the site:

(a) Sealant Tape: Two feet length.

(b) Sheet Metal: Two samples of sheet and extruded aluminum with finish as specified.

4. REQUIREMENTS: The work includes metal flashing and sheet metal. Through wall flashing in masonry, flashings used in connection with composite metal siding, and preformed metal roofing are specified in other sections. Flashing and sheet metal work for Public Works Building is specified in section entitled "Preformed Metal Roofing and Fascia".

5. DELIVERY, HANDLING AND STORAGE: Materials shall be adequately packaged and protected during shipment and shall be inspected for damage, dampness, and wet-storage stains upon delivery to the job site. Damaged or permanently stained materials that cannot be restored to like-new condition shall be removed from the site and shall be replaced at no additional cost to the Government. Sheet metal items shall be handled carefully to avoid damage to surfaces, edges and ends. Crated materials shall not be uncrated until ready for use. Materials shall be stored in dry, weather-tight, ventilated areas until immediately before installation.

6. MATERIALS: Materials shall conform to the respective specifications and to the requirements specified herein. Sheet metal items shall be furnished in 8 to 10 foot lengths. Single pieces less than 8 feet long may be used to connect to factory fabricated inside and outside corners, and at ends of runs. Accessories and other items essential to complete the sheet metal installation shall be provided and shall be of the same material as the items to which they are applied.

6.1 Copper, Sheet and Strip: QQ-C-576, light cold rolled temper.

6.2 Lead Sheet: QQ-L-201, grade B, aluminum weight, 4 lbs. per square foot unless otherwise indicated or specified.

6.3 Steel Sheet, Zinc Coated (Galvanized): QQ-S-775, Type 1, Class d.

6.4 Aluminum Sheet: ASTM B209, alloy 3003, mill finish, except pre-finished where indicated.

6.5 Soldering Flux: O-F-506, Type 1, Form A or B.

6.6 Solder: QQ-S-571, composition Sn 50 for copper.

6.7 Polyvinyl Chloride Reglet: ASTM D1784, Type II, 0.075-inch minimum thickness.

6.8 Prefabricated Waterdam and Fascia:

6.8.1 Fascia: Extruded from .125 inch thick 6063-T5 aluminum alloy conforming to ASTM B221, prefinished where indicated.

6.8.2 Rocker Flashing: Sheet aluminum, .032 inch thick, 3003-H14 alloy conforming to ASTM B209.

6.8.3 Water Dam: Steel sheet, zinc-coated, 20 gage conforming to QQ-S-775, Type I, Class d.

6.8.4 Screws: Stainless steel No. 12 by 1-inch pan head, Type A sheet metal with neoprene bonded to stainless steel washer.

6.9 Sealant Tape: A 100% solids, polyisobutylene-butyl preformed sealant.

6.10 Membrane Waterproofing Envelope: Reinforced flexible flashing composed of two 25-mil layers of a specially compounded plasticized polymeric vinyl fused together through a 10 by 10 woven glass fiber reinforcement in between the two layers. Adhesive for joints shall be as recommended by the membrane waterproofing envelope manufacturer.

6.11 Loose Fill Insulation: Loose fill insulation installed in membrane waterproofing envelope shall conform to HH-I-1030, Type II, Class A.

6.12 Bituminous Plastic Cement: SS-C-153, Type I with asphalt roofing felts and Type II with coal-tar roofing felts.

6.13 Asphalt Primer: ASTM D41.

6.14 Fasteners: Fasteners shall be the same metal or a metal compatible with the item fastened. Bronze, brass, or hard copper shall be used to fasten copper materials; aluminum fasteners shall be used with aluminum; and stainless steel fasteners shall be used to fasten dissimilar materials.

6.15 Sealant or Calking Compound: TT-S-227, Type II or TT-S-230, Type II.

7. FINISH COATING: Finish coating on all exposed surfaces of sheet metal, where indicated, shall be a polyvinylidene fluoride (PVF_2) coating based on fluorocarbon resins. The percent of fluorocarbon resin shall be not less than 70 percent. After pretreatment of metal substrate as prescribed by coating manufacturer, apply by roll-coating or spray-coating one coat of zinc-chromate epoxy primer yielding approximately 0.2 mil dry film thickness. Oven bake primer in accordance with manufacturer's directions. Following application of prime coat, apply by roll-coating or spray coating one coat of polyvinylidene fluoride to yield a minimum of 0.8 mil dry film thickness. Cure finish coat in oven at approximately 600 degrees F. Finish color shall be black. Coat unexposed surfaces of sheet metal with manufacturer's standard epoxy primer.

8. FABRICATION: Sheet metal items shall be fabricated to the thickness shown in Table I and multiple lengths of items shall be joined together as shown in Table II.

9. INSTALLATION: Surfaces to receive sheet metal shall be plumb and true, clean, even, smooth, dry and free from defects and projections which

might affect the application. Installation of items not shown in detail or not covered by specifications shall meet the applicable requirements of the SMACNA's "Architectural Sheet Metal Manual". Joints used in installation of flashing and sheet metal shall be as specified in Table II, except as specified otherwise.

9.1 Workmanship: Sheet metal work shall be installed with lines, arrises, and angles sharp and true. Exposed surfaces shall be free from visible wave, warp, and buckle, and tool marks. Exposed edges shall be folded back neatly to form a 1/2-inch hem on the concealed side. Sheet metal exposed to the weather shall be watertight with provisions for expansion and contraction.

9.2 Nailing: Nailing shall be confined generally to sheet metal having a width of less than 18 inches, except as indicated or specified otherwise. Nailing of flashings shall be confined to one edge only. Nails shall be evenly spaced not over 3 inches on centers and approximately 1/2-inch from edge unless otherwise specified or indicated. Face nailing will not be permitted. Where sheet metal is applied to other than wood surfaces, detailed shop drawings shall include locations for sleepers and nailing strips required to properly secure the work. Sleepers and nailing strips are specified in another section.

9.3 Cleats: Cleats shall be provided for sheet metal where indicated and shall be continuous. Cleats shall be of the same material and thickness as the sheet metal being installed. Cleats shall be secured with nails spaced 4 inches on centers and the cleat folded back over the nailheads. The other end shall be locked into the seam.

9.4 Bolts, Rivets, and Screws: Bolts, rivets, and screws shall be installed where indicated or required. Compatible washers shall be provided where required to protect surface of sheet metal and to provide a watertight connection.

9.5 Seams: Seams shall be straight and uniform in width and height. Solder shall not show on the face.

9.5.1 Flat-lock Seams: Flat-lock seams shall finish not less than 3/4-inch wide.

9.5.2 Lap Seams: Lap seams, when soldered, shall finish not less than one inch wide. Lap seams, not soldered, shall overlap not less than 3 inches.

9.5.3 Loose-lock Expansion Seams: Loose-lock expansion seams shall be not less than 3 inches wide, and shall provide not less than one inch movement within the joint. Joint shall be completely filled with sealant, applied at not less than 1/8-inch thick bed.

9.5.4 Flat Seams: Flat seams shall be made in the direction of the flow.

9.6 Soldering, Welding and Mechanical Fastening: Where soldering is specified herein it shall apply to copper items. Welding is specified for mill finish aluminum of thickness greater than 0.040-inch. Where mechanical fastening is specified for aluminum, it shall apply to aluminum 0.040-inch or less in thickness unless otherwise specified. Aluminum 0.040-inch or less in thickness shall either be lapped for expansion joints or lock-joined, mechanically fastened, and filled with sealant as recommended by the aluminum manufacturer.

9.6.1 Soldering: Edges of copper shall be pretinned before soldering is begun. Soldering shall be done slowly with well heated soldering irons so as to thoroughly heat and completely sweat the solder through the full width of the seam. Soldering shall follow immediately after application of the flux. Upon completion of soldering, the acid flux residue shall be thoroughly cleaned from the sheet metal with a solution of washing soda in water and rinsed with clean water. Joints in aluminum sheets 0.040-inch or less in thickness shall be made mechanically and sealed with the sealant specified. Aluminum shall not be soldered.

9.6.2 Welding of Aluminum: Joints in mill finish aluminum sheets more than 0.040-inch thick shall be welded. Welding shall be of the inert-gas, shield-arc type. The procedures, the appearance and quality of welds made, and the methods used in correcting welding work shall conform to AWS Standard D1.1.

9.6.3 Mechanical Fastening of Aluminum: No. 12 aluminum alloy sheet metal screws or other suitable aluminum alloy or stainless steel fasteners driven in holes made with a No. 26 drill, shall be used in securing side laps, end laps and flashings. Maximum spacing for fasteners shall be 12 inches O.C. Where end lap fasteners are required to improve closure, they shall be located not more than 2 inches from the end of the overlapping sheet.

9.7 Protection from Contact of Dissimilar Materials:

9.7.1 Copper: Copper coming in contact with dissimilar metal shall be painted with heavy-bodied bituminous paint, or shall be separated by means of moisture proof building felts.

9.7.2 Aluminum: Aluminum shall not contact other metals except zinc or zinc coating. Where aluminum contacts another metal, the dissimilar metal shall be painted with a prime coat of zinc-chromate primer followed by two coats of aluminum paint.

9.7.3 Metal: Metal in contact with mortar, concrete, or other masonry materials shall be painted with alkali-resistant coatings such as heavy-bodied bituminous paint.

9.7.4 Wood: Wood or other absorptive materials that may become repeatedly wet and in contact with metal shall be painted with two coats of aluminum paint or a coat of heavy-bodied bituminous paint.

9.7.5 Dissimilar Metal: Dissimilar metal shall be painted with a non-lead-pigmented paint if drainage from it passes over aluminum.

9.8 Provision For Expansion And Contraction: Expansion and contraction joints shall be provided at not more than 40-foot intervals, except as specified otherwise. Where the distance between the last expansion joint and the end of the continuous run is more than half the required interval spacing an additional joint shall be provided. Joints shall be evenly spaced. Extruded aluminum waterdam and fascia shall be joined by expansion and construction joints at not more than 12 foot spacings. Sheet aluminum shall be provided with expansion and contraction joints at not more than 32 foot intervals.

9.9 Counterflashing: Except where indicated or specified otherwise, counterflashing shall be inserted in reglets located from 9 to 10 inches above roof decks and shall extend down vertical surfaces over upturned vertical leg of base flashings not less than 3 inches. Exposed edges of counterflashing shall be folded 1/2-inch. Where stepped counterflashings are required, they may be installed in short lengths or may be of the preformed one-piece type. End laps in counterflashings shall be not less than 3 inches and shall be made weathertight with plastic cement. Lengths of metal counterflashings shall not exceed 10 feet. The flashings shall be formed to the required shapes before installation. Corners shall be formed to the required shapes before installation. Corners shall be factory formed with joints not less than 12 inches from the angle. Flashings shall be secured in the reglets with lead wedges spaced not to exceed 18 inches apart; on short runs, wedges shall be placed closer together. Calked-type reglets or raked joints which receive counterflashings shall be filled with calking compound. The concealed edge of counterflashings built into masonry or concrete walls shall be turned up not less than 1/4-inch and shall extend not less than 2 inches into the walls. Counterflashing shall provide a spring action against base flashing.

9.10 Metal Reglets: Metal reglets shall be of the calked type or of the friction type.

9.10.1 Calked-type Reglets: Calked-type reglets shall have rounded edges and metal strap brackets or other approved anchors for securing to the concrete forms. They shall be provided with an approved type core to protect them from injury during the installation. Built-up mitered corner pieces shall be provided for internal and external angles. Flashing shall be wedged in the reglets with lead wedges every 18 inches and shall be calked full and solid with an approved compound.

9.10.2 Friction-type Reglets: Friction-type reglets shall have flashing receiving slots not less than 5/8-inch deep and one-inch jointing tongues and shall be provided with upper and lower anchoring flanges. The flashing shall

be inserted the full depth of the slot and locked therein by indentations made with a dull-pointed tool.

9.11 Polyvinyl Chloride Reglets: Rigid polyvinyl chloride reglets may be provided in lieu of metal reglets, at the Contractor's option.

9.12 Gravel Stops and Roof Edge Fascias: Gravel stops and fascias shall be prefabricated in the shapes and sizes indicated and in lengths not less than 8 feet with 1/2-inch joints for expansion and contraction. Flange shall extend onto roof deck as indicated. Prefabricated mitered corners shall be provided for internal and external corners. Gravel stops and fascias shall be installed after all plies of the roofing membrane have been applied, but before the flood coat of bitumen is applied. The roof flange of gravel stops and fascias shall be primed both sides with an asphalt primer. After primer has dried, the flange shall be set on top of the roofing felts in a 1/8-inch thick bed of plastic cement. The flange shall be nailed securely to wood nailer with large-head roofing nails 1-1/2 inches long spaced not more than 3 inches on centers. Strip flashing of flanges is specified in section entitled "Built-up Roofing". The lower edge of fascias shall be hooked at least 3/4-inch over a continuous hook strip of the same material bent outward at an angle of 45 degrees to form a drip. The hook strip shall be nailed to wood nailer at 4 inches maximum on centers. Where fastening is made to concrete or masonry, screws spaced 12 inches O.C. shall be used and shall be driven in expansion shields set in the concrete or masonry. Where necessary, hook strips shall be installed over 1/16-inch thick compatible spacer or washers. Cover joints of gravel stops and fascia with an 8-inch wide cover plate. Under cover plate lay strips of 1/8-inch thick by 1-inch wide sealant tape, located 1/2-inch behind each edge of cover and between cover plate and gravel stops and fascia. Fill remaining 1/2-inch space on each side of cover plate with sealant as specified herein. Face nailing will not be permitted. Extruded aluminum gravel stops and fascias shall be installed in accordance with the manufacturer's instructions.

9.13 Gutters: The gutters shall be the hung type and of the shape indicated. Gutters shall be supported on underside by brackets that permit free thermal movement of the gutter. Gutters shall be provided in sizes indicated complete with mitered corners, end caps, outlets, brackets, and other accessories necessary for installation. The outer edge of gutter shall be beaded or reinforced with a stiffening bar indicated of material compatible with gutter. Gutters shall be fabricated in sections not less than 8 feet long. The sections shall be lapped a minimum of one inch in the direction of flow. Aluminum gutters shall be joined with riveted sealed joints. Expansion-type slip joints shall be provided midway between outlets. Gutters shall be installed below the slope line of the roof so that snow and ice can slide clear. Gutters shall be supported on approved type adjustable hangers spaced not more than 30 inches on centers. Gutters shall be adjusted to slope uniformly to outlets, with high points occurring midway between outlets. Hangers and fastenings shall be fabricated from metals compatible with the gutters.

9.14 Downspouts shall be of flat metal, of the shapes and sizes indicated, and shall be provided complete including elbows and offsets. Downspouts shall be provided in approximately 10-foot lengths; end joints shall telescope not less than 1-1/2 inches, and longitudinal joints shall be locked. Gutter outlets shall be provided with wire ball strainers of a standard type for each outlet. Strainers shall fit tightly into outlets and shall be of the same material used for gutters. Downspouts shall be kept not less than one inch away from walls and shall be fastened to the walls at top, bottom and at not to exceed 5 foot centers intermediately between, with approved type leader straps or concealed rack-and-pin type fasteners; straps and fasteners shall be formed from metal compatible with the downspouts. Downspouts terminating in splash blocks shall be provided with elbow-type fittings. Concrete splash blocks are specified in another section.

9.15 Sumps for Roof Drains: Roof drains are specified in another section. Sumps 30 inches square shall be provided for roof drains. A prefabricated pan of 6 pound lead shall be set in a full bed of plastic cement in fabric lined sump specified in section entitled "Built-up Bituminous Roofing". The edges of the pan shall form a gravel stop with a 4 inch flange. The flange shall be set on top of the roofing felts in a bed of plastic cement and nailed 3 inches on center to a wood nailer. Strip flashing of flanges is specified in section entitled "Built-up Bituminous Roofing". The flashing ring on the drain shall be heavily coated with plastic cement before the membranes and the pan are installed. The membranes and the sump pan shall be clamped securely in the flashing clamping ring. Sumps shall be tested for leaks before roofing work is completed.

9.16 Scuppers: The interior of scupper openings shall be lined with sheet metal. The lining shall extend through and project outside of the wall to form a drip on the bottom edge and shall be formed to return not less than one inch against the face of the outside wall at the top and sides. Outside edges shall be folded 1/2-inch on all sides. The perimeter of the lining shall be approximately 1/2-inch less than the perimeter of the scupper. The top and sides of the lining on the roof deck side shall be jointed to a closure flange by a locked and mechanically fastened joint. The bottom edge shall be jointed by a locked and mechanically fastened joint to the closure flange. Provide gravel stop as indicated. Surfaces to receive the scupper lining shall be primed and coated with bituminous plastic cement. Joints in aluminum shall be mechanically fastened and sealed.

9.17 Equipment Support Cover Caps: Caps shall be of design indicated. Cleats shall be continuous.

9.18 Flashing at Roof Penetrations and Equipment Supports: Metal flashing shall be provided for all pipes, ducts, and conduits projecting through the roof surface and for equipment supports, and similar items supported by or attached to the roof deck.

9.18.1 Single Pipe Vents at Built-up Roofing shall be flashed with a 4 lb. minimum lead sleeve having a 6 inch flange. Flange shall be set in

bituminous plastic cement and nailed 3 inches O.C. Top of sleeve shall be bent over and extended down into the vent pipe a minimum of 2 inches. For long runs or long rises above the deck, where it is impractical to cover the vent pipe with lead, a two-piece formed metal housing of the specified sheet metal shall be used. Metal housing shall consist of a metal sleeve having a minimum 4-inch roof flange set in bituminous plastic cement and nailed 3 inches O.C. Sleeve shall extend a minimum of 8 inches above the roof deck and shall be lapped a minimum of 3 inches by a metal hood secured to the vent pipe by a draw band. Area of hood in contact with vent pipe shall be sealed with sealant. Bitumen stops shall be copper.

9.19 Metal Bitumen Stops: Metal bitumen stops may be provided at eaves in lieu of felt bitumen stops that are specified in section entitled "Built-up Roofing" at the Contractor's option. Bitumen stops shall be either (a) the rigid type with a 3/4-inch minimum vertical leg extending up into the gravel stops or (b) the folded type with a 3-inch minimum vertical leg folding back over the roofing felts. Bitumen stops in the form of a vertical sleeve minimum 3 inches high unless otherwise indicated with flange shall be provided for all pipes projecting through roof. Horizontal flanges of bitumen stops shall be not less than 5 inches wide. Prior to installation of roofing felts, bitumen stops shall be nailed to wood nailers at not more than 3 inches on centers.

9.20 Coping: Install coping in 8 to 10 foot lengths with 1/2-inch joints for expansion and contraction. Cover joints in coping with a 6-inch wide cover plate. Under cover plate lay strips of 1/8-inch thick by 1-inch wide sealant tape, located 1/2-inch behind each edge of cover and between cover plate and coping. Fill remaining 1/2-inch space on each side of cover plate with sealant specified herein. The lower edges of copings shall be hooked at least 3/4-inch over a continuous cleat of same material bent outward at an angle of 45 degrees to form a drip. The cleat shall be nailed to wood nailer at 4-inches on centers maximum.

9.21 Column, Beacon Light Support, and Remote Cooler Flashing: Fabricate umbrella from 12 gage steel sheet, zinc-coated (galvanized). Fabricate flange from 16 ounce copper. Flanges shall be set into a heavy coating of bituminous plastic cement applied over roofing felts and shall be nailed 3-inches on centers and shall be stripped flashed into the roofing system. Clamping band shall be 1/4-inch by 1-1/2-inch bar fabricated from ASTM A36 steel. Clamping bolt shall be 3/8-inch diameter hex head machine bolt. Provide neoprene gasket as indicated. Joints in umbrella shall be welded in accordance with AWS D1.1. Joints in flange shall be soldered. Clean welds by chipping or wire brushing. Welds, cut edges, and damaged portions of zinc-coatings shall be coated with paint conforming to MIL-P-21035.

9.22 Roof Expansion Joints: Wood blocking, nailers, and plywood are specified under section entitled "Rough Carpentry". Lap joints of envelope 6-inches and seal with adhesive. Fill envelope with insulation and nail to top of wood nailers with nails spaced 6-inches on centers. Install metal

cover in 8 to 10 foot lengths. At roof to roof expansion joints allow 1/2-inch in metal cover for expansion and contraction, and cover joints with close fitting 6-inch wide cover plates. Under cover plate lay strips of 1/8 inch thick by 1-inch wide sealant tape, located 1/2-inch behind each edge of cover and between cover plate metal expansion joint cover. Fill remaining 1/2-inch space on each side of cover plate with sealant specified herein. At roof to wall expansion joints, lap joints 4-inches and fill with plastic cement. Compressible filler where indicated shall be polyethylene foam, sheet type. Where indicated, the lower edges of joint covers shall be hooked at least 3/4-inch over a continuous cleat of same material bent outward at an angle of 45 degrees to form a drip. The cleat shall be nailed to wood nailers at 4-inches on centers.

9.23 Stack Hoods: Fabricate metal stack hoods from 12 gage sheet steel conforming to ASTM A366. Joints in hood shall be welded in accordance with AWS D1.1. Clean welds by chipping or wire brushing.

9.24 Metal Base Flashing: Metal base flashings shall be in lengths not less than 8 feet long. Top of metal base flashing, behind gravel stop, shall be nailed to wood nailers with nails spaced a minimum of 4 inches on centers. Extend bottom of metal base flashing a minimum of 2 inches onto top of roofing system.

10. CLEANING: All exposed sheet metal work shall be cleaned at completion of installation. Grease and oil films, handling marks, contamination from steel wool, filings and drilling debris shall be removed, and the work scrubbed clean. All exposed metal surfaces shall be free of dents, creases, waves, scratch marks, and solder or weld marks.

11. REPAIRS TO FINISH: Scratches, abrasions, and minor surface defects of finish shall be repaired in accordance with the manufacturer's printed instructions and as approved. Finish repaired surfaces shall be uniform and free from scratches, blemishes, and from variations of color and surface texture. Where items have factory finish damaged, repair in accordance with manufacturer's touch-up system. Repaired surfaces not acceptable shall be replaced without expense to the Government.

---END---

TABLE I. SHEET METAL MINIMUM THICKNESSES

Item Description	Aluminum, inch
Roof expansion joints:	
Cover cap	.040
Downspouts and leaders	.040
Downspout clips and anchor	.040 clip .125 anchor
Downspout straps, 2-inch	.060
Downspout heads	.040
Scupper lining	.040
Strainers, wire diameter or gage	.144 dia.
Flashings:	.040
Base	.040
Cap (Counterflashing)	.040
Gravel stops and fasciae:	
Extrusions	.125
Sheets, smooth	.040
Edge strip	.040
Gutters:	
Gutter section	.040
Continuous cleat	.040
Hangers, dimensions	1"x.080"
Cover plates	.040
Coping	.040
Equipment Support Cover Caps	.040
Bitumen stops:	
Rigid	.040
Folded	.040

TABLE II. SHEET METAL JOINTS

Item Designation	Type of Joint: Aluminum	Remarks
Joint cover for building expansion joint at roof.	As specified	---
Flashings:		
base	one-inch flat locked, sealed 3-inch lap for expansion joint,	Aluminum producer's recommended hard setting sealant for locked aluminum joints. Each expansion joint for all metals shall be filled with a joint sealing compound.
cap (in reglet)	3-inch lap.	Seal groove with calking compound (a)
reglets	---	Seal reglet groove with calking compound (a)
Edge strip	Butt.	---
Gravel stops:		
Extrusions	Butt with 1/2-inch space.	Use sheet flashing beneath and a cover plate.
Sheet, smooth	As specified	--
Gutters	One-inch flat locked, riveted and sealed.	Aluminum producer's recommended hard setting sealant for locked aluminum joints.

(a) Polyvinyl chloride type reglet shall be sealed with manufacturer's recommended sealant.

SECTION 07810. SKYLIGHTS

1. APPLICABLE PUBLICATIONS: The following publications of the issues listed below, but referred to thereafter by basic designation only, form a part of this specification to the extent indicated by the references thereto:

1.1 Federal Specifications:

TT-P-38D & Am 1	Paint, Aluminum, Ready-mixed.
TT-S-001543A (COM-NBS)	Sealing Compound: Silicone Rubber Base (For Calking, Sealing and Glazing in Buildings and Other Structures).

1.2 Military Specification:

MIL-C-184801 & Am 3	Coating Compound, Bituminous Solvent, Coal Tar Base.

1.3 American Society for Testing and Materials (ASTM) Publications:

B209-77	Aluminum Alloy Sheet and Plate.
B221-76a	Aluminum Alloy Extruded Bars, Rods, Wire, Shapes, and Tubes.
D638-76	Tensile Properties of Plastics.
D695-69	Compressive Properties of Rigid Plastics.
D790-71	Flexural Properties of Plastics and Electrical Insulating Materials.

1.4 American Welding Society (AWS) Publications:

D1.1-75 (With 1976 & 1977 Revision)	Structural Welding Code.

1.5 Architectural Aluminum Manufacturers' Association (AAMA) Publication:

602.2	Specifications - Laboratory Qualifying Procedure for Temporary Clear Protective Coatings for Aluminum.

1.6 National Association of Architectural Metal Manufacturers (NAAMM) Publications:

FC-1-69	Standard Field Check for Water Leakage of Metal Curtain Walls.
	Metal Finishes Manual (Finish Designation), August, 1969.

2. QUALITY CONTROL: Approval, except those required for field installations, field applications and field tests, shall be obtained before custom fabrication is started and before delivery of material or equipment to the project site.

3. SUBMITTALS:

3.1 Shop Drawings: Shop drawings of skylights shall be submitted to and approved by Contracting Officer before work is started. Drawings shall show sizes, locations, metal gages, hardware provisions, installation details, and other details of construction.

3.2 Samples: Label and submit samples in accordance with requirements specified herein. Submit samples in duplicate unless otherwise specified. Approval of samples must be obtained before proceeding with fabrication. Metal samples, complete with color and finish specified, shall be submitted to and approved by the Contracting Officer.

3.2.1 Corner section sample of skylight framing members showing fasteners, acrylic panels and glazing materials. One sample required, not less than 12 inches by 12 inches overall size.

3.2.2 Samples of intermediate section of skylight framing members showing jointing methods at intersections, fasteners, glazing methods, glazing materials and acrylic panels. One sample required, not less than 12 inches by 12 inches overall size.

3.2.3 Two 6-inch long samples of extrusions and sheet aluminum with specified finish.

3.2.4 Sealing compounds and joint backing materials.

3.2.5 Acrylic panels, each type and thickness, 4 inches by 6 inches size.

3.2.6 Glazing materials, each type.

3.2.7 Samples of accessory items as specified.

3.3 Descriptive Literature: Manufacturer's descriptive literature shall be submitted to the Contracting Officer for approval along with samples and shall consist of detail specifications, available performance test data and instruction for application, cleaning and maintenance.

3.4 Manufacturer's Installation Procedures: Manufacturer's currently recommended installation procedures for items shall be submitted to the Contracting Officer for approval in triplicate. Installation procedures shall accompany the shop drawings.

3.5 Certificates of Conformance of Compliance: Before delivery of skylights, certificates, in triplicate, attesting that all items and accessories meet the requirements specified shall be submitted to the Contracting Officer for approval.

4. GENERAL REQUIREMENTS:

4.1 The skylight system shall consist of framing members of shapes indicated on project drawings. The methods of glazing shall be provided as indicated on drawings and specified. All concealed auxiliary members, anchors, attachments and fastening devices for securing the skylights to the structure shall be provided.

4.2 Related Items: The following related items are specified in other sections of the specification:

a. Structural building supports.
b. Roofing.
c. Installation of metal reglets and built-in inserts in masonry and concrete.

4.3 Design: Skylights shall be designed to withstand the following loads:

a. Live Load:

(1) Single Glazed Units: 26 psf.
(2) Double Glazed Units:

(a) Exterior Panel: 37 psf.
(b) Interior Panel: 16 psf.

b. Gross Wind Uplift:

(1) Single Glazed Units: 53 psf.
(2) Double Glazed Units:

(a) Exterior Panel: 67 psf.
(b) Interior Panel: 24 psf.

4.4 Thermal Movement: The skylight shall be constructed with adequate provisions made for expansion and contraction of the component parts of the system and its fastenings to prevent harmful damage caused by buckling, failure of joint seals, breakage of acrylic panels, undue stress on fastenings or other detrimental effects. For design purposes, the provisions for thermal movement shall be based on assumed ambient temperature range of 150 degrees F.

5. DELIVERY AND STORAGE:

5.1 Materials delivered to the site shall be inspected for damage, unloaded and stored with a minimum of handling. The storage spaces shall be in dry locations with adequate ventilation, free from heavy dust, not subject to combustion products or sources of water, not exposed to damage, and shall permit easy access for inspection and handling.

5.1.1 Materials shall be stored neatly on the floor, properly stacked on non-absorptive strips or wood platforms. Store fabricated members on lower end or edge in upright position with non-absorptive strips between adjacent parts. Protect members by clean, loose-fitting tarpaulins or plastic sheet covers hung on a temporary frame so that air can circulate between parts to avoid condensation. Stainless steel and aluminum with applied protective tape or other strippable coatings shall not be stored outside where it will be exposed to sunlight or subject to climatic changes for long periods.

5.1.2 Sealing compounds shall be delivered to the job site in sealed containers labeled to show the designated name, formula or specification number; lot number; color, date of manufacture; shelf life; and curing time when applicable at the standard conditions for laboratory tests.

6. MATERIALS:

6.1 Framing: Framing members shall be extruded of 6063-T6 aluminum conforming to ASTM B221. Framing members shall be of size and thickness to adequately withstand the design loads specified herein. Aluminum glazing members and clamping bars shall incorporate the provision for a positive stop of engagement between the members when assembled to provide optimum compression of the glazing tape and to prevent possible over-torquing and stripping of clamping bar screws.

6.2 Flashing: Flashing shall be aluminum sheet conforming to ASTM B209, of the required alloy and temper to make it compatible with finish. Flashing shall be .040 inch thick minimum; cleats for attachment of flashing shall be .063 inch thick.

6.3 Acrylic Panels: Acrylic glazing panels shall be cold formed cast acrylic sheet. All glazing panels shall be thicknesses to meet the design criteria specified hereinbefore. Panels shall be free of scratches and other blemishes. Color of panels shall be as indicated. Mechanical properties shall conform to the following:

a. Tensile Strength (ASTM D638): 10,500 psi.

b. Flexural Strength (ASTM D790): 14,900 psi.

c. Compressive Strength (ASTM D695): 17,900 psi.

d. Modulus of Elasticity (ASTM D695): 427,000 psi.

6.4 Glazing Tape: Glazing tape shall be preformed butyl sealant tape, formulated from 100 percent solids. Glazing tape shall be self-adhering, non-staining and shall have a serviceability range of -40 degrees F. to 200 degrees F. Color of tape shall be black.

6.5 Glazing Gaskets: Gasketing shall be continuous extruded neoprene with the following characteristics:

a. Hardness (Shore A): 50 durometer.

b. Tensile Strength: 2,000 psi.

c. Elongation: 450 percent, minimum.

6.6 Sealant: Sealant shall be one-part silicone conforming to Federal Specification TT-S-001543, Class A.

6.7 Fasteners:

6.7.1 Fasteners for attachment of exterior caps shall be stainless steel. Fasteners shall be oven-baked to provide a dark finish which will blend with the finish of aluminum framing.

6.7.2 Fasteners for attachment of aluminum glazing bars to tubular aluminum rafters, and for connections between tubular aluminum framing members shall be stainless steel roll pins.

6.7.3 Fasteners for connections between I-beam framing members, and for attachment to steel supports shall be cadmium plated steel.

6.8 Bituminous Paint: Bituminous paint shall be a heavy-bodied bituminous coating compound conforming to Military Specification MIL-C-18480.

6.9 Aluminum Paint: Aluminum paint shall conform to Federal Specification TT-P-38.

6.10 Base Plate for Lightning Protection: Fabricate to sizes and shapes shown from aluminum plate conforming to ASTM B209. Provide all required fasteners for installation; design fasteners to conform to design requirements specified herein.

7. ALUMINUM FINISH: Exposed aluminum surfaces, including base plate for lightning protection, shall have a AA-M10-C22-A42 color anodized finish in accordance with the requirements of NAAMM's "Metal Finishes Manual". Finish color shall be black. Finish shall match in appearance or fall within the two extremes of color range of the approved samples.

8. CONSTRUCTION:

8.1 General: Skylights shall be constructed using the puttyless glazing system employing all extruded aluminum members. Skylights shall have a continuous extruded aluminum curb with expansion joints located as required. Insofar as practicable, fitting and assembly of the work shall be done in the manufacturer's shop. Work which cannot be permanently shop assembled shall be completely assembled, marked and disassembled before shipment to the jobsite to assure proper assembly in the field.

8.2 Tubular Rafters: Tubular rafters for single glazing system shall be extruded aluminum and shall have provisions for connections between members with concealed connector devices.

8.3 I-Beam Rafters and Glazing Bars: I-beam rafters for double glazing system and glazing bars for single glazing system shall be extruded aluminum and shall be designed for snap-in type neoprene gaskets. Members shall have condensation gutters as a portion of the bottom flange. Glazing bars shall be attached to tubular rafters with stainless steel roll pins spaced a maximum of 24 inches on centers.

8.4 Caps: All caps shall be of extruded aluminum. Their attachment shall be accomplished with all stainless steel fasteners into a system of alternate serrations. The stainless steel fasteners shall be located at a maximum of 9 inches on center.

8.5 Welding: All welding shall be by the heliarc process with all exposed welds ground smooth.

8.6 Waterproofing: Waterproofing shall be done by means of a continuous neoprene gasket applied above and below the acrylic panels. In addition, glazing tape shall be applied to the cap behind the gaskets. A continuous neoprene spacer shall be used at the top flange of the extruded aluminum curb for proper bearing of acrylic panels. A gasket washer shall be used beneath the heads of all fasteners at the exterior caps. Neoprene spacers shall be used at all extrusions for glass separation. At no point shall acrylic panels come in contact with metal parts of the skylight.

8.7 Sealing and Weeping: A continuous bead of sealant shall be applied between flashing and framing members. The skylight shall have weep holes located at the lower portion of the extruded aluminum curb bar at each rafter connection for drainage of condensation to the exterior.

9. FABRICATION AND WORKMANSHIP:

9.1 General: All parts of the skylight and components shall be of the materials shown on project drawings and specified. The details indicated are representative of the required design and profiles. Unless specifically indicated or specified, the methods of fabrication and assembly shall be at the discretion of the manufacturer. Shop assembled components shall be marked

to correspond with shop drawings for placement location and erection at the project site. Anchorage devices shall permit adjustment in three directions. Exposed fastenings used on finished surfaces shall be flat head counter sunk screws or bolts.

9.2 Joints: Joints between members shall be made by welding or mechanical fastening as indicated or specified. Where welded joints are required, substitution of mechanical fastening will not be permitted. Joints in exposed work shall be carefully matched to produce continuity of line and design. All weld beads on exposed metal surfaces shall be ground and mechanically finished to minimize mis-match and to blend with finish on adjacent parent metal. If flux is used in welding aluminum, it shall be completely removed immediately upon completion of the welding operation. Bed-joints or rabbets receiving sealant shall not be less than 3/4-inch deep by 3/8-inch wide at normal temperatures.

9.3 Welding: All welding shall be performed in accordance with AWS D1.1, using the methods and electrodes as recommended by the manufacturers of the base metal alloys being used. In addition, welds shall be made only by operators who have been previously qualified in accordance with AWS D1.1 to perform the type of work required.

9.4 Ventilation and Drainage: A system of internal ventilation and drainage by weeps or the principals of pressure equalization shall be provided in the skylight to ventilate internally and to discharge condensation and water leakage to exterior as inconspicuously as possible. Flashings and other materials used internally shall be non-staining, non-corrosive and non-bleeding.

10. QUALIFICATIONS OF FABRICATORS: The manufacturer and fabricator shall be a firm having adequate staff, plant, apparatus, equipment and experience to perform their work under completely controlled processes and tests and to assure uniform work of excellent quality. The fabrication, installation and glazing of the skylights shall be performed by the manufacturer or fabricator who specializes in performing work of the type described herein.

11. PROTECTION AND TREATMENT OF METALS:

11.1 General: Before finishing, metal surfaces shall have all lubricants used in the fabrication removed and be cleaned of other extraneous material. Exposed surfaces of framing and flashing shall be protected during fabrication, transportation and erection against scratches, splashes of mortar, paint or other defacements.

11.2 Galvanic Action: Protection against galvanic action shall be provided wherever dissimilar metals are in contact, except in the case of aluminum in permanent contact with galvanized steel, zinc, stainless steel or relatively small areas of white bronze. This protection shall be provided by painting the contact surfaces with a coat of heavy-bodied bituminous paint conforming to Military Specification MIL-C-18480, or by the application of an

appropriate calking material or non-absorptive tape or gasket between the contact surfaces. If painting is used to avoid contact of aluminum with dissimilar metals, paint only the dissimilar metal.

11.3 Protection for Aluminum: Aluminum which is placed in contact with, built into, or will receive drainage from masonry, lime mortar, concrete or plaster shall be protected with a coat of clear, alkali-resistant lacquer meeting AAMA Specification 602.2 or a heavy coat of alkali-resistant bituminous paint conforming to Specification MIL-C-18480. Where aluminum is contacted by absorptive materials subject to repeated wetting or treated with a preservative non-compatible with aluminum, apply two coats of aluminum paint to such materials and seal joints with an approved calking compound.

12. INSTALLATION:

12.1 The installation and erection of the skylight system and all component parts shall be by the manufacturer or his authorized representative and shall be performed by skilled workmen especially trained and experienced in this type of work. The members and component parts shall be erected plumb and true in proper alignment and in correct relationship to the work of other trades and the established lines and grades indicated. The installation of components such as acrylic panels, sealants, and accessories shall be as specified herein with each applicable component.

12.2 Tolerances: Permissible tolerance in the building frame and other work adjacent to the skylight shall be as indicated on the project drawings or stated in other sections of the project specification. The skylight shall be designed and erected to accommodate those tolerances. All parts of the skylight, when completed, shall be within the following tolerances:

a. Maximum variation from plane or location shown on approved shop drawings: 1/8-inch per 12 feet of length or 1/2-inch in any total length.

b. Maximum offset from true alignment between two identical members abutting end to end in line: 1/16-inch.

12.3 Anchorage: Anchorage of the skylight to the structure shall be in accordance with the project drawings and the approved shop drawings. After the skylight is properly positioned, all adjustable anchorage connections shall be secured by welding or bolting as indicated and specified. Where components are to be installed within or between prepared masonry openings, the required built-in anchoring devices shall be set and the components installed within the prepared openings.

12.4 Installation of Acrylic Panels: Except as otherwise indicated on the approved shop drawings, or specified, the installation acrylic panels shall be in accordance with the applicable procedure recommended by the manufacturer for the type of glazing shown and specified.

13. CLEANING AND PROTECTION:

13.1 Cleaning and Replacing Acrylic Panels: Upon completion of skylight installation, surfaces of acrylic panels shall be thoroughly washed, cleaned on both sides, and all labels, paint spots, putty, compounds and other defacements shall be removed. Cracked, broken and imperfect panels shall be replaced at no additional cost to the Government.

13.2 Protection and Cleaning Metal Surfaces: After installation, surfaces shall be protected from disfiguration, contamination, contact with other harmful materials and from other construction hazards that will interfere with their operation, or damage their appearance or finish. The methods used for protection shall be in accordance with recommendations of the manufacturers of the products or of the respective trade association. Where paper or tape is factory applied on metal surfaces for protection during shipping or handling, it shall be removed immediately after installation at project site. All metal surfaces in connection with the skylights shall be cleaned of all mortar, plaster, paint, smears of sealants, and other foreign matter to present a neat appearance. In addition, surfaces shall be washed off with a stiff brush, soap and water and thoroughly rinsed. Where surfaces become stained or discolored, they shall be cleaned or have finish restored in accordance with the recommendations of the manufacturer of the products involved or the respective trade association.

14. FIELD CHECK TESTS FOR WATER LEAKAGE: Field check tests for water leakage shall be conducted on all skylights after erection. The tests and any necessary remedial action shall be conducted similar to tests for curtain walls as described by NAAMM Standard FC-1. Tests shall be done in the presence of the Contracting Officer. Testing for water leakage and any remedial action shall be done at no additional cost to the Government.

---END---

SECTION 07831. ROOF ACCESS HATCH

1. APPLICABLE PUBLICATIONS: The following publication of the issue listed below, but referred to thereafter by basic designation only, forms a part of this specification to the extent indicated by references thereto:

1.1 Federal Specification:

QQ-A-250/2D Aluminum 3003, Plate and Sheet.

2. QUALITY CONTROL: Approvals, except those required for field installations, field applications, and field tests, shall be obtained before custom fabrication is started and before delivery of material or equipment to the project site.

3. SUBMITTALS:

3.1 Shop Drawings: Shop drawings for roof access hatches shall be submitted and approved before delivery of materials to the site. Shop drawings shall show access hatch type, size, installation details, and methods of anchoring.

3.2 Materials Tests and Test Reports: The testing requirements for materials incorporated in referenced documents will be waived provided the manufacturer submits certificates stating that previously manufactured materials have been tested by recognized laboratories, that such materials meet testing requirements specified, and that the materials furnished for this project are of the same type, quality, manufacture and make as that tested. Copies of the test reports need not be submitted except as specifically requested by the Contracting Officer.

4. DELIVERY AND STORAGE: Materials shall be handled and shipped in a manner to protect same from damage and stored in a clean, properly drained location out of contact with the ground. All damaged material shall be replaced or repaired in an approved manner by and at the expense of the Contractor.

5. ROOF ACCESS HATCH: Roof access hatch shall be fabricated of mill finish aluminum sheets. Sheet aluminum shall be alloy 3003-H14 temper conforming to QQ-A-250/2. Unless otherwise indicated, construction and accessories shall be as follows: Cover shall be fabricated from 11 gage aluminum with 3 inch beaded flange, neatly welded. Insulation for cover shall be glass fiber, 1 inch thick and shall be fully covered and protected by an 18 gage aluminum liner. Curb shall be insulated with 1-inch thick rigid fiberboard insulation. Curb shall be 12 inches high, fabricated from 11 gage aluminum, formed with 3-1/2 inch mounting flange with holes provided for securing to the roof deck. The curb shall be equipped with an integral metal cap flashing of the same gauge and metal as the curb, fully welded and ground at corners for weathertightness. Access hatch shall be completely assembled

with heavy pintle hinges, compression spring operators enclosed in telescopic tubes, positive snap latch with turn handles on inside and outside, and neoprene draft seal. Fasteners shall be provided for padlocking on the inside. All hardware shall be cadmium plated. The cover shall be equipped with an automatic hold-open arm complete with grip handle to permit one-hand release. Cover action shall be smooth through its entire range with an operating pressure of approximately 30 pounds.

6. INSTALLATION:

6.1 General: Roof access hatch shall be securely anchored to adjacent construction in accordance with manufacturer's printed instructions and approved shop drawings.

6.2 Protection of Aluminum from Dissimilar Materials: Aluminum surfaces in contact with wood or other similarly absorptive materials which may become repeatedly wet, and aluminum surfaces in contact with treated wood shall be given two coats of aluminum paint or one coat of heavy-bodied bituminous paint. In lieu of painting the aluminum, the Contractor shall have the option of painting the wood and other absorptive surfaces with two coats of aluminum paint and sealing the joints with calking compound.

6.3 Cleaning: Upon completion of installation, metal surfaces shall be thoroughly cleaned following the procedure recommended by the manufacturer. Abrasive, caustic, or acid cleaning agents shall not be used.

6.4 Protection: During installation, access hatch shall be protected from damage. Surfaces that are damaged prior to completion and acceptance shall be restored to their original condition or new replacements shall be provided at no expense to the Government.

---END---

SECTION 07951. CALKING

1. APPLICABLE PUBLICATIONS: The following publications of the issues listed below, but referred to elsewhere by basic designation only, form a part of this specification to the extent indicated by the references thereto:

1.1 Federal and Military Specifications:

TT-S-00227E & Int Am 3	Sealing Compound; Elastomeric Type, Two-component (For Calking, Sealing, and Glazing in Building Construction).
TT-S-00230C & Int Am 2	Sealing Compound; Elastomeric Type, Single Component, (For Calking, Sealing, and Glazing in Buildings and Other Structures).
TT-S-001543A	Sealing Compound; Silicone Rubber Base (For Calking, Sealing, and Glazing in Buildings and Other Structures).

1.2 Food and Drug Administration (FDA) Regulation:

21 CFR 177.2600	Rubber Articles Intended for Repeated Use in Contact With Food.

1.3 National Sanitation Foundation (NSF) Publication:

Criteria C2-72	Special Equipment and/or Devices (Food Equipment).

2. QUALITY CONTROL: Approvals, except those required for field installations, field applications, and field tests shall be obtained before custom fabrication is started and before delivery of materials or equipment to the project site.

3. SUBMITTALS:

3.1 Certificates: Submit certificates from the manufacturer attesting that the following products conform to all requirements of this specification and of reference documents:

Each type of calking compound or sealant

3.1.1 Sample Certificate: The certificate shall not contain statements that could be interpreted to imply that the product does not meet all requirements specified, such as "as good as"; "achieve the same end use and results as materials formulated in accordance with the referenced specification"; "equal or exceed the service and performance of the specified material". The certificate should simply state that the product conforms to all requirements specified.

MEMORANDUM OF CALL

TO: Roger

☒ YOU WERE CALLED BY— ☐ YOU WERE VISITED BY—

Ben Wyatt

OF (Organization)

☒ PLEASE CALL → PHONE NO. CODE/EXT. ☐ FTS

☐ WILL CALL AGAIN ☐ IS WAITING TO SEE YOU

☐ RETURNED YOUR CALL ☐ WISHES AN APPOINTMENT

MESSAGE

1. Speaker assembly
16740 - 3.5.5.1

RECEIVED BY	DATE	TIME

63-109

☆U.S. G.P.O. 1979-281-184/6

STANDARD FORM 63 (Rev. 8-76)
Prescribed by GSA
FPMR (41 CFR) 101-11.6

SAMPLE CERTIFICATE

The manufacturer hereby certifies that the following products being furnished for this project conform to all requirements of the project specifications and of the reference specifications listed:

MANUFACTURER AND PRODUCT	REFERENCE SPECIFICATION
John Doe Company	
Interior Calking or Sealant	TT-S-001543, Class B
Exterior Calking or Sealant	TT-S-001543, Class A

SIGNATURE AND TITLE

3.2 Certified Test Reports: Submit certified copies of the reports of all tests required in referenced publications or specified herein for the products listed hereinafter. The tests shall have been performed in a laboratory meeting the requirements of the Quality Control Section of Division 1. The tests shall have been performed within 3 years of the date of submittal of the copies. Test reports shall be accompanied by certificates from the manufacturer certifying that the tested products are of the same type, quality, manufacture, and make as those being furnished for this project.

(a) Each type of calking compound or sealant

(b) Primer

(c) Bond breaker

(d) Backstops

3.3 Catalog Data: Submit complete descriptive literature for each type of each of the following items. Data which describe more than one type shall be clearly marked to indicate which type the Contractor intends to provide. Data shall be sufficient to show conformance to specified requirements.

(a) Each type of calking compound or sealant

(b) Primer

(c) Bond breaker

(d) Backstops

3.4 Colors: Submit one sample of each color of each of the following items for verification that products match the colors indicated. Where colors are not indicated, submit not less than 2 different samples of manufacturer's standard colors and patterns for selection by the Contracting Officer.

(a) Each type of calking or sealant

(b) Primer

(c) Bond breaker

(d) Backstops

3.5 Sample Joint: Before calking work is started, a sample of each type of joint shall be calked where directed. The sample shall show the workmanship, bond and color of calking work throughout the project and shall match that of the approved sample joint.

4. DELIVERY AND STORAGE: Materials shall be delivered to the job site in the manufacturer's original unopened containers, with the brands, date of manufacture and name clearly marked thereon. All materials shall be carefully handled and stored to prevent inclusion of foreign materials, or subjection to sustained temperatures exceeding 90 degrees Fahrenheit. Calking compound shall be compatible with the material to and against which it is applied, and shall be of the nonstaining type. Sealants or calking compound more than six months old shall not be used.

5. GENERAL REQUIREMENTS:

5.1 Interior Calking or Sealant: Interior calking or sealant shall be provided at all open joints exposed on the interior of the building, including but not limited to all joints subjected to vermin intrusion and unsanitary conditions, perimeter of all equipment, and at all interior joints indicated to receive sealant or calking.

5.2 Exterior Calking or Sealant: Exterior calking or sealant shall be provided at all open joints and cracks exposed on the exterior of the building, in all areas requiring sealing to produce water- and weather-tight construction and at all exterior joints indicated to receive sealant or calking.

5.3 Floor Joint Sealant: Floor joint sealant shall be provided in all control joints in ceramic tile floors, brick at sloping brick sills, brick pavers and in other floors unless otherwise indicated.

6. MATERIALS: Products shall conform to the reference documents listed and shall be of the type and class listed for each use.

6.1 Interior Calking or Sealant: TT-S-001543, Class A, one part silicone rubber sealant. Interior calking or sealant compound shall meet the United States Food and Drug Administration requirements of FDA Regulation "21 CFR 177.2600" and National Sanitation Foundation's Publication "Criteria C2".

6.2 Exterior Calking or Sealant: TT-S-001543, Class A, one part low modulus silicone rubber sealant.

6.3 Floor Joint Sealants: TT-S-227, Type I, Class B, or TT-S-230, Type II, Class B, with a Durometer Hardness of not less than 35 nor more than 50 after 14 days cure.

6.4 Primer: Primer shall be a quick-drying, colorless, nonstaining sealer, of type and consistency recommended by the calking or sealant manufacturer for the particular application.

6.5 Bond Breakers: Bond breakers shall be of the type and consistency recommended by the calking or sealant manufacturer for the particular application.

6.6 Backstops: Glass fiber roving, or neoprene, butyl, polyurethane, vinyl or polyethylene foams free from oil or other staining elements, shall be used as backstops. Oakum and other types of absorptive materials shall not be used as backstops.

7. INSTALLATION:

7.1 Surface Preparation: Surfaces against which primer and calking are to be applied shall be clean, dry to the touch, free from frost, moisture, grease, oil, wax, lacquer, paint or other foreign matter that would tend to destroy or impair adhesion. All joints shall be enclosed on three sides. Where grooves for adequate calking have not been provided, suitable grooves shall be cleaned out to the depth of 1/2-inch and ground to a minimum width of 1/4-inch without damage to the adjoining work. No grinding shall be required on metal surfaces. Where necessary to provide a suitable backstop, the back of joints over 1/2-inch in depth shall be packed tightly with an approved backstop material to within the depth of 1/2-inch from the surface. All loose particles shall be cleaned out just prior to calking and grooves given a uniform coating of primer. Primer shall not be applied to exposed finish surfaces. Bond breakers shall be provided as recommended by the sealant manufacturer for each type of joint and type of sealant used.

7.2 Application: The calking compound shall be applied in accordance with the manufacturer's printed instructions, using a gun with nozzle of proper size to fit the joint width. The compound shall be forced into grooves with sufficient pressure to fill the grooves solidly. Calking shall be uniformly smooth and free of wrinkles, and unless indicated otherwise, shall be tooled as necessary and left sufficiently convex to result in a flush joint when dry. Where the use of gun is impracticable, suitable hand tools may be used. The calking compound shall not be applied to joints when the air temperature is below 50 degrees Fahrenheit, or when it appears probable that temperatures below 50 degrees Fahrenheit will be encountered before the calking has set. The calking compound shall not be used when it becomes too gelled to be discharged in a continuous flow from the gun. Modification of the calking compound by addition of liquids, solvents, or powders shall not be

permitted. Only the amount of calking which can be installed within four hours shall be mixed, but at no time shall this amount exceed 5-gallon-unit increments. Calking around openings shall include the entire perimeter of each opening.

7.3 Protection and Cleaning: Areas adjacent to joints to be filled shall be protected from smearing by the compound. Paper masking tape may be used for this purpose if removed 5 to 10 minutes after the joint section is filled. Fresh compound that has accidentally been smeared on masonry shall be scraped off immediately and rubbed clean with methyl ethyl ketone, toluene or a similar solvent. Upon completion of calking all remaining smears, stains, and other soiling resulting therefrom shall be removed and work left in a clean and neat condition.

---END---

SECTION 08110. HOLLOW METAL DOORS AND FRAMES

1. APPLICABLE PUBLICATIONS: The following publications of the issues listed below but referred to thereafter by basic designation only, form a part of this specification to the extent indicated by references thereto:

1.1 Federal Specifications:

HH-I-524B & Int Am 1	Insulation Board Thermal (Polystyrene).
HH-I-530A & Int Am 3	Insulation Board, Thermal (Polyurethane and Polyisocyanurate).
RR-D-575B	Door, Metal, Sliding and Swing: Door Frame, Metal (Flush and Semi-flush).

1.2 American Society for Testing and Materials (ASTM) Publications:

D1621-73	Compressive Strength of Rigid Cellular Plastics, Test for.
D1622-63(1975)	Apparent Density of Rigid Cellular Plastics, Test for.
D1623-72	Tensile Properties of Rigid Cellular Plastics, Test for.
D2126-75	Resistance of Rigid Cellular Plastics to Simulated Service Conditions; Test for.
E152-76	Fire Test for Door Assemblies.

1.3 American National Standards Institute, Inc. (ANSI) Publications:

A115-1971	Specifications for Door and Frame Preparation.

1.4 National Fire Protection Association (NFPA) Publications:

Standard No. 80	Fire Doors and Windows, 1975.
Code No. 101	Life Safety Code, 1976.

1.5 The Steel Door Institute (SDI) Publications:

SDI 100	Recommended Specifications - Standard Steel Doors and Frames.
SDI 107	Hardware on Steel Doors (Reinforcement-application).

2. QUALITY CONTROL: Approvals, except those required for field installations, field applications and field tests, shall be obtained before custom fabrication is started and before delivery of materials or equipment to the project site.

3. SUBMITTALS:

3.1 Tests and Certificates: The testing requirements for materials incorporated in referenced documents will be waived provided the Contractor submits certificates from the manufacturer stating that materials furnished

for this project conform to all requirements of this specification and the referenced documents. Material certificates shall be submitted to and approved by the Contracting Officer. Copies of other test reports need not be submitted except as specifically requested by the Contracting Officer.

3.1.1 Sample Certificate: The certificate shall not contain statements that could be interpreted to imply that the product does not meet all requirements specified, such as "as good as"; "achieve the same end use and results as materials formulated in accordance with the referenced specification"; "equal or exceed the service and performance of the specified material". The certificate should simply state that the product conforms to all requirements specified.

SAMPLE CERTIFICATE

The manufacturer hereby certifies that the following products being furnished for this project conform to all requirements of the project specifications and the respective reference specifications:

MANUFACTURER AND PRODUCT	REFERENCE SPECIFICATION
John Doe Company Hollow Metal Doors, Extra Heavy Duty	RR-D-575B, Type III

SIGNATURE AND TITLE

3.2 Catalog Data: Complete descriptive literature for each type of door and frame shall be submitted to and approved by the Contracting Officer before work is started. Data which describe more than one type, size, model, or item shall be clearly marked to indicate which type, size, model, or item the Contractor intends to provide. Data shall be sufficient to show conformance to specified requirements.

3.3 Shop Drawings: Complete shop drawings for the doors and frames shall be submitted to and approved by the Contracting Officer before work is started. Drawings shall indicate types, sizes, locations, metal gages, hardware provisions, method of glazing, installation details and other details of construction.

4. DELIVERY AND STORAGE:

4.1 Delivery: Doors, frames and accessories delivered to the site shall be inspected for damage, unloaded and stored in suitable and accessible spaces with a minimum of handling. During delivery, door frames of welded unit construction shall be strapped together in pairs with the head of one frame inverted for bracing. As an alternate method temporary steel spreaders shall be securely fastened to the bottom of each frame.

4.2 Storage: At the site, doors and frames shall be stored carefully on platforms under cover. The storage spaces shall be in dry locations with adequate ventilation, free from dust, or water, and shall permit easy access for inspection and handling. The use of non-vented plastic or canvas shelters which create a humidity chamber shall be avoided. If the fiberboard wrapper on the door becomes wet, the carton shall be removed immediately. To promote air circulation, a 1/4 inch space shall be provided between the doors.

5. MATERIALS AND CONSTRUCTION: Hollow metal doors and frames of sizes, types, and designs indicated and specified herein shall be provided at openings shown on the drawings. Doors and frames shall conform to the requirements of RR-D-575, unless specified otherwise herein. Modify title of paragraph 3.2.9 in RR-D-575 to read "Type III, extra heavy duty, 1-3/4 inch". Doors and frames shall be prepared to receive the hardware specified under the Section entitled "Finish Hardware".

5.1 Hollow Metal Doors: Style of doors shall be 4, unless specified otherwise. Where indicated, bottom of door shall be undercut. Doors shall be 1-3/4 inch thick. All doors shall be filled with insulation or plastic foam core panel reinforcement.

5.1.1 Type III (Extra Heavy Duty) Doors: Type III steel doors shall be provided and shall be manufacturer's extra heavy duty type, of sizes and design indicated. Doors for exterior mounting shall have top edge closed flush.

5.1.2 Louvers, Astragals, and Moldings:

5.1.2.1 Louvers: Louvers indicated for interior metal doors or in adjoining metal frames shall be stationary sightproof type of manufacturer's stock design and having the free area indicated. Louvers for lightproof doors shall be of design that will not transmit light. Louvers for exterior doors shall have blades arranged to prevent the transmission of water. Louver blades shall be welded to or tenoned to frame and the entire louver assembly fastened to the door with moldings. Moldings located on the room or nonsecurity side of the doors shall be detachable. Moldings located on the security side of the doors shall be an integral part of the louver. Louvers shall be formed of 18 gage steel for interior doors and panels, and 16 gage steel for exterior doors and panels. In addition, louvers for exterior doors, where so indicated, shall have steel-framed insect screens, as designated, secured to louvers in a rigid manner to permit ready removal. Wire cloth for screens shall be 8 x 14 mesh, 32 gage aluminum. All louvers, before screening, except louvers for lightproof doors shall be designated to transmit a minimum of 35 percent free air. Louvers for light-proof doors shall be designed to transmit a minimum of 20 percent free air.

5.1.2.2 Astragals: Pairs of exterior metal doors shall have an overlapped metal astragal, except when the doors are equipped with rim type exit hardware and provided with a removable mullion.

5.1.2.3 Moldings: Moldings around glazed or louvered panels shall be of such design as to provide a rigid and secure installation. Panel moldings on the outside of exterior doors and on the corridor side of interior doors shall be non-removable. Other moldings around metal panels may be stationary or removable. Moldings on the inside of glass and louver panels shall be secured to the stationary moldings and muntins with oval-head countersunk sheet metal or machine screws having small head. At the Contractor's option, snap-on moldings may be used on the inside of glazed panels. Muntins shall interlock at intersections and shall be fitted by coping or mitering and welded to stationary panel moldings.

5.1.3 Plastic Foam Panel Reinforcing: Plastic foam core panel reinforcement shall be by one of the following methods:

a. A continuous rigid polyurethane plastic foam core, foamed-in-place or in board form bonded to the steel face sheets, and free of voids or other defects affecting its serviceability. The foam shall have the following properties when tested in accordance with the listed ASTM and visual test methods:

Property	Requirement	Test Method
Flammability	Grade 2	Fed. Spec. HH-I-530, Flammability Test
Density, core	1.8 lb/cu. ft., min.	D1622
Compressive strength	20 psi, min.; at 10% deformation or at yield point, whichever occurs first.	D1621, Procedure A
Tensile strength	20 psi, min., and not greater than foam to steel face sheet bond strength	D1623, Type B Specimen (Board form polyurethane shall be bonded with adhesive used for bonding in door.)
Dimensional stability	plus or minus 5% volume change, max., and no visible distortion after 7 days exposure at -15 degrees F and 200 degrees F.	D2126, dimensions and visual examination measurements only
Holes and voids	No single hole or void larger than 1/4 inch in any direction, and no more than 8 holes up to 1/4 inch in size in any direction per 4 square feet of surface area.	Visual Examination

b. A rigid, molded polystyrene plastic foam bead board core bonded to the steel face sheets with a thermosetting adhesive. The foam core shall have the following properties when tested in accordance with the listed ASTM, visual, or other indicated test methods.

Property	Requirement	Test Method
Flammability	AEB 60mm.max/ATB 50 sec. max*	Fed. Spec. HH-I-524, Flammability Test
Density	1.0 lb. cu. ft., min.	D1622
Compressive strength	10 psi, min., at 10% deformation or at yield point, whichever comes first.	D1621, Procedure A
Tensile strength	18 psi, min., and not greater than foam to steel face sheet bond strength	D1623, Type B Specimen (Polystyrene foam shall be bonded adhesive used for bonding in door.)
Dimensional stability	Plus or minus 5% volume change, max., and no visible distortion after 7 days exposure at -15 degrees F and 165 degrees F.	D2126, dimensions and visual examination measurements only.
Holes and voids	No single hole or void larger than 1/4 inch in any direction, and no more than 8 holes up to 1/4 inch in size in any direction per 8 square feet of surface area.	Visual examination
Bead fusion	Essentially fused bead structure indicated by an excess of broken or sheared beads.	Federal Specification HH-I-524, bead fusion test.

*AEB = Average Extent of Burning; ATB = Average Time of Burning.

5.2 Hollow Metal Frames: Frames shall be formed to sizes and shapes indicated, and shall have full welded unit type construction at corners and other joints. Steel frames for doors, transoms, adjoining side-lights,

mullions and interior glazed panels shall be provided at locations shown on drawings.

5.2.1 Joints of Welded-Type Frames: Corner joints of frames for doors shall be mitered and welded in accordance with the referenced requirements. All contact edges shall be closed tight. Welds on exposed surfaces shall be dressed flush and smooth and shall present a neat appearance.

5.2.2 Mullions and Transom Bars: Mullions and transom bars shall be closed or tubular construction, and shall member with heads and jambs and be butt-welded thereto. Bottom of door mullions shall have adjustable floor anchors and spreader connections.

5.2.3 Stops and Beads: Stops and beads shall be formed from 20 gage steel. They shall be furnished with frames at interior glazed openings and other locations where louvers, panels or fixed glass is indicated in pressed steel frames. Neoprene or felt gaskets shall be provided where indicated. Beads shall be secured to frames with oval head, countersunk cross-recessed-head self-tapping sheet metal screws or concealed type clips and fasteners. Either type shall be spaced approximately 12 to 16 inches on centers. Beads having a molded shape shall be mitered at corners. Square or rectangular beads may be either mitered or butted at corners.

5.2.4 Terminated Stops: Provide terminated stops at all door frames, except exterior doors, labeled fire doors, lead line doors equipped with light proof gaskets. Frames shall have stops terminated 6 inches above floor.

5.2.5 Gaskets for Lightproof Frames: Frames to receive lightproof doors shall be tapped to receive gaskets and an adjustable metal cover strip. Gaskets shall be synthetic rubber or treated felt, not less than 1/8 inch thick; cover strips shall be 18 gage steel, mitered or coped at corners and slotted for adjustment. Cover strips shall be installed to permit removal and replacement of the gaskets without damaging the door or frame.

5.2.6 Cased Openings: Frames for cased openings shall be fabricated of same material, gage and assembly as specified for metal door frames, except omit door stops and omit preparation for hardware.

5.2.7 Anchors and Fasteners for Frames: Anchors shall be the manufacturer's standard shapes and sizes designed to anchor the frame securely to the adjoining construction, except anchors at stud walls shall be of type indicated. Anchors shall be of steel, zinc coated or painted with rust-inhibitive paint. Floor anchors shall be not lighter than 16 gage except at stud walls, anchors shall be of gage indicated. Other anchors shall be not lighter than 18 gage.

5.2.7.1 Wall Anchors: A minimum of three anchors shall be provided for each jamb. Anchors shall be located opposite the top and bottom hinges and midway between top and bottom anchors.

a. Anchors for fastening frames to masonry shall be adjustable, shall be corrugated or perforated, and shall extend not less than 8 inches into masonry.

b. Anchors for fastening frames to metal stud partitions shall be welded to the back of frames. Anchors shall be designed to be fastened to closed steel studs with sheet metal screws, and to open steel studs by wiring or welding.

5.2.7.2 Floor Anchors: Floor anchors shall be provided at the bottom of each jamb member. Anchors at masonry walls shall be adjustable and drilled for 3/8 inch diameter anchor bolts. Anchors at stud walls shall be welded to bottom of frame as indicated.

5.2.7.3 Fasteners: Fasteners for trim applied to rough bucks shall be of concealed type.

5.3 Lead Lined Door Frames: In addition to the requirements specified in paragraph "Hollow Metal Frames", the inside of frames for lead lined doors shall be lined with a single thickness of sheet lead of not less than the thickness of the lead in the barrier in which the frames are used. The lead lining shall be continuous in each jamb and across the head, shall be worked well into the contour of frames, and shall be wide enough to provide an effective lead lap with the lead in the adjoining barrier.

5.4 Fire Doors and Frames:

5.4.1 Labels: Labeled fire doors, their frames and hardware shall be types that have been fire tested and rated in accordance with ASTM E152. Labels of the Underwriters' Laboratories, Inc., or Factory Mutual Laboratories shall be provided as evidence of rating. Labels shall indicate the applicable fire testing rating of the door construction provided. The construction details necessary for labeled doors shall take precedence over details indicated or specified.

5.4.2 Oversized Doors: Where fire doors and frames exceed the size for which testing and labeling service is offered, certificates of inspection from the testing laboratory shall be furnished. The certificate shall state that the doors, frames, and hardware to be provided are identical in design, materials, and construction to a door that has been tested and rated.

5.4.3 Steel Astragal on Fire Doors: Astragal on pairs of labeled fire doors shall conform to NFPA, and Underwriters' Laboratories requirements.

5.4.4 Terminated Stops for Fire Doors: Stops for labeled fire doors shall not be terminated except as approved by the Underwriters' Laboratories, Inc.

5.5 Provision for Installation and Locations of Hardware: Doors and frames shall be reinforced, drilled, and tapped to receive mortised finish

hardware. Door and frame preparation for hardware shall be in accordance with the applicable requirements of ANSI A115 and SDI 107. Drilling and tapping for surface applied hardware shall be done at the project site and shall conform to SDI 107. Additional reinforcing of doors for surface applied hardware shall be built into the door at the factory. Hardware shall be located in accordance with the requirements of SDI 100, as applicable. Door frames with the exception of labeled fire door frames and frames that will have lightproof gasketing, shall be punched to receive a minimum of two rubber or vinyl door silencers on lock side of single doors, and one silencer for each leaf in heads of double door frames. Lock strikes shall be set out to provide clearance for silencers.

5.6 Factory Applied Undercoat on Steel:

5.6.1 Primed Finish for Metal Surfaces: All metal doors and frames shall be factory primed as specified in RR-D-575.

5.7 Construction and Workmanship: Finished doors and frames shall be strong and rigid, neat in appearance, free from defects, waves, scratches, cuts, dents, ridges, holes, warp or buckle. Molded members shall be clean cut, straight, and true, with joints coped or mitered, well formed, and in true alignment. Exposed welded and soldered joints shall be dressed smooth. Door frame sections shall be designed for use with the wall construction indicated. Fastenings shall be concealed where practicable. Wraparound type frames for masonry partitions shall be provided with a throat opening 1/8 inch larger than the actual masonry thickness. Other frames in exposed masonry walls or partitions shall be designed to allow sufficient space between the inside back of trim and masonry to receive calking compound.

6. INSTALLATION:

6.1 Steel Frames: Frames shall be set accurately in position, plumbed, aligned, and braced securely until permanent anchors are set. The bottom of frames shall be anchored securely to floors with expansion bolts or with power fasteners. Wall anchors shall be built-in or secured to adjoining construction as indicated. Where frames require ceiling struts or other structural overhead bracing, they shall be anchored securely to ceiling or structural framing above. Frames in masonry construction shall be backfilled with mortar. When an additive is provided in the mortar, the inside of the frame shall be coated in the field with a corrosion inhibiting bituminous material.

6.2 Hinged Doors: Doors shall be hung in accordance with the clearances specified in RR-D-575. After erection and glazing, hardware shall be cleaned and adjusted.

6.3 Fire Doors and Frames: Installation of fire doors and frames, including hardware and operational characteristics shall be in accordance with NFPA Standard No. 80 and Code 101.

7. PROTECTION: Doors and frames shall be protected from damage. Doors or frames that are damaged prior to completion and acceptance of the project, shall be repaired in a satisfactory manner, or replaced, as directed. Frames that have rusted shall be wire brushed until all rust is removed, cleaned thoroughly, and given an all-over coat of rust-inhibiting paint of the same type used for shop coat.

8. CLEANING: Upon completion, exposed surfaces of doors and frames shall be cleaned thoroughly. All mastic smears and other unsightly marks shall be removed.

---END---

SECTION 08112. SOUND RETARDANT DOORS AND FRAMES

1. APPLICABLE PUBLICATIONS: The following publications of the issues listed below, but referred to thereafter by basic designation only, form a part of this specification to the extent indicated by the references thereto:

1.1 Federal Specifications:

RR-D-575B	Door, Metal, Sliding and Swing: Door Frame, Metal (Flush and Semi-flush).

1.2 American Society for Testing and Materials (ASTM) Publications:

E90-75	Airborne-Sound Transmission Loss of Building Partitions.

1.3 American National Standards Institute, Inc. (ANSI) Publications:

A115-1971	Specifications for Door and Frame Preparation.

1.4 The Steel Door Institute (SDI) Publications:

SDI 100	Recommended Specifications - Standard Steel Doors and Frames.
SDI 107	Hardware on Steel Doors (Reinforcement-application).

2. QUALITY CONTROL: Approvals, except those required for field installations, field applications and field tests, shall be obtained before custom fabrication is started and before delivery of materials or equipment to the project site.

3. SUBMITTALS:

3.1 Tests and Certificates: The testing requirements for materials incorporated in referenced documents will be waived provided the Contractor submits certificates from the manufacturer stating that materials furnished for this project conform to all requirements of this specification and the referenced documents. Copies of test reports from an independent acoustical testing laboratory of a fully operable door assembly shall be submitted to and approved by the Contracting Officer before work is started.

3.1.1 Sample Certificate: The certificate shall not contain statements that could be interpreted to imply that the product does not meet all requirements specified, such as "as good as"; "achieve the same end use and results as materials formulated in accordance with the referenced specification"; "equal or exceed the service and performance of the specified material". The certificate should simply state that the product conforms to all requirements specified.

SAMPLE CERTIFICATE

The manufacturer hereby certifies that the following products being furnished for this project conform to all requirements of the project specifications and the respective reference specifications:

MANUFACTURER AND PRODUCT	REFERENCE SPECIFICATION
John Doe Company Sound Retardant Doors and Frames	ASTM E90

SIGNATURE AND TITLE

3.2 Catalog Data: Complete descriptive literature for each type of door and frame shall be submitted to and approved by the Contracting Officer before work is started. Data which describe more than one type, size, model, or item shall be clearly marked to indicate which type, size, model, or item the Contractor intends to provide. Data shall be sufficient to show conformance to specified requirements.

3.3 Shop Drawings: Complete shop drawings for the doors and frames shall be submitted to and approved by the Contracting Officer before work is started. Drawings shall indicate types, sizes, locations, metal gages, hardware provisions, method of glazing, installation details and other details of construction.

4. DELIVERY AND STORAGE:

4.1 Delivery: Doors, frames and accessories delivered to the site shall be inspected for damage, unloaded and stored in suitable and accessible spaces with a minimum of handling. During delivery, door frames of welded unit construction shall be strapped together in pairs with the head of one frame inverted for bracing. As an alternate method temporary steel spreaders shall be securely fastened to the bottom of each frame.

4.2 Storage: At the site, doors and frames shall be stored carefully on platforms under cover. The storage spaces shall be in dry locations with adequate ventilation, free from dust, or water, and shall permit easy access for inspection and handling. The use of non-vented plastic or canvas shelters which create a humidity chamber shall be avoided. If the fiberboard wrapper on the door becomes wet, the carton shall be removed immediately. To promote air circulation, a 1/4 inch space shall be provided between the doors.

5. MATERIALS AND CONSTRUCTION: Hollow metal sound retardant doors and frames of sizes, types, and designs indicated and specified herein shall be provided at openings shown on the drawings. Doors and frames shall conform to the requirements of RR-D-575, unless specified otherwise herein. Modify title of paragraph 3.2.9 in RR-D-575 to read "Type III, extra heavy duty, 1-3/4

inch". Doors and frames shall be prepared to receive the hardware specified under the section entitled "Finish Hardware".

5.1 Sound Retardant Doors and Frames: Sound retardant door and frame units shall have the following STC rating when tested in accordance with ASTM E90. Single doors shall have an STC rating of 50 and double doors (pairs of doors) shall have an STC rating of 46.

5.1.1 Doors: Fabricate doors to provide STC rating specified. Continuously weld and dress flush all seams on exposed surfaces. Allow proper clearances for hanging and operation of doors without binding. Completely fill inside of doors with manufacturer's standard insulating material to prevent inside rusting and to provide the required sound deadening. Bevel lock edge of stile 1/8 inch in 2 inches. Mortise, reinforce, drill and tap doors to templates provided by the hardware manufacturer. Provide metal reinforcing plates for locks and all mortise hardware.

5.1.2 Frames: Fabricate frames to provide STC rating specified. Frames shall be combination type with integral trim fabricated from 12 gage steel for pairs of doors and 14 gage steel for single doors. Miter and continuously weld all joints. Dress flush all welds on exposed surfaces. Spot weld floor anchors and drill for anchoring. Weld steel angle spreaders to bottom to insure parallel alignment of jambs. Mortise, reinforce, drill and tap frames to templates to receive hardware. Spot weld steel reinforcement for hardware cutouts and provide mortar guards in back of all hardware cutouts. Provide solid bar hinge reinforcement at pairs of doors.

5.2 Anchors: Provide metal floor and wall anchors required for adjacent type of construction of type recommended by manufacturer. Construct anchors from steel not lighter than gage used for frames.

5.3 Accessories: Door manufacturer shall provide the following accessories.

5.3.1 Automatic Door Bottom Seal: Provide semi-recessed automatic door bottom seal of type recommended by door manufacturer. Doors shall be factory mortised to accept automatic door bottom seal.

5.3.2 Head and Jamb Seal: Provide type recommended by door manufacturer to best serve door application.

5.3.3 Astragal: At pairs of doors provide acoustical astragal full height of doors.

5.4 Factory Applied Undercoat on Steel: All sound retardant metal doors and frames shall be factory primed as specified in RR-D-575.

6. INSTALLATION: Install doors and frames in accordance with manufacturer's recommendations to provide STC ratings specified.

6.1 Frames: Locate wall anchors near top and bottom of each frame and at intermediate points not over 24 inches apart. Erect frames plumb and brace securely until permanent anchors are set. Where floor fills occur, terminate bottom of frames at finish floor level and support frames with adjustable extension clip angles anchored to structural slab. Anchor bottom of frames to floors with power fasteners and build in wall anchors. Securely anchor overhead struts in steel stud walls to structural framing.

6.2 Doors: Install doors and make all adjustments necessary for proper operation.

7. PROTECTION: Doors and frames shall be protected from damage. Doors or frames that are damaged prior to completion and acceptance of the project, shall be repaired in a satisfactory manner, or replaced, as directed. Frames that have rusted shall be wire brushed until all rust is removed, cleaned thoroughly, and given an all-over coat of rust-inhibiting paint of the same type used for shop coat.

8. CLEANING: Upon completion, exposed surfaces of doors and frames shall be cleaned thoroughly. All mastic smears and other unsightly marks shall be removed.

---END---

SECTION 08120. ALUMINUM SWINGING DOORS AND FRAMES

1. APPLICABLE PUBLICATIONS: The following publications of the issues listed below, but referred to thereafter by basic designation only, form a part of this specification to the extent indicated by the references thereto:

1.1 Federal Specifications:

QQ-A-200/9C & Am 1	Aluminum Alloy Bar, Rod, Shapes and Tube, and Wire Extruded 6063.
QQ-A-250/2D	Aluminum Alloy, 3003, Plate and Strip.
QQ-A-250/8E	Aluminum Alloy, 5052, Plate and Strip.
QQ-A-250/11E	Aluminum Alloy, 6061, Plate and Strip.
TT-P-38D & Am 1	Paint, Aluminum, Ready-Mixed.
TT-P-645	Primer, Paint, Zinc-Chromate, Alkyd Type.

1.2 Military Specifications:

MIL-C-18480A & Am 3	Coating Compound, Bituminous Solvent, Coal Tar Base.

1.3 American National Standards Institute (ANSI):

A156.4-1972	Door Controls (Closers).
A156.8-1974	Door Controls (Overhead Holders).

1.4 American Society for Testing and Materials (ASTM):

A36-75 Structural Steel.

1.5 National Association of Architectural Metal Manufacturers (NAAMM):

Metal Finishes Manual (Finish Designation). (August 1969)

2. QUALITY CONTROL: Approvals, except those required for field installation, field application and field tests, shall be obtained before delivery of materials to the project site.

3. SUBMITTALS:

3.1 Materials Tests and Test Reports: The testing requirements for materials incorporated in referenced documents will be waived provided the manufacturer submits certificates stating that previously manufactured materials have been tested by recognized laboratories, that such materials meet testing requirements specified, and that the materials furnished for this project are of the same type, quality, manufacture and make as that tested.

Material certificates shall be submitted to and approved by the Contracting Officer. Copies of other test reports need not be submitted except as specifically requested by the Contracting Officer.

3.2 Samples: Two full size corner samples of doors and frames showing construction and with finish as specified, shall be submitted to and approved by the Contracting Officer before work is started.

3.3 Shop Drawings: Shop drawings shall be submitted to and approved by the Contracting Officer before proceeding with fabrication. Shop drawings shall indicate elevations of each door and sidelight type; size of doors and frames; metal gages; details of door and frame construction; methods of anchorage; glazing details; weatherstripping; hardware and details of installation. Include a schedule location of each door frame.

3.4 Descriptive Literature: Manufacturer's descriptive literature shall be furnished with shop drawings and shall consist of detail specifications and instructions for installation, adjustments, cleaning and maintenance.

4. DELIVERY AND STORAGE:

4.1 Protective Coating or Covering: Prior to shipment from the factory, finished surfaces of aluminum shall receive a protective coating or covering. Coating or covering shall not chip, peel, or flake due to temperature or weather and shall protect against discoloration and surface damage from transportation, storage, and construction activities. Coating or covering shall be readily removable without affecting the finish. Covering shall be either adhesive paper, waterproof tape or strippable plastic. Coating applied to aluminum shall be two sprayed-on coats or clear, water-white, nonyellowing, methacrylate lacquer to a total minimum thickness of 0.4 mil and maximum thickness of 0.6 mil.

4.2 Storage: Materials delivered to the site shall be inspected for damage, unloaded and stored with a minimum of handling. The storage spaces shall be in dry locations with adequate ventilation, free from dust, or water, and shall permit easy access for inspection and handling. Materials shall be stored on floors or platforms in a suitable and approved manner. Doors shall not be covered with tarps, polyethylene film, or similar type coverings, as trapped moisture can stain the metal.

5. MATERIALS:

5.1 Aluminum for Doors and Frames: Aluminum shall consist of extruded shapes and sheet material. Extrusions shall comply with Specification QQ-A-200/9, alloy 6063-T5. Aluminum sheets and strips shall comply with Specification QQ-A-250/2, QQ-A-250/8 or QQ-A-250/11; alloy and temper best suited for the purpose. Screws, nuts, washers, rivets, and other miscellaneous fastening devices shall be of hard aluminum or stainless steel.

5.2 Structural Steel: Steel shall conform to ASTM A36.

5.3 Aluminum Paint: TT-P-38.

5.4 Zinc Chromate Primer: TT-P-645.

5.5 Bituminous Paint: MIL-C-18480.

5.6 Hardware: Door manufacturer shall provide hardware specified herein for each door.

5.6.1 Floor Concealed Closer: ANSI A156.4, type C06061, center pivoted. Closer shall be provided with walking beam type top pivot.

5.6.2 Deadlocks: BHMA 501, type E8211, with minimum of one inch latch projection. Cylinders shall be keyed to master-key system as directed.

5.6.3 Overhead Stop: ANSI A156.8, Overhead Concealed Slide Type, Grade 1, Heavy Duty, stop only with 90 degree opening. Overhead stop and floor concealed closer, specified herein, shall be coordinated to stop at the exact same point to prevent racking of door.

5.6.4 Door Pull: Anodized aluminum of an approved design. Finish shall match that of the framing.

5.6.5 Wood Push Trim: Wood push trim shall be as detailed and provided under section entitled "Architectural Wood Work".

5.6.6 Threshold: ANSI A156.4, type C38091, extruded aluminum, 1/4 inch thick, designed for center hung pivots. Provide thresholds with ribbed top surface.

6. GENERAL REQUIREMENTS: Aluminum doors and frames at door mark, N400H and N400I shall be swing type of size and design shown. Doors shall be complete with frames, framing members, adjoining sidelights, trim, hardware and other accessories indicated and specified.

6.1 Provisions for Glazing: 1/4 inch and 3/8 inch plastic glazing is specified in Section "Glass and Glazing". Metal glazing beads, vinyl inserts and glazing gaskets for securing plastic glazing shall be supplied by the door manufacturer. Doors shall be glazed with 3/8 inch plastic glazing and sidelights shall be glazed with two 1/4 inch plastic glazing sheets with 1/2 inch air space.

6.2 Anchor: Provide anchors of sizes and shapes as indicated for securing aluminum frames to adjacent construction. Anchors shall be of stainless steel or steel with a hot-dipped galvanized finish. Anchors shall be placed near top and bottom of each jamb and at intermediate points not more than 25 inches apart, unless indicated otherwise. Anchor bottom of each frame to rough floor construction with 3/32 inch thick stainless steel angle clips

secured to back of each jamb and to floor construction; use stainless steel bolts and expansion shields for fastening clip anchors.

6.3 Weatherstripping: Provide continuous wool pile type, silicone treated weatherstripping; or a type weatherstripping recommended by the door manufacturer on stiles and top and bottom rails of exterior doors. Weatherstripping shall be attached to aluminum holders and fitted into slots which are integral with doors or frame stops. Weatherstripping shall be easily replaced without special tools. Installation shall allow doors to swing freely and close positively.

6.4 Finish on Aluminum Surfaces: Finish for aluminum doors and frames shall be AA-M10-C22-A42 black color anodized finish in accordance with the requirements of NAAMM's "Metal Finishes Manual". Finish shall match in appearance or fall within the two extremes of color range of the approved samples.

7. FABRICATION:

7.1 Welding and Fastening: Where possible, locate welds on unexposed surfaces. Welds on exposed surfaces shall be dressed smooth. Welding rods, filler wire and flux shall be carefully selected to produce a uniform texture and color in finished work. Remove flux and spatter from surfaces immediately after welding. Exposed screws or bolts will be permitted only at inconspicuous locations, and shall have heads countersunk. Concealed reinforcements for hardware shall be welded in place as specified herein.

7.2 Provisions for Hardware: Hardware templates for use in fabrication of aluminum doors and frames shall be obtained by door manufacturer from hardware supplier. Doors and frames shall be cut, reinforced, drilled and tapped at the factory to receive all template hardware. Doors to receive surface applied hardware shall be provided with reinforcing only; drilling and tapping for surface applied hardware shall be done in the field. Metal for hardware reinforcements shall be cadmium plated steel, stainless steel, or steel with a hot-dipped galvanized finish and shall be secured by welding.

7.3 Fabrication of Aluminum Frames: Aluminum frames shall be fabricated of extruded aluminum shapes. Minimum metal wall thickness for aluminum frames shall be 0.125 inch. Frames that are to receive fixed glass shall be fabricated to receive one inch glazing and have removable glass stops and glazing beads. Exposed fastenings shall be countersunk stainless steel Phillip head screws spaced not more than 18 inches on centers. Joints in frame members shall be milled to a hair line watertight fit, reinforced and either welded along concealed lines of contact or secured mechanically and by concealed welding. Shapes shown are representations of design, function and required profile. Dimensions shown are minimum. Shapes of equivalent design, dimensions, profile and function may be submitted. Such shapes shall be subject to approval of samples by the Contracting Officer.

7.4 Fabrication of Aluminum Doors: Doors shall be of type, size and design indicated and not less than 1-3/4 inches thick. Door sizes shown are nominal and shall include standard clearances as follows: 1/16 inch at hinge stiles, 1/8 inch at lock stiles and top rails and 3/16 at floors and thresholds. Single-acting doors shall be beveled 1/8 inch at lock, hinge and meeting stile edges.

7.4.1 Full Glazed Stile and Rail Doors: Doors shall have narrow stiles and rails as shown and shall be fabricated from extruded aluminum hollow seamless tubes or from a combination of open-shaped members interlocked or welded together. Top and bottom rail shall be fastened by welding, or by means of dove-tailed type clips and 3/8-inch diameter cadmium plated steel tension rods running the full length of the rails and secured with tension plates and lock nuts. An adjustable mechanism of jack screws or other suitable method shall be provided in the top rail to allow for minor clearance adjustments after installation. Extruded aluminum snap-in glazing beads shall be provided on interior side of doors. Extruded aluminum theft-proof snap-in glazing beads or fixed glazing beads shall be provided on exterior or security side of doors. Glazing beads shall have vinyl insert glazing gaskets. Glazing beads shall be designed to receive 3/8 inch plastic glazing.

8. INSTALLATION:

8.1 Frames and Framing Members: Frames and framing members to receive doors and adjoining sidelights shall be set accurately in position, plumb, square, level and in alignment. Frames shall be securely anchored to adjacent construction as shown and in accordance with manufacturer's printed instructions.

8.2 Doors shall be hung accurately with proper clearances and with hardware. After erection and glazing, hardware shall be adjusted to operate properly.

8.3 Protection of Aluminum from Dissimilar Materials:

8.3.1 Dissimilar Metals: Where aluminum surfaces come in contact with metals other than stainless steel, zinc, or white bronze, aluminum surfaces shall be insulated from direct contact with incompatible metals by one or a combination of the following methods:

(a) Painting the dissimilar metal with one coat of heavy-bodied bituminous paint.

(b) Applying a synthetic butyl rubber calking material between the aluminum and the dissimilar metal.

(c) Painting the dissimilar metal with a prime coat of zinc-chromate primer, or other suitable primer, followed by one coat of aluminum paint or other suitable protective coating, excluding those containing lead pigmentation.

(d) Use of a nonabsorptive tape or gasket in permanently dry locations.

8.3.2 Drainage from Dissimilar Metals: Dissimilar metals used in locations where drainage from them passes over aluminum shall be painted as specified in (3) above, to prevent staining of aluminum.

8.3.3 Masonry and Concrete: Aluminum surfaces in contact with mortar, concrete, or other masonry materials shall be given one coat of heavy-bodied bituminous paint.

8.3.4 Wood: Aluminum surfaces in contact with wood or other similarly absorptive materials, which may become repeatedly wet, and aluminum surfaces in contact with treated wood, shall be given two coats of the aluminum paint or one coat of heavy-bodied bituminous paint. In lieu of painting the aluminum, the Contractor shall have the option of painting the wood and other absorptive surfaces with two coats of aluminum paint, and sealing the joints with calking compound.

8.4 Cleaning: Upon completion of installation, metal surfaces of doors and frames shall be thoroughly cleaned, following the procedure recommended by the door manufacturer. Abrasive, caustic, or acid cleaning agents shall not be used.

8.5 Protection: During installation, doors and frames shall be protected from damage. Doors and frames that are damaged prior to completion and acceptance shall be restored to their original condition or new replacements shall be provided.

---END---

SECTION 08122. ALUMINUM MALL FRONT UNITS

1. APPLICABLE PUBLICATIONS: The following publications of the issues listed below, but referred to thereafter by basic designation only, form a part of this specification to the extent indicated by the references thereto:

1.1 Federal Specifications:

QQ-A-200/9C & Am 1	Aluminum Alloy Bar, Rod, Shapes and Tube, and Wire Extruded 6063.
QQ-A-250/2D	Aluminum Alloy, 3003, Plate and Strip.
QQ-A-250/8E	Aluminum Alloy, 5052, Plate and Strip.
QQ-A-250/11E	Aluminum Alloy, 6061, Plate and Strip.
TT-P-38D & Am 1	Paint, Aluminum, Ready-Mixed.
TT-P-645	Primer, Paint, Zinc-Chromate, Alkyd Type.

1.2 Military Specifications:

MIL-C-18480A(3)	Coating Compound, Bituminous Solvent, Coal Tar Base.

1.3 American National Standards Institute (ANSI):

A156.4-1972	Door Controls (Closers).
A156.8-1974	Door Controls (Overhead Holders).

1.4 American Society of Testing and Materials (ASTM):

A36-75	Structural Steel.

1.5 National Association of Architectural Metal Manufacturers (NAAMM):

Metal Finishes Manual (Finish Designation). (August 1969)

2. QUALITY CONTROL: Approvals, except those required for field installation, field application and field tests, shall be obtained before delivery of materials to the project site.

3. SUBMITTALS:

3.1 Materials Tests and Test Reports: The testing requirements for materials incorporated in referenced documents will be waived provided the manufacturer submits certificates stating that previously manufactured materials have been tested by recognized laboratories, that such materials meet testing requirements specified, and that the materials furnished for this project are of the same type, quality, manufacture and make as that tested. Material certificates shall be submitted to and approved by the Contracting Officer. Copies of other test reports need not be submitted except as specifically requested by the Contracting Officer.

3.2 Samples: Two full size corner samples of doors and frames showing construction and with finish as specified shall be submitted to and approved by the Contracting Officer before work is started.

3.3 Shop Drawings: Shop drawings for aluminum mall front units shall be submitted to and approved by the Contracting Officer before proceeding with fabrication. Shop drawings shall indicate elevations of units, size of swing doors, slide doors, fixed panels and frames; details of door, panel, and frame construction; methods of anchorage; glazing details; weatherstripping; hardware and details of installation. Include a schedule showing location of units.

3.4 Descriptive Literature: Manufacturer's descriptive literature shall be furnished with shop drawings and shall consist of detail specifications and instructions for installation, adjustments, cleaning and maintenance.

4. DELIVERY AND STORAGE:

4.1 Protective Coating or Covering: Prior to shipment from the factory, finished surfaces of aluminum and glass shall receive a protective coating or covering. Coating or covering shall not chip, peel, or flake due to temperature or weather and shall protect against discoloration and surface damage from transportation, storage, and construction activities. Coating or covering shall be readily removable without affecting the finish. Covering shall be either adhesive paper, waterproof tape or strippable plastic. Coating applied to aluminum shall be two sprayed-on coats or clear, water-white, nonyellowing, methacrylate lacquer to a total minimum thickness of 0.4 mil and maximum thickness of 0.6 mil.

4.2 Storage: Materials delivered to the site shall be inspected for damage, unloaded and stored with a minimum of handling. The storage spaces shall be in dry locations with adequate ventilation, free from dust, or water, and shall permit easy access for inspection and handling. Materials shall be stored on floors or platforms in a suitable and approved manner. Units shall not be covered with tarps, polyethylene film, or similar type coverings, as trapped moisture can stain the metal.

5. GENERAL REQUIREMENTS:

5.1 General Description: Aluminum mall front units are indicated on Door Schedule as Type SAL1 and shall be made up of one swing door, one slide panel and one fixed panel. Units shall be of size and design as indicated. Units shall be complete with frames, framing members, trim, hardware and other accessories required.

6. MATERIALS:

6.1 Aluminum for Doors, Panels and Frames: Aluminum shall consist of extruded shapes and sheet material. Extrusions shall comply with

Specification QQ-A-200/9, alloy 6063-T5. Aluminum sheets and strips shall comply with Specification QQ-A-250/2, QQ-A-250/8 or QQ-A-250/11; alloy and temper best suited for the purpose. Screws, nuts, washers, rivets, and other miscellaneous fastening devices shall be of hard aluminum or stainless steel.

6.2 Structural Steel: Steel shall conform to ASTM A36.

6.3 Aluminum Paint: TT-P-38.

6.4 Zinc Chromate Primer: TT-P-645.

6.5 Bituminous Paint: MIL-C-18480.

6.6 Sliding Panel Hardware: All required hardware for sliding panels shall be of an approved type and provided by the unit manufacturer.

6.7 Swing Door Hardware: Unit manufacturer shall provide swing door hardware specified herein for each door.

6.7.1 Floor Concealed Closer: ANSI A156.4, type C06021, center pivoted. Closer shall be provided with walking beam type top pivot.

6.7.2 Overhead Holder: ANSI A156.8, type C04531. Overhead holder and floor concealed closer, specified herein, shall be coordinated to stop at the exact same point to prevent racking of door.

6.7.3 Door Pull: Anodized aluminum of an approved design with finish to match that of the framing.

6.7.4 Wood Trim: Wood trim shall be as detailed and provided under section entitled "Architectural Wood Work".

6.8 Provisions for Glazing: Glazing is specified in section entitled "Glass and Glazing". Metal glazing beads, vinyl inserts and glazing gaskets for securing glass shall be supplied by the unit manufacturer.

6.9 Anchor: Provide anchors of sizes and shapes as indicated for securing aluminum frames to adjacent construction. Anchors shall be of stainless steel or steel with a hot-dipped galvanized finish. Anchors shall be placed near top and bottom of each jamb and at intermediate points not more than 25 inches apart, unless indicated otherwise. Anchor bottom of each frame to rough floor construction with 3/32 inch thick stainless steel angle clips secured to back of each jamb and to floor construction; use stainless steel bolts and expansion shields for fastening clip anchors.

6.10 Weatherstripping: Provide continuous wool pile type, silicon treated weatherstripping, or a type weatherstripping recommended by the unit manufacturer.

6.11 Finish on Aluminum Surfaces: Finish for aluminum doors, panels and frames shall be AA-M10-C22-A42 Black color anodized finish in accordance with the requirements of NAAMM's "Metal Finishes Manual". Finish shall match in appearance or fall within the two extremes of color range of the approved samples.

7. FABRICATION:

7.1 Welding and Fastening: Where possible, locate welds on unexposed surfaces. Welds on exposed surfaces shall be dressed smooth. Welding rods, filler wire and flux shall be carefully selected to produce a uniform texture and color in finished work. Remove flux and spatter from surfaces immediately after welding. Exposed screws or bolts will be permitted only at inconspicuous locations, and shall have heads countersunk. Concealed reinforcements for hardware shall be welded in place as specified herein.

7.2 Provisions for Hardware: Hardware templates for use in fabrication of aluminum doors and frames shall be obtained by door manufacturer from hardware manufacturer. Doors and frames shall be cut, reinforced, drilled and tapped at the factory to receive all template hardware. Doors to receive surface applied hardware shall be provided with reinforcing only; drilling and tapping for surface applied hardware shall be done in the field. Metal for hardware reinforcements shall be cadmium plated steel, stainless steel, or steel with a hot-dipped galvanized finish and shall be secured by welding.

7.3 Fabrication of Aluminum Frames: Aluminum frames shall be fabricated of extruded aluminum shapes. Minimum metal wall thickness for aluminum frames shall be 0.125 inch. Frames that are to receive fixed glass shall have removable glass stops and glazing beads. Exposed fastenings shall be countersunk stainless steel Phillip head screws spaced not more than 18 inches on centers. Joints in frame members shall be milled to a hair line watertight fit, reinforced and either welded along concealed lines of contact or secured mechanically and by concealed welding. Shapes shown are representations of design, function and required profile. Dimensions shown are minimum. Shapes of equivalent design, dimensions, profile and function may be submitted. Such shapes shall be subject to approval of samples by the Contracting Officer.

7.4 Fabrication of Aluminum Doors and Panels: Doors and panels shall be of type, size and design indicated and not less than 1-3/4 inches thick. Door sizes shown are nominal and shall include standard clearances as follows: 1/16 inch at hinge stiles, 1/8 inch at lock stiles and top rails and 3/16 at floors. Single-acting doors shall be beveled 1/8 inch at lock and hinge stile edges.

7.4.1 Full Glazed Stile and Rail Doors and Panels: Doors and panels shall have narrow stiles and rails as shown and shall be fabricated from extruded aluminum hollow seamless tubes or from a combination of open-shaped members interlocked or welded together. Top and bottom rail shall be fastened by welding, or by means of dove-tailed type clips and 3/8-inch diameter

cadmium plated steel tension rods running the full length of the rails and secured with tension plates and lock nuts. An adjustable mechanism of jack screws or other suitable method shall be provided in the top rail to allow for minor clearance adjustments after installation. Extruded aluminum snap-in glazing beads shall be provided on interior side of doors. Extruded aluminum theft-proof snap-in glazing beads or fixed glazing beads shall be provided on exterior or security side of doors. Glazing beads shall have vinyl insert glazing gaskets. Glazing beads shall be designed to receive 1/4 inch glass of type indicated.

8. INSTALLATION:

8.1 Frames and Framing Members: Frames and framing members to receive doors, sliding panels and fixed panels shall be set accurately in position, plumb, square, level and in alignment. Frames shall be securely anchored to adjacent construction as shown and in accordance with manufacturer's printed instructions.

8.2 Doors and Panels: Doors and panels shall be hung accurately with proper clearances and with hardware. After erection and glazing, hardware shall be adjusted to operate properly.

8.3 Protection of Aluminum from Dissimilar Materials:

8.3.1 Dissimilar Metals: Where aluminum surfaces come in contact with metals other than stainless steel, zinc, or white bronze, aluminum surfaces shall be insulated from direct contact with incompatible metals by one or a combination of the following methods:

(a) Painting the dissimilar metal with one coat of heavy-bodied bituminous paint.

(b) Applying a synthetic butyl rubber calking material between the aluminum and the dissimilar metal.

(c) Painting the dissimilar metal with a prime coat of zinc-chromate primer, or other suitable primer, followed by one coat of aluminum paint or other suitable protective coating, excluding those containing lead pigmentation.

(d) Use of a nonabsorptive tape or gasket in permanently dry locations.

8.3.2 Masonry and Concrete: Aluminum surfaces in contact with mortar, concrete, or other masonry materials shall be given one coat of heavy-bodied bituminous paint.

8.3.3 Wood: Aluminum surfaces in contact with wood or other similarly absorptive materials, which may become repeatedly wet, and aluminum surfaces in contact with treated wood, shall be given two coats of the aluminum paint

or one coat of heavy-bodied bituminous paint. In lieu of painting the aluminum, the Contractor shall have the option of painting the wood and other absorptive surfaces with two coats of aluminum paint, and sealing the joints with calking compound.

8.4 Cleaning: Upon completion of installation, metal surfaces of doors and frames shall be thoroughly cleaned, following the procedure recommended by the door manufacturer. Abrasive, caustic, or acid cleaning agents shall not be used.

8.5 Protection: During installation, doors, panels and frames shall be protected from damage. Doors, panels and frames that are damaged prior to completion and acceptance shall be restored to their original condition or new replacements shall be provided.

---END---

SECTION 08130. ALUMINUM AUTOMATIC ENTRANCES

1. APPLICABLE PUBLICATIONS: The following publications of the issues listed below, but referred to thereafter by basic designation only, form a part of this specification to the extent indicated by the references thereto:

1.1 Federal Specifications:

QQ-A-200/9C & Am 1	Aluminum Alloy Bar, Rod, Shapes and Tube, and Wire Extruded 6063.
QQ-A-250/2D	Aluminum Alloy, 3003, Plate and Strip.
QQ-A-250/8E	Aluminum Alloy, 5052, Plate and Strip.
QQ-A-250/11E	Aluminum Alloy, 6061, Plate and Strip.
TT-P-38D & Am 1	Paint, Aluminum, Ready-mixed.
TT-P-645	Primer, Paint, Zinc-chromate, Alkyd Type.

1.2 Military Specifications:

MIL-C-18480A & Am 3	Coating Compound, Bituminous Solvent, Coal Tar Base.

1.3 American Society of Testing and Materials (ASTM):

A36-75	Structural Steel.

1.4 National Association of Architectural Metal Manufacturers (NAAMM):

Metal Finishes Manual (Finish Designation). (August 1969)

2. QUALITY CONTROL: Approvals, except those required for field installation, field application and field tests, shall be obtained before delivery of materials to the project site.

2.1 Design Criteria: Entrances shall be designed and anchored to withstand a wind load of 49 pounds per square foot.

3. SUBMITTALS:

3.1 Material Tests and Test Reports: The testing requirements for materials incorporated in referenced documents will be waived provided the manufacturer submits certificates stating that previously manufactured materials have been tested by recognized laboratories, that such materials meet testing requirements specified, and that materials furnished for this project are of the same type, quality, manufacture and make as that tested. Material certificates shall be submitted to and approved by the Contracting Officer. Copies of other test reports need not be submitted, except as specifically requested by the Contracting Officer.

3.2 Shop Drawings: Shop drawings shall be submitted to and approved by the Contracting Officer before proceeding with fabrication. Shop drawings shall indicate elevations of each door and fixed panel type, size of doors and frames, metal gages, details of door and frame construction, methods and spacing of anchorage, glazing details, weatherstripping, hardware, wiring for operators and controls, location of operator and controls, type and rating of operator, safety devices and installation details. Design calculations shall be submitted.

3.3 Descriptive Literature: Manufacturer's descriptive literature shall be furnished with shop drawings and shall consist of detail specifications and instructions for installation, adjustments, cleaning and maintenance.

3.4 Samples: Two 6-inch long samples of aluminum extrusions with specified finish shall be submitted to and approved by the Contracting Officer before work is started.

4. DELIVERY AND STORAGE:

4.1 Protective Coating or Covering: Prior to shipment from the factory, finished surfaces of aluminum shall receive a protective coating or covering. Coating or covering shall not chip, peel, or flake due to temperature or weather and shall protect against discoloration and surface damage from transportation, storage, and construction activities. Coating or covering shall be readily removable without affecting the finish. Covering shall be either adhesive paper, waterproof tape, or strippable plastic. Coating applied to aluminum shall be two sprayed-on coats of clear, water-white, non-yellowing, methacrylate lacquer to a total minimum thickness of 0.4 mil and a maximum thickness of 0.6 mil.

4.2 Storage: Materials delivered to the site shall be inspected for damage, unloaded and stored with a minimum of handling. The storage spaces shall be in dry locations with adequate ventilation, free from dust or water, and shall permit easy access for inspection and handling. Materials shall be stored on floors or platforms in a suitable and approved manner. Doors shall not be covered with tarps, polyethylene film, or similar type coverings, as trapped moisture can stain the metal.

5. MATERIALS:

5.1 Aluminum for Doors and Frames: Aluminum shall consist of extruded shapes and sheet material. Extrusions shall comply with Federal Specification QQ-A-200/9, alloy 6063-T5. Aluminum sheets and strips shall comply with Federal Specification QQ-A-250/2, QQ-A-250/8 or QQ-A-250/11; alloy and temper best suited for the purpose and to produce a finish matching extrusions. Screws, nuts, washers, rivets and other miscellaneous fastening devices shall be of hard aluminum or stainless steel.

5.2 Structural Steel: Steel shall conform to ASTM A36.

5.3 Aluminum Paint: Federal Specification TT-P-38.

5.4 Zinc Chromate Primer: Federal Specification TT-P-645.

5.5 Bituminous Paint: Military Specification MIL-C-18480.

5.6 Hardware:

5.6.1 Doors No. S242 and S242A: Doors shall swing on heavy-duty, ball bearing pivots. All other hardware required for complete operation of the doors shall be furnished by the system manufacturer.

5.6.2 Doors No. S249 and S249A: Doors shall be hung from one piece trussed trolley with built-in rollers operating on a removable steel track. An adjustable cantilever support and pivot assembly shall be provided to allow doors to swing outward for emergency egress without the need for a lower door pivot. A corrosion resistant ball detent latch shall provide easy release of doors when pushed. Swing-out hardware shall be provided for fixed panels to allow doors to break away to provide full instant use of the opening at any point in its cycle in compliance with NFPA 101. Anti-riser stops shall be provided to prevent door from derailing. Doors shall include security hooking devices to latch swing out panels in closed position when sliding doors reach the fully closed position. Lock shall be provided on interior of doors with thumbturn in accordance with NFPA 101. Door holders shall be provided on swing out panels.

5.7 Operators: Swing type operators at Doors No. S242 and S242A and slide type operators at Doors No. S249 and S249A shall be electro-pneumatic type with built-in separate opening and closing pressure regulators, separate opening and closing checking adjustments, power checking adjustments, control of opening and closing speeds, manual operation with power off, guide rod slide carriage for positive piston rod alignment, and fast recycle at any point in stroke.

5.8 Controls:

5.8.1 Push Plate Switch: Recessed switch box with 4 inch x 4 inch stainless steel push plate to activate door opening cycle.

5.8.2 Floor Button Switch: Recessed switch box for casting in concrete floor slab with stainless steel cover plate and single stainless steel push button for pedestrian traffic. Push button shall activate door opening cycle.

5.8.3 Time Delay Switch: Timer adjustable between 3 and 60 seconds to activate door closing cycle. Timer shall start upon activation of door opening cycle.

5.8.4 Sensing Device Control (Doors No. S249 and S249A): Header mounted sensing device with cover finished to match doors and frames. Unit shall include transformer, solid state control circuit and automatic compensation

for line voltage variations. Sensing device shall detect objects moving at two or more inches per second within a semi-circular area approximately 5 feet x 5 feet in size, and shall provide for automatic rejection of fixed objects within the sensing zone. Sensing of objects while doors are closed shall activate opening cycle. Sensing of objects during timer cycle shall reset time delay switch. Sensing of objects during closing cycle shall cause instant reversal from closing to opening cycle and shall reset time delay switch.

5.8.5 Photoelectric Controls (Doors No. S242 and S242A): Photoelectric controls shall be mounted in jambs of doors. Pulses of infrared light shall be generated by a transmitter unit in one jamb and detected by a receiver unit in the other jamb. Interruption of the light pulses shall only reset time delay switch during timer cycle and shall reverse operation from closing to opening cycle. Photoelectric control shall be activated only during opening and closing cycle and shall be deactivated when doors are fully closed.

5.9 Door Control Deactivation Switch: A single switch shall be provided at location indicated to activate and deactivate controls for Doors No. S242 and S242A as specified in paragraph entitled "Door Operation".

5.10 Door Bell: A door bell shall be provided at location indicated.

6. GENERAL REQUIREMENTS: Aluminum doors at Doors No. S242 and S242A shall be electro-pneumatically operated swing type and Doors No. S249 and S249A shall be electro-pneumatically operated sliding type of size and design as shown. Doors shall be complete with frames, framing members, adjoining fixed panels, trim, hardware, operators, controls and other accessories indicated and specified.

6.1 Provisions for Glazing: Tempered heat-absorbing glass for exterior doors and tempered clear glass for interior doors is specified in section entitled "Glass and Glazing". Metal glazing beads, vinyl inserts and glazing gaskets for securing glass shall be supplied by the door manufacturer.

6.2 Anchors: Provide anchors of sizes and shapes indicated or recommended for securing aluminum frames to adjacent construction. Anchors shall be of stainless steel or steel with a hot-dipped galvanized finish. Anchors shall be placed near top and bottom of each jamb and at intermediate points not more than 25 inches apart, unless otherwise required by design criteria. Anchor bottom of each frame to rough floor construction with 3/32 inch thick stainless steel angle clips secured to back of each jamb and to floor construction; use stainless steel bolts and expansion shields for fastening clip anchors.

6.3 Weatherstripping: Provide continuous wool pile type, silicone treated weatherstripping; or a type weatherstripping recommended by the door manufacturer on stiles of exterior doors and fixed panels. Weatherstripping shall be attached to aluminum holders and fitted into slots which are integral

with doors and fixed panels. Weatherstripping shall be easily replaced without special tools. Installation shall allow doors to close positively.

6.4 Finish on Aluminum Surfaces: Finish for aluminum doors and frames shall be AA-M10-C22-A42 color anodized finish in accordance with the requirements of NAAMM's "Metal Finishes Manual". Finish color shall be black. Finish shall match in appearance or fall within the two extremes of color range of the approved samples.

7. FABRICATION:

7.1 Welding and Fastening: Where possible, locate welds on unexposed surfaces. Welds on exposed surfaces shall be dressed smooth. Welding rods, filler wire and flux shall be carefully selected to produce a uniform texture and color in finished work. Remove flux and spatter from surfaces immediately after welding. Exposed screws or bolts will be permitted only at inconspicuous locations, and shall have heads countersunk.

7.2 Fabrication of Aluminum Frames: Aluminum frames shall be fabricated of extruded aluminum shapes. Minimum metal wall thickness for aluminum frames shall be 0.125 inch. Joints in frame members shall be milled to a hair line watertight fit, reinforced and either welded along concealed lines of contact or secured mechanically and by concealed welding. Shapes shown are representations of design, function and required profile. Dimensions shown are minimum. Shapes of equivalent design, dimensions, profile and function may be submitted. Such shapes shall be subject to approval of samples by the Contracting Officer.

7.3 Fabrication of Aluminum Doors: Doors shall be of type, size and design indicated and not less than 1-3/4 inches thick. Door sizes shown are nominal and shall include standard clearances. Doors shall have stiles and rails as shown and shall be fabricated from extruded aluminum seamless tubes or from a combination of open-shaped members interlocked or welded together. Top and bottom rail shall be fastened by welding, or by means of dove-tailed type clips and 3/8 inch diameter cadmium plated steel tension rods running the full length of the rails and secured with tension plates and lock nuts. Extruded aluminum snap-in glazing beads shall be provided on interior side of doors. Extruded aluminum theft-proof snap-in glazing beads or fixed glazing beads shall be provided on exterior or security side of doors. Glazing beads shall have vinyl insert glazing gaskets. Glazing beads shall be designed to receive 1/4 inch thick glass.

8. DOOR OPERATION:

8.1 Doors No. S242 and S242A: Except as specified below, both doors shall open simultaneously by push plate or floor button from exterior and by either a wall mounted or panel mounted push plate from interior. Doors shall close when time delay sequence is ended. A photoelectric control in the jamb of each door shall prevent either door from closing while there is movement within the doors. The photoelectric control shall not cause the doors to open

if they are closed. The door control deactivation switch shall deactivate completely the interior wall mounted push plate, the exterior push plate and the exterior floor button. During door control deactivation, doors shall open only by interior panel mounted push plate. During door control deactivation, an interior door bell shall sound when the exterior push plate or floor button is depressed.

8.2 Doors No. S249 and S249A: Both doors shall open in sequence by push plate from exterior and by push plate from interior. Doors shall close when time delay sequence is ended. A sensing device over each door shall prevent the door over which it is mounted from closing while there is movement in the sensing zone, or shall cause the door to open if it is closed and movement is detected.

9. INSTALLATION:

9.1 Frames and Framing Members: Frames and framing members to receive doors and adjoining fixed panels shall be set accurately in position, plumb, square, level and in alignment. Frames shall be securely anchored to adjacent construction in accordance with the design criteria specified herein, approved shop drawings, and manufacturer's printed instructions.

9.2 Doors, Operators and Controls: Doors, operators, control devices, conduit, fittings, wiring, voltage-matching transformers, pneumatic piping, connecting hardware and accessories shall be installed in accordance with manufacturer's instructions and approved shop drawings. All anchors and inserts for guides, brackets, operators, switches and other work shall be located accurately. Electrical service of the indicated characteristics will be provided at each door including a fusible disconnect switch with fuses. Provide all necessary power and control connections required on the load side of the disconnect switch, provide all wire required and pull wire through conduit provided under Division 16. Electrical workmanship shall conform to Division 16. Air piping will be provided to a valve at each door. Provide all necessary piping, valves, fittings and accessories required to connect operators to air supply. Materials and workmanship shall conform to Division 15. After installation and connection, adjust and lubricate operators, hardware and controls to insure that doors function properly. Upon completion, doors shall be weathertight and shall be free from warp, twist or distortion.

9.3 Protection of Aluminum from Dissimilar Materials:

9.3.1 Dissimilar Metals: Where aluminum surfaces come in contact with metals other than stainless steel, zinc, or white bronze, aluminum surfaces shall be insulated from direct contact with incompatible metals by one or a combination of the following methods:

(a) Painting the dissimilar metal with one coat of heavy-bodied bituminous paint.

(b) Applying a synthetic butyl rubber calking material between the aluminum and the dissimilar metal.

(c) Painting the dissimilar metal with a prime coat of zinc-chromate primer, or other suitable primer, followed by one coat of aluminum paint or other suitable protective coating, excluding those containing lead pigmentation.

(d) Use of a nonabsorptive tape or gasket in permanently dry locations.

9.3.2 Drainage from Dissimilar Metals: Dissimilar metals used in locations where drainage from them passes over aluminum shall be painted as specified in (3) above, to prevent staining of aluminum.

9.3.3 Masonry and Concrete: Aluminum surfaces in contact with mortar, concrete, or other masonry materials shall be given one coat of heavy-bodied bituminous paint.

9.3.4 Wood: Aluminum surfaces in contact with wood or other similarly absorptive materials, which may become repeatedly wet, and aluminum surfaces in contact with treated wood, shall be given two coats of the aluminum paint or one coat of heavy-bodied bituminous paint. In lieu of painting the aluminum, the Contractor shall have the option of painting the wood and other absorptive surfaces with two coats of aluminum paint, and sealing the joints with calking compound.

9.4 Cleaning: Upon completion of installation, metal surfaces of doors and frames shall be thoroughly cleaned, following the procedure recommended by the door manufacturer. Abrasive, caustic, or acid cleaning agents shall not be used.

9.5 Protection: During installation, doors and frame shall be protected from damage. Doors and frames that are damaged prior to completion and acceptance shall be restored to their original condition or new replacements shall be provided at no additional cost to the Government.

---END---

SECTION 08165. AUTOMATIC DOOR OPERATORS

1. QUALITY CONTROL: Approvals, except those required for field installation, field application and field tests, shall be obtained before delivery of materials to the project site.

2. SUBMITTALS:

2.1 Materials Tests and Test Reports: The testing requirements for materials incorporated in referenced documents will be waived provided the manufacturer submits certficates stating that previously manufactured materials have been tested by recognized laboratories, that such materials meet testing requirements specified, and that the materials furnished for this project are of the same type, quality, manufacture and make as that tested. Material certificates shall be submitted to and approved by the Contracting Officer. Copies of other test reports need not be submitted except as specifically requested by the Contracting Officer.

2.2 Shop Drawings: Shop drawings shall be submitted to and approved by the Contracting Officer before proceeding with fabrication. Shop drawings shall indicate type and size of operators, methods of anchorage, wiring for operators and controls, location of operators and controls, safety devices and installation details.

2.3 Descriptive Literature: Manufacturer's descriptive literature shall be furnished with shop drawings and shall consist of detail specifications and instructions for installation, adjustments, cleaning and maintenance.

3. STORAGE: Materials delivered to the site shall be inspected for damaged, unloaded and stored with a minimum of handling. The storage spaces shall be in dry locations with adequate ventilation, free from dust, or water, and shall permit easy access for inspection and handling. Materials shall be stored on floors or platforms in a suitable and approved manner. Units shall not be covered with tarps, polyethylene film, or similar type of coverings.

4. MATERIALS:

4.1 Operators: Operators shall be header mounted electro-pneumatic type, enclosed in prime coated sheet steel cover concealing operator mechanism and mounting brackets. Operators shall have pneumatic power opening and spring power closing, and shall have fully adjustable opening and closing speeds. Operators shall have checking mechanism providing cushioning action at last part of door travel, in both opening and closing cycles. Operators shall recycle doors instantaneously to full open position in any point in closing cycle when opening cycle is reactivated. Operators shall be designed so that when power to operator is interrupted or shut-off, doors may be easily opened manually without damage to automatic operator system.

4.2 Controls:

4.2.1 Push Plate Switch: Recessed switch box with 4 inch x 4 inch stainless steel push plate to activate door opening cycle.

4.2.2 Time Delay Switch: Timer adjustable between 3 and 30 seconds to activate door closing cycle. Timer shall start upon activation of door opening cycle.

4.2.3 Sensing Device Control: Header mounted sensing device with prime painted steel cover. Unit shall include transformer, solid state control circuit and automatic compensation for line voltage variations. Sensing device shall detect objects moving at two or more inches per second within a semi-circular area approximately 5 feet x 5 feet in size, and shall provide for automatic rejection of fixed objects within the sensing zone. Sensing of objects while doors are closed shall activate door opening cycle. Sensing of objects during timer cycle shall reset time delay switch. Sensing of objects during closing cycle shall cause instant reversal from closing to opening cycle and shall reset time delay switch.

4.2.4 Photoelectric Controls: Photoelectric controls shall be mounted in jambs of doors. Pulses of infrared light shall be generated by a transmitter unit in one jamb and detected by a receiver unit in the other jamb. Interruption of the light pulses shall reset time delay switch during timer cycle and shall reverse operation from closing to opening cycle.

4.2.5 Door Control Deactivation Switch: A single switch shall be provided at locations indicated to activate and deactivate the controls for doors as specified in paragraph entitled "Door Operation".

5. DOOR OPERATION: Operation of pneumatically operated swinging doors shall be as specified below. Location of door opening controls shall be as indicated on the Drawings.

5.1 Doors No. C159, C226A, C246, C264 and C264A shall open by any of three push plate switches, and shall close by time delay switch. Each door shall have photoelectric safety device. Provide control deactivation switches at Doors No. C159 and C264.

5.2 Doors No. S205A, S215B, S226A and S242B shall open by either of two push plate switches, and shall close by time delay switch. Each door shall have photoelectric safety device. Provide control deactivation switches at Doors No. S205A, S215B and S226A.

5.3 Door No. C232 shall open by any of four push plate switches, and shall close by time delay switch. Door shall have photoelectric safety device and control deactivation switch.

5.4 Door No. C226 shall open by one push plate switch and shall close by time delay switch. Door shall have photoelectric safety device.

5.5 Door No. C264B shall open by one push plate switch or by one sensing device, and shall close by time delay switch. Door shall have photoelectric safety device.

6. INSTALLATION: Operators, control devices, conduit, wiring, voltage-matching transformers, pneumatic piping, fittings, connecting hardware and accessories shall be installed in accordance with manufacturer's instructions and approved shop drawings. All anchors and inserts for brackets, operators, switches and other work shall be located accurately. Electrical service of the indicated characteristics will be provided at each door, including a fusible disconnect switch with fuses. Provide all necessary power and control connections required on the load side of the disconnect switch, provide all wire required and pull wire through conduit provided under Division 16. Electrical workmanship shall conform to Division 16. Air piping will be provided to a valve at each door. Provide all necessary piping, valves, fittings and accessories required to connect operators to air supply. Materials and workmanship shall conform to Division 15. After installation and connection, adjust and lubricate operators and controls to insure that operators function properly.

---END---

SECTION 08210. WOOD DOORS

1. APPLICABLE PUBLICATIONS: The following publications of the issues listed below, but referred to thereafter by basic designation only, form a part of this specification to the extent indicated by the references thereto:

1.1 National Woodwork Manufacturers Association (NWMA) Publications:

I.S.1-73 Industry Standard for Hardwood Veneered Including Hardboard and Plastic Faced-Flush Doors.

1.2 Underwriters' Laboratories, Inc. (UL) Publication:

Building Materials Directory (1976).

2. QUALITY CONTROL: Approvals, except those required for field installations, field applications and field tests, shall be obtained before delivery of material or equipment to the project site.

3. SUBMITTALS:

3.1 Shop Drawings: Shop drawings, catalog cuts, or descriptive material showing each type of door unit shall be submitted to and approved by the Contracting Officer before work is started. Drawings and cuts shall indicate sizes, thickness, construction, methods of assembly, sticking, glazing, door louvers, and all other necessary information.

3.2 Samples of Doors: Prior to the delivery of wood doors, a sample section of each type of door which shows the stile, rail, veneer, core construction, and finish shall be submitted to and approved by the Contracting Officer before work is started.

4. DELIVERY AND STORAGE: Doors shall be delivered to the site in an undamaged condition and shall be protected against damage and dampness. They shall be stored under cover in a well-ventilated building and shall not be exposed to extreme changes of temperature and humidity. They shall not be stored in a building under construction until concrete, masonry work, and plaster are dry. Defective or damaged doors shall be replaced by the Contractor at no expense to the Government.

5. GENERAL REQUIREMENTS:

5.1 Grading Marking and Labeling: Each door shall be marked with a stamp, brand, or label in accordance with the requirements of the applicable referenced publication or standard.

5.2 Sizes and Designs: Doors shall be of the sizes, designs, and thicknesses as indicated and as specified herein.

6. MATERIALS AND CONSTRUCTION:

6.1 Interior Doors: Interior doors shall be fabricated with either Type I or Type II glue bond. All rabbeted edged doors shall have field applied neoprene sponge seals, with self adhesive backing, as indicated.

6.1.1 Interior Flush Doors: Interior flush doors shall be solid composition board core, Type II flush doors conforming to NWMA I.S.1. Doors shall have hardwood veneered faces of premium grade rift cut red oak. Unless scheduled to receive PVC edges, stile edge bands of doors shall be of the same species and color as the face veneers; finger-jointed edge band will not be permitted. Stiles and rails shall be glued to core, under pressure, before applying cross bands and face veneers.

6.1.2 Plastic Laminate Faced Flush Doors: Plastic laminate faced doors shall be solid composition core construction conforming to the requirements of NWMA I.S.1. Doors shall be faced and stile edges with plastic laminate. Color of plastic laminate shall be as scheduled.

6.1.3 Composite Fire Doors: Fire doors shall be either hardwood veneered with rift cut red oak or plastic laminate as scheduled. In addition to meeting the applicable requirements of NWMA I.S.1, doors specified or indicated to have a fire rating shall conform to the requirements of the Underwriters' Laboratories, Inc. for the class of door indicated. The label of the Underwriters' Laboratories or listing in the UL Building Materials Directory will be accepted as evidence of conforming to this requirement. In lieu of the Underwriters' Laboratories label and listing, an affidavit may be submitted from an approved nationally recognized testing agency, certifying that the type of door furnished has been tested and conforms to the published standard, including methods of test, of the Underwriters' Laboratories, Inc.

6.1.4 Lead Lined Flush Doors: Lead lined wood doors shall be interior type, premium grade, X-ray resistant, solid core conforming to NWMA I.S.1. Door shall have either hardwood veneered faces of premium grade rift cut red oak or plastic laminate as scheduled. Lead sheets shall be same thickness as required for adjacent walls. Sheets shall be one piece, continuous from edge to edge of door and from top to bottom of door, and shall be an integral part of the door. Lead sheets may be in the core, between the core and crossbanding, or between the crossbanding and the face veneer, at the option of the manufacturer.

6.2 Door Louvers: Louvers for all wood doors shall be metal and are specified in section entitled "Metal Door Louvers". Louvers shall be mounted in oak veneered doors with flush wood moulding of the same species and color as the face veneers. Louvers mounted in plastic laminate doors shall have flush wood plastic laminate covered moulding to match door facings.

6.3 Door Light Openings: Glazed openings in oak veneered doors shall be provided with wood mouldings of the same species and color as the face

veneers. Glazed openings in plastic laminate doors shall be provided with metal mouldings. Mouldings in fire doors shall be of the UL approved type.

6.4 Glazing: Factory glazing shall conform to the requirements of the applicable publication or standard. Field glazing is specified in section entitled "Glass and Glazing".

6.5 Frames: Metal frames for wood doors are specified in section entitled "Hollow Metal Doors and Frames".

6.6 PVC Edges: Where scheduled, oak veneered doors shall have factory installed PVC edges on both stiles. PVC edges shall be extruded shapes with lock strips on back side to lock into continuous slots cut into door stiles. Edges shall be permanently bonded to stiles and set flush with each face of door.

6.7 Prefitting: Doors shall be completely sized, undercut where scheduled and machined at the factory by the door manufacturer. The work shall include sizing, undercutting, bevelling edges, mortising and drilling for all hardware and providing all necessary openings for glass and louvers. The Contractor shall provide the door manufacturer with the necessary hardware samples and frame and hardware schedules as necessary to coordinate the work.

6.8 Prefinishing: All oak veneer doors shall be natural finished at the factory by the door manufacturer. Natural finish shall consist of one coat of sealer and two coats of clear urethane. All edges, cutouts, trim and wood accessories shall receive same finish as doors.

7. INSTALLATION: Doors shall be hung with a 1/16-inch minimum, 1/8-inch maximum clearance at sides and top, and a 3/16-inch minimum, 1/4-inch maximum clearance over thresholds. Unless scheduled to be undercut, provide 3/8-inch minimum 7/16-inch maximum clearance at bottom where no thresholds occur. Hardware is specified in section entitled "Finish Hardware".

---END---

SECTION 08240. ARCHITECTURAL WOOD DOOR WITH GLASS-METAL CLAD

1. APPLICABLE PUBLICATIONS: The following publications of the issues listed below, but referred to thereafter by basic designation only, form a part of this specification to the extent indicated by the references thereto:

1.1 Federal Specifications:

DD-G-1403B & Am 1	Glass, Plate (Float), Sheet, Figured, and Spandrel (Heat Strengthened and Fully Tempered).

1.2 American Society for Testing and Materials (ASTM) Publications:

A167-74	Stainless and Heat-resisting Chromium-nickel Steel Plate, Sheet, and Strip.
A480-75	Flat-rolled Stainless and Heat-resisting Steel Plate, Sheet, and Strip.

2. QUALITY CONTROL: Approvals, except those required for field installation, field application and field tests, shall be obtained before delivery of materials to the project site.

3. SUBMITTALS:

3.1 Tests and Certificates: The testing requirements for materials incorporated in referenced documents will be waived provided the Contractor submits certificates from the manufacturer stating that materials furnished for this project conform to all requirements of this specification and the referenced documents. Material certificates shall be submitted to and approved by the Contracting Officer. Copies of other test reports need not be submitted except as specifically requested by the Contracting Officer.

3.2 Shop Drawings: Shop drawings shall be submitted to and approved by the Contracting Officer before work is started. Drawings shall show types, sizes, locations, metal gages, hardware provisions, installation details, and other details of construction.

3.3 Samples: One full size corner samples of doors showing construction and with finish as specified including a sample of door stile trim and glass, shall be submitted to and approved by the Contracting Officer before work is started.

4. DELIVERY AND STORAGE: Metal clad doors shall be delivered to the job site wrapped in a protective covering, with the brands and names clearly marked thereon. Doors shall be stored in dry locations with adequate ventilation, free from dust or water, and in such a manner as to permit easy access for inspection and handling. Doors shall be handled with care to

prevent damage to the faces, edges, and ends. Damaged items that cannot be restored to like-new condition shall be replaced at no additional cost to the Government.

5. GENERAL REQUIREMENTS: Architectural wood doors with glass-metal clad shall be by a manufacturer normally engaged in the production of this type of product. Warnel 7 System doors manufactured by Forms and Surfaces is a product meeting the requirements of this specification.

5.1 Materials and Construction: Each face of the door shall be hydroformed from a single sheet of .036 inch thick, 304 alloy stainless steel conforming to ASTM A167. Stainless steel finish shall be No. 4 satin grain conforming to ASTM A480. Hydroformed metal sheets shall be bonded to a subframe consisting of a lumber core faced both sides with 1/8 inch plywood. Door size shall be as indicated.

5.2 Glazing: Doors shall be glazed with 1/4 inch gray tempered heat absorbing glass conforming to Federal Specification DD-G-1403, Kind FT, Condition A, Type I, Class 2, Style B. The system shall include setting of the glass in a moulded neoprene structural glazing gasket with zip-lock. Zip-lock strip shall be on the interior side of the door.

5.3 Door Stile Trim: Door stile trim shall be manufacturer's standard of black anodized aluminum extrusions. At exterior pairs of doors provide black anodized aluminum weatherseal astragals, and weatherstripping.

5.4 Door Pulls: Provide at each door leaf, two clear acrylic doorpulls. Pulls shall be 1.18 inches in diameter and 10.63 inches long, center to center of anchorage. Pulls shall be installed back to back.

5.5 Hardware Preparation: Door manufacturer shall prepare and reinforce doors to receive door hardware specified in section entitled "Finish Hardware".

6. INSTALLATION: Install doors at locations indicated, level, square, plumb and at proper elevations and in alignment with other work. After erection and glazing, hardware shall be adjusted to operate properly.

---END---

SECTION 08301. VAULT DOORS

1. APPLICABLE PUBLICATIONS: The following publications of the issues listed below, but referred to elsewhere by basic designation only, form a part of this specification to the extent indicated by the references thereto:

1.1 Federal Specifications:

AA-D-600B & Int Am 4	Door, Vault, Security.

2. QUALITY CONTROL: Approval, except those required for field installations, field applications and field tests, shall be obtained before custom fabrication is started and before delivery of material or equipment to the project site.

3. SUBMITTALS:

3.1 Shop Drawings: Shop drawings for vault doors shall be submitted to and approved by the Contracting Officer before delivery of materials to the site. Shop drawings shall show sizes, locations, metal gages, hardware, installation details, and other details of construction.

3.2 Materials Tests and Test Reports: The testing requirements for materials incorporated in referenced documents will be waived provided the manufacturer submits certificates stating that previously manufactured materials have been tested by recognized laboratories, that such materials meet testing requirements specified, and that the materials furnished for this project are of the same type, quality, manufacture and make as that tested. Material certificates shall be submitted to and approved by the Contracting Officer. Copies of other test reports need not be submitted except as specifically requested by the Contracting Officer.

4. DELIVERY AND STORAGE: Materials shall be handled and shipped in a manner to protect same from damage and stored in a clean, properly drained location out of contact with the ground. All damaged material shall be replaced or repaired in an approved manner by and at the expense of the Contractor.

5. GENERAL REQUIREMENTS: Vault doors shall be by a manufacturer normally engaged in the production of this type of product and shall include all necessary hardware, frames, attachments, floor plates, and other accessories necessary for installation and operation.

5.1 Door and Frame: Vault doors and frames shall conform to Fed. Spec. AA-D-600, Class 5, Type 1, Style K.

5.2 Day Gate: Provide manufacturer's standard day gate designed for use with vault door furnished. The gate shall swing into the vault and shall be

hinged on the same side as the vault door. The gate shall be self-closing and shall have a self-locking device operable by key from outside, and by knob or handle from inside.

6. INSTALLATION: Installation shall be in accordance with the manufacturer's published recommendations and approved shop drawings.

---END---

SECTION 08330. COILING STEEL SERVICE DOORS

1. APPLICABLE PUBLICATIONS: The following publications of the issues listed below, but referred to thereafter by basic designation only, form a part of this specification to the extent indicated by the references thereto:

1.1 Federal Specifications:

CC-M-1807	Motor, Alternating-current, Fractional and Integral Horsepower (500 HP and Smaller).

1.2 Military Specification:

MIL-P-21035 & Am 1	Paint, High Zinc Dust Content, Galvanizing Repair.

1.3 American Society for Testing and Materials (ASTM) Publications:

A386-73	Zinc Coating (Hot Dip) on Assembled Steel Products.
A525-76	General Requirements for Zinc-coated (Galvanized) Steel Sheets by the Hot Dip Process).

1.4 National Electrical Manufacturers' Association (NEMA) Publications:

ICS-70	Industrial Control Standards (Current Issue).
ST1-72	Standards for Specialty Transformers (Current Issue).

2. QUALITY CONTROL: Approvals, except those required for field installations, field applications and field tests, shall be obtained before delivery of material or equipment to the project site.

3. SUBMITTALS:

3.1 Shop Drawings: Shop drawings for all doors and frames shall be submitted to and approved by the Contracting Officer before work is started. Drawings shall show types, sizes, locations, metal gages, hardware provisions, installation details, and other details of construction. Shop drawings for motor-operated doors shall include wiring for motors, supporting brackets for motors, location of motor and controls, type and ratings of motor, and safety devices.

3.2 Manufacturer's Installation Procedures: Before work is started, manufacturer's currently recommended installation procedures, in triplicate for doors shall be submitted to and approved by the Contracting Officer prior to commencement of work. Installation procedures shall accompany the shop drawings.

3.3 Certificates of Conformance or Compliance: Before delivery of doors and accessories, certificates, in triplicate, attesting that doors and

accessories meet the requirements specified shall be submitted to and approved by the Contracting Officer.

4. DELIVERY AND STORAGE: Doors shall be delivered to the job site wrapped in a protective covering, with the brands and names clearly marked thereon. Doors shall be stored in dry locations with adequate ventilation, free from dust or water, and in such a manner as to permit easy access for inspection and handling. Doors shall be handled with care to prevent damage to the faces, edges, and ends. Damaged items that cannot be restored to like-new condition shall be replaced at no additional cost to the Government.

5. COILING STEEL SERVICE DOORS:

5.1 Coiling (Rolling) Steel Service Doors (Exterior):

5.1.1 General Description of Type and Operation: Coiling steel service doors shall be provided where indicated. Doors shall be spring counter-balanced, overhead rolling type, and shall be designed for use on exterior openings, as indicated. Doors shall be manually operated by means of chain and gears, and electric-power operated with auxiliary chain-gear operation. Doors shall be complete with all guides, hardware, fastenings, operating mechanisms and accessories. Doors shall be surface mounted type with guides as jambs set back a sufficient distance to provide a clear opening when door is in open position. Exterior doors shall be mounted as indicated. Where service doors in excess of 80 square feet are indicated to be chain operated, provision shall be made in the door design and construction that will permit future installation of electric power operation. Exterior doors shall be designed to withstand a wind pressure of 41.0 pounds per square foot of door area without damage.

5.1.2 Curtains: Curtains shall be formed of interlocking flat steel slats of gage specified for exterior doors. Curtain shall roll up on a drum supported at head of opening on brackets and be balanced by helical springs. Unless design requirements dictate otherwise, slats for doors less than 12 feet wide shall be not lighter than 22 gage; and slats for doors over 12 feet wide shall be not lighter than 20 gage.

5.1.3 Endlocks and Windlocks: Each end of each slat for exterior doors shall have malleable iron endlocks and windlocks of manufacturer's stock design. Windlocks shall prevent curtain from leaving guide because of deflection from wind pressure or other forces.

5.1.4 Bottom Rail: The curtain shall have a rolled-steel bottom bar consisting of two angles of equal weight, one on each side, fastened to bottom of curtain. In addition, exterior doors shall have a compressible and replaceable rubber, neoprene, or vinyl weather seal attached to bottom rail. A combination compressible seal and safety device for stopping and reversing the travel of the door shall be attached to the bottom rail of doors that are electric power operated.

5.1.5 Finish: Finish shall be as specified herein. Slats, bottom rail, and hood of all rolling doors shall be hot-dipped galvanized and shop primed; all other parts or rolling doors shall be given a shop prime finish.

5.1.6 Guides: Guides shall consist of steel structural shapes or formed steel shapes, not less than 2-1/2 inches deep and not less than 3/16-inch thick and shall form a channel pocket of sufficient depth to retain the curtain in place under the wind pressure specified. Guides shall be securely attached to adjoining construction with 3/8-inch diameter bolts, spaced near each end and not over 24 inches apart. At exterior doors provide neoprene weatherstripping on one side of each guide to close space between guide and curtain.

5.1.7 Roller Shaft: Shaft shall be constructed of steel pipe or commercial welded steel tubing of proper diameter and thickness for the size of curtain. Deflection shall not exceed 0.03-inch per foot of span. Ends of roller shall be closed with cast iron plugs, machined to fit the pipe. Plugs shall be either pinned or attached with screws in the spring barrel; welding shall not be used. An oil-tempered, helical, counterbalancing steel spring, capable of producing sufficient torque to assure easy operation of the door curtain from any position, shall be installed within the roller. At least 80 percent of the door weight shall be counterbalanced at any position. Doors having an area greater than 80 square feet shall be made for spring-tension adjustment from outside of bracket without removing the hood.

5.1.8 Brackets: Brackets shall be fabricated of heavy cast iron or steel designed to close the ends of roller-shaft housing, and to form a supporting ring for hood. Bracket hubs or shaft plugs shall be equipped with prelubricated ball bearings, shielded or sealed.

5.1.9 Hoods: Hoods shall be constructed of steel not lighter than 24-gage, formed to fit contour of end brackets and reinforced with steel rods, or rolled beads at top and bottom edges. Hoods for opening more than 12 feet in width shall have intermediate supporting brackets. A weather baffle shall be provided at the lintel of each exterior door.

5.1.10 Locking Device: Each manually operated exterior rolling door shall be fitted with manufacturer's standard chain- or bar-type locking device on inside. The locking device shall be of type to receive a padlock with a 5/16-inch diameter shackle.

5.1.11 Manual Hand-chain Operation: Chain shall be galvanized, endless type, operating over a sprocket and shall extend to within 3 feet of floor. Gears shall be high-grade gray iron, cast from machine-cut patterns. Gear reduction shall be calculated to reduce pull required on hand chain to not over 35 pounds.

5.1.12 Electric-power Operation: Doors indicated to have electric power operators shall be complete with electric motors, operators, controls, switches, transformers and safety devices as specified herein.

5.2 Rolling Steel Fire Doors (Interior):

5.2.1 General Description: Rolling steel fire doors shall be provided where indicated and shall be the spring counter-balanced overhead type. Doors shall be designed to remain in closed position but, permit normal operation for passage and be equipped with a self-closing device. Doors shall be manually operated by chain and gears. Doors shall be self-closing type which shall close automatically upon fusing of the 160 degree f. fusible link. Doors shall be complete with all guides, hardware, operating mechanisms, fusible links, hoods, housings and accessories.

5.2.2 Construction: The construction of rolling steel fire doors shall be as specified herein. All modifications in construction necessary to obtain the levels or meet the fire requirements specified herein take precedence.

5.2.2.1 Curtains: Curtains shall be formed of interlocking steel slats of gage required by Underwriters' Laboratories, Incorporated. Curtain shall roll up on a drum supported at head of opening on brackets and be balanced by helical springs.

5.2.2.2 Endlocks: The ends of each slat shall have malleable iron endlocks conforming to Underwriters' Laboratories, Incorporated, specifications.

5.2.2.3 Bottom Rail: The curtain shall have a rolled-steel bottom bar consisting of two angles of equal weight, one on each side, fastened to bottom of curtain.

5.2.2.4 Finish: Finish shall be as specified herein. Slats, bottom rail, and hood of rolling doors shall be hot-dipped galvanized and shop primed; all other parts of doors shall be given a shop primed finish.

5.2.2.5 Guides: Guides shall consist of steel structural shapes or formed steel shapes, not less than 2-1/2 inches deep and not less than 2-1/2 inches deep and not less than 3/16-inches thick and shall form a channel pocket of sufficient depth to retain the curtain in place. Guides shall be securely attached to adjoining construction with 3/8-inch diameter bolts, spaced near each end and not over 24 inches apart.

5.2.2.6 Roller Shaft: Roller shaft shall be constructed of steel pipe or commercial welded steel tubing of proper diameter and thickness for the size of curtain. Deflection shall not exceed 0.03-inch per foot the size of span. Ends of roller shall be closed with cast iron plugs, machined to fit the pipe. Plugs shall be either pinned or attached with screws in the spring barrel; welding shall not be used. An oil-tempered, helical, counterbalanced steel spring, caapble of producing sufficient torque to assure easy operation of the door curtain from any position, shall be installed within the roller. At least 80 percent of the door weight shall be counterbalanced at any position.

5.2.2.7 Brackets: Brackets shall be fabricated of heavy cast iron or steel, designed to close the ends of roller-shaft housing, and to form a supporting ring for hood. Bracket hubs or shaft plugs shall be equipped with prelubricated ball bearings, shielded or sealed.

5.2.2.8 Hoods: Hoods shall be constructed of steel not lighter than 24-gage, formed to fit contour of end brackets and reinforced with steel rods, or rolled beads at top and bottom edges. Hoods shall have intermediate supporting brackets. Hoods shall be provided with an automatic closure that will prevent passage of flange around head of door.

5.2.2.9 Locking Device: Each manually operated interior rolling door shall be fitted with manufacturer's standard chain- or bar-type locking device on inside. The locking device shall be of type to receive a padlock with a 5/16-inch diameter shackle.

5.2.2.10 Automatic Closing Device: In addition to the requirements specified herein, doors shall be equipped with an automatic closing mechanism and a release device which is actuated by fusible links in case of fire. Upon fusing of link, the door curtain shall be started downward by shock torque-action of a helical steel spring released in the automatic closing mechanism. Downward descent of door curtain shall be controlled by an oscillating safety governor so that it will come to rest on the sill without impact. Spring shall exert continuous down pressure on the door curtain until door is reset. Automatic closing mechanism shall not affect operation of the door in general service.

5.2.2.11 Manual Hand-chain Operation: Chain shall be galvanized, endless type, operating over a sprocket and shall extend to within 3 feet of floor. Gears shall be high-grade gray iron, cast from machine-cut patterns. Gear reduction shall be calculated to reduce pull required on hand chain to not over 35 pounds.

5.3 Electric-power Operators:

5.3.1 General Requirements: Electric-power operators for exterior doors shall be of type recommended by the door manufacturer and shall be complete with electric motor, machine-cut reduction gears, magnetic brake, brackets, push button controls, limit switches, magnetized reversing contactor, and other accessories specified or necessary. The operator shall be so designed that the motor may be removed without disturbing the limit-switch timing and without affecting the emergency auxiliary operators. The operator shall be provided with slipping clutch coupling to prevent stalling the motor. Provision shall be made for immediate emergency manual operation of door, by chain-gear mechanism in case of electrical failure. The emergency manual operating mechanism shall be so arranged that it may be put in, and out of, operation from the floor, and its use shall not affect the timing of the limit switches. An electrical or mechanical device shall be provided, which will

disconnect the motor from the operating mechanism when the emergency manual operating mechanism is engaged.

5.3.2 Motors: Motors shall be high-starting torque, reversible type, of sufficient horsepower and torque output to move the door in either direction from any position, and produce a door travel speed of not less than two-thirds or more than one foot per second, without exceeding the rated capacity. Motors shall conform to CC-M-1807 and shall be suitable for operation on 460 volts, 60 Hertz, 3 phase current and shall operate at not more than 3600 rpm. Motor enclosures shall be the dripproof type. Motors shall be installed in approved locations.

5.3.3 Controls: Each door motor shall have an enclosed reversing across-the-line type magnetic starter having thermal-overload protection, solenoid-operated brake, limit switches, and remote control switches, at locations indicated. Remote control switches shall be at least 5 feet above the floor line, and all switches shall be located so that the operator will have complete visibility of the door at all times. The control equipment shall conform to NEMA ICS-76; enclosures shall be type 12 (industrial use). Control switches shall be located inside the building as indicated. Each switch control station shall be of the three-button type, with the buttons marked "OPEN, "CLOSE", and "STOP". The "OPEN" and "STOP" buttons shall be of the type requiring only momentary pressure to operate. The "CLOSE" button shall be of the type requiring constant pressure to maintain the closing motion of the door. When the door is in motion, and the "STOP" button is pressed, the door shall stop instantly and remain in the stop position; from the stop position, the door may then be operated in either direction by the "OPEN" or "CLOSE" buttons. Push buttons shall be of the full-guarded type to prevent accidental operation. Limit switches shall be provided to automatically stop the doors at their fully open and closed positions. Positions of the limit switches shall be readily adjustable.

5.3.4 Safety Device: The bottom horizontal edge of vertical traveling doors that are power operated shall have a safety device that will immediately stop and reverse the door in its closing travel upon contact with an obstruction in the door opening and cause the door to return to its full open position. The safety device shall not substitute for a limit switch.

5.3.5 Transformer: A control transformer shall be provided in power circuits as necessary to reduce the voltage on the control circuits to 120 volts. The transformer shall conform to NEMA ST1-72.

5.3.6 Electrical Work: All manual or automatic control devices, and all conduit and wiring from the motor to controls necessary for the proper operation of the doors, shall be provided. Flexible connections between doors and fixed supports shall be made with extra-flexible type SO cable. The cable shall have a spring-loaded automatic take-up reel or equivalent device. Electrical wiring for power from the power source to the controls shall comply with section entitled "Interior Electrical Systems".

5.4 Finish Requirements:

5.4.1 Primed Finish for Metal Surfaces: Doors specified herein to receive primed finish shall be cleaned thoroughly, treated to assure maximum paint adherence, and given a factory dip or spray coat of rust-inhibitive metallic oxide or synthetic resin primer on all exposed surfaces. The primer shall be the manufacturer's standard type. All doors shall be given a phosphate treatment prior to application of prime coat.

5.4.2 Galvanized and Shop-primed Finish: Surfaces specified shall have a galvanized finish, a phosphate treatment, and a shop prime coat of rust-inhibitive paint. Where individual items are specified to have only a hot-dip galvanized finish, the phosphate treatment and prime coat shall be omitted. The galvanized coating shall conform to ASTM A525 for steel sheets and ASTM A386 for assembled steel products. The minimum weight of coating for steel sheets shall be 5/8 ounce per square foot of surface on each side (1.25 oz. total both sides). The weight of coatings for assembled products shall be as designated in table I of ASTM A525 for the class of material to be coated. The phosphate treatment shall be a type standard with, or as recommended by, the manufacturer. The prime coat shall be a type especially developed for materials treated by phosphates and adapted to application by dipping or spraying. Zinc-coated surfaces that are damaged shall be repaired by specification MIL-P-21035 and spot primed.

6. INSTALLATION: Manufacturer or his authorized representative shall install, connect and place in successful operation all doors, operators, control devices, conduit, fittings, wiring, voltage matching transformers, connecting hardware and accessories in accordance with UL requirements, manufacturer's instruction details and approved shop drawings. All anchors and inserts for guides, brackets, motors, switches and other work shall be located accurately. Electrical service of the indicated characteristics will be provided at each door including a fusible disconnect switch with fuses. Provide all necessary power and control connections required on the load side of the disconnect switch. Electrical workmanship shall be in accordance with Division 16. After installation and connection adjust and lubricate operators, hardware and controls to insure that doors function properly. Upon completion, doors shall be weathertight and shall be free from warp, twist, or distortion.

---END---

SECTION 08335. SECURITY GRILLE

1. APPLICABLE PUBLICATIONS: The following publications of the issues listed below, but referred to thereafter by basic designation only, form a part of this specification to the extent indicated by the references thereto:

1.1 Federal Specifications:

QQ-A-200/9C & Am 1	Aluminum Alloy Bar, Rod, Shapes, Tube and Wire, Extruded 6063.

1.2 American Society for Testing and Materials (ASTM) Publications:

A525-76	Steel Sheet, Zinc-coated (Galvanized) by the Hot-dip Process.

1.3 National Association of Architectural Metal Manufacturers (NAAMM) Publication:

Metal Finishes Manual (Finish Designation), August 1969.

2. QUALITY CONTROL: Approvals, except those required for field installation, field application and field tests, shall be obtained before delivery of materials to the project site.

3. SUBMITTALS:

3.1 Tests and Certificates: The testing requirements for materials incorporated in referenced documents will be waived provided the Contractor submits certificates from the manufacturer stating that materials furnished for this project conform to all requirements of this specification and the referenced documents. Material certificates shall be submitted to and approved by the Contracting Officer. Copies of other test reports need not be submitted except as specifically requested by the Contracting Officer.

3.1.1 Sample Certificate: The certificate shall not contain statements that could be interpreted to imply that the product does not meet all requirements specified, such as "as good as"; "achieve the same end use and results as materials formulated in accordance with the referenced specification"; "equal or exceed the service and performance of the specified material". The certificate should simply state that the product conforms to all requirements specified.

SAMPLE CERTIFICATE

The manufacturer hereby certifies that all following products being furnished for this project conform to all requirements of the project specifications and the respective reference specifications:

MANUFACTURER AND PRODUCT	REFERENCE SPECIFICATION
John Doe Company Galvanized Steel	ASTM A525

SIGNATURE AND TITLE

3.2 Shop Drawings: Shop drawings shall be submitted to and approved by the Contracting Officer before work is started. Drawings shall show types, sizes, locations, metal gages, hardware provisions, installation details, and other details of construction.

3.3 Samples: Two samples 12 inches long of aluminum with finish as specified shall be submitted to and approved by Contracting Officer before work is started.

3.4 Manufacturer's Installation Procedures: Submit current copies of manufacturer's recommended standard installation procedures for security grille before work is started.

4. DELIVERY AND STORAGE: Security grille shall be delivered to the job site wrapped in a protective covering, with the brands and names clearly marked thereon. Units shall be stored in dry locations with adequate ventilation, free from dust or water, and in such a manner as to permit easy access for inspection and handling. Units shall be handled with care to prevent damage to the faces, edges, and ends. Damaged items that cannot be restored to like-new condition shall be replaced at no additional cost to the Government.

5. SECURITY GRILLE: Security grille, shall be between jamb mounted with coil above ceiling and shall be manually operated.

5.1 Grille: Grille shall be composed of horizontal 5/16" diameter aluminum bars, fabricated of 6063 Alloy T5 aluminum, conforming to QQ-A-200/9, spaced 1-5/8" on centers joined by formed links at intervals of approximately 9 inches. Alternate bars shall be riveted to links. Links shall be hinged to provide a smooth operating flexible grille. End links shall be pressed metal arranged to act as abrading surface and to hold grille in guides. Bottom bar shall be fabricated from heavy aluminum "T" shape or aluminum structural angles. Bottom bar shall hang freely on grille to eliminate friction and binding in the guides.

5.2 Guides: Guides shall be extruded aluminum, fabricated of 6063 Alloy T5 aluminum, conforming to QQ-A-200/9, to form a slot of sufficient depth to retain grille in guides. Guides shall be provided with rigid vinyl inserts eliminating metal to metal contact. End links of grille slide in flange of guides, preventing the grille from being pulled out if deflected an excessive amount.

5.3 Hood: Hood shall be not less than 24 gauge galvanized steel, formed to fit contour of brackets and enclose the coiling grille. Hood shall be neatly formed and reinforced with beads or flanges to prevent deflection.

5.4 Counterbalance:

5.4.1 Spring Barrel: Spring barrel shall encase the counterbalance mechanism. Barrel shall be industrial steel tubing or pipe of thickness and diameter to carry the grille load and prevent deflection in excess of .03 inches per lineal foot of barrel.

5.4.2 Rings: Rings shall be constructed from malleable iron of involute shape and designed to coil the grille with a uniformly increasing diameter. Size shall provide initial diameter sufficient to insure proper counterbalance for all points of grille travel.

5.4.3 Counterbalance Springs: Counterbalance springs shall be oil-tempered, helical springs wound from especially heat-treated steel and mounted on a steel shaft. Springs shall be individually tailored and tested for this Project. All springs shall be anchored to the same tension rod and held in position by an accessible adjusting wheel.

5.4.4 Shaft: Shaft shall be constructed of cold rolled, polished steel of ample size to carry the torsional load of the spring counterbalance.

5.5 Barrel Plugs: Barrel plugs shall be heavy cast iron, designed to hold the ends of the spring and eliminate strain at the spring ends.

5.6 Adjustment Wheel: Adjustment wheel shall be heavy cast-iron and designed to increase or decrease the initial tension.

5.7 Bearings: Bearings shall be grease-sealed, precision ball bearings.

5.8 Gears: Gears shall be best grade gray iron, cast teeth machine-moulded from machine cut patterns.

5.9 Brackets: Brackets shall be high-test gray iron, and shall support the grille coil and spring barrel at either end.

5.10 Finish: Galvanized surfaces shall have a G90 coating class conforming to ASTM A525. All exposed aluminum surfaces shall have a AA-M10-C22-A42 color anodized finish in accordance with the requirements of NAAMM's "Metal Finishes Manual". Finish color shall be black. Finish shall match in appearance or fall within the two extremes of color range of the approved samples. All other door parts, except mechanisms, shall be primed with one shop coat of rust inhibiting primer. Mechanism shall be dipped in flat black paint.

5.11 Operation: Grille shall be manually operated by means of lift handles on bottom bar.

5.12 Locking: Grille shall be furnished with cylinder lock less cylinders. Masterkeyed cylinders shall be provided under section entitled "Finish Hardware".

6. INSTALLATION: Security grilles shall be installed by the manufacturer or his authorized representative, in accordance with approved shop drawings and manufacturer's directions. Upon completion, security grille shall be free from warp, twist, or distortion and shall be lubricated and properly adjusted to operate freely. After installation, all exposed surfaces shall be thoroughly cleaned, and all damaged work shall be restored to its original condition, or replaced with new work at no expense to the Government.

---END---

SECTION 08375. GLASS DOORS

1. APPLICABLE PUBLICATIONS: The following publications of the issues listed below, but referred to thereafter by basic designation only, form a part of this specification to the extent indicated by the references thereto:

1.1 Federal Specifications:

DD-G-1403B & Am 1	Glass, Plate (Float), Sheet, Figured, and Spandrel (Heat Strengthened and Fully Tempered).
QQ-A-200/9C & Am 1	Aluminum Alloy Bar, Rod, Shapes and Tube, and Wire Extruded 6063.
QQ-A-250/2D	Aluminum Alloy, 3003, Plate and Strip.
QQ-A-250/8E	Aluminum Alloy, 5052, Plate and Strip.
QQ-A-250/11E	Aluminum Alloy, 6061, Plate and Strip.
TT-P-38D & Am 1	Paint, Aluminum, Ready-Mixed.
TT-P-645	Primer, Paint, Zinc-Chromate, Alkyd Type.

1.2 Military Specifications:

MIL-C-18480A & Am 3	Coating Compound, Bituminous Solvent, Coal Tar Base.

1.3 American National Standards Institute (ANSI):

A156.4(1972)	Door Controls (Closers).

1.4 National Association of Architectural Metal Manufacturers (NAAMM):

Metal Finishes Manual (Finish Designation). (August 1969)

2. QUALITY CONTROL: Approvals, except those required for field installation, field application and field tests, shall be obtained before delivery of materials to the project site.

3. SUBMITTALS:

3.1 Materials Tests and Test Reports: The testing requirements for materials incorporated in referenced documents will be waived provided the manufacturer submits certificates stating that previously manufactured materials have been tested by recognized laboratories, that such materials meet testing requirements specified, and that the materials furnished for this project are of the same type, quality, manufacture and make as that tested. Material certificates shall be submitted to and approved by the Contracting Officer. Copies of other test reports need not be submitted except as specifically requested by the Contracting Officer.

3.2 Shop Drawings: Shop drawings for glass doors shall be submitted to and approved by the Contracting Officer before proceeding with fabrication.

Shop drawings shall indicate elevations of doors, full size sections, thickness and gages of metal, thickness and type of glass, hardware, details of installation and metal finish. Include a schedule showing location of units.

3.3 Samples: Two samples, 6-inches long, of top and bottom fitting showing construction and with finish as specified shall be submitted to and approved by the Contracting Officer before work is started.

3.4 Descriptive Literature: Manufacturer's descriptive literature shall be furnished with shop drawings and shall consist of detail specifications and instructions for installation, adjustments, cleaning and maintenance.

4. DELIVERY AND STORAGE:

4.1 Protective Coating or Covering: Prior to shipment from the factory, finished surfaces of aluminum and glass shall receive a protective coating or covering. Coating or covering shall not chip, peel, or flake due to temperature or weather and shall protect against discoloration and surface damage from transportation, storage, and construction activities. Coating or covering shall be readily removable without affecting the finish. Covering shall be either adhesive paper, waterproof tape or strippable plastic. Coating applied to aluminum shall be two sprayed-on coats or clear, water-white, nonyellowing, methacrylate lacquer to a total minimum thickness of 0.4 mil and maximum thickness of 0.6 mil.

4.2 Storage: Materials delivered to the site shall be inspected for damage, unloaded and stored with a minimum of handling. The storage spaces shall be in dry locations with adequate ventilation, free from dust, or water, and shall permit easy access for inspection and handling. Materials shall be stored on floors or platforms in a suitable and approved manner. Doors shall not be covered with tarps, polyethylene film, or similar type coverings, as trapped moisture can stain the metal.

5. GENERAL REQUIREMENTS:

5.1 General Description: Glass doors shall consist of tempered safety glass with extruded aluminum continuous top and bottom fittings of shape and size indicated. The doors shall include all required hardware, concealed anchors and attachments as detailed for a complete installation.

6. MATERIALS:

6.1 Aluminum: Aluminum shall consist of extruded shapes and sheet material. Extrusions shall comply with Specification QQ-A-200/9, alloy 6063-T5. Aluminum sheets and strips shall comply with Specification QQ-A-250/2, QQ-A-250/8 or QQ-A-250/11; alloy and temper best suited for the purpose. Screws, nuts, washers, rivets, and other miscellaneous fastening devices shall be of hard aluminum or stainless steel.

6.2 Glass: Glass shall be 1/2 inch thick, clear tempered safety glass conforming to DD-G-1403, Kind FT, Condition A, Type I, Class I.

6.3 Hardware: Door manufacturer shall supply all hardware required for glass doors as specified herein.

6.3.1 Floor Concealed Closers: ANSI A156.4, Type C06061 heavy duty with cover plate. Top pivot shall be of type required to function with manufacturers door and anchorage detail.

6.3.2 Push/Pulls: Extruded aluminum of the type detailed.

6.3.3 Locks: Doors, No. C106, C106B and C106E shall have manufacturer's standard dead lock, less cylinder, located in bottom fitting. Cylinders shall be provided under section entitled "Finish Hardware".

6.4 Aluminum Paint: TT-P-38.

6.5 Zinc Chromate Primer: TT-P-645.

6.6 Bituminous Paint: MIL-C-18480.

6.9 Finish on Aluminum Surfaces: Finish for aluminum surfaces shall be AA-M10-C22-A42 color anodized finish in accordance with the requirements of NAAMM's "Metal Finish Manual". Finish color shall be black. Finish shall match in appearance or fall within the two extremes of color range of approved samples.

7. INSTALLATION:

7.1 Glass Doors: Glass doors shall be set accurately in position, plumb, square and in alignment. Doors shall be securely anchored as indicated and in accordance with approved shop drawings and manufacturer's recommendations. After installation of doors, all hardware shall be adjusted to operate properly.

7.2 Protection of Aluminum from Dissimilar Materials:

7.2.1 Dissimilar Metals: Where aluminum surfaces come in contact with metals other than stainless steel, zinc, or white bronze, aluminum surfaces shall be insulated from direct contact with incompatible metals by one or a combination of the following methods:

(a) Painting the dissimilar metal with one coat of heavy-bodied bituminous paint.

(b) Applying a synthetic butyl rubber calking material between the aluminum and the dissimilar metal.

(c) Painting the dissimilar metal with a prime coat of zinc-chromate primer, or other suitable primer, followed by one coat of

aluminum paint or other suitable protective coating, excluding those containing lead pigmentation.

(d) Use of a nonabsorptive tape or gasket in permanently dry locations.

7.3 Cleaning: Upon completion of installation, metal and glass surfaces of doors shall be thoroughly cleaned, following the procedures recommended by the door manufacturer. Abrasive, caustic, or acid cleaning agents shall not be used.

7.4 Protection: During installation, doors shall be protected from damage. Doors and hardware that are damaged prior to completion and acceptance shall be restored to their original condition or new replacement shall be provided at no additional cost to the Government.

---END---

SECTION 08515. ALUMINUM WINDOW WALL SYSTEM

1. APPLICABLE PUBLICATIONS: The following publications of the issues listed below, but referred to thereafter by basic designation only, form a part of this specification to the extent indicated by the references thereto:

1.1 Federal Specifications:

QQ-A-200/9C & Am 1	Aluminum Alloy Bar, Rod, Shapes and Tube, and Wire Extruded 6063.
QQ-A-250/2D	Aluminum Alloy, 3003, Plate and Strip.
QQ-A-250/8E	Aluminum Alloy, 5052, Plate and Strip.
QQ-A-250/11E	Aluminum Alloy, 6061, Plate and Strip.
TT-P-38D & Am 1	Paint, Aluminum, Ready-mixed.
TT-P-645	Primer, Paint, Zinc-chromate, Alkyd Type.
LLL-B-810	Building Board, (Hardboard) Hard Pressed, Vegetable Fiber.

1.2 Military Specifications:

MIL-C-18480A & Am 3	Coating Compound, Bituminous Solvent, Coal Tar Base.

1.3 American Society for Testing and Materials (ASTM):

E283-73	Rate of Air Leakage Through Exterior Windows, Curtain Walls, and Doors.
E330-70	Structural Performance of Exterior Windows, Curtain Walls, and Doors Under the Influence of Wind Loads.
E331-70(1975)	Water Penetration of Exterior Windows, Curtain Walls, and Doors by Uniform Static Air Pressure Difference.

1.4 National Association of Architectural Metal Manufacturers (NAAMM):

Metal Finishes Manual (Finish Designation). (August 1969)

2. QUALITY CONTROL: Approvals, except those required for field installation, field application and field tests, shall be obtained before delivery of materials to the project site.

2.1 Design Criteria: Units shall be designed and anchored to withstand a wind load of 49 pounds per square foot.

3. SUBMITTALS:

3.1 Materials Tests and Test Reports: The testing requirements for materials incorporated in referenced documents will be waived provided the manufacturer submits certificates stating that previously manufactured materials have been tested by recognized laboratories, that such materials

meet testing requirements specified, and that the materials furnished for this project are of the same type, quality, manufacture and make as that tested. Material certificates shall be submitted to and approved by the Contracting Officer. Copies of other test reports need not be submitted except as specifically requested by the Contracting Officer.

3.2 Samples: Two full size corner samples of framing showing construction and with finish as specified shall be submitted to and approved by the Contracting Officer before work is started.

3.3 Shop Drawings: Shop drawings for window wall system shall be submitted to and approved by the Contracting Officer before proceeding with fabrication. Shop drawings shall indicate elevations of units, operating vents, structural gaskets, full-size sections, thickness and gages of metal, fastenings, details of operating vents, hardware and system finish. Include a schedule showing location of units. Design calculations shall be submitted.

3.4 Descriptive Literature: Manufacturer's descriptive literature shall be furnished with shop drawings and shall consist of detail specifications and instructions for installation, adjustments, cleaning and maintenance.

4. DELIVERY AND STORAGE:

4.1 Protective Coating or Covering: Prior to shipment from the factory, finished surfaces of aluminum shall receive a protective coating or covering. Coating or covering shall not chip, peel, or flake due to temperature or weather and shall protect against discoloration and surface damage from transportation, storage, and construction activities. Coating or covering shall be readily removable without affecting the finish. Covering shall be either adhesive paper, waterproof tape or strippable plastic. Coating applied to aluminum shall be two sprayed-on coats or clear, water-white, nonyellowing, methacrylate lacquer to a total minimum thickness of 0.4 mil and maximum thickness of 0.6 mil.

4.2 Storage: Materials delivered to the site shall be inspected for damage, unloaded and stored with a minimum of handling. The storage spaces shall be in dry locations with adequate ventilation, free from dust, or water, and shall permit easy access for inspection and handling. Materials shall be stored on floors or platforms in a suitable and approved manner. Units shall not be covered with tarps, polyethylene films, or similar type coverings, as trapped moisture can stain the metal.

5. GENERAL REQUIREMENTS:

5.1 General Description: Window wall system shall consist of mullions and framing members of shapes and sizes indicated. The window wall system shall include vertically pivoted vents, structural neoprene glazing gaskets, door frames, and hardboard panels occuring within the window wall system. All concealed auxiliary members, anchors, attachments and fastening devices for securing the window wall to the structure shall be provided.

5.2 Performance: All wall products furnished under this section shall meet or exceed the following performance requirements:

5.2.1 Resistance to Air Infiltration: Air infiltration shall not exceed 0.06 CFM/Sq. Ft. of wall area plus 0.5 CFM per foot of ventilator crack when tested at a pressure of 1.56 P.S.F. in accordance with ASTM E283.

5.2.2 Resistance to Water Infiltration: When tested in accordance with ASTM E331, the wall shall not leak at a minimum test pressure of 4.0 P.S.F.

5.2.3 Performance Under Uniform Load: When tested in accordance with ASTM E330, the maximum deflection of any member shall not exceed 1/175 of its span, and when the load is removed there shall be no evidence of permanent deformation or damage.

6. MATERIALS:

6.1 Aluminum for System Framing: Aluminum shall consist of extruded shapes and sheet material. Extrusions shall comply with Specification QQ-A-200/9, alloy 6063-T5. Aluminum sheets and strips shall comply with Specification QQ-A-250/2, QQ-A-250/8 or QQ-A-250/11; alloy and temper best suited for the purpose. Screws, nuts, washers, rivets, and other miscellaneous fastening devices shall be of hard aluminum or stainless steel.

6.2 Structural Glazing Gaskets: Structural neoprene gaskets shall have separate lock strips that are 10 points shore A harder in durometer than the gaskets to transmit extra pressure to the gasket sealing lips. Neoprene compound shall be formulated from the best available virgin materials, quality controlled to insure uniformity and compounded for optimum physical properties and function.

6.3 Glazing: Glass for glazing shall be as indicated and specified in section entitled "Glass and Glazing".

6.4 Vertically Pivoted Vents: Vents shall be tubular and corners shall be mitered and welded with reinforcing clips. Units shall be designed for one inch insulating glass units, 360 degree rotation and shall have snap-in glazing beads with no exposed fasteners. Weatherstripping shall be removable while window remains in position and shall be closed cell extruded neoprene.

6.4.1 Finish Hardware: Vents shall have two pivots with stainless steel pins. Pivots shall be designed so that vent is removable from frame without removing glass or glazing beads. Locks shall be concealed and shall be so designed that key can be removed when vent is in locked position.

6.5 Hardboard Panels: Hardboard shall conform to LLL-B-810, Type I, Surface 1, Finish B, Design a. Panels shall be of size and thickness indicated. Drill air relief holes at 24 inches on centers, both ways. Provide aluminum angles for anchorage as indicated.

6.6 Aluminum Paint: TT-P-38.

6.7 Zinc Chromate Primer: TT-P-645.

6.8 Bituminous Paint: MIL-C-18480.

6.9 Finish on Aluminum Surfaces: Finish for aluminum surfaces shall be AA-M10-C22-A42 color anodized finish in accordance with the requirements of NAAMM's "Metal Finishes Manual". Finish color shall be black. Finish shall match in appearance or fall within the two extremes of color range of approved samples.

7. FABRICATION:

7.1 Welding and Fastening: Where possible, locate welds on unexposed surfaces. Welds on exposed surfaces shall be dressed smooth. Welding rods, filler wire and flux shall be carefully selected to produce a uniform texture and color in finished work. Remove flux and spatter from surfaces immediately after welding. Exposed screws or bolts will be permitted only at inconspicuous locations, and shall have heads countersunk. Concealed reinforcements for hardware shall be welded in place as specified herein.

7.2 Fabrication of Aluminum Frames: Aluminum frames shall be fabricated of extruded aluminum shapes. Metal wall thickness for aluminum frame shall be as required to satisfy design requirements.

7.2.1 Framing: Framing may be tubular or split for expansion and project inside the plane of the glass. Framing shall accommodate gasket sections as indicated. There shall be no through metal in horizontal rails or vertical mullions.

7.2.2 Glazing: System shall accommodate one inch insulating glass.

7.2.3 Neoprene Gaskets: Neoprene gaskets with separate zip-lock strips shall be used to join aluminum framing, vents and glass. Structural aluminum members shall be designed to support windloads as hereinbefore specified. Gaskets shall be installed under compression according to dimensions recommended by the manufacturer and shall be sealed at all joints. All joints shall be flush. Zip-lock strips shall have weeps as recommended by system manufacturer.

7.2.4 Internal Drainage: Internal drainage shall lead any infiltrated water to the exterior through one inch long weep slots in the extruded aluminum sill.

7.2.5 Expansion and Contraction: The system shall provide for expansion and contraction of the component materials as will be required by an ambient temperature range of 120 degrees F. without causing harmful buckling, or

cracking, opening of joints, undue stress on fasteners, or other effects detrimental to weathering performance.

7.3 Pivoted Vents: Pivoted vent main frame and vent thermal breaks shall be die roll pressed into the dovetail grooves of separate aluminum extrusions. Joined members shall form an integral pressure bonded unit without use of screws, straps, pins or other thermal bridging elements. Vents shall be set into wall system as indicated.

8. INSTALLATION:

8.1 Window Wall System: Window wall system shall be set accurately in position, plumb, square, level and in alignment. Units shall be securely anchored in accordance with design criteria specified herein and installed in accordance with approved shop drawings and manufacturer's recommendations.

8.2 Protection of Aluminum from Dissimilar Materials:

8.2.1 Dissimilar Metals: Where aluminum surfaces come in contact with metals other than stainless steel, zinc, or white bronze, aluminum surfaces shall be insulated from direct contact with incompatible metals by one or a combination of the following methods:

(a) Painting the dissimilar metal with one coat of heavy-bodied bituminous paint.

(b) Applying a synthetic butyl rubber calking material between the aluminum and the dissimilar metal.

(c) Painting the dissimilar metal with a prime coat of zinc-chromate primer, or other suitable primer, followed by one coat of aluminum paint or other suitable protective coating, excluding those containing lead pigmentation.

(d) Use of a nonabsorptive tape or gasket in permanently dry locations.

8.2.2 Drainage from Dissimilar Metals: Dissimilar metals used in locations where drainage from them passes over aluminum shall be painted as specified above, to prevent staining of aluminum.

8.2.3 Masonry and Concrete: Aluminum surfaces in contact with mortar, concrete, or other masonry materials shall be given one coat of heavy-bodied bituminous paint.

8.2.4 Wood: Aluminum surfaces in contact with wood or other similarly absorptive materials, which may become repeatedly wet, and aluminum surfaces in contact with treated wood, shall be given two coats of the aluminum paint or one coat of heavy-bodied bituminous paint. In lieu of painting the aluminum, the Contractor shall have the option of painting the wood and other

absorptive surfaces with two coats of aluminum paint, and sealing the joints with calking compound.

8.3 Cleaning: Upon completion of installation, metal surfaces of units shall be thoroughly cleaned, following the procedure recommended by the systems manufacturer. Abrasive, caustic, or acid cleaning agents shall not be used.

8.4 Protection: During installation, units shall be protected from damage. Units and components that are damaged prior to completion and acceptance shall be restored to their original condition or new replacements shall be provided at no additional cost to the Government.

---END---

SECTION 08516. ALUMINUM DISPATCH WINDOW

1. APPLICABLE PUBLICATIONS: The following publications of the issues listed below, but referred to thereafter by basic designation only, form a part of this specification to the extent indicated by the references thereto:

1.1 Federal Specifications:

QQ-A-200/9C & Am 1	Aluminum Alloy Bar, Rod, Shapes and Tube, and Wire Extruded 6063.
QQ-A-250/2D	Aluminum Alloy, 3003, Plate and Strip.
QQ-A-250/8E	Aluminum Alloy, 5052, Plate and Strip.
QQ-A-250/11E	Aluminum Alloy, 6061, Plate and Strip.
TT-P-38D & Am 1	Paint, Aluminum, Ready-mixed.
TT-P-645	Primer, Paint, Zinc-chromate, Alkyd Type.

1.2 Military Specifications:

MIL-C-18480A & Am 3	Coating Compound, Bituminous Solvent, Coal Tar Base.

1.3 American Society for Testing and Materials (ASTM):

E283-73	Rate of Air Leakage Through Exterior Windows, Curtain Walls, and Doors.
E330-70	Structural Performance of Exterior Windows, Curtain Walls, and Doors Under the Influence of Wind Loads.
E331-70(1975)	Water Penetration of Exterior Windows, Curtain Walls, and Doors by Uniform Static Air Pressure Difference.

1.4 National Association of Architectural Metal Manufacturers (NAAMM):

Metal Finishes Manual (Finish Designation). (August 1969)

2. QUALITY CONTROL: Approvals, except those required for field installation, field application and field tests, shall be obtained before delivery of materials to the project site.

2.1 Design Criteria: Units shall be designed and anchored to withstand a wind load of 49 pounds per square foot.

3. SUBMITTALS:

3.1 Materials Tests and Test Reports: The testing requirements for materials incorporated in referenced documents will be waived provided the manufacturer submits certificates stating that previously manufactured materials have been tested by recognized laboratories, that such materials meet testing requirements specified, and that the materials furnished for this

project are of the same type, quality, manufacture and make as that tested. Material certificates shall be submitted to and approved by the Contracting Officer. Copies of other test reports need not be submitted except as specifically requested by the Contracting Officer.

3.2 Shop Drawings: Shop drawings for dispatch window shall be submitted to and approved by the Contracting Officer before proceeding with fabrication. Shop drawings shall indicate elevations of unit, rolling vent, full-size sections, thickness and gages of metal, fastenings, details of hardware and unit finish. Design calculations shall be submitted.

3.3 Samples: Two full size corner samples of frames showing construction and with finish as specified shall be submitted to and approved by the Contracting Officer before work is started.

3.4 Descriptive Literature: Manufacturer's descriptive literature shall be furnished with shop drawings and shall consist of detail specifications and instructions for installation, adjustments, cleaning and maintenance.

4. DELIVERY AND STORAGE:

4.1 Protective Coating or Covering: Prior to shipment from the factory, finished surfaces of aluminum shall receive a protective coating or covering. Coating or covering shall not chip, peel, or flake due to temperature or weather and shall protect against discoloration and surface damage from transportation, storage, and construction activities. Coating or covering shall be readily removable without affecting the finish. Covering shall be either adhesive paper, waterproof tape or strippable plastic. Coating applied to aluminum shall be two sprayed-on coats or clear, water-white, nonyellowing, methacrylate lacquer to a total minimum thickness of 0.4 mil and maximum thickness of 0.6 mil.

4.2 Storage: Materials delivered to the site shall be inspected for damage, unloaded and stored with a minimum of handling. The storage spaces shall be in dry locations with adequate ventilation, free from dust, or water, and shall permit easy access for inspection and handling. Materials shall be stored on floors or platforms in a suitable and approved manner. Unit shall not be covered with tarps, polyethylene film, or similar type coverings, as trapped moisture can stain the metal.

5. GENERAL REQUIREMENTS:

5.1 General Description: Aluminum dispatch window shall be a complete framed unit with rolling insulated vents. The unit shall include factory glazed vents, weatherstripping and all operating hardware with key lock.

5.2 Performance: Dispatch window furnished under this section shall meet or exceed the following performance requirements:

5.2.1 Resistance to Air Infiltration: Air infiltration shall not exceed 0.06 CFM/Sq. Ft. of wall area plus 0.5 CFM per foot of ventilator crack when tested at a pressure of 1.56 P.S.F. in accordance with ASTM E283.

5.2.2 Resistance to Water Infiltration: When tested in accordance with ASTM E331, the wall shall not leak at a minimum test pressure of 4.0 P.S.F.

5.2.3 Performance Under Uniform Load: When tested in accordance with ASTM E330, the maximum deflection of any member shall not exceed 1/175 of its span, and when the load is removed there shall be no evidence of permanent deformation or damage.

6. MATERIALS:

6.1 Aluminum for Framing: Aluminum shall consist of extruded shapes and sheet material. Extrusions shall comply with Specification QQ-A-200/9, alloy 6063-T5. Aluminum sheets and strips shall comply with Specification QQ-A-250/2, QQ-A-250/8 or QQ-A-250/11; alloy and temper best suited for the purpose. Screws, nuts, washers, rivets, and other miscellaneous fastening devices shall be of hard aluminum or stainless steel.

6.2 Rolling Vents: Rolling vents shall be factory glazed with insulated units as specified in section entitled "Glass and Glazing". Vents shall interlock at center stile and shall have a key type lock.

6.3 Aluminum Paint: TT-P-38.

6.4 Zinc Chromate Primer: TT-P-645.

6.5 Bituminous Paint: MIL-C-18480.

6.6 Finish on Aluminum Surfaces: Finish for aluminum surfaces shall be AA-M10-C22-A42 color anodized finish in accordance with the requirements of NAAMM's "Metal Finishes Manual". Finish color shall be black. Finish shall match in appearance or fall within the two extremes of color range of approved samples.

7. FABRICATION:

7.1 Welding and Fastening: Where possible, locate welds on unexposed surfaces. Welds on exposed surfaces shall be dressed smooth. Welding rods, filler wire and flux shall be carefully selected to produce a uniform texture and color in finished work. Remove flux and spatter from surfaces immediately after welding. Exposed screws or bolts will be permitted only at inconspicuous locations, and shall have heads countersunk. Concealed reinforcements for hardware shall be welded in place as specified herein.

7.2 Fabrication of Aluminum Frames: Aluminum frames shall be fabricated of extruded aluminum shapes. Metal wall thickness for aluminum frame shall be as required to satisfy design requirements.

7.3 Internal Drainage: Internal drainage shall lead any infiltrated water to the exterior through one inch long weep slots in the extruded aluminum sill.

7.4 Expansion and Contraction: The system shall provide for expansion and contraction of the component materials as will be required by an ambient temperature range of 120 degree F. without causing harmful buckling, or cracking, opening of joints, undue stress on fasteners, or other effects detrimental to weathering performance.

8. INSTALLATION:

8.1 Dispatch Window: Dispatch window shall be set accurately in position, plumb, square, level and in alignment. Unit shall be securely anchored in accordance with the design criteria specified herein and installed in accordance with approved shop drawings and manufacturer's recommendations.

8.2 Protection of Aluminum from Dissimilar Materials:

8.2.1 Dissimilar Metals: Where aluminum surfaces come in contact with metals other than stainless steel, zinc, or white bronze, aluminum surfaces shall be insulated from direct contact with incompatible metals by one or a combination of the following methods:

(a) Painting the dissimilar metal with one coat of heavy-bodied bituminous paint.

(b) Applying a synthetic butyl rubber calking material between the aluminum and the dissimilar metal.

(c) Painting the dissimilar metal with a prime coat of zinc-chromate primer, or other suitable primer, followed by one coat of aluminum paint or other suitable protective coating, excluding those containing lead pigmentation.

(d) Use of a nonabsorptive tape or gasket in permanently dry locations.

8.2.2 Drainage from Dissimilar Metals: Dissimilar metals used in locations where drainage from them passes over aluminum shall be painted as specified above, to prevent staining of aluminum.

8.2.3 Masonry and Concrete: Aluminum surfaces in contact with mortar, concrete, or other masonry materials shall be given one coat of heavy-bodied bituminous paint.

8.2.4 Wood: Aluminum surfaces in contact with wood or other similarly absorptive materials, which may become repeatedly wet, and aluminum surfaces in contact with treated wood, shall be given two coats of the aluminum paint

or one coat of heavy-bodied bituminous paint. In lieu of painting the aluminum, the Contractor shall have the option of painting the wood and other absorptive surfaces with two coats of aluminum paint, and sealing the joints with calking compound.

8.3 Cleaning: Upon completion of installation, metal surfaces of unit shall be thoroughly cleaned, following the procedure recommended by the unit manufacturer. Abrasive, caustic, or acid cleaning agents shall not be used.

8.4 Protection: During installation, unit shall be protected from damage. Components that are damaged prior to completion and acceptance shall be restored to their original condition or new replacements shall be provided at no additional cost to the Government.

---END---

SECTION 08517. INTERIOR INSULATED WINDOWS WITH BLINDS

1. APPLICABLE PUBLICATIONS: The following publications of the issues listed below, but referred to thereafter by basic designation only, form a part of this specification to the extent indicated by the references thereto:

1.1 Federal Specifications:

DD-G-451D	Glass, Float or Plate, Sheet, Figured (Flat, for Glazing, Mirrors and Other Uses).
QQ-A-200/9C & Am 1	Aluminum Alloy Bar, Rod, Shapes and Tube, and Wire Extruded 6063.
QQ-A-250/2D	Aluminum Alloy, 3003, Plate and Strip.
QQ-A-250/8E	Aluminum Alloy, 5052, Plate and Strip.
QQ-A-250/11E	Aluminum Alloy, 6061, Plate and Strip.
TT-P-38D & Am 1	Paint, Aluminum, Ready-Mixed.
TT-P-645	Primer, Paint, Zinc-chromate, Alkyd Type.

1.2 Military Specifications:

MIL-C-18480A & Am 3	Coating Compound, Bituminous Solvent, Coal Tar Base.

1.3 American National Standards Institute, Inc. (ANSI) Publication:

Z97.1-1972	Performance Specifications and Methods of Test for Transparent Safety Glazing Material Used in Buildings.

1.4 National Association of Architectural Metal Manufacturers (NAAMM):

Metal Finishes Manual (Finish Designation). (August 1969)

1.5 National Fire Protection Association (NFPA) Standard:

No. 80-1975	Fire Doors and Windows.

2. QUALITY CONTROL: Approvals, except those required for field installation, field application and field tests, shall be obtained before delivery of materials to the project site.

3. SUBMITTALS:

3.1 Materials Tests and Test Reports: The testing requirements for materials incorporated in referenced documents will be waived provided the manufacturer submits certificates stating that previously manufactured materials have been tested by recognized laboratories, that such materials meet testing requirements specified, and that the materials furnished for this project are of the same type, quality, manufacture and make as that tested.

Material certificates shall be submitted to and approved. Copies of other test reports need not be submitted except as specifically requested by the Contracting Officer.

3.2 Shop Drawings: Shop drawings for interior insulated windows with integral venetian blinds shall be submitted to and approved by the Contracting Officer before proceeding with fabrication. Shop drawings shall indicate elevations of units, full-size sections, thickness and gages of metal, fastenings, method of installation, method of glazing, details of blinds, location of blind operating hardware, and unit finish. Include a schedule showing location of units.

3.3 Samples: Two full size corner samples of framing showing construction and with finish as specified and two 12 inch by 12 inch samples of glass shall be submitted to and approved by the Contracting Officer before work is started.

3.4 Descriptive Literature: Manufacturer's descriptive literature shall be furnished with shop drawings and shall consist of detail specifications and instructions for installation, adjustments, cleaning and maintenance.

4. DELIVERY AND STORAGE:

4.1 Protective Coating or Covering: Prior to shipment from the factory, finished surfaces of aluminum shall receive a protective coating or covering. Coating or covering shall not chip, peel, or flake due to temperature or weather and shall protect against discoloration and surface damage from transportation, storage, and construction activities. Coating or covering shall be readily removable without affecting the finish. Covering shall be either adhesive paper, waterproof tape or strippable plastic. Coating applied to aluminum shall be two sprayed-on coats or clear, water-white, nonyellowing, methacrylate lacquer to a total minimum thickness of 0.4 mil and maximum thickness of 0.6 mil.

4.2 Storage: Materials delivered to the site shall be inspected for damage, unloaded and stored with a minimum of handling. The storage spaces shall be in dry locations with adequate ventilation, free from dust, or water, and shall permit easy access for inspection and handling. Materials shall be stored on floors or platforms in a suitable and approved manner. Window units shall not be covered with tarps, polyethylene films, or similar type coverings, as trapped moisture can stain the metal.

5. GENERAL REQUIREMENTS:

5.1 General Description: Interior insulated windows with integral venetian blinds shall be made up of aluminum frame, two glazed sections and venetian blinds located between glazing. Units shall be of size and design indicated and modified to fit into pressed metal frames. Unit shall provide a sound transmission class of 40.

6. MATERIALS:

6.1 Aluminum for Window Framing: Aluminum shall consist of extruded shapes and sheet material. Extrusions shall comply with Specification QQ-A-200/9, alloy 6063-T5. Aluminum sheets and strips shall comply with Specification QQ-A-250/2, QQ-A-250/8 or QQ-A-250/11; alloy and temper best suited for the purpose. Screws, nuts, washers, rivets, and other miscellaneous fastening devices shall be of hard aluminum or stainless steel.

6.2 Glazing: Interior fixed panel and exterior hinged panel shall be glazed with 1/4 inch thick clear wire glass. Wire glass shall be Type II, Class I, Form 1, Quality q8, Mesh m2 conforming to DD-G-451. Wire glass shall meet the impact test requirements of ANSI Z97.1, and shall conform to NFPA No. 80. Units shall be factory glazed in a "U" shaped neoprene compression gasket.

6.3 Aluminum Paint: TT-P-38.

6.4 Zinc Chromate Primer: TT-P-645.

6.5 Bituminous Paint: MIL-C-18480.

6.6 Finish on Aluminum Surfaces: Finish for aluminum surfaces shall be AA-M10-C22-A42 color anodized finish in accordance with the requirements of NAAMM's "Metal Finishes Manual". Finish color shall be black. Finish shall match in appearance or fall within the two extremes of color range of approved samples.

7. FABRICATION:

7.1 Welding and Fastening: Where possible, locate welds on unexposed surfaces. Welds on exposed surfaces shall be dressed smooth. Welding rods, filler wire and flux shall be carefully selected to produce a uniform texture and color in finished work. Remove flux and spatter from surfaces immediately after welding. Exposed screws or bolts will be permitted only at inconspicuous locations, and shall have heads countersunk. Concealed reinforcements for hardware shall be welded in place as specified herein.

7.2 Fabrication of Aluminum Frames: Aluminum frames shall be fabricated of extruded aluminum shapes. Minimum metal wall thickness for aluminum frames shall be .100 inch. Frame and vent shall be a minimum of 3 inches deep. Sill and jamb members shall be one piece, continuous precision formed with inside radius of not more than 1-1/4 inch or welded to develop the full strength of section. Vent head shall provide full concealment of venetian blind in retracted position.

7.3 Vents: Vents shall consist of two glazed sections, easily separated and held apart in a stable open position by stainless steel stay arms to permit cleaning of all glass surfaces and for accessibilty to enclosed venetian blinds. The hinged cleaning or access vent shall be located and

mounted on the exterior or corridor side of the window with concealed hinges. Interior or room side vent shall be a fixed and sealed section to prevent infiltration of room side air.

7.4 Venetian Blind: Slats shall be tempered aluminum, 1-3/8 inch wide with a minimum of ten slats per foot. Finish of slats shall be clear anodized. Blinds shall be mounted in vent head and shall be removable without tools when vent is in the open maintenance position. Operation of blind (tilting, raising and lowering) shall be by single gear operated control.

7.5 Lock Hardware: Locking hardware for hinged vent shall be flush, non-protruding cam type with removable key for custodial operation.

8. INSTALLATION:

8.1 Window Units: Window units shall be set accurately in position, plumb, square, level and in alignment. Units shall be securely anchored in pressed metal frames as indicated and in accordance with approved shop drawings.

8.2 Protection of Aluminum from Dissimilar Materials:

8.2.1 Dissimilar Metals: Where aluminum surfaces come in contact with metals other than stainless steel, zinc, or white bronze, aluminum surfaces shall be insulated from direct contact with incompatible metals by one or a combination of the following methods:

(a) Painting the dissimilar metal with one coat of heavy-bodied bituminous paint.

(b) Applying a synthetic butyl rubber calking material between the aluminum and the dissimilar metal.

(c) Painting the dissimilar metal with a prime coat of zinc-chromate primer, or other suitable primer, followed by one coat of aluminum paint or other suitable protective coating, excluding those containing lead pigmentation.

(d) Use of a nonabsorptive tape or gasket in permanently dry locations.

8.3 Cleaning: Upon completion of installation, units shall be thoroughly cleaned, following the procedures recommended by the unit manufacturer. Abrasive, caustic, or acid cleaning agents shall not be used.

8.4 Protection: During installation, frames and glazing shall be protected from damage. Frames and glazing that are damaged prior to completion and acceptance shall be restored to their original condition or new replacements shall be provided at no additional cost to the Government.

---END---

SECTION 08535. ROLL-UP PASS WINDOWS AND COUNTER SHUTTERS

1. APPLICABLE PUBLICATIONS: The following publications of the issues listed below, but referred to thereafter by basic designation only, form a part of this specification to the extent indicated by the references thereto:

1.1 American Society for Testing and Materials (ASTM) Publications:

A480-75 Flat-rolled Stainless and Heat-resisting Steel Plate, Sheet, and Strip.

2. QUALITY CONTROL: Approvals, except those required for field installation, field application and field tests, shall be obtained before delivery of materials to the project site.

3. SUBMITTALS:

3.1 Tests and Certificates: The testing requirements for materials incorporated in referenced documents will be waived provided the Contractor submits certificates from the manufacturer stating that materials furnished for this project conform to all requirements of this specification and the referenced documents. Material certificates shall be submitted to and approved by the Contracting Officer. Copies of other test reports need not be submitted except as specifically requested by the Contracting Officer.

3.1.1 Sample Certificate: The certificate shall not contain statements that could be interpreted to imply that the product does not meet all requirements specified, such as "as good as"; "achieve the same end use and results as materials formulated in accordance with the referenced specification"; "equal or exceed the service and performance of the specified material". The certificate should simply state that the product conforms to all requirements specified.

SAMPLE CERTIFICATE

The manufacturer hereby certifies that all following products being furnished for this project conform to all requirements of the project specifications and the respective reference specifications:

MANUFACTURER AND PRODUCT	REFERENCE SPECIFICATION
John Doe Company Stainless Steel	ASTM A480

SIGNATURE AND TITLE

3.2 Shop Drawings: Shop drawings shall be submitted to and approved by the Contracting Officer before work is started. Drawings shall show types, sizes, locations, metal gages, hardware provisions, installation details, magnetic contacts, and other details of construction.

3.3 Samples: One sample 12 inches long of material with finish as specified shall be submitted to and approved by the Contracting Officer before work is started.

3.4 Manufacturer's Installation Procedures: Submit current copies of manufacturer's recommended standard installation procedures for roll-up pass windows and counter shutters before work is started.

4. DELIVERY AND STORAGE: Roll-up pass windows and counter shutters shall be delivered to the job site wrapped in a protective covering, with the brands and names clearly marked thereon. Units shall be stored in dry locations with adequate ventilation, free from dust or water, and in such a manner as to permit easy access for inspection and handling. Units shall be handled with care to prevent damage to the faces, edges, and ends. Damaged items that cannot be restored to like-new condition shall be replaced at no additional cost to the Government.

5. ROLL-UP PASS WINDOWS: Roll-up pass windows shall be a completely assembled unit, and shall consist of a stainless steel rolling window assembly and a stainless steel frame and sill. The rolling window shall consist of interlocking, flat-faced 22 gage stainless steel slats fitted with endlocks to hold curtain in alignment. Bottom of curtain shall be fitted with a stainless steel bottom bar provided with a lift handle and a slide lock bolt at either end of window; and a continuous vinyl bumper to seal against the counter top. Curtain shall be coiled around a barrel which rotates on self-lubricating bearings and containing helical, oil-tempered counterbalance spring. Barrel shall be mounted as part of the complete assembly directly beneath the stainless steel head. A stainless steel hood and facia shall be provided to enclose mechanism and end brackets. Stainless steel frame, to suit wall thickness, shall be provided, consisting of 16 gage jambs and head, hood and facia, and 14 gage sill. Grooves shall be formed into sides of frame for retaining curtain. All stainless steel shall have a No. 4 Finish in accordance with ASTM A480.

6. ROLL-UP COUNTER SHUTTERS:

6.1 Rated: Rated roll-up counter shutters shall bear the required label of the Underwriters' Laboratories. Rated roll-up counter shutters shall be located as indicated with all required fittings and hardware. Rated counter shutters shall be automatic closing in event of fire. Curtains shall be composed of flat slats rolled of minimum 22 gage stainless steel designed to interlock for smooth coiling operation and be approximately 1-1/2 inch wide when assembled in the curtain. Each slat shall be fitted with end locks at both ends. Shutters shall be push-up operated by means of handles mounted in the bottom bar. Automatic closing shall be thermally controlled by means of a fusible link mounted as indicated. Curtain guides shall be box-type, assembled of stainless steel angles and channels, and recessed into jambs as indicated. Bottom bar shall have slide bolt type locks at either end. All stainless steel shall have a No. 4 Finish in accordance with ASTM A480.

6.2 Non-Rated: Non-rated roll-up counter shutters shall be located as indicated with all required fittings and hardware. Curtain shall be composed of a flat slat of 22 gage stainless steel designed to interlock for smooth, coiling operation and shall be approximately 1-1/2 inches wide when assembled in the curtain. Alternate slats shall be fitted with endlocks to hold curtain in alignment. Bottom of curtain shall be finished with suitable angle fitted with lift handle, and a vinyl bumper to prevent abrasion on the counter. Curtain shall be locked at each end of bottom bar by a slide bolt, with padlock keeper, which shall engage a locking wedge in each guide. Curtain shall be coiled around a steel pipe fitted, when required, with involute shaped rings for ease of operation. Rings shall be faced with suitable material to prevent curtain abrasion. Barrel shall be of sufficient thickness and diameter to prevent deflection exceeding .03 inches per foot. Barrel shall be supported by plate brackets. Helical, oil-tempered springs shall be installed inside the steel pipe, which shall rotate on self-lubricating bearings. Spring tension shall be adjusted in the field by means of an adjusting wheel. Guides shall be stainless steel shapes recessed flush with face of wall as indicated. Continuous strips of heavy nap stripping shall be locked into guides to eliminate metal-to-metal contact and to provide dust-seal around curtain. Curtain shall be operated by means of lift handles or bottom bar. A 24 US gage aluminum hood shall be provided. All stainless steel shall have a No. 4 Finish in accordance with ASTM A480. Exposed surfaces of aluminum hood shall be finished to match stainless steel finish.

6.3 Magnetic Contacts: Provide magnetic contacts for each roll-up counter shutter located in Area No. N004. Magnetic contacts shall meet or exceed the following:

(a) Contain single pole double throw contacts in dust tight enclosure.

(b) Approximate Dimension: 2-1/2 inches long by 1/2 inch wide by 9/16 inch high.

(c) Provide the necessary spacers to insulate magnet from steel.

(d) Color: White.

(e) Circuit Connection: Connect cabling from contacts to area Field Interface Device (FID) terminal cabinets.

7. INSTALLATION: Roll-up pass windows and counter shutters shall be installed by the manufacturer or his authorized representative, in accordance with approved shop drawings and manufacturer's directions. Upon completion, roll-up pass windows and counter shutters shall be free from warp, twist, or distortion and shall be lubricated and properly adjusted to operate freely.

After installation, all exposed surfaces shall be thoroughly cleaned, and all damaged work shall be restored to its original condition, or replaced with new work at no expense to the Government.

---END---

SECTION 08537. SLIDING PASS WINDOWS

1. APPLICABLE PUBLICATIONS: The following publications of the issues listed below, but referred to thereafter by basic designation only, form a part of this specification to the extent indicated by the references thereto:

1.1 Federal Specifications:

DD-G-451D Glass, Float or Plate, Sheet, Figured (Flat, For Glazing, Mirrors and Other Uses).

1.2 American Society for Testing and Materials (ASTM) Publications:

B221-76a Aluminum-alloy Extruded Bars, Rods, Wire, Shapes, and Tubes.

1.3 National Association of Architectural Metal Manufacturer's (NAAMM) Publication:

Metal Finishes Manual (Finish Designation), August 1969.

2. QUALITY CONTROL: Approvals, except those required for field installation, field application and field tests, shall be obtained before delivery of materials to the project site.

3. SUBMITTALS:

3.1 Tests and Certificates: The testing requirements for materials incorporated in referenced documents will be waived provided the Contractor submits certificates from the manufacturer stating that materials furnished for this project conform to all requirements of this specification and the referenced documents. Material certificates shall be submitted to and approved by the Contracting Officer. Copies of other test reports need not be submitted except as specifically requested by the Contracting Officer.

3.1.1 Sample Certificate: The certificate shall not contain statements that could be interpreted to imply that the product does not meet all requirements specified, such as "as good as"; "achieve the same end use and results as materials formulated in accordance with the referenced specification"; "equal or exceed the service and performance of the specified material". The certificate should simply state that the product conforms to all requirements specified.

SAMPLE CERTIFICATE

The manufacturer hereby certifies that all following products being furnished for this project conform to all requirements of the project specifications and the respective reference specifications:

MANUFACTURER AND PRODUCT

John Doe Company

REFERENCE SPECIFICATION

ASTM A480

SIGNATURE AND TITLE

3.2 Shop Drawings: Shop drawings shall be submitted to and approved by the Contracting Officer before work is started. Drawings shall show types, sizes, locations, metal gages, hardware provisions, installation details, and other details of construction.

3.3 Samples: Two samples 12 inches long of aluminum with finish as specified shall be submitted to and approved by the Contracting Officer before work is started.

3.4 Manufacturer's Installation Procedures: Submit current copies of manufacturer's recommended standard installation procedures for sliding pass windows before work is started.

4. DELIVERY AND STORAGE: Sliding windows shall be delivered to the job site wrapped in a protective covering, with the brands and names clearly marked thereon. Units shall be stored in dry locations with adequate ventilation, free from dust or water, and in such a manner as to permit easy access for inspection and handling. Units shall be handled with care to prevent damage to the faces, edges, and ends. Damaged items that cannot be restored to like-new condition shall be replaced at no additional cost to the Government.

5. SLIDING PASS WINDOW: Sliding pass window assembly shall consist of frame and sliding serving windows. Sliding panels shall be as indicated.

5.1 Frames and Glass Channels: Extruded 6063-T5 aluminum alloy conforming to ASTM B221. The bottom channel of sliding panel shall be fitted with a wool pile seal for counter contact. Frame shall be 5/8 inch high by 1-3/8 inches deep. Sliding panel shall be hung on nylon track.

5.2 Glass: 1/4 inch thick, opaque wire glass conforming to Federal Specification DD-G-451, Type II, Class 1, Form 2, Quality q8, Finish f1, Mesh m2, Pattern p3, and 1/4 inch thick clear wire glass conforming to Federal Specification DD-G-451, Type II, Class 1, Form 1, Quality q8, Mesh m2. Glazing shall be composition cork strip.

5.3 Lock: Manufacturer's standard, key type lock. Provide four keys per lock.

5.4 Finish: Exposed aluminum surfaces shall have a AA-M10-C22-A41 clear anodized finish in accordance with the requirements of NAAMM's "Metal Finishes Manual". Finish shall match in appearance or fall within the two extremes of color range of the approved samples.

6. INSTALLATION: Sliding pass windows shall be installed by the manufacturer or his authorized representative, in accordance with approved shop drawings and manufacturer's directions. Upon completion, sliding pass windows shall be free from warp, twist, or distortion and shall be lubricated and properly adjusted to operate freely. After installation, all exposed surfaces shall be thoroughly cleaned, and all damaged work shall be restored to its original condition, or replaced with new work at no expense to the Government.

---END---

SECTION 08710. FINISH HARDWARE

1. APPLICABLE PUBLICATIONS: The following publications of the issues listed below, but referred to elsewhere by basic designation only, form a part of this specification to the extent indicated by the references thereto:

1.1 American National Standards Institute (ANSI):

A156.1-1970	Butts and Hinges (BHMA 101).
A156.2-1975	Locks and Lock Trim (BHMA 601).
A156.3-1972	Exit Devices (BHMA 701).
A156.4-1972	Door Controls (Closers) (BHMA 301).
A156.6-1972	Architectural Door Trim (BHMA 1001).
A156.7-1972	Template Hinge Dimensions (BHMA 111).
A156.8-1974	Door Controls (Overhead Holders) (BHMA 311).
A156.9-1975	Cabinet Hardware (BHMA 201).

1.2 Builder's Hardware Manufacturers Association (BHMA) Standards:

501, Jun 1974	Auxiliary Locks.
1101, Jan 1970	Spring Hinges.
1201, Sep 1970	Auxiliary Hardware.
1301, Dec 1973	Materials and Finishes.

1.3 National Fire Protection Association (NFPA):

80	Standard for Fire Doors and Windows (Current Edition).
101	Life Safety Code (Current Edition).

1.4 Underwriter's Fire Protection Association (UL):

Building Materials Directory (Current Edition).
Accident, Automotive, and Burglary Protection Equipment Lists (Current Edition).

2. QUALITY CONTROL: Approvals, except those required for field installations, field applications and field tests, shall be obtained before delivery of material to the project site.

3. SUBMITTALS:

3.1 Hardware List: As soon as practicable after award of contract and before any builders' hardware is delivered to the job site, the Contractor shall submit, for approval, a listing of each item of finish hardware to the Contracting Officer. The list shall be submitted in the following form:

Item No.	Hardware Item	Reference Publication Type No.	Mfrs. Name and Catalog No.	UL Mark (if Fire-Rated)	BHMA Finish Designation
1					
2					

3.2 Test and Certificates: The testing requirements for materials incorporated in referenced documents will be waived provided the Contractor submits certificates from the manufacturer stating that materials furnished for this project conform to all requirements of this specification and the referenced documents. Material certificates shall be submitted to and approved by the Contracting Officer. Copies of other test reports need not be submitted except as specifically requested by the Contracting Officer.

3.3 Hardware Schedule: After approval of the hardware list and certificates, and before hardware is delivered to the job site, a hardware schedule shall be submitted to and approved by the Contracting Officer. The schedule shall include for each item the quantity, manufacturer's catalog number and corresponding reference publication type number, descriptive data, location, hardware set number, key control symbols, UL Mark (if fire-rated and listed) and list of abbreviations.

3.4 Keying System Submission: Before locks are delivered to the job site, a complete keying system shall be submitted to and approved by the Contracting Officer.

3.5 Shop Drawings are not required for standard commercial items of builders' hardware. Shop drawings shall be submitted to and approved by the Contracting Officer before delivery of the following specially designed items:

(a) Hospital Latch.
(b) Intrusion Device and Electrical Interlock Switch.
(c) Electric Lock.
(d) [redacted] Smoke Closer.
(e) Exit Devices.
(f) Viewers (Peepholes).
(g) Wardrobe Pulls.

4. DELIVERY, STORAGE AND MARKING: Items of hardware shall be delivered to the job site in their original individual containers, complete with the necessary appurtenances including screws, keys, and instructions. Each individual container shall be marked with the manufacturer's name and catalog number as they appear in the hardware schedule.

5. HARDWARE PRODUCTS:

5.1 General: As far as practicable, all locks shall be of one lock manufacturer's make, all hinges and pivots shall be of one hinge and/or pivot

manufacturer's make; and all door-closing devices shall be of one door-closing device manufacturer's make. All modifications to hardware that are necessary to conform to the construction shown or specified shall be provided as required for the specified operative and functional features. All builder's hardware indicated, specified, or necessary to completely equip the buildings shall be provided under this section, except that hardware items for aluminum entrance doors, vault doors, rolling steel doors, folding fabric doors, and glass doors are specified in other sections.

5.2 Hardware Designations: Except as otherwise specified herein and under "Hardware Sets", hardware items are specified by BHMA designations. Items included in the following standards are specified by BHMA designations: ANSI A156.1, A156.2, A156.3, A156.4, A156.6, A156.7, A156.8, A156.9; BHMA 501, 1101, 1201 and 1301.

5.3 Template Hardware: Hardware to be applied to metal and to prefinished doors shall be made to template. The templates shall be furnished promptly to the metal door, frame, and prefinished door manufacturers in order to avoid delay in door and frame manufacturing. Proper coordination shall be effected between the manufacturers of different hardware items in order that each manufacturer may furnish templates that will allow installation of hardware without interference with the installation and operation of other hardware. Dimensions of template hinges shall conform to ANSI A156.7.

5.4 Hardware for Labeled Fire Doors: In addition to meeting the requirements specified elsewhere herein, hardware for labeled fire doors shall conform to NFPA No. 80. Hardware for labeled fire doors that also serve as exit doors shall conform to NFPA Code No. 101. Labeling or listing by the Underwriters' Laboratories for the class of door being used, shall be provided as evidence of conformance to these requirements. Minimum latch throw shall be as specified on the label of the individual door. Hardware listed by Underwriters' Laboratories shall be provided except where heavier materials, larger sizes, or better grades are specified hereinafter.

5.5 Hardware Items: Hardware items shall conform to the specifications and standards listed and to the requirements specified herein. Hardware types, quantities, sizes, grades, and functions shall be as listed under "Hardware Sets". Where such data are not listed under "Hardware Sets", they shall be as specified herein.

5.5.1 Hinges: ANSI A156.1. Loose pin hinges for exterior doors and reverse-bevel interior doors shall be so constructed that the pins cannot be removed when the door is closed. Oil-impregnated bearing hinges may be provided in lieu of ball bearing hinges. Steel hinges for exterior doors shall have rust-resisting base plating under primer or other finish. Hinges shall bear the name or trademark of the manufacturer. Hinges shall be of size and type as specified under "Hardware Sets".

5.5.2 Horizontal Spring Pivot Hinges: BHMA 1101, type as specified under "Hardware Sets".

5.5.3 Locksets and Latchsets: ANSI A156.2. Locks shall have removable core type cylinders. As far as practicable, the same Series shall be used throughout the project. All locks and latchsets of the same Series shall be the product of the same manufacturer. Lock cylinders shall have not less than 5 pin tumblers. Series 1000, Grade 2 lock and latchsets may be provided in lieu of Series 4000, Grade 1 locksets, provided they perform the same functional requirements. Door trim shall be equal in design to P&F Corbin "850 Spartan".

5.5.4 Auxiliary Dead Locks: BHMA 501. All dead locks shall be the products of the same manufacturer. Locks shall have removable cores which are removed and replaced by use of special control keys. Cylinders shall have not less than 5 pin tumblers.

5.5.5 Exit Devices: ANSI A156.3. Exit devices shall be constructed of stainless steel. "Exit devices shall be constructed of forged and extruded aluminum [illegible] with forged bronze latch bolt and stainless steel touch bar surface."

5.5.6 Door Flush Bolts: BHMA 1201. Bottom flush bolts shall be provided with dustproof strikes.

5.5.7 Door Closing Devices: ANSI A156.4.

5.5.7.1 Surface Door Closers: Closers shall be provided complete with brackets, arms, mounting devices, and other features of the types required for the particular application. All surface closers shall have optional feature PT-4B unless otherwise specified.

5.5.7.2 Floor Concealed Closers: Closers shall be provided complete with load-carrying supplementary pivots. Metal cement cases with cover plates shall be provided for closers set in concrete. Cement cases shall be set before concrete is placed, and covers shall remain in place until after concrete is finished.

5.5.7.3 Smoke Closer: Smoke closers shall be an electromagnetic holder-release and door closer providing fail safe hold-open for swinging-type fire/smoke barrier doors. The smoke closer shall operate in conjunction with the central detection system. Wiring of smoke closer and connection to central detection system shall be supplied by and as specified in section entitled "Manual and Automatic Fire Alarm System". Smoke closer shall be similar and equal to Rixon-Firemark, Inc. "Smoke-Chek V", less detector.

5.5.8 Hospital Latch: Hospital latch shall be the push and pull type with positive latching. Hospital latch shall be of design equal to P&F Corbin "No. 1850" or Sargent and Company "Series 115".

5.5.9 Coordinator: Door coordinating device shall be provided on double doors where scheduled in "Hardware Sets".

5.5.10 Lead Shielded Astragal: Provide lead shielded astragals at double doors where scheduled in "Hardware Sets". Lead shielding shall be same thickness as required for doors on which applied.

5.5.11 Electronic Hardware:

5.5.11.1 Intrusion Device: Provide where scheduled, in "Hardware Sets", a concealed mounted magnetic switch. Switch shall be equal in design and function to the Von Duprin "MS-700 Series Magnetic Switches". Wiring of switch and connection to central security system shall be supplied by and as specified in section entitled "Security System".

5.5.11.2 Electric Lock: Provide electric lock where scheduled in "Hardware Sets". Electric lock shall be mortised in door frame header member. Lock shall be equal in design and function to Brink's Locking Systems, Inc. "Model 3020". Wiring of lock and connection to switching system shall be supplied by and as specified in section entitled "Nurse Call System, Code Blue System and Intercommunication System".

5.5.11.3 Electric Interlock Switch: Provide electric interlock switch where scheduled in "Hardware Sets". Switch shall be a concealed mounted magnetic switch mortised into door frame jamb or header member as indicated. Switch shall be equal in design and function to the Von Duprin "MS-700 Series Magnetic Switches". Wiring of switch and connection to X-Ray equipment controls shall be supplied by and as specified in section entitled "Interior Wiring Systems".

5.5.12 Trucking Doorway Bumper: BHMA 1101. Bumpers shall be minimum .102 inch thick stainless steel, size as indicated in "Hardware Sets". Bumpers shall be mounted with tops 36 inches above finish floor.

5.5.13 Magnetic Catch: ANSI A156.9.

5.5.14 Wardrobe Pull: ANSI A156.9.

5.5.15 Miscellaneous Hardware:

5.5.15.1 Push Plates and Pulls: ANSI A156.6, of 1/8 inch stainless steel.

5.5.15.2 Stops and Floor Stops and Holders: BHMA 1201.

5.5.15.3 Overhead Stops and Holders: ANSI A156.8.

5.5.15.4 Viewers (Peepholes): BHMA 1201.
Not Less than 145°

5.5.15.5 Silencers: BHMA 1201. Silencers shall be type L03011, and shall be provided one for each hole in metal door frames.

5.5.16 Thresholds: ANSI A156.3. Thresholds shall be of extruded aluminum alloy with satin finish, and shall have wall thickness of not less than 0.125 inch. Thresholds shall have a fluted or ribbed top surface, supporting rib or ribs, and calking serrations, all extending the full length. Thresholds shall be in one piece, neatly cut to fit the particular opening and anchored in place with approved expansion shields and 1/4 inch diameter stainless steel screws, one at each end and intermediately spaced at not more than 12 inches on centers. Thresholds for exterior doors shall be set in a bed of calking compound conforming to section entitled "Calking". Thresholds shall be of type detailed on the drawings.

5.5.17 Weatherstripping and Lightstripping: Fabricated of extruded metal with vinyl or neoprene inserts, and shall be fastened with stainless steel screws 4 inches o.c. Weatherstripping shall provide a weathertight and lightproof seal and shall permit complete closure of door without binding.

5.5.17.1 Head and Jamb Seals: Stop applied type with solid neoprene bubble insert in extruded aluminum housing not less than .090 inch thick. Aluminum shall be finished to match frame.

5.5.17.2 Door Bottom Seals: Fabricated of extruded metal with vinyl inserts. Provide as detailed.

5.5.18 Rain Drips shall be extruded aluminum, not less than .080 inch thick, finished to match door trim. Drips shall be set in calking compound conforming to section entitled "Calking", and fastened with stainless steel screws 4 inches o.c.

5.5.18.1 Door Rain Drips: Door rain drips shall be approximately 1-3/4 inches high by 5/8 inch projection and shall be fastened to the door with the bottom edge aligned with the bottom of the door.

5.5.18.2 Overhead Rain Drips: Overhead rain drips shall be approximately 1-1/2 inches high by 2-1/2 inches projection and shall be attached to the door frame with the bottom edge aligned with the door frame rabbet.

5.6 Key Cabinet Control System: Key cabinet control system shall conform to BHMA 501, type E8311, capacity shall be of such to control all keys required for this project plus 20% expansion. Provide cabinet with a single cylinder lock to lock all drawers.

5.7 Keying System: Provide great grand master keying system. The system shall be designed to provide the highest possible security consistent with the type of system being used. In addition to the permanent system, a construction master keying system shall be incorporated for interim use during construction. All pertinent keying requirements shall be as directed by the Contracting Officer.

5.7.1 Keys shall be furnished as follows:

Lock, Group or Set of Locks	Quantity of Keys
Each Cylinder Lock	2
Each Master Keyed Set	2
Each Grand Master Keyed Set	2
Great Grand Master Keyed Set	2
Construction Master Keying System	6
Control Keys for Removable Core System	2

Each change key shall be stamped with change number and set symbol, and each master key shall be stamped with set symbol as applicable. In addition, all keys shall be stamped "U.S. Property -- Do Not Duplicate".

5.8 Fasteners: Fasteners of the proper type, quality, size, quantity and finish shall be supplied with the hardware. All fasteners exposed to the weather shall be of nonferrous metal or stainless steel and shall match the finish of the trim as closely as possible. Where hardware is of stainless steel, screws and fastenings shall also be of stainless steel. Fasteners shall be of the type necessary to accomplish a permanent installation. All wood screws shall be full threaded.

5.9 Finishes: BHMA 1301. Hardware shall have finish as specified under "Hardware Sets". Surface door closers shall have aluminum lacquer finish. Exposed parts of floor concealed closers shall have finish to match lock and door trim. Where hardware finish is not specified it shall be supplied to match finish of locks and hinges.

6. INSTALLATION OF HARDWARE:

6.1 General: All hardware shall be installed in accordance with manufacturers' instructions. Except as indicated or specified otherwise, fasteners furnished with the hardware shall be used to fasten hardware in place. Fasten hardware to wood surfaces with full-threaded wood screws or sheet metal screws. Use machine screws set in expansion shields for fastening hardware to solid concrete and masonry surfaces. Use toggle bolts where required for fastening to hollow core construction. Use through bolts for mounting closers and pulls, and where necessary for satisfactory installation. After installation, protect hardware from paint, stains, blemishes and other damage until acceptance of the work. All hardware shall be adjusted properly and checked in the presence of an authorized Government representative, and all hinges, locks, latches, bolts, holders, closers and other items shall operate properly. After hardware is checked, keys shall be tagged, identified, and delivered to the Contracting Officer. All errors in cutting and fitting, and all damage to adjoining work shall be corrected, repaired and finished as directed. Installation of hardware for fire doors, lead-lined doors and other special doors shall conform to the applicable

requirements of NFPA No. 80, except that hardware application on labeled fire doors that also serve as exit doors shall conform to the applicable requirements of NFPA No. 101.

6.2 Location of Hardware on Hinged Doors: Location shall be as follows, unless otherwise indicated or specified:

Locks and latches	Centerline of lock strike 40-5/16" above floor
Cylindrical or Mortise Deadlocks	Centerline of strike 60" above floor
Push Plates	Centerline 45" above floor
Pull Plates	Centerline of grip 42" above floor
Panic Devices	Centerline of strike 40-5/16" above floor
Top Hinge	11-3/4" from rabbet section of head of frame to centerline of hinge
Bottom Hinge	13" from the finished floor to centerline of hinge
Intermediate Hinge	Equally spaced between top and bottom hinge

6.3 Door Silencers: On hollow metal frames for single doors, locate silencers directly opposite hinges. On frames for double doors, locate silencers on head rabbet of door frame, approximately 6 inches each side of centerline of door opening.

7. HARDWARE SETS:

EXTERIOR DOORS:

HW-1

Each to have:

2 Pair Hinges:	A5111, 5 x 4-1/2, BHMA 630
1 Lockset:	4000, F82, Grade 1, BHMA 630
1 Closer:	C02011
1 Overhead Stop:	C02511, BHMA 626
1 Threshold:	As Detailed
1 Set Weatherstripping:	As Specified
1 Intrusion Device:	As Specified

HW-2

Each to have:

1 Horizontal Spring Pivot Hinge:	K22181, Type B, X Top Pivot, Heavy Duty
1 Dead Lock:	E2151, BHMA 630
2 Stop and Holder:	L11301, BHMA 626
1 Threshold:	As Detailed
2 Trucking Doorway Bumpers:	K57431, BHMA 630, 36 inches long x 12 inches wide
1 Intrusion Device:	As Specified

HW-3

Each to have:

2 Pair Hinges:	A5111, 5 x 4-1/2, BHMA 630
1 Exit Device:	Type 3, Function 10, Design as Specified
1 Closer:	C02021 x Bracket
1 Overhead Stop:	C02511, BHMA 626
1 Threshold:	As Detailed
1 Set Weatherstripping:	As Specified
1 Intrusion Device:	As Specified

HW-4

Each to have:

2 Pair Hinges:	A5111, 5 x 4-1/2, BHMA 630
1 Lockset:	4000, F84, Grade 1, BHMA 630
1 Closer:	C02011
1 Overhead Holder:	C05531, BHMA 626
1 Threshold:	As Detailed
1 Set Weatherstripping:	As Specified
1 Intrusion Device:	As Specified

HW-5

Each to have:

1-1/2 Pair Hinges:	A5111, 5 x 4-1/2, BHMA 630
1 Exit Device:	Type 3, Function 10, Design as specified
1 Closer:	C02021 x Bracket
1 Overhead Stop:	C02511, BHMA 626
1 Threshold:	As Detailed
1 Set Weatherstripping:	As Specified
1 Intrusion Device:	As Specified

HW-6

Each pair to have:

3 Pair Hinges:	A5111, 5 x 4-1/2, BHMA 630 (At Doors M013 & M515 only)
4 Pair Hinges:	A5111, 5 x 4-1/2, BHMA 630
1 Lockset:	4000, F84, Grade 1, BHMA 630 (Active)
1 Set Flush Bolts:	L14081, BHMA 626 (Inactive)
1 Closer:	C02021 x Bracket (Active)
2 Overhead Holders:	C05531, BHMA 626
1 Threshold:	As Detailed
1 Set Weatherstripping:	As Specified
1 Intrusion Device:	As Specified (Active)

HW-7

Each to have:

1 Intrusion Device:	As Specified
1 Padlock or Cylinder as required.	
Balance of hardware by door manufacturer.	

HW-8

Each to have:

1-1/2 Pair Hinges:	A5111, 4-1/2 x 4-1/2, BHMA 630 (At Door P114 only)
2 Pair Hinges:	A5111, 4-1/2 x 4-1/2, BHMA 630
1 Lockset:	4000, F82, Grade 1, BHMA 630
1 Closer:	C02021 x Bracket
1 Overhead Stop:	C02511, BHMA 626
1 Threshold:	As Detailed
1 Set Weatherstripping:	As Specified
1 Intrusion Device:	As Specified

HW-9

Each pair to have:

2 Floor Concealed Closers:	C06061 x Walking Beam Top Pivot
2 Exit Devices:	Type 6, Function 02, Design as specified
2 Overhead Stops:	C01511 (No holdopen) BHMA 630
2 Pulls:	By Door Manufacturer
2 Intrusion Devices:	As Specified

HW-10

Each to have:

1 Floor Concealed Closer:	C06061 x Walking Beam Top Pivot
1 Exit Device:	Type 6, Function 02, Design as specified
1 Overhead Stop:	C01511 (No holdopen) BHMA 630
1 Pull:	By Door Manufacturer
1 Intrusion Device:	As Specified

HW-11

Each pair to have:

4 Pair Hinges:	A5111, 5 x 4-1/2, BHMA 630
1 Dead Lock:	E2151, BHMA 626 (Active)
1 Set Flush Bolts:	L14081, BHMA 626 (Inactive)
2 Closers:	C02021 x Bracket
2 Push Plates:	J300, flat, 8 x 16, BHMA 630
2 Pulls:	J400, straight, with plate 8 x 16, BHMA 630
2 Overhead Holders:	C05531, BHMA 626
1 Threshold:	As Detailed
1 Set Weatherstripping:	As Specified
1 Intrusion Device:	As Specified (Active)

HW-12

Each to have:

2 Pair Hinges:	A5111, 5 x 4-1/2, BHMA 630
1 Exit Device:	Type 3, Function 10, Design as specified
1 Closer:	C02021 x Bracket
1 Overhead Stop:	C02511, BHMA 626
1 Threshold:	As Detailed
1 Set Weatherstripping:	As Specified
1 Intrusion Device:	As Specified

HW-13

Each pair to have:

2 Floor Concealed Closers:	C06061 x Walking Beam Top Pivot
2 Overhead Stops:	C01511 (No holdopen) BHMA 630
4 Push-Pulls:	By Door Manufacturer
1 Threshold:	As Detailed
2 Intrusion Devices:	As Specified

HW-14

Each pair to have:

4 Pair Hinges:	A5111, 4-1/2 x 4-1/2, BHMA 630
1 Exit Device:	Type 8, Function 10, Design as specified
1 Exit Device	Type 8, Function 01, Design as specified
2 Closers:	C02021 x Bracket
2 Overhead Holders:	C05531, BHMA 626
1 Threshold:	As Detailed
1 Set Weatherstripping:	As Specified
2 Intrusion Devices:	As Specified

HW-15

Each pair to have:

2 Floor Concealed Closers:	C06061 x Walking Beam Top Pivot
2 Overhead Stops:	C01511 (No holdopen) BHMA 630
2 Dead Locks:	E2151, BHMA 630 - Locate in bottom rail for locking into floor.
4 Push-Pulls:	By Door Manufacturer
1 Threshold:	As Detailed
2 Intrusion Devices:	As Specified

HW-16

Each to have:

2 Pair Hinges:	A5111, 5 x 4-1/2, BHMA 630
1 Lockset:	Supplied by U.S.P.S.
1 Closer:	C02021 x Bracket
1 Overhead Holder:	C05531, BHMA 626
1 Threshold:	As Detailed
1 Set Weatherstripping:	As Specified
1 Door Rain Drip:	As Specified

HW-17

Each pair to have:

4 Pair Hinges:	A5111, 4-1/2 x 4-1/2, BHMA 630
1 Lockset:	4000, F84, Grade 1, BHMA 630 (Active)
1 Set Flush Bolts:	L14081, BHMA 626 (Inactive)
1 Closer:	C02021 x Bracket (Active)
2 Overhead Holders:	C05531, BHMA 626
1 Intrusion Device:	As Specified (Active)

HW-18

Each to have:

1-1/2 Pair Hinges:	A5111, 4-1/2 x 4-1/2, BHMA 630
1 Lockset:	4000, F82, Grade 1, BHMA 630
1 Closer	C02021 x Bracket
1 Overhead Stop:	C02511, BHMA 626
1 Threshold:	As Detailed
1 Set Weatherstripping:	As Specified

HW-19

Each to have:

1-1/2 Pair Hinges:	A5111, 5 x 4-1/2, BHMA 630
1 Lockset:	4000, F87, Grade 1, BHMA 630
1 Closer:	C02021 x Bracket
1 Overhead Stop:	C02511, BHMA 626
1 Threshold:	As Detailed
1 Set Weatherstripping:	As Specified
1 Door Rain Drip:	As Specified
1 Overhead Rain Drip:	As Specified
1 Intrusion Device:	As Specified

HW-20

Each to have:

1-1/2 Pair Hinges:	A5111, 5 x 4-1/2, BHMA 630
1 Lockset:	4000, F86, Grade 1, BHMA 630
1 Overhead Holder:	C05531, BHMA 626
1 Threshold:	As Detailed
1 Set Weatherstripping:	As Specified
1 Door Rain Drip:	As Specified
1 Overhead Rain Drip:	As Specified
1 Intrusion Device:	As Specified

HW-21

Each to have:

1-1/2 Pair Hinges:	A5111, 5 x 4-1/2, BHMA 630
1 Lockset:	4000, F86, Grade 1, BHMA 630
1 Overhead Holder:	C05531, BHMA 626
1 Threshold:	As Detailed
1 Set Weatherstripping:	As Specified
1 Door Rain Drip:	As Specified
1 Overhead Rain Drip:	As Specified

HW-22

Each to have:

1 Floor Concealed Closer:	C06061 x Walking Beam Top Pivot
1 Overhead Stop:	C01511 (No holdopen) BHMA 630
1 Deadlock:	E2151, BHMA 630 - Locate in bottom rail for locking into floor.
2 Push-Pulls:	By Door Manufacturer
1 Threshold:	As Detailed
1 Intrusion Device:	As Specified

HW-23

Each to have:

2 Pair Hinges:	A5111, 5 x 4-1/2, BHMA 630
1 Exit Device:	Type 3, Function 10, Design as Specified
1 Closer:	C02021 x Bracket
1 Overhead Stop:	C02511, BHMA 626
1 Threshold:	As Detailed
1 Set Weatherstripping:	As Specified

HW-24

Each to have:

2 Pair Hinges:	A5111, 4-1/2 x 4-1/2, BHMA 630
1 Lockset:	4000, F86, Grade, BHMA 630
1 Overhead Holder:	C05531, BHMA 626
1 Threshold:	As Detailed
1 Set Weatherstripping:	As Specified
1 Door Rain Drip:	As Specified
1 Overhead Rain Drip:	As Specified

INTERIOR DOORS:

HW-101

Each to have:

1-1/2 Pair Hinges:	A8111, 5 x 4-1/2, BHMA 652
1 Hospital Latch:	As Specified, BHMA 626
1 Dead Lock:	E2151, BHMA 626
1 Closer:	C02011
1 Overhead Stop:	C05541, BHMA 626

HW-102

Each to have:

1-1/2 Pair Hinges:	A8112, 4-1/2 x 4-1/2, BHMA 652
1 Closer:	C02011
1 Push Plate:	J300, flat, 8 x 16, BHMA 630
1 Pull:	J400, straight, with plate 8 x 16, BHMA 630
1 Overhead Stop:	C05541, BHMA 626

HW-103

Each to have:

1-1/2 Pair Hinges:	A8112, 4-1/2 x 4-1/2, BHMA 652
1 Closer:	C02011
1 Push Plate:	J300, flat, 8 x 16, BHMA 630
1 Pull:	J400, straight, with plate 8 x 16, BHMA 630
1 Dead Lock:	E2151, BHMA 626
1 Overhead Stop:	C05541, BHMA 626

HW-104

Each to have:

1-1/2 Pair Hinges:	A8133, 4-1/2 x 4-1/2, BHMA 652
1 Lockset:	4000, F84, Grade 1, BHMA 626
1 Overhead Stop:	C05541, BHMA 626

HW-105

Each pair to have:

1-1/2 Pair Hinges:	A8111, 5 x 4-1/2, BHMA 652 (Active)
1-1/2 Pair Hinges:	A8133, 5 x 4-1/2, BHMA 652 (Inactive)
1 Hospital Latch:	As Specified, BHMA 626 (Active)
1 Dead Lock:	E2151, BHMA 626 (Active)
1 Set Flush Bolts:	L84202, BHMA 652 (Inactive)
1 Closer:	C02011 (Active)
1 Overhead Holder:	C05531, BHMA 626 (Active)

HW-106

Each to have:

1-1/2 Pair Hinges:	A8133, 4-1/2 x 4-1/2, BHMA 652
1 Passage Latch:	4000, F75, Grade 1, BHMA 626
1 Overhead Stop:	C05541, BHMA 626

HW-107

Each to have:

1-1/2 Pair Hinges:	A8112, 4-1/2 x 4-1/2, BHMA 652
1 Lockset:	4000, F84, Grade 1, BHMA 626
1 Closer:	C02011
1 Overhead Stop:	C05541, BHMA 626
1 Intrusion Device:	As Specified (At Door C116 only)

HW-108

Each to have:

2 Pair Hinges:	A8111, 5 x 4-1/2, BHMA 652
1 Hospital Latch:	As Specified, BHMA 626
1 Dead Lock:	E2151, BHMA 626
1 Closer:	C02011
1 Overhead Stop:	C05541, BHMA 626

HW-109

Each to have:

2 Pair Hinges:	A8133, 5 x 4-1/2, BHMA 652
1 Lockset:	4000, F84, Grade 1, BHMA 626
1 Stop:	L52101, BHMA 630

HW-110

Each to have:

1 Pair Hinges:	A8133, 4-1/2 x 4-1/2, BHMA 652
1 Lockset:	4000, F84, Grade 1, BHMA 626
1 Stop:	L52101, BHMA 630

HW-111

Each pair to have:

4 Pair Hinges:	A8112, 4-1/2 x 4-1/2, BHMA 652
1 Lockset:	4000, F84, Grade 1, BHMA 626 (Active)
2 Closers	C02011
1 Set Flush Bolts:	L14081, BHMA 626 (Inactive)
2 Stops:	L52101, BHMA 630
1 Intrusion Device:	As Specified (Active)

HW-112

Each to have:

2 Pair Hinges:	A8133, 4-1/2 x 4-1/2, BHMA 652
1 Lockset:	4000, F84, Grade 1, BHMA 626
1 Stop:	L52101, BHMA 630

HW-113

Each pair to have:

4 Pair Hinges:	A8411, 5, BHMA 652 (At Door M205D only)
4 Pair Hinges:	A8111, 5 x 4-1/2, BHMA 652
1 Lockset:	4000, F84, Grade 1, BHMA 626 (Active)
2 Closers	C02011
1 Set Flush Bolts:	L14081, BHMA 626 (Inactive)
2 Stops:	L52101, BHMA 630

HW-114

Each to have:

2 Pair Hinges:	A8111, 5 x 4-1/2, BHMA 652
1 Lockset:	4000, F84, BHMA 626
1 Closer:	C02011
1 Stop:	L52101, BHMA 630

HW-115

Each to have:

2 Pair Hinges:	A8112, 4-1/2 x 4-1/2, BHMA 652
1 Closer:	C02011
1 Push Plate:	J300, Flat, 8 x 16, BHMA 630
1 Pull:	J400, straight, with plate 8 x 16, BHMA 630
1 Overhead Stop:	C05541, BHMA 626

HW-116

Each to have:

2 Pair Hinges:	A8411, 5, BHMA 652
1 Lockset:	4000, F84, Grade 1, BHMA 626
1 Closer:	C02011
1 Overhead Stop:	C05541, BHMA 626
1 Intrusion Device:	As Specified

HW-117

Each to have:

2 Pair Hinges:	A8411, 5, BHMA 652
1 Lockset:	4000, F84, Grade 1, BHMA 626
1 Closer:	C02011
1 Overhead Stop:	C05541, BHMA 626

HW-118

Each pair to have:

4 Pair Hinges:	A8411, 5, BHMA 652
2 Exit Devices:	Type 2, Function 08 (Less Lock), Design as specified
2 Smoke Closers:	As Specified
1 Door Coordinating Device:	As Specified

HW-119

Each to have:

1-1/2 Pair Hinges:	A8112, 4-1/2 x 4-1/2, BHMA 652
1 Closer:	C02011
1 Push Plate:	Supplied in section entitled "Interior Signage"
1 Pull:	J400, straight, with plate 8 x 16, BHMA 630
1 Overhead Stop:	C05541, BHMA 626

HW-120

Each to have:

1-1/2 Pair Hinges:	A5412, 4-1/2, BHMA 630
1 Lockset:	4000, F82, Grade 1, BHMA 630
1 Closer:	C02011
1 Overhead Stop:	C05541, BHMA 626
1 Intrusion Device:	As Specified

HW-121

Each pair to have:

4 Pair Hinges:	A5411, 4-1/2, BHMA 630
2 Exit Devices:	Type 2, Function 10, Design as specified
2 Closers:	C02011
2 Overhead Stops:	C05541, BHMA 626

HW-122

Each to have:

1-1/2 Pair Hinges:	A5111, 5 x 4-1/2, BHMA 630
1 Closer:	C02011
1 Push Plate:	J300, flat, 8 x 16, BHMA 630
1 Overhead Stop:	C05541, BHMA 626

HW-123

Each to have:

1-1/2 Pair Hinges:	A5111, 5 x 4-1/2, BHMA 630
1 Closer:	C02011
1 Push Plate:	J300, flat, 8 x 16, BHMA 630
1 Pull:	J400, straight, with plate 8 x 16, BHMA 630
1 Overhead Stop:	C05541, BHMA 626

HW-124

Each pair to have:

3 Pair Hinges:	A5411, 5, BHMA 630
1 Hospital Latch:	As Specified, BHMA 630
1 Dead Lock:	E2151, BHMA 626 (Active)
1 Set Flush Bolts:	L84202, BHMA 652 (Inactive)
2 Closers:	C02011
2 Overhead Holders:	C05531, BHMA 626

HW-125

Each to have:

2 Pair Hinges:	A8411, 5, BHMA 652
1 Lockset:	4000, F86, Grade 1, BHMA 626
1 Closer:	C02011
1 Overhead Stop:	C05531, BHMA 626

HW-126

Each pair to have:

2 Floor Concealed Closers:	C06061 x Walking Beam Top Pivot
2 Overhead Stops:	C01511 (No holdopen) BHMA 630
4 Push-Pulls:	By Door Manufacturer

HW-127

Each pair to have:

4 Pair Hinges:	A8411, 5, BHMA 652
2 Exit Devices:	Type 2, Function 01, Design as specified
2 Smoke Closers:	As Specified

HW-128

Each pair to have:

4 Pair Hinges:	A8111, 5 x 4-1/2, BHMA 652
2 Closers:	C02011
2 Push Plates:	J300, flat, 8 x 16, BHMA 630
2 Overhead Stops:	C05541, BHMA 626

HW-129

Each pair to have:

3 Pair Hinges:	A8411, 5, BHMA 652
2 Exit Devices:	Type 2, Function 01, Design as specified
2 Smoke Closers:	As Specified
1 Dead Lock:	E2151, BHMA 626 - Locate in bottom rail for locking into floor.

HW-130

Each to have:

Cylinders as required.
Balance of hardware by door manufacturer.

HW-131

Each to have:

2 Pair Hinges:	A8133, 4-1/2 x 4-1/2, BHMA 652
1 Privacy Lock:	4000, F76, Grade 1, BHMA 626
1 Overhead Stop:	C05541, BHMA 626

HW-132

Each to have:

1 ½ Pair Hinges:	A8133, 4-1/2 x 4-1/2, BHMA 652
1 Passage Latch:	4000, F75, Grade 1, BHMA 626
1 Overhead Stop:	C05541, BHMA 626

HW-133

Each to have:

2 Pair Hinges:	A8112, 4-1/2 x 4-1/2, BHMA 652
1 Lockset:	4000, F84, Grade 1, BHMA 626
1 Closer:	C02011
1 Overhead Stop:	C05541, BHMA 626

HW-134

Each to have:

2 Pair Hinges:	A8133, 4-1/2 x 4-1/2, BHMA 652
1 Lockset:	4000, F84, Grade 1, BHMA 626
1 Overhead Stop:	C05541, BHMA 626

HW-135

Each to have:

1-1/2 Pair Hinges:	A8412, 4-1/2, BHMA 652
1 Hospital Latch:	As Specified, BHMA 626
1 Dead Lock:	E2151, BHMA 626
1 Closer:	C02011
1 Overhead Stop:	C05541, BHMA 626

HW-136

Each to have:

1-1/2 Pair Hinges:	A8133, 4-1/2 x 4-1/2, BHMA 652
1 Lockset:	4000, F82, Grade 1, BHMA 626
1 Overhead Stop:	C05541, BHMA 626

HW-137

Each to have:

1-1/2 Pair Hinges:	A8133, 4-1/2 x 4-1/2, BHMA 652
1 Privacy Lock:	4000, F76, Grade 1, BHMA 626
1 Overhead Stop:	C05541, BHMA 626

HW-138

Each pair to have:

3 Pair Hinges:	A8412, 4-1/2, BHMA 652
1 Lockset:	4000, F84, Grade 1, BHMA 626 (Active)
1 Set Flush Bolts:	L84202, BHMA 626 (Inactive)
1 Closer:	C02011
2 Overhead Stop:	C05541, BHMA 626
1 Intrusion Device:	As Specified (At Door C115 only)

HW-139

Each to have:

1-1/2 Pair Hinges:	A8412, 4-1/2, BHMA 652
1 Lockset:	4000, F91, Grade 1, BHMA 626
1 Closer:	C02011
1 Overhead Stop:	C05541, BHMA 626
1 Intrusion Device:	As Specified

HW-140

Each to have:

1-1/2 Pair Hinges:	A8411, 5, BHMA 652
1 Hospital Latch:	As Specified, BHMA 626
1 Dead Lock:	E2151, BHMA 626 (Delete at Door E149)
1 Closer:	C02011
1 Overhead Stop:	C05541, BHMA 626
1 Intrusion Device:	As Specified (At Door C119 only)

HW-141

Each to have:

1-/2 Pair Hinges:	A8412, 4-1/2, BHMA 652
1 Lockset:	4000, F84, Grade 1, BHMA 626
1 Closer:	C02011
1 Overhead Stop:	C05541, BHMA 626
1 Intrusion Device:	As Specified

HW-142

Each to have:

1-1/2 Pair Hinges:	A8412, 4-1/2, BHMA 652
1 Hospital Latch:	As Specified, BHMA 626
1 Dead Lock:	E2151, BHMA 626
1 Closer:	C02011
1 Overhead Stop:	C05541, BHMA 626
1 Intrusion Device:	As Specified

HW-143

Each to have:

1-1/2 Pair Hinges:	A8112, 4-1/2 x 4-1/2, BHMA 652
1 Hospital Latch:	As Specified, BHMA 626
1 Dead Lock:	E2151, BHMA 626
1 Closer:	C02011
1 Overhead Stop:	C05541, BHMA 626
1 Intrusion Device:	As Specified

HW-144

Each to have:

1-1/2 Pair Hinges:	A8111, 5 x 4-1/2, BHMA 652
1 Hospital Latch:	As Specified, BHMA 626
1 Dead Lock:	E2151, BHMA 626
1 Closer:	C02011
1 Overhead Stop:	C05541, BHMA 626
1 Intrusion Device:	As Specified

HW-145

Each to have:

All hardware by Door Manufacturer

HW-146

Each to have:

1-1/2 Pair Hinges:	A8112, 4-1/2 x 4-1/2, BHMA 652
1 Hospital Latch:	As Specified, BHMA 626
1 Dead Lock:	E2151, BHMA 626
1 Closer:	C02011
1 Overhead Stop:	C05541, BHMA 626

HW-147

Each to have:

2 ~~1-1/2~~ Pair Hinges:	A8411, 5, BHMA 652
1 Exit Device:	Type 3, Function 08 (Less Lock) Design as specified
1 Smoke Closer:	As Specified

HW-148

Each to have:

1-1/2 Pair Hinges:	A8133, 4-1/2 x 4-1/2, BHMA 652
1 Dead Lock:	E2151, BHMA 626

HW-149

Each to have:

1-1/2 Pair Hinges:	A8412, 4-1/2, BHMA 652
1 Hospital Latch:	As Specified, BHMA 626
1 Closer:	C02011
1 Overhead Stop:	C05541, BHMA 626

HW-150

Each to have:

1-1/2 Pair Hinges:	A8412, 4-1/2, BHMA 652
1 Lockset:	4000, F86, Grade 1, BHMA 626
1 Closer:	C02011
1 Overhead Stop:	C05541, BHMA 626

HW-151

Each to have:

2 Pair Hinges:	A8111, 5 x 4-1/2, BHMA 652
1 Exit Latch:	4000, F89, Grade 1, BHMA 626
1 Overhead Holder:	C05531, BHMA 626

HW-152

Each pair to have:

3 Pair Hinges:	A8111, 5 x 4, BHMA 652
1 Dead Lock:	E2151, BHMA 626 (Active)
1 Set Flush Bolts:	L14081, BHMA 626 (Inactive)
1 Pull:	J400 straight, with plate 8 x 16, BHMA 630. Locate Pull on inside of active leaf.

Balance of Hardware by section entitled "Automatic Operators"

HW-153

Each to have:

2 Pair Hinges:	A8112, 4-1/2 x 4-1/2, BHMA 652
1 Dead Lock:	E2181, BHMA 626
1 Closer:	C02011
1 Intrusion Device:	As Specified

Door to have warning sign on lock side "Emergency Exit Only - Alarm Will Sound if Opened".

HW-154

Each to have:

1-1/2 Pair Hinges:	A8411, 5, BHMA 652
1 Lockset:	4000, F84, Grade 1, BHMA 626
1 Closer:	C02011
1 Overhead Stop:	C05541, BHMA 626

HW-155

Each pair to have:

4 Pair Hinges:	A8111, 5 x 4-1/2, BHMA 652
2 Push Plates:	J300, flat, 8 x 16, BHMA 630
2 Smoke Closers:	As Specified

HW-156

Each to have:

1-1/2 Pair Hinges:	A8111, 5 x 4-1/2, BHMA 652
1 Lockset:	4000, F84, Grade 1, BHMA 626
1 Overhead Stop:	C05541, BHMA 626

HW-157

Each to have:

1-1/2 Pair Hinges:	A8411, 5, BHMA 652
1 Exit Device:	Type 3, Function 08 (Less Lock), Design as specified
1 Closer:	C02011
1 Overhead Stop:	C05541, BHMA 626

HW-158

Each pair to have:

3 Pair Hinges:	A8133, 4-1/2 x 4-1/2, BHMA 652
1 Dead Lock:	E2151, BHMA 626 (Active)
1 Set Flush Bolts:	L84202, BHMA 652 (Inactive)

HW-159

Each to have:

1-1/2 Pair Hinges:	A8412, 4-1/2 BHMA 652
1 Exit Device:	Type 3, Function 08 (Less lock), Design as specified
1 Smoke Closer:	As Specified

HW-160

Each to have:

1-1/2 Pair Hinges:	A8412, 4-1/2, BHMA 652
1 Privacy Lock:	4000, F75, Grade 1, BHMA 626
1 Closer:	C02011
1 Overhead Stop:	C05541, BHMA 626
1 Automatic Door Bottom:	As Detailed
1 Set Light Stripping:	As Specified

HW-161

Each to have:

1-1/2 Pair Hinges:	A8112, 4-1/2 x 4-1/2, BHMA 652
1 Privacy Lock:	4000, F75, Grade 1, BHMA 626
1 Overhead Stop:	C05541, BHMA 626
1 Automatic Door Bottom:	As Detailed
1 Set Light Stripping:	As Specified

HW-162

Each to have:

1-1/2 Pair Hinges:	A8112, 4-1/2 x 4-1/2, BHMA 652
1 Lockset:	Supplied by U.S.P.S.
1 Closer:	C02011
1 Overhead Stop:	C05541, BHMA 626
1 Intrusion Device:	As Specified (At Door E123 only)

HW-163

Each to have:

1-1/2 Pair Hinges:	A8412, 4-1/2, BHMA 652
1 Lockset:	4000, F82, Grade 1, BHMA 626
1 Closer:	C02011
1 Overhead Stop:	C05541, BHMA 626

HW-164

Each to have:

1-1/2 Pair Hinges:	A8411, 5, BHMA 652
1 Exit Device:	Type 3, Function 08, Design as specified
1 Closer:	C02011
1 Overhead Stop:	C05541, BHMA 626
1 Intrusion Device:	As Specified

HW-165

Each pair to have:

4 Pair Hinges:	A8133, 4-1/2 x 4-1/2, BHMA 652
1 Lockset:	4000, F84, Grade 1, BHMA 626 (Active)
1 Set Flush Bolts:	L14081, BHMA 626 (Inactive)
2 Stops:	L52101, BHMA 630

HW-166

Each pair to have:

3 Pair Hinges:	A8111, 5 x 4-1/2, BHMA 652
1 Hospital Latch:	As Specified, BHMA 626 (Active)
1 Dead Latch:	E2151, BHMA 626 (Active)
1 Set Flush Bolts:	L14081, BHMA 626 (Inactive)
2 Closers:	C02011
2 Overhead Stops:	C05541, BHMA 626
1 Intrusion Device:	As Specified (Active)

HW-167

Each to have:

1-1/2 Pair Hinges:	A8133, 5 x 4-1/2, BHMA 652
1 Dead Lock:	E2151, BHMA 626

HW-168

Each to have:

1 Floor Concealed Closer:	C06061 x Walking Beam Top Pivot
1 Overhead Stop:	C01511 (No holdopen) BHMA 630
2 Push-Pulls:	By Door Manufacturer

HW-169

Each pair to have:

4 Pair Hinges:	A8133, 4-1/2 x 4-1/2, BHMA 652
1 Lockset:	4000, F84, Grade 1, BHMA 626 (Active)
1 Set Flush Bolts:	L84202, BHMA 652 (Inactive)
2 Overhead Stops:	C05541, BHMA 626

HW-170

Each to have:

2 Pair Hinges:	A8112, 4-1/2 x 4-1/2, BHMA 652
1 Closer:	C02011
1 Push Plate:	Supplied in section entitled "Interior Signage"
1 Pull:	J400, straight with plate 8 x 16, BHMA 630
1 Overhead Stop:	C05541, BHMA 626

HW-171

Each to have:

2 Pair Hinges:	~~A8111, 5 x 4-1/2~~, BHMA 652
1 Push Plate:	J300 flat, 8 x 16, BHMA 630
1 Pull:	J400, straight, with plate 8 x 16, BHMA 630
1 Smoke Closer:	As Specified

DELE

HW-172

Each to have:

2 Pair Hinges:	A8411, 5, BHMA 652
1 Exit Device:	Type 3, Function 08, Design as specified
1 Closer:	C02011
1 Overhead Stop:	C05541, BHMA 626

HW-173

Each to have:

2 Pair Hinges:	A8411, 4-1/2, BHMA 652
1 Exit Device:	Type 3, Function 08, Design as specified
1 Closer:	C02011
1 Overhead Stop:	C05541, BHMA 626

HW-174

Each to have:

DELETED

2 Pair Hinges:	A8411, 5, BHMA 652
1 Hospital Latch:	As Specified, BHMA 626
1 Dead Lock:	E2751, BHMA 626
1 Closer:	C02011
1 Overhead Stop:	C05541, BHMA 626

HW-175

Each to have:

2 Pair Hinges:	A8412, 4-1/2, BHMA 652
1 Passage Latch:	4000, F75, Grade 1, BHMA 626
1 Closer:	C02011
1 Overhead Stop:	C05541, BHMA 626

HW-176

Each to have:

1-1/2 Pair Hinges:	A8412, 4-1/2, BHMA 652
1 Passage Set:	4000, F75, Grade 1, BHMA 626
1 Closer:	C02011
1 Overhead Stop:	C05541, BHMA 626

HW-177

Each to have:

1-1/2 Pair Hinges:	A8412, 4-1/2, BHMA 652
1 Lockset:	4000, F84, Grade 1, BHMA 626
1 Closer:	C02011
1 Overhead Stop:	C05541, BHMA 626

HW-178

Each pair to have:

1-1/2 Pair Hinges:	A8111, 5 x 4-1/2, BHMA 652 (Active)
1-1/2 Pair Hinges:	A8133, 5 x 4-1/2, BHMA 652 (Inactive)
1 Hospital Latch:	As Specified, BHMA 626 (Active)
1 Set Flush Bolts:	L84202, BHMA 652 (Inactive)
1 Closer:	C02011 (Active)
1 Overhead Holder:	C05531, BHMA (Active)

HW-179

Each to have:

All hardware to be lead shielded.

2 Pair Hinges:	A8411, 5, BHMA 652
1 Lockset:	4000, F82, Grade 1, BHMA 626
1 Closer:	C02011
1 Overhead Stop:	C05541, BHMA 626

HW-180

Each pair to have:

4 Pair Hinges:	A8111, 5 x 4-1/2, BHMA 652
2 Closers:	C02011
2 Push Plates:	J300, flat, 8 x 16, BHMA 630
1 Dead Lock:	E2151, BHMA 626
1 Set Flush Bolts:	L84202, BHMA 652
2 Overhead Stops:	C05541, BHMA 626

HW-181

Each pair to have:
All hardware to be lead shielded.

4 Pair Hinges:	A5411, 5, BHMA 630
1 Hospital Latch:	As Specified, BHMA 630 (Active)
1 Dead Lock:	E2151, BHMA 630 (Active)
1 Set Flush Bolts:	L84202, BHMA 630 (Inactive)
2 Closers:	C02011 w/Holdopen
2 Overhead Stops:	C05541, BHMA 626
1 Astragal:	As Specified
1 Door Coordinating Device:	As Specified

HW-182

Each to have:

All hardware to be lead shielded.

2 Pair Hinges:	A5411, 5, BHMA 630
1 Privacy Lock:	4000, F76, Grade 1, BHMA 630
1 Closer:	C02011
1 Overhead Stop:	C05541, BHMA 626

HW-183

Each to have:
All hardware to be lead shielded.

2 Pair Hinges:	A5411, 5, BHMA 630
1 Hospital Latch:	As Specified
1 Closer:	C02011
1 Overhead Stop:	C05541, BHMA 626

HW-184

Each pair to have:
All hardware to be lead shielded.

4 Pair Hinges:	A5411, 5, BHMA 630
1 Hospital Latch:	As Specified, BHMA 630 (Active)
1 Set Flush Bolts:	L84202, BHMA 630 (Inactive)
2 Closers:	C02011 w/Holdopen
2 Overhead Stops:	C05541, BHMA 626
1 Astragal:	As Specified
1 Door Coordinating Device:	As Specified
1 Electric Lock:	As Specified and mounted in frame head at active leaf.

HW-185

Each pair to have:

3 Pair Hinges: A5111, 5 x 4, BHMA 630
Balance of Hardware by section entitled "Automatic Operators"

HW-186

Each to have:

1-1/2 Pair Hinges:	A8111, 4-1/2 x 4-1/2, BHMA 652
1 Lockset:	4000, F86, Grade 1, BHMA 626
1 Closer:	C02011
1 Overhead Stop:	C05541, BHMA 626

HW-187

Each pair to have:

3 Pair Hinges:	A5111, 5 x 4-1/2, BHMA 630
1 Hospital Latch:	As Specified, BHMA 630 (Active)
1 Dead Lock:	E2151, BHMA 630 (Active)
1 Set Flush Bolts:	L84202, BHMA 630 (Inactive)
1 Closer:	C02011 w/Holdopen (Active)
1 Overhead Stop:	C05541, BHMA 626 (Active)

HW-188

Each to have:

1-1/2 Pair Hinges:	A5111, 4-1/2 x 4-1/2, BHMA 630
1 Hospital Latch:	As Specified, BHMA 630
1 Closer:	C02011
1 Overhead Stop:	C05541, BHMA 626

HW-189

Each to have:

1 Horizontal Spring Pivot Hinge:	K82181, Type A, x Top Pivot, BHMA 630
2 Push Plates:	J300, flat, 8 x 16, BHMA 630
1 Dead Lock:	E2151, BHMA 630
1 Overhead Stop:	C04541, BHMA 626 (Double Acting)

HW-190

Each to have:

1-1/2 Pair Hinges:	A5111, 4-1/2 x 4-1/2, BHMA 630
2 Push-Pull Plates:	J300, 4 x 16, BHMA 630
1 Closer:	C02011
1 Overhead Stop:	C05541, BHMA 626

HW-191

Each to have:

1-1/2 Pair Hinges:	A8111, 5 x 4-1/2, BHMA 652
1 Lockset:	4000, F86, Grade 1, BHMA 626
1 Closer:	C02011
1 Overhead Stop:	C05541, BHMA 626

HW-192

Each pair to have:

3 Pair Hinges:	A8111, 4-1/2 x 4-1/2, BHMA 652
1 Exit Device:	Type 2, Function 09, Design as specified
1 Exit Device:	Type 2, Function 01, Design as specified
2 Closers:	C02011
2 Overhead Stops:	C05541, BHMA 626

HW-193

Each pair to have:

3 Pair Hinges:	A8111, 4-1/2 x 4-1/2, BHMA 652
2 Closers:	C02011
2 Push Plates:	J300, flat, 8 x 16, BHMA 630
2 Pulls:	J400, straight, with plate 8 x 16, BHMA 630
2 Overhead Stops:	C05541, BHMA 626

HW-194

Each to have:

DELETED

1-1/2 Pair Hinges:	A8111, 5 x 4-1/2, BHMA 652
1 Push Plate:	J300, flat, 8 x 16, BHMA 630
1 Pull:	J400, straight, with plate 8 x 16, BHMA 630
1 Smoke Closer:	As Specified

HW-195

Each pair to have:

4 Pair Hinges:	A8111, 5 x 4-1/2, BHMA 652
2 Smoke Closers:	As Specified
2 Push Plates:	J300, flat, 8 x 16, BHMA 630
2 Pulls:	J400, straight, with plate 8 x 16, BHMA 630

HW-196

Each to have:

1-1/2 Pair Hinges:	A8111, 5 x 4-1/2, BHMA 652
1 Hospital Latch:	As Specified, BHMA 626
1 Stop:	L52101, BHMA 630

HW-197

Each to have:

1-1/2 Pair Hinges:	A8133, 4-1/2 x 4-1/2, BHMA 652
1 Magnetic Catch:	B43161, Type 2, Jamb Mount
1 Dead Lock:	E27101, BHMA 626
1 Pull:	B52012, BHMA 630

HW-198

Each pair to have:

3 Pair Hinges:	A8133, 4-1/2 x 4-1/2, BHMA 652
2 Magnetic Catches:	B43161, Type 2, Jamb Mount
2 Dead Locks:	E27101, BHMA 626 → Deleted by submittal review
2 Pulls:	B52012, BHMA 630

HW-199

Each pair to have:
All hardware to be lead shielded.

4 Pair Hinges:	A5411, 5, BHMA 630
1 Hospital Latch:	As Specified, BHMA 630 (Active)
1 Dead Lock:	E2151, BHMA 630 (Active)
1 Set Flush Bolts:	L84202, BHMA 652 (Inactive)
1 Closer:	C02011 w/Holdopen (Active)
1 Overhead Stop:	C05541, BHMA 626
1 Astragal:	As Specified
2 Elec. Interlock Switches:	As Specified

HW-200

Each pair to have:

3 Pair Hinges:	A5133, 4-1/2 x 4-1/2, BHMA 630
1 Lockset:	4000, F84, Grade 1, BHMA 630 (Active)
1 Set Flush Bolts:	L84202, BHMA 652 (Inactive)
2 Overhead Stops:	C05541, BHMA 626

HW-201

Each to have:
All hardware to be lead shielded.

2 Pair Hinges:	A5411, 5, BHMA 630
1 Hospital Latch:	As Specified, BHMA 630
1 Dead Lock:	E2151, BHMA 630
1 Closer:	C02011
1 Overhead Stop:	C05541, BHMA 626
1 Elec. Interlock Switch:	As Specified

HW-202

Each to have:
All hardware to be lead shielded.

DELETED

2 Pair Hinges:	A5411, 5, BHMA 630
1 Hospital Latch:	As Specified, BHMA 630
1 Dead Lock:	E2151, BHMA 630
1 Closer:	C02011 w/Holdopen
1 Overhead Stop:	C05541, BHMA 626
1 Elect. Interlock Switch:	As Specified

HW-203

Each pair to have:

3 Pair Hinges:	A8111, 4-1/2 x 4-1/2, BHMA 652
2 Closers:	C02011
2 Push Plates:	J300, flat, 8 x 16, BHMA 630
2 Overhead Stops:	C05541, BHMA 626

HW-204

Each pair to have:

3 Pair Hinges:	A8111, 4-1/2 x 4-1/2, BHMA 652
1 Lockset:	4000, F84, Grade 1, BHMA 626 (Active)
1 Set Flush Bolts:	L14081, BHMA 626 (Inactive)
2 Overhead Holders:	C05531, BHMA 626

Balance of hardware by door manufacturer.

HW-205

Each to have:

1-1/2 Pair Hinges:	A8111, 4-1/2 x 4-1/2, BHMA 652
1 Lockset:	4000, F84, Grade 1, BHMA 626
1 Overhead Stop:	C05541, BHMA 626

Balance of hardware by door manufacturer.

HW-206

Each pair to have:

4 Pair Hinges:	A8111, 5 x 4-1/2, NRP, BHMA 652
2 Closers:	C02011
2 Push Plates:	J300, flat, 8 x 16, BHMA 630
1 Dead Lock:	E2111, BHMA 626
1 Set Flush Bolts:	L84202, BHMA 652
2 Overhead Stops:	C05541, BHMA 626

DELETED

HW-207

Each to have:

1-1/2 Pair Hinges:	A8111, 5 x 4-1/2, NRP, BHMA 652
1 Hospital Latch:	As Specified, BHMA 626
1 Dead Lock:	E2111, BHMA 626
1 Smoke Closer:	As Specified
1 Stop:	L52101, BHMA 630

HW-208

Each to have:

1-1/2 Pair Hinges:	A8111, 5 x 4-1/2, NRP, BHMA 652
1 Lockset:	4000, F87, Grade 1, BHMA 626
1 Closer:	C02011
1 Overhead Stop:	C05541, BHMA 626
1 Viewer:	L23171

HW-209

Each to have:

2 Pair Hinges:	A8111, 5 x 4-1/2, NRP, BHMA 652
1 Hospital Latch:	As Specified, BHMA 626
1 Dead Lock:	E2111, BHMA 626
1 Closer:	C02011
1 Overhead Stop:	C05541, BHMA 626

HW-210

Each pair to have:

4 Pair Hinges:	A8111, 4-1/2 x 4-1/2, BHMA 652
1 Lockset:	4000, F84, Grade 1, BHMA 626 (Active)
1 Set Flush Bolts:	L14081, BHMA 626 (Inactive)
1 Closer:	C02011 (Active)
2 Overhead Stops:	C05541, BHMA 626

HW-211

Each pair to have:

3 Pair Hinges:	A8111, 4-1/2 x 4-1/2, BHMA 652
1 Hospital Latch:	As Specified, BHMA 626 (Active)
1 Dead Latch:	E2151, BHMA 626 (Active)
1 Set Flush Bolts:	L14081, BHMA 626 (Inactive)
1 Closer:	C02011
2 Overhead Stops:	C05541, BHMA 626
1 Intrusion Device:	As Specified (Active) (At Door C125A only)

HW-212

Each pair to have:

3 Pair Hinges:	A8412, 4-1/2, BHMA 652
1 Hospital Latch:	As Specified, BHMA 626 (Active)
1 Dead Latch:	E2151, BHMA 626 (Active)
1 Set Flush Bolts:	L14081, BHMA 626 (Inactive)
2 Closers:	C02011
2 Overhead Stops:	C05541, BHMA 626

HW-213

Each pair to have:

3 Pair Hinges:	A8111, 4-1/2 x 4-1/2, BHMA 652
1 Lockset:	4000, F84, Grade 1, BHMA 626 (Active)
1 Set Flush Bolts:	L14081, BHMA 626 (Inactive)
1 Closer:	C02011 (Active)
2 Overhead Stops:	C05541, BHMA 626

HW-214

Each to have:

2 Pair Hinges:	A8112, 4-1/2 x 4-1/2, BHMA 652
1 Lockset:	4000, F84, Grade 1, BHMA 626
1 Dutch Door Bolt:	Similar to L14151, BHMA 626
1 Overhead Holder:	C05531, BHMA 626
1 Floor Stop:	L12141, BHMA 626

HW-215

Each pair to have:

4 Pair Hinges:	A8412, 4-1/2, BHMA 652
1 Hospital Latch:	As Specified, BHMA 626 (Active)
1 Dead Lock:	E2151, BHMA 626 (Active)
1 Set Flush Bolts:	L14081, BHMA 626 (Inactive)
2 Closers:	C02011
2 Overhead Stops:	C05541, BHMA 626

HW-216

Each pair to have:

3 Pair Hinges:	A5111, 5 x 4, BHMA 630
1 Dead Lock:	E2151, BHMA 626 (Active)
1 Set Flush Bolts:	L14081, BHMA 626 (Inactive)

Balance of Hardware by section entitled "Automatic Operators"

HW-217

Each to have:

1-1/2 Pair Hinges:	A5111, 4-1/2 x 4-1/2, BHMA 630
1 Hospital Latch:	As Specified, BHMA 630
1 Dead Lock:	E2151, BHMA 630
1 Closer:	C02011
1 Overhead Stop:	C05541, BHMA 626

HW-218

Each to have:

2 Pair Hinges:	A8133, 4-1/2 x 4-1/2, BHMA 652
1 Lockset:	4000, F82, Grade 1, BHMA 626
1 Overhead Stop:	C05541, BHMA 626

HW-219

Each pair to have:

3 Pair Hinges:	A8411, 5, BHMA 652
2 Exit Devices:	Type 2, Function 01, Design as Specified
2 Smoke Closers:	As Specified

HW-220

Each pair to have:

3 Pair Hinges:	A8111, 5 x 4-1/2, BHMA 652
2 Push Plates:	J300, flat, 8 x 16, BHMA 630
2 Smoke Closers:	As Specified

HW-221

Each pair to have:

3 Pair Hinges:	A8411, 4-1/2, BHMA 652
2 Exit Devices:	Type 2, Function 08 (Less Lock), Design as specified
2 Smoke Closers:	As Specified
1 Door Coordinating Device:	As Specified

HW-222

Each pair to have:

3 Pair Hinges:	A8111, 4-1/2 x 4-1/2, BHMA 652
1 Dead Lock:	E2151, BHMA 626 (Active)
1 Set Flush Bolts:	L84202, BHMA 626 (Inactive)
2 Closers:	C02011
2 Push Plates:	J300, flat, 4 x 16, BHMA 630
2 Pulls:	J400, straight, with plate 4 x 16 BHMA 630
2 Overhead Stops:	C05541, BHMA 626

HW-223

Each to have:

2 Pair Hinges:	A8412, 4-1/2, BHMA 652
1 Lockset:	4000, F84, Grade 1, BHMA 626
1 Closer:	C02011
1 Overhead Stop:	C05541, BHMA 626

HW-224

Each pair to have:

3 Pair Hinges:	A8111, 5 x 4-1/2, BHMA 652
2 Closers:	C02011
2 Push Plates:	J300, flat, 8 x 16, BHMA 630
2 Overhead Stops:	C05541, BHMA 626

---END---

SECTION 08810. GLASS AND GLAZING

1. APPLICABLE PUBLICATIONS: The following publications of the issues listed below, but referred to thereafter by basic designation only, form a part of this specification to the extent indicated by the references thereto:

1.1 Federal Specifications:

DD-G-451D	Glass, Float or Plate, Sheet, Figured (Flat, for Glazing, Mirrors and Other Uses).
DD-G-1403B & Am 1	Glass, Plate, (Float), Sheet Figured, and Spandrel (Heat Strengthened and Fully Tempered).
DD-M-00411B & Am 1	Mirrors, Glass.
QQ-A-200/9C & Am 1	Aluminum Alloy Bar, Rod, Shapes and Tube, and Wire Extruded 6063.
TT-G-410E & Am 1	Glazing Compound, Sash (Metal) for Back Bedding and Face Glazing (Not for Channel or Stop Glazing).
TT-P-00791B & Am 2	Putty: Linseed-Oil Type, (for Wood Sash Glazing).
TT-S-00230C & Am 2	Sealing Compound; Elastomeric Type, Single Component (for Calking, Sealing, and Glazing in Buildings and Other Structures).

1.2 American Society for Testing and Materials (ASTM) Publications:

D673-70	Test for Mar Resistance of Plastics.

1.3 American National Standards Institute, Inc. (ANSI) Publication:

Z97.1-1972	Performance Specifications and Methods of Test for Transparent Safety Glazing Material Used in Buildings.

1.4 National Fire Protection Association (NFPA) Standard:

No. 80-1975	Fire Doors and Windows.

1.5 Flat Glass Marketing Association (FGMA) Publication:

Glazing Manual 1974 Edition.
Glazing Sealing Systems Manual (First Edition, 1970).

2. QUALITY CONTROL: Approvals, except those required for field installations, field applications, and field tests, shall be obtained before delivery of material or equipment to the project site.

3. SUBMITTALS:

3.1 Tests and Certificates: The testing requirements for materials incorporated in referenced documents will be waived provided the Contractor

submits certificates from the manufacturer stating that materials furnished for this project conform to all requirements of this specification and the referenced documents. Material certificates shall be submitted to and approved by the Contracting Officer.

3.1.1 Sample Certificate: The certificate shall not contain statements that could be interpreted to imply that the product does not meet all requirements specified, such as "as good as"; "achieve the same end use and results as materials formulated in accordance with the referenced specification"; "equal or exceed the service and performance of the specified material". The certificate should simply state that the product conforms to all requirements specified.

SAMPLE CERTIFICATE

The manufacturer hereby certifies that the following products being furnished for this project conform to all requirements of the project specifications and the respective reference specifications:

MANUFACTURER AND PRODUCT	REFERENCE SPECIFICATION
John Doe Company Glazing Compound	TT-G-410E

SIGNATURE AND TITLE

3.2 Catalog Data: Submit complete descriptive literature for each type of glass and glazing material and balcony guard rail system the Contractor proposes to use. Data which describe more than one type or item shall be clearly marked to indicate which type or item the Contractor intends to provide. Data shall be sufficient to show conformance to specified requirements.

3.3 Samples: One 10 x 12 inch factory labeled sample of each type and color of glass and glazing, one 12-inch long sample of balcony guard rail system glass retainer and one sample of each type of glazing accessory required for the project shall be submitted to and approved by the Contracting Officer before work is started.

3.4 Manufacturer's Installation Instructions: Submit manufacturer's printed installation instructions for each type of the following for approval:

Glass Setting Material	Insulating Glass	Tempered Glass
Heat-Absorbing Glass	Wire Glass	Plastic Glazing

3.5 Guarantee: Insulating glass units shall be guaranteed not to develop material obstruction to vision as a result of dust or film formation on the inner glass surfaces caused by failure of the hermetic seal, other than through glass breakage, within a ten-year period following installation. Any

units failing to comply with terms of this guarantee shall be replaced at no additional cost to the Government within 30 working days after receipt of notice from the Government.

3.6 Shop Drawings: Shop drawings on balcony guard rail system shall be submitted to and approved by the Contracting Officer. Drawings shall indicate elevators, full size sections, fastenings, anchors, and details of glass intersections.

4. DELIVERY AND STORAGE: Putty and glazing compounds shall be delivered to the site in unopened containers, labeled plainly with manufacturers' names and brands. Each light of glass shall bear the manufacturer's label showing type, thickness, and quality. Labels shall remain until glazing work has been approved. Glass and setting materials shall be stored in safe, dry locations and shall not be unpacked until needed for installation. Handling and installation of materials shall be in a manner that will prevent damage.

5. ENVIRONMENTAL CONDITIONS: Glazing work shall not be started until the outdoor temperature is above 40 degrees F on a rising thermometer, unless approved provisions are made to warm the glass and rabbet surfaces. Sufficient ventilation shall be provided to prevent condensation of moisture on glazing work during installation. Glazing work shall not be performed during damp or rainy weather.

6. MATERIALS: Glazing materials shall conform to the specifications listed and the requirements specified hereinafter.

6.1 Glass: Glass shall be provided in locations indicated and shall conform to the requirements of DD-G-451, unless otherwise specified. Thickness of glass shall be as indicated.

6.1.1 Plate or Float Glass: Plate or float glass shall be Type I, Class 1, Quality q3.

6.1.2 Wire Glass: Wire glass shall be Type II, Class 1, Form 1, Mesh M2, not less than 1/4 inch thick. Wire glass shall meet the impact test requirements of ANSI Z97.1. Wire glass shall conform to NFPA No. 80.

6.1.3 Tempered Clear Glass: Tempered clear glass shall conform to DD-G-1403, Kind FT, Condition A, Type I, Class 1, Quality q3.

6.1.4 Heat-Absorbing Glass: Heat-absorbing glass shall be Type I, Class 2, Style B, Quality q3, Gray in color.

6.1.5 Tempered Heat-Absorbing Glass: Tempered heat-absorbing glass shall conform to DD-G-1403, Kind FT, Condition A, Type I, Class 2, Style B, Quality q3, Gray in color.

6.1.6 Insulating Units: Insulating units shall be formed of two pieces of glass or plastic glazing, types as indicated, separated by a 1/2 inch dehydrated air space, hermetically sealed. The edges of units shall be encased in a stainless steel (or nonferrous) metal frame. Each unit shall be identified with the manufacturer's permanent label.

6.1.7 One-Way-Vision Glass: One-way-vision glass shall be Type I, Class 1, Quality q2, 1/4 inch thick, coated one face with a hard adherent film of chromium or other approved coating of proven equivalent durability. The glass shall transmit not less than 5 percent or more than 11 percent of total incident light in the visible region and shall reflect from the front surface of the coating not less than 45 percent of the total incident light in the visible region.

6.1.8 Lead Glass: Lead glass shall be as specified in section entitled "Radiation Protection".

6.2 Plastic Glazing: Plastic glazing shall be polycarbonate sheet, mar resistant grade, clear and gray transparent, thickness as indicated, guaranteed unbreakable for a period of three years from date of purchase and listed by U.L. as burglar resisting. Mar resistant sheets shall have a change in haze of 5 percent or less under Taber abrasion test with CS10F wheel, 500 grams, 100 cycles and a change in gloss of 5 percent or less under silicone carbon test, 1000 GM, ASTM D673. Plastic glazing shall be provided where indicated.

6.3 Setting Materials shall be suitable for the application and shall conform to the FGMA Glazing Sealing Systems Manual, except as otherwise specified herein.

6.3.1 Sealants: Non-skinning compounds and metal sash putty shall not be used. Materials used with aluminum shall not require painting, and shall match the color of adjacent surfaces. Material for vinyl gaskets shall be as recommended by glazing manufacturer for the particular condition.

(a) Wood sash, face glazed: Linseed-oil putty, TT-P-791.

(b) Wood sash, stop glazed: Sealant, TT-S-230, Type II, Class B.

(c) Metal sash, face glazed: Glazing compound, TT-G-410.

(d) Metal sash, stop glazed: Sealant, TT-S-230, Type II, Class B.

(e) Metal doors and frames: Resilient rubber or vinyl channels or preformed sealing tape, as recommended by the glass manufacturer.

6.3.2 Glazing Accessories, including glazing points, clips, shims, angles, beads, setting blocks, and spacer strips shall be provided as required to produce a complete installation. Ferrous metal which will be exposed shall have a finish that will not corrode or stain while in service.

6.4 Balcony Guard Rail System: System shall be made up of tempered glass panels set in continuous extruded aluminum anchors top and bottom. Top anchor shall be fabricated to receive wood cap rail. Total system shall be fabricated and installed so as to withstand 200 pounds, lateral loading at midspan of top rail.

6.4.1 Tempered Glass Panels: Tempered glass panels shall conform to DD-G-1403, Kind FT, Condition A, Type I, Class 1, Quality q_3. Glass Panels shall be 1/2 inch thick.

6.4.2 Extruded Aluminum Anchors: Continuous extruded aluminum anchors shall conform to QQ-A-200/9, alloy 6063-T5, mill finish.

6.4.3 Wood Cap Rail: Wood cap rail shall be provided under section entitled "Architectural Woodwork and Finish Carpentry".

6.5 Frameless Mirrors: Mirrors shall be electro-copper plated conforming to DD-M-00411, except sizes shall be as indicated and furnished without frame. Furnish mirrors with ground edges. Provide anchors of type recommended by the mirror manufacturer to safely support the weight of the mirror. Mirrors shall be provided where indicated.

7. INSTALLATION:

7.1 General: Glazing rabbets shall be rigid, true, properly primed, clean, dry, and dust free. Protective coatings shall be removed from metal rabbets with a solvent which will not stain or etch the metal. The sizes to provide the required edge clearances shall be determined by measuring the actual opening to receive the glass. All edges of glass that will be exposed in finish work shall be ground smooth. Labels shall be left in place until the installation is approved. Movable items shall be securely fixed, or in a closed and locked position until glazing compound has thoroughly set.

7.2 Glass Setting: Items to be glazed shall be either shop or field glazed using glass of the quality and thickness specified or indicated. Preparation of surrounds and glazing, unless otherwise specified or approved, shall be in conformance with the details and general conditions governing glazing in the FGMA Glazing Manual and Glazing Sealing Systems Manual, except that Setting No. 1 shall not be used. Aluminum windows and wood doors may be glazed in conformance with one of the glazing methods described in the standards under which they are produced, except face puttying method described in CS163 shall not be used. Glass for which the manufacturer's printed installation instructions are submitted and approved as specified shall be handled and installed in accordance with the manufacturer's instructions. Beads or stops which are furnished with the items to be glazed shall be used to secure the glass in place.

7.2.1 Sheet Glass: Glass shall be cut and set with the visible lines or waves running with horizontal dimensions.

7.2.2 Insulating Units: Units shall not have edges or corners ground, nipped, cut, or fitted after leaving the factory; shall not be subject to springing, forcing, or twisting during setting; and shall be handled so as not to strike setting frames or other objects.

7.2.3 Wire Glass: Glass for fire doors shall be installed in accordance with NFPA No. 80.

7.2.4 Heat-Absorbing Glass: Glass shall have clean, factory-cut edges. Do not field cut heat-absorbing glass.

7.3 Plastic Glazing: Conform to manufacturer's recommendations for edge clearance, type of sealant and tape and method of installation.

7.4 Balcony Guard Rail System: System shall be installed as indicated and in accordance with manufacturer's recommendations and approved shop drawings.

7.5 Frameless Mirrors: Install mirrors in accordance with manufacturer's recommendations.

7.6 Cleaning: Upon completion of the building, glass which is cracked, broken, defective, or improperly set shall be replaced with new at no additional cost to the Government. Glass surfaces shall be thoroughly cleaned with labels, paint spots, putty, and other defacement removed, and shall be clean at the time the work is accepted. Plastic glazing shall be cleaned in accordance with manufacturer's instructions.

---END---

SECTION 08850. TOTAL VISION GLAZING SYSTEM

1. APPLICABLE PUBLICATIONS: The following publications of the issues listed below, but referred to thereafter by basic designation only, form a part of this specification to the extent indicated by the references thereto:

1.1 Federal Specifications:

DD-G-451D	Glass, Float or Plate, Sheet, Figured, (Flat, for Glazing, Mirrors and Other Uses).
QQ-A-200/9C & Am 1	Aluminum Alloy Bar, Rod, Shapes and Tube, and Wire Extruded 6063.
QQ-A-250/2D	Aluminum Alloy, 3003, Plate and Strip.
QQ-A-250/8E	Aluminum Alloy, 5052, Plate and Strip.
QQ-A-250/11E	Aluminum Alloy, 6061, Plate and Strip.
TT-P-38D & Am 1	Paint, Aluminum, Ready-Mixed.
TT-P-645	Primer, Paint, Zinc-Chromate, Alkyd Type.
TT-S-001543A (COM-NBS)	Sealing Compound: Silicone Rubber Base (for Calking, Sealing, and Glazing in Buildings and Other Structures).

1.2 Military Specifications:

MIL-C-18480A & Am 3	Coating Compound, Bituminous Solvent, Coal Tar Base.

1.3 National Association of Architectural Metal Manufacturers (NAAMM):

Metal Finishes Manual (Finish Designation). (August 1969)

2. QUALITY CONTROL: Approvals, except those required for field installation, field application and field tests, shall be obtained before delivery of materials to the project site.

3. SUBMITTALS:

3.1 Materials Tests and Test Reports: The testing requirements for materials incorporated in referenced documents will be waived provided the manufacturer submits certificates stating that previously manufactured materials have been tested by recognized laboratories, that such materials meet testing requirements specified, and that the materials furnished for this project are of the same type, quality, manufacture and make as that tested. Material certificates shall be submitted to and approved by the Contracting Officer. Copies of other test reports need not be submitted except as specifically requested by the Contracting Officer.

3.2 Shop Drawings: Shop drawings for glazing system shall be submitted to and approved by the Contracting Officer before proceeding with fabrication. Shop drawings shall indicate elevations, structural gaskets, full-size

sections, thickness and gages of metal, fastenings, details of glass intersections, anchors, and system finish. Include a schedule showing location of units.

3.3 Descriptive Literature: Manufacturer's descriptive literature shall be furnished with shop drawings and shall consist of detail specifications and instructions for installation, adjustments, cleaning and maintenance.

3.4 Samples: All samples shall be submitted to and approved by the Contracting Officer before work is started.

3.4.1 Submit one 10 x 12 inch sample of each type of glass required.

3.4.2 Submit two 6 inch long samples of each aluminum extrusion with specified finish.

3.4.3 Glazing Gaskets: Submit two 12-inch long units.

3.4.4 Setting Blocks and Centering Shims: Submit 2 of each type.

3.4.5 Silicone Glazing Sealant: Submit 2 tubes.

4. DELIVERY AND STORAGE:

4.1 Protective Coating or Covering: Prior to shipment from the factory, finished surfaces of aluminum shall receive a protective coating or covering. Coating or covering shall not chip, peel, or flake due to temperature or weather and shall protect against discoloration and surface damage from transportation, storage, and construction activities. Coating or covering shall be readily removable without affecting the finish. Covering shall be either adhesive paper, waterproof tape or strippable plastic. Coating applied to aluminum shall be two sprayed-on coats or clear, water-white, nonyellowing, methacrylate lacquer to a total minimum thickness of 0.4 mil and maximum thickness of 0.6 mil.

4.2 Glass and Glazing Materials: Glazing compounds shall be delivered to the site in unopened containers, labeled plainly with manufacturer's names and brands. Each light of glass shall bear the manufacturer's label showing type, thickness and quality. Labels shall remain until glazing has been approved. Handling of materials shall be in a manner that will prevent damage.

4.3 Storage: Materials delivered to the site shall be inspected for damage, unloaded and stored with a minimum of handling. The storage spaces shall be in dry locations with adequate ventilation, free from dust, or water, and shall permit easy access for inspection and handling. Materials shall be stored on floors or platforms in a suitable and approved manner. Framing shall not be covered with tarps, polyethylene film, or similar type coverings, as trapped moisture can stain the metal. Glass and glazing materials shall not be unpacked until needed for installation.

5. ENVIRONMENTAL CONDITIONS: Glazing work shall not be started until the outdoor temperature is above 40 degrees F on a rising thermometer, unless approved provisions are made to warm the glass and rabbet surfaces. Sufficient ventilation shall be provided to prevent condensation of moisture on glazing work during installation. Glazing work shall not be performed during damp or rainy weather.

6. GENERAL DESCRIPTION: Total vision glazing system shall consist of extruded aluminum head and sill members of sizes and shapes indicated, with 3/4 inch thick vertical glass mullions and 3/8 inch thick glass vision panels. Glass shall be set in aluminum framing members with neoprene glazing gaskets and structural silicone sealant. Intersections between glass mullions and vision panels shall be sealed with structural silicone sealant.

7. MATERIALS:

7.1 Aluminum Framing: Aluminum shall consist of extruded shapes and sheet material. Extrusions shall comply with Specification QQ-A-200/9, alloy 6063-T5. Aluminum sheets and strips shall comply with Specification QQ-A-250/2, QQ-250/8 or QQ-A-250/11; alloy and temper best suited for the purpose and to provide a finish to match extrusions. Screws, nuts, washers, rivets, and other miscellaneous fastening devices shall be of hard aluminum or stainless steel.

7.2 Glass: Glass shall be clear annealed float glass conforming to Federal Specification DD-G-451, Type 1, Class 1, Quality q3.

7.3 Glazing Gaskets: Glazing gaskets shall be neoprene, formulated from the best available virgin materials, quality controlled to insure uniformity and compounded for optimum physical properties and function.

7.4 Setting Blocks and Centering Shims: Setting blocks and centering shims shall be virgin neoprene. Setting blocks shall have 70 to 90 durometer. Centering shims shall have 40 to 60 durometer.

7.5 Silicone Glazing Sealant: Sealant shall be one part silicone conforming to Federal Specification TT-S-001543.

7.6 Sealant Back-Up Material: Back-up material shall be closed cell polyethylene foam rods.

7.7 Sealant Primer: Primer shall be of type recommended by sealant manufacturer.

7.8 Aluminum Paint: Federal Specification TT-P-38.

7.9 Zinc Chromate Primer: Federal Specification TT-P-645.

7.10 Bituminous Paint: Military Specification MIL-C-18480.

7.11 Finish on Aluminum Surfaces: Finish for aluminum surfaces shall be AA-M10-C22-A42 black color anodized finish in accordance with the requirements of NAAMM's "Metal Finishes Manual". Color of surfaces shall match in appearance or fall between the two extremes of color range of the approved samples.

8. FABRICATION: Fabricate aluminum framing members with smooth, straight cut edges and tight-fitting joints. Exposed screws shall have heads countersunk flush with adjacent surfaces. Color of exposed fasteners shall match aluminum extrusions. Edges of glass mullions shall be polished.

9. INSTALLATION:

9.1 Aluminum Framing: Framing shall be set accurately in position, plumb, square, level and in alignment. Units shall be securely anchored as indicated and in accordance with approved shop drawings.

9.2 Glass: Glazing rabbets shall be rigid, true, properly primed, clean, dry and dust free. Protective coatings shall be removed from metal rabbets with a solvent which will not stain or etch the metal. The sizes to provide the required edge clearances shall be determined by measuring the actual opening to receive the glass. Labels shall be left in place until the installation is approved. Glass, glazing gaskets and sealant shall be installed in accordance with the glazing system manufacturer's instructions. Glass shall be temporarily braced and held in perfect alignment until sealant has thoroughly cured. Exposed surfaces of sealant shall be tooled or cut straight and flush with adjacent glass surfaces, with no visible sags.

9.3 Protection of Aluminum from Dissimilar Materials:

9.3.1 Dissimilar Metals: Where aluminum surfaces come in contact with metals other than stainless steel, zinc, or white bronze, aluminum surfaces shall be insulated from direct contact with incompatible metals by one or a combination of the following methods:

(a) Painting the dissimilar metal with one coat of heavy-bodied bituminous paint.

(b) Applying a synthetic butyl rubber calking material between the aluminum and the dissimilar metal.

(c) Painting the dissimilar metal with a prime coat of zinc-chromate primer, or other suitable primer, followed by one coat of aluminum paint or other suitable protective coating, excluding those containing lead pigmentation.

(d) Use of a nonabsorptive tape or gasket in permanently dry locations.

9.3.2 Drainage from Dissimilar Metals: Dissimilar metals used in locations where drainage from them passes over aluminum shall be painted as specified above, to prevent staining of aluminum.

9.3.3 Masonry and Concrete: Aluminum surfaces in contact with mortar, concrete, or other masonry materials shall be given one coat of heavy-bodied bituminous paint.

9.3.4 Wood: Aluminum surfaces in contact with wood or other similarly absorptive materials, which may become repeatedly wet, and aluminum surfaces in contact with treated wood, shall be given two coats of the aluminum paint or one coat of heavy-bodied bituminous paint. In lieu of painting the aluminum, the Contractor shall have the option of painting the wood and other absorptive surfaces with two coats of aluminum paint, and sealing the joints with calking compound.

9.4 Cleaning Aluminum: Upon completion of installation, metal surfaces shall be thoroughly cleaned, following the procedure recommended by the system manufacturer. Abrasive, caustic, or acid cleaning agents shall not be used.

9.5 Cleaning Glass: Upon completion of the building, glass which is cracked, broken, defective, or improperly set shall be replaced with new at no additional cost to the Government. Glass surfaces shall be thoroughly cleaned with labels, paint spots, putty, and other defacement removed, and shall be clean at the time the work is accepted.

9.6 Protection: During installation, units shall be protected from damage. Units and components that are damaged prior to completion and acceptance shall be restored to their original condition or new replacements shall be provided.

---END---

SECTION 08855. FLUSH GLAZING SYSTEM

1. APPLICABLE PUBLICATIONS: The following publications of the issues listed below, but referred to thereafter by basic designation only, form a part of this specification to the extent indicated by the references thereto:

1.1 Federal Specifications:

DD-G-1403B & Am 1	Glass, Plate, (Float), Sheet Figured, and Spandrel (Heat Strengthened and Fully Tempered).
QQ-A-200/9C & Am 1	Aluminum Alloy Bar, Rod, Shapes and Tube, and Wire Extruded 6063.
QQ-A-250/2D	Aluminum Alloy, 3003, Plate and Strip.
QQ-A-250/8E	Aluminum Alloy, 5052, Plate and Strip.
QQ-A-250/11E	Aluminum Alloy, 6061, Plate and Strip.
TT-P-38D & Am 1	Paint, Aluminum, Ready-Mixed.
TT-P-645	Primer, Paint, Zinc-Chromate, Alkyd Type.
TT-S-001543A (COM-NBS)	Sealing Compound: Silicone Rubber Base (for Calking, Sealing, and Glazing in Buildings and Other Structures).

1.2 Military Specifications:

MIL-C-18480A & Am 3	Coating Compound, Bituminous Solvent, Coal Tar Base.

1.3 National Association of Architectural Metal Manufacturers (NAAMM):

Metal Finishes Manual (Finish Designation). (August 1969)

2. QUALITY CONTROL: Approvals, except those required for field installation, field application and field tests, shall be obtained before delivery of materials to the project site.

3. SUBMITTALS:

3.1 Materials Tests and Test Reports: The testing requirements for materials incorporated in referenced documents will be waived provided the manufacturer submits certificates stating that previously manufactured materials have been tested by recognized laboratories, that such materials meet testing requirements specified, and that the materials furnished for this project are of the same type, quality, manufacture and make as that tested. Material certificates shall be submitted to and approved by the Contracting Officer. Copies of other test reports need not be submitted except as specifically requested by the Contracting Officer.

3.2 Shop Drawings: Shop drawings for glazing system shall be submitted to and approved by the Contracting Officer before proceeding with fabrication. Shop drawings shall indicate elevations, structural gaskets, full-size

sections, thickness and gages of metal, fastenings, details of glass intersections, anchors, and system finish. Include a schedule showing location of units.

3.3 Descriptive Literature: Manufacturer's descriptive literature shall be furnished with shop drawings and shall consist of detail specifications and instructions for installation, adjustments, cleaning and maintenance.

3.4 Samples: All samples shall be submitted to and approved by the Contracting Officer before work is started.

3.4.1 Submit one 10 x 12 inch sample of each type of glass required.

3.4.2 Submit two 6 inch long samples of each aluminum extrusion with specified finish.

3.4.3 Glazing Gaskets: Submit two 12-inch long units.

3.4.4 Setting Blocks and Centering Shims: Submit 2 of each type.

3.4.5 Silicone Glazing Sealant: Submit two tubes.

4. DELIVERY AND STORAGE:

4.1 Protective Coating or Covering: Prior to shipment from the factory, finished surfaces of aluminum shall receive a protective coating or covering. Coating or covering shall not chip, peel, or flake due to temperature or weather and shall protect against discoloration and surface damage from transportation, storage, and construction activities. Coating or covering shall be readily removable without affecting the finish. Covering shall be either adhesive paper, waterproof tape or strippable plastic. Coating applied to aluminum shall be two sprayed-on coats or clear, water-white, nonyellowing, methacrylate lacquer to a total minimum thickness of 0.4 mil and maximum thickness of 0.6 mil.

4.2 Glass and Glazing Materials: Glazing compounds shall be delivered to the site in unopened containers, labeled plainly with manufacturer's names and brands. Each light of glass shall bear the manufacturer's label showing type, thickness and quality. Labels shall remain until glazing has been approved. Handling of materials shall be in a manner that will prevent damage.

4.3 Storage: Materials delivered to the site shall be inspected for damage, unloaded and stored with a minimum of handling. The storage spaces shall be in dry locations with adequate ventilation, free from dust, or water, and shall permit easy access for inspection and handling. Materials shall be stored on floors or platforms in a suitable and approved manner. Framing shall not be covered with tarps, polyethylene film, or similar type coverings, as trapped moisture can stain the metal. Glass and glazing materials shall not be unpacked until needed for installation.

5. ENVIRONMENTAL CONDITIONS: Glazing work shall not be started until the outdoor temperature is above 40 degrees F on a rising thermometer, unless approved provisions are made to warm the glass and rabbet surfaces. Sufficient ventilation shall be provided to prevent condensation of moisture on glazing work during installation. Glazing work shall not be performed during damp or rainy weather.

6. GENERAL DESCRIPTION: Flush glazing system shall consist of extruded aluminum head and sill members of sizes and shapes indicated and 1/2 inch thick tempered glass. Glass shall be set in aluminum framing members with neoprene glazing gaskets and structural silicone sealant. Silicone sealant shall be used to seal butt joints between glass, and to adhere glass to vertical wood framing mambers. Vertical wood framing members are specified in section entitled "Architectural Woodwork and Finish Carpentry".

7. MATERIALS:

7.1 Aluminum Framing: Aluminum shall consist of extruded shapes and sheet material. Extrusions shall comply with Specification QQ-A-200/9, alloy 6063-T5. Aluminum sheets and strips shall comply with Specification QQ-A-250/2, QQ-250/8 or QQ-A-250/11; alloy and temper best suited for the purpose and to provide a finish to match extrusions. Screws, nuts, washers, rivets, and other miscellaneous fastening devices shall be of hard aluminum or stainless steel.

7.2 Glass: Glass shall be tempered clear glass conforming to Federal Specification DD-G-1403, Kind FT, Condition A, Type 1, Class 1, Quality q3.

7.3 Glazing Gaskets: Glazing gaskets shall be neoprene, formulated from the best available virgin materials, quality controlled to insure uniformity and compounded for optimum physical properties and function.

7.4 Setting Blocks and Centering Shims: Setting blocks and centering shims shall be virgin neoprene. Setting blocks shall have 70 to 90 durometer. Centering shims shall have 40 to 60 durometer.

7.5 Silicone Glazing Sealant: Sealant shall be one part silicone conforming to Federal Specification TT-S-001543.

7.6 Sealant Back-Up Material: Back-up material shall be closed cell polyethylene foam rods.

7.7 Sealant Primer: Primer shall be of type recommended by sealant manufacturer.

7.8 Aluminum Paint: Federal Specification TT-P-38.

7.9 Zinc Chromate Primer: Federal Specification TT-P-645.

7.10 Bituminous Paint: Military Specification MIL-C-18480.

7.11 Finish on Aluminum Surfaces: Finish for aluminum surfaces shall be AA-M10-C22-A42 black color anodized finish in accordance with the requirements of NAAMM's "Metal Finishes Manual". Color of surfaces shall match in appearance or fall between the two extremes of color range of the approved samples.

8. FABRICATION: Fabricate aluminum framing members with smooth, straight cut edges and tight-fitting joints. Exposed screws shall have heads countersunk flush with adjacent surfaces. Color of exposed fasteners shall match aluminum extrusions.

9. INSTALLATION:

9.1 Aluminum Framing: Framing shall be set accurately in position, plumb, square, level and in alignment. Units shall be securely anchored as indicated and in accordance with approved shop drawings.

9.2 Glass: Glazing rabbets shall be rigid, true, properly primed, clean, dry and dust free. Protective coatings shall be removed from metal rabbets with a solvent which will not stain or etch the metal. The sizes to provide the required edge clearances shall be determined by measuring the actual opening to receive the glass. Labels shall be left in place until the installation is approved. Glass, glazing gaskets and sealant shall be installed in accordance with the glazing system manufacturer's instructions. Glass shall be temporarily braced and held in perfect alignment until sealant has thoroughly cured. Exposed surfaces of sealant shall be tooled or cut straight and flush with adjacent glass surfaces, with no visible sags. Glass shall have clean, factory-cut edges. Do not field cut glass.

9.3 Protection of Aluminum from Dissimilar Materials:

9.3.1 Dissimilar Metals: Where aluminum surfaces come in contact with metals other than stainless steel, zinc, or white bronze, aluminum surfaces shall be insulated from direct contact with incompatible metals by one or a combination of the following methods:

(a) Painting the dissimilar metal with one coat of heavy-bodied bituminous paint.

(b) Applying a synthetic butyl rubber calking material between the aluminum and the dissimilar metal.

(c) Painting the dissimilar metal with a prime coat of zinc-chromate primer, or other suitable primer, followed by one coat of aluminum paint or other suitable protective coating, excluding those containing lead pigmentation.

(d) Use of a nonabsorptive tape or gasket in permanently dry locations.

9.3.2 Drainage from Dissimilar Metals: Dissimilar metals used in locations where drainage from them passes over aluminum shall be painted as specified above, to prevent staining of aluminum.

9.3.3 Masonry and Concrete: Aluminum surfaces in contact with mortar, concrete, or other masonry materials shall be given one coat of heavy-bodied bituminous paint.

9.3.4 Wood: Aluminum surfaces in contact with wood or other similarly absorptive materials, which may become repeatedly wet, and aluminum surfaces in contact with treated wood, shall be given two coats of the aluminum paint or one coat of heavy-bodied bituminous paint. In lieu of painting the aluminum, the Contractor shall have the option of painting the wood and other absorptive surfaces with two coats of aluminum paint, and sealing the joints with calking compound.

9.4 Cleaning Aluminum: Upon completion of installation, metal surfaces shall be thoroughly cleaned, following the procedure recommended by the system manufacturer. Abrasive, caustic, or acid cleaning agents shall not be used.

9.5 Cleaning Glass: Upon completion of the building, glass which is cracked, broken, defective, or improperly set shall be replaced with new at no additional cost to the Government. Glass surfaces shall be thoroughly cleaned with labels, paint spots, putty, and other defacement removed, and shall be clean at the time the work is accepted.

9.6 Protection: During installation, units shall be protected from damage. Units and components that are damaged prior to completion and acceptance shall be restored to their original condition or new replacements shall be provided.

---END---

SECTION 09101. METAL LATHING

1. APPLICABLE PUBLICATIONS: The following publications of the issues listed below, but referred to thereafter by basic designation only, form a part of this specification to the extent indicated by the references thereto:

1.1 American National Standards Institute (ANSI):

A42.3-1971	Lathing and Furring for Portland Cement and Portland Cement-Lime Plastering, Exterior (Stucco) and Interior.
A42.4-1967	Interior Lathing and Furring.

2. QUALITY CONTROL: Approvals, except those required for field installations, field applications and field tests, shall be obtained before delivery of materials or equipment to the project site.

3. SUBMITTALS:

3.1 Materials Tests and Test Reports: The testing requirements for materials incorporated in referenced documents will be waived provided the manufacturer submits certificates stating that previously manufactured materials have been tested by recognized laboratories, that such materials meet testing requirements specified, and that the materials furnished for this project are of the same type, quality, manufacture and make as that tested. Copies of the test reports need not be submitted except as specifically requested by the Contracting Officer.

3.2 Product Data: Catalog cuts on lathing materials and accessories shall be submitted and approved before delivery of any materials to the site. Data shall show types, weights, thicknesses, finishes and locations of each item proposed for use in this project.

4. DELIVERY AND STORAGE: All materials shall be stored in a dry location, free from water, and in a manner to permit easy access for inspection and handling. Material shall be handled so as to prevent damage. Damaged items that cannot be restored to like-new condition shall be replaced at no additional cost to the Government.

5. GENERAL: The work includes metal lathing and shall include all tie wires, fastenings, metal screeds, beads, and other accessories necessary for a complete installation. The work shall be built plumb and true, without waves or buckles, shall be rigid, and all members shall be fastened securely together and to the walls, floors, and other structural supports. Materials and their installation shall conform to ANSI A42.4 for gypsum plaster and ANSI A42.3 for Portland cement plaster and stucco, except as indicated or specified otherwise. Metal framing, furring, and ceiling suspension system are specified in other sections.

6. MATERIALS:

6.1 Metal Lath: Metal lathing shall be provided as a plaster base where indicated for plastered walls, ceilings and soffits. Lath shall weigh 3.4 pounds per square yard, and shall conform to the applicable requirements of ANSI A42.3 and ANSI A42.4. Lath shall be galvanized.

6.2 Plaster Beads: Metal casing beads, corner beads and base screeds shall be provided around the periphery of unrestrained plaster ceilings, where unrestrained ceilings intersect the surfaces of the walls, partitions, beams, and columns; and at the edge of plaster which abuts or adjoins an unplastered surface. Metal plaster reveal mouldings, vented and non vented, shall be extruded from 6063-T5 aluminum and shall have a baked on black acrylic coating.

6.3 Expansion Joints: Expansion joints shall be provided in plaster assemblies where indicated, where specified, and where expansion joints occur in the structural walls or ceiling. They shall be "W" shaped grounds of zinc-coated steel, not lighter than 26 gage, and shall be an approved type, with perforated or expanded metal flanges.

7. INSTALLATION:

7.1 Metal Lath: Metal lath and accessories shall be installed in accordance with ANSI A42.3 for Portland cement plaster and stucco, and ANSI A42.4 for gypsum plaster, unless otherwise indicated or specified.

7.2 Accessories: Lath shall terminate at each side of expansion joints. Casing beads at edges of unrestrained ceilings shall be placed to provide 1/4 gap at adjacent vertical surfaces; and joint shall be calked; cornerite shall not be used at such intersections. Install metal plaster reveal mouldings where indicated and in accordance with moulding manufacturer's directions.

7.3 Unrestrained Ceilings: All ceilings to receive Portland cement plaster and stucco shall be unrestrained. Panels created by installation of expansion joints shall not exceed 144 square feet with no dimension exceeding 12 feet and a length to width ratio of not more than 2-1/2 to 1. The ceiling lath and plaster of unrestrained ceilings shall be isolated from intersecting vertical surfaces with casing beads.

---END---

SECTION 09150. PLASTERING AND STUCCOING

1. APPLICABLE PUBLICATIONS: The following publications of the issues listed below, but referred to elsewhere by basic designation only, form a part of this specification to the extent indicated by the references thereto:

1.1 American National Standards Institute (ANSI) Publications:

A42.1-1964	Gypsum Plastering.
A42.2-1971	Portland Cement and Portland Cement-Lime Plastering, Exterior (Stucco) and Interior.
A42.3-1971	Lathing and Furring for Portland Cement and Portland Cement-Lime Plastering Exterior (Stucco) and Interior.
A42.4-1967	Interior Lathing and Furring.

1.2 American Society for Testing and Materials (ASTM):

C28-76a	Gypsum Plasters.
ASTM C206-76	Finishing Hydrated Lime.
ASTM C207-76	Hydrated Lime for Masonry Purposes.
C472-73	Physical Testing of Gypsum Plasters and Gypsum Concrete.

2. QUALITY CONTROL: Approvals, except those required for field installations, field applications, and field tests, shall be obtained before delivery of materials or equipment to the project site.

3. SUBMITTALS:

3.1 Test Reports and Certificates: The testing requirements incorporated in referenced documents will be waived provided the manufacturer submits certificates that previously manufactured materials have been tested by recognized laboratories, that such materials meet testing requirements specified and that the tested materials is of the same type, quality, manufacture, and make as that furnished for this project. Copies of the test reports need not be submitted except as specifically requested.

3.2 Samples: A 12 inch square sample panel of each specified finish shall be submitted for approval before the work is started. Sample panels shall show the texture for plaster and texture for stucco. Approved sample panels shall be erected at the building site. Finished plaster and stucco work shall match the approved sample panels.

4. DELIVERY AND STORAGE: Manufactured materials shall be delivered in the manufacturer's original unbroken packages or containers which are labeled plainly with the manufacturer's names and brands. Cementitious materials shall be kept dry until ready to be used; they shall be stored off the ground, under cover, and away from sweating walls and other damp surfaces.

5. GENERAL:

5.1 Definitions: The words "stucco" and "stuccoing" as used herein refer to Portland cement plaster used on the exterior of the building. The words "plaster" and "plastering" refer to Portland cement plaster and gypsum plaster used on the interior of the building.

5.2 Gypsum Plaster: All gypsum plastering work shall conform to the requirements of ANSI A42.1, unless otherwise specified herein. Gypsum plaster shall be applied to concrete stair in Lobby of Area B, and elsewhere as indicated.

5.3 Cement Plaster: All Portland cement plastering and stuccoing work shall conform to the requirements of ANSI A42.2, unless otherwise specified herein.

5.4 Lathing: Metal lathing, metal accessories, cornerite, and their installation shall conform to ANSI A42.3 for Portland cement plaster and stucco work, to ANSI A42.4 for gypsum plaster, and section entitled: "Metal Lathing".

6. ENVIRONMENTAL CONDITIONS:

6.1 Gypsum Plaster: A uniform temperature of not less than 55 degrees F shall be maintained continuously in the areas to be plastered. This uniform temperature shall be maintained for not less than one week prior to the application of plaster, while the plastering is being done, while the plaster is drying, and after the plaster is dry until normal occupancy heating conditions are established. Heat shall be well distributed in all areas. Properly regulated ventilation shall be provided to prevent "sweat-outs" or "dry-outs". When the building is exposed to hot dry winds or day-to-night temperature differentials of 20 degrees F or more, openings that are not glazed shall be covered in an approved manner. Proper permanent ventilation shall be provided for spaces enclosed by suspended ceilings as indicated.

6.2 Portland Cement-lime Plaster and Stucco: An ambient temperature of not less than 40 degrees F shall be maintained continuously where plastering and stuccoing work will be done. This temperature shall be maintained for not less than 48 hours prior to the application of plaster and stucco, while the plastering and stuccoing is being done and during the curing operation. In interior plastering work, heat within the building shall be maintained until normal occupancy conditions are established. When the building is exposed to hot, dry winds or day-to-night temperature differentials of 20 degrees F or more, openings that are not glazed shall be covered in an approved manner.

7. MATERIALS:

7.1 Cement: Natural gray Portland cement.

7.2 Sand:

7.2.1 For Stucco: ANSI A42.2.

7.2.2 Gypsum Plaster: ANSI A42.1.

7.3 Hydrated Lime:

7.3.1 For Stucco: ASTM C206, Type S.

7.3.2 For Gypsum Plaster: ASTM C207, Type S.

7.4 High Strength Gypsum Plaster:

7.4.1 Basecoat: ASTM C28, equal to US Gypsum's Structo-Base Gypsum Plaster (gypsum neat plaster), except plaster shall have a compressive strength of not less than 2,500 psi when tested dry in accordance with ASTM C472.

7.4.2 Finish Coat: ASTM C28, equal to US Gypsum's Structo-Gauge Gauging Plaster (gypsum gauging plaster), except plaster shall have a compressive strength of not less than 5,000 psi when tested dry in accordance with ASTM C472.

7.5 Accessories: Metal lath, accessories and cornerite shall be galvanized, except provide zinc alloy accessories for stucco. Where plaster abuts unplastered construction and openings, metal casing beads shall be provided.

8. PROPORTIONING AND MIXING: Proportioning and mixing shall conform to ANSI A42.2 for Portland cement plaster and stucco. The gypsum basecoat plaster shall be mixed in the proportions of one part gypsum basecoat plaster to 2 parts sand; the gypsum finish coat shall be mixed in the proportions of one part gypsum finish coat plaster to 1-1/2 parts of lime; and mix materials in accordance with ANSI A42.1, unless otherwise directed by materials manufacturer. Materials which are specified on a volume basis shall be measured in approved containers, which will insure that the specified proportions will be controlled and accurately maintained during the progress of the work. Measuring materials with shovels "shovel count" will not be permitted. Ready-mix plaster and stucco shall be prepared for use by the addition of water only.

9. APPLICATION:

9.1 Preparation of Surfaces: Surfaces to which plaster or stucco is to be applied shall be cleaned of all projections, dust, loose particles, grease, bond breakers, and other foreign matter and shall be sufficiently rough to provide a strong mechanical bond. Plaster and stucco shall not be applied directly to (a) surfaces of concrete that have been coated with bituminous compound or other waterproofing agents, or (b) to surfaces that have been

painted or previously plastered. Metal grounds, corner beads, screeds, and other accessories shall be provided at all edges and corners of stucco and plaster and shall be checked carefully for alignment before the work is started. Plaster or stucco shall not be applied to surfaces containing frost. Expansion and control joints shall be provided as indicated and as required by ANSI A42.2 for Portland cement plaster and stucco, and ANSI A42.1 for gypsum plaster.

9.2 Plaster and Stucco: Apply Portland cement plaster and stucco in accordance with ANSI A42.2 providing a 3 coat work on metal lath. Apply gypsum plaster in accordance with ANSI A42.1 providing a 2 coat work on concrete and a 3 coat work on metal lath. Apply bonding agent to concrete surfaces before application of gypsum plaster.

9.3 Scratch Coat for Tile: Portland cement scratch coat shall be applied and allowed to dry slowly for not less than 24 hours before tile is to be set. Scratch coat shall be applied in the thickness indicated or as necessary to bring the face of the tile to the required plane, but not less than 1/4 inch from the face of the material it is being applied to and shall have a level surface within a tolerance of 1/4 inch in 8 feet. Scratch coat shall be applied after substantial grounds, plugs, hangers, and other such accessories have been installed for plumbing fixtures, electrical outlets and other fixtures and fittings that are to be secured to tiled surfaces. Scratch coat shall be applied with sufficient pressure to insure a proper bond and key with the base and a proper base for the setting bed. While the mortar is still plastic, the scratch coat shall be cut with a trowel at all internal vertical angles for the depth of the coat and the full height of the tile bed, and shall be scored horizontally or cross-scratched on one-inch centers for the extent of the tile bed. Mortar for scratch coats shall be protected and kept moist during curing period. A leveling coat of the same mix specified for the scratch coat shall be applied over scratch coat when the surface of the scratch coat is not level within the specified tolerance or when a base coat thickness of more than 3/4 inch is required. Leveling coat shall be scratched and cured for 24 hours.

9.4 Curing: Portland cement plaster and stucco shall be cured using a fine fog spray of water applied to the finish coat as frequently as required to prevent dry-out of the plaster or stucco. The surfaces shall not be saturated to the point where free water stands on the surface. Care shall be taken to prevent staining of the finish coat.

10. FINISHES:

10.1 Gypsum Plaster: Finish shall be a Gypsum Trowel finish conforming to ANSI A42.1.

10.2 Portland Cement Plaster And Stucco Finish:

10.2.1 Sand Float Finish: Finish coat shall be devoid of coarse aggregate and shall be floated to a true plane and fine textured finish.

11. PATCHING:

11.1 New Plaster and Stucco: Upon completion of the building, loose, cracked, damaged, or defective plaster and stucco shall be cut out and patched. Patching shall match existing work in texture, color and finish and shall finish flush with plaster and stucco previously applied. All pointing and patching of plastered and stuccoed surfaces, and stucco and plaster work abutting or adjoining any other finish work, shall be done in a neat and workmanlike manner. Plaster and stucco droppings or spatterings shall be removed from all surfaces. Exposed plastered and stuccoed surfaces shall be left in a clean, unblemished condition ready to receive paint or other finish. Protective covering shall be removed from floors and other surfaces, and all rubbish and debris shall be removed from the building.

---END---

SECTION 09161. VENEER PLASTER

1. APPLICABLE PUBLICATIONS: The following publications of the issues listed below, but referred to thereafter by basic designation only, form a part of this specification to the extent indicated by the references thereto:

1.1 American Society for Testing and Materials (ASTM) Publications:

C28-76a	Gypsum Plasters.
C206-76	Finishing Hydrated Lime.
C587-68(1973)	Gypsum Veneer Plaster.
C588-76	Gypsum Base for Veneer Plasters.
C646-76a	Steel Drill Screws for the Application of Gypsum Sheet Material to Light-gage Steel Studs.
E90-75	Airborne-Sound Transmission Loss of Building Partitions, Laboratory Measurement of.
E413-73	Sound Transmission Class. Classification for Determination of.

1.2 Underwriters' Laboratories, Inc. (UL) Publication:

1978	Fire Resistive Index.

2. QUALITY CONTROL: Approvals, except those required for field installation, field application and field tests, shall be obtained before delivery of materials to the project site.

3. SUBMITTALS:

3.1 Tests and Certificates: The testing requirements for materials incorporated in referenced documents will be waived provided the Contractor submits certificates from the manufacturer stating that materials furnished for this project conform to all requirements of this specification and the referenced documents. Material certificates shall be submitted to and approved by the Contracting Officer. Copies of the test reports for fire-resistive assemblies and sound rated assemblies shall be submitted to and approved by the Contracting Officer before work is started. Copies of other test reports need not be submitted except as specifically requested by the Contracting Officer.

3.1.1 Sample Certificate: The certificate shall not contain statements that could be interpreted to imply that the product does not meet all requirements specified, such as "as good as"; "achieve the same end use and results as materials formulated in accordance with the referenced specification"; "equal or exceed the service and performance of the specified material". The certificate should simply state that the product conforms to all requirements specified.

SAMPLE CERTIFICATE

The manufacturer hereby certifies that all following products being furnished for this project conform to all requirements of the project specifications and the respective reference specifications:

MANUFACTURER AND PRODUCT	REFERENCE SPECIFICATION
John Doe Company Veneer Plaster Base	ASTM C588

SIGNATURE AND TITLE

3.2 Samples: The following samples shall be submitted to and approved by the Contracting Officer before work is started:

(a) Veneer Plaster Base: Two units, 12 inches square.

(b) Veneer Plaster Basecoat: One Quart.

(c) Veneer Plaster Finish Coat: One Quart.

(d) Screws: Two of each type.

(e) Joint Reinforcement: Two of each type.

(f) Accessories: Two of each type.

(g) Acoustical Sealant: One tube.

3.3 Shop Drawings: Shop drawings shall be submitted to and approved by the Contracting Officer before work is started. Shop drawings shall indicate fire-resistive ratings; sound ratings; location and type of fasteners; elevations and details at doors, corners, partition intersections, ceilings and joints; location of all expansion and control joints; and other details of construction.

3.4 Manufacturer's Catalog Literature and Data: Manufacturer's catalog literature and data on veneer plastering materials shall be submitted to and approved by the Contracting Officer before work is started.

4. DELIVERY AND PROTECTION OF MATERIALS: All manufactured materials shall be delivered in the original packages, containers, or cartons bearing the brand name and manufacturer identification. The surfaces of veneer plaster base shall be protected from direct sunlight in storage and shall be plastered as soon as possible after application. Veneer plaster base shall be neatly stacked flat to avoid sagging or damage to edges, ends or surfaces. Veneer plaster base and veneer plaster shall be kept dry, off the ground, under cover, away from sweating walls and other damp surfaces.

5. FIRE-RESISTIVE ASSEMBLIES: Wherever fire rated veneer plaster construction is indicated, all materials, methods, and installation, including types and spacing of fasteners, shall be in accordance with the specifications of the following testing agencies to provide the fire ratings indicated.

(a) Underwriters' Laboratories, Inc.'s "Fire Resistive Index" for the UL design numbers indicated.

(b) University of Ohio's published test reports for the test numbers indicated.

6. SOUND RATED ASSEMBLIES: Veneer plaster construction shall conform to the performance requirements of ASTM E90 and ASTM E413 for indicated STC ratings.

7. MATERIALS:

7.1 Veneer Plaster Base: Veneer plaster base shall be Type X conforming to ASTM C588. Provide base 48 inches wide and in lengths as long as practical to minimize number of joints.

7.2 Plastering Materials:

7.2.1 Basecoat: Veneer plaster basecoat shall conform to ASTM C587, equal to US Gypsum's Imperial Basecoat, having a minimum compressive strength of 3,000 psi. Formulated for hand or machine application; Contractor's option.

7.2.2 Finish Coat: Veneer plaster finish coat shall conform to ASTM C28, gauging plaster, equal to US Gypsum's Structo-Gauge Gauging Plaster, having a minimum compressive strength of 5,000 psi, neat.

7.2.3 Lime: ASTM C206, Type S.

7.2.4 Water: Clean, fresh, and potable.

7.3 Screws: Screws shall conform to ASTM C646, length as recommended by veneer plaster base manufacturer.

7.4 Joint Reinforcement: Joint reinforcement shall be glass fiber mesh tape with pressure sensitive adhesive back; minimum width of 2-1/2 inches, providing sufficient strength to meet the joint strength requirements of ASTM C587.

7.5 Accessories: Cornerbead, edge trim, casing beads, and control joints shall be made of galvanized steel, or zinc alloy of suitable thickness and design for the intended use and shall have an expanded flange. Flanges shall be free from dirt or grease or other materials that may affect the bond of veneer plaster.

7.6 Acoustical Sealant: Type recommended by veneer plaster manufacturer to provide STC ratings indicated.

8. GENERAL REQUIREMENTS FOR INSTALLATION: Install all materials in accordance with manufacturer's recommendations and the following requirements, except fire-resistive assemblies and sound rated assemblies shall be installed to provide the fire resistive ratings and sound ratings indicated.

9. INSTALLATION OF VENEER PLASTER BASE: Apply veneer plaster base with long dimension parallel to vertical framing members, no end joints allowed at walls. Apply veneer plaster base of maximum practical length face down with long dimension perpendicular to framing members at ceilings. All ends and edges shall occur over framing members or other solid backing, except where treated joints occur at right angles to framing or furring members. On ceilings, end joints shall be staggered. Joints on opposite sides of a partition shall be arranged to occur on different framing members. Veneer plaster base shall be applied first to the ceiling and then to the walls. All cut edges and ends of the veneer plaster base shall be smoothed where necessary to obtain a joint gap of not more than 1/16 inch. Cutouts for pipes, fixtures, or other small openings shall be scored on the face and back in outline before removal or shall be cut out with a saw or other suitable tool. Where meeting projecting surfaces, veneer plaster base shall be scribed and cut to provide a gap not to exceed 1/16 inch. The veneer plaster base shall be held in firm contact with the underlying support while driving fasteners. Screws shall be spaced 12 inches on centers. Application of fasteners shall proceed from the center of the field of the base to the ends and edges. Fasteners shall be spaced not less than 3/8 inch nor more than 1/2 inch from edges and ends of veneer plaster base. Perimeter fastening into partition plate or sole at the top and bottom shall be required. Screws shall be driven by a mechanical tool with a special head to provide screwhead penetration just below the veneer plaster base surface without breaking the surface paper around perimeter of screwhead or stripping the framing member around the screw.

10. INSTALLATION OF ACCESSORIES: Corner beads shall be installed at all external angles, set tight against veneer plaster base and anchored with staples. All other accessories shall be attached with staples spaced not to exceed 12 inch intervals. Accessories, including expansion and control joints, shall be installed in locations indicated or as recommended by the manufacturer.

11. PREPARATIONS FOR PLASTERING:

11.1 Temperature: A uniform temperature of not less than 50 degrees F and not more than 85 degrees F shall be continuously maintained in the building for a period of not less than one week prior to, while plastering is in progress, and for a period of at least one week after plaster is set. Heat shall be well distributed in all areas by screens or barriers to prevent concentrated or uneven heat on plaster near the heat source.

11.2 Ventilation: Ventilation shall be provided to exhaust moist air to the outside during plaster application and set and, until plaster is dry. In glazed areas, keep windows open top and bottom or side to side 3 to 4 inches. Openings can be reduced in cold weather. For enclosed areas lacking natural ventilation provide temporary mechanical means for ventilation. In unglazed areas subjected to hot, dry winds or temperature differentials from day to night of 20 degrees F or more, screen openings with cheesecloth or similar materials. Avoid rapid drying. During periods of low indoor humidity provide minimum air circulation following plastering and until plaster is dry.

11.3 Examination: All surfaces including, but not limited to veneer plaster base and accessories to receive veneer plaster shall be carefully examined before the veneer plaster is applied. Report all unsatisfactory conditions. Veneer plaster shall not be applied until such unsatisfactory conditions are rectified and made suitable for the application of veneer plaster. Commencement of work constitutes acceptance of surfaces. Accessories, such as corner beads, control joints, casing beads, and edge trim shall be examined to assure they are straight, plumb, level, square, or true to the required angles, as the case may require, and applied in a manner to ensure full coverage of flanges, before plaster is applied.

12. VENEER BASE JOINT REINFORCEMENT: All interior angles and flat joints shall be reinforced prior to application of veneer plaster over the field of the base. Reinforcement shall not overlap at intersections.

12.1 Interior Angles: Position and secure strip reinforcement with veneer plaster or self-adhering reinforcement. Where securing reinforcement with veneer plaster, reinforcement must be thoroughly embedded so that plaster is both under and covering reinforcement.

12.2 Flat Joints: Use one of the following methods:

(a) Place reinforcement over joint line and tightly trowel plaster over reinforcement along the joint line to provide thorough embedment. Allow embedment plaster to set prior to applying field plaster, or

(b) Tightly trowel embedment material to a depth of about 1/32 inch, working trowel in both directions along joint line. Center reinforcement over joint line. Firmly and evenly press strip reinforcement into soft embedment material using a little soft material on the trowel to bury it completely, and leave embedment material feathered out to a width of about 6 inches flush with face of base. Allow embedment material to set before proceeding with field plastering.

13. MIXING: Material that has partially set shall not be retempered or used. Frozen, caked, or lumpy material shall not be used. Each batch shall be mixed separately. Mixers shall be thoroughly cleaned after each batch so as not to accelerate following batches. Mix veneer plaster basecoat in accordance with manufacturer's directions. Veneer plaster finish coat shall be mixed in the proportions of one part veneer plaster finish coat gauging

plaster to 1-1/2 parts lime (dry weight) in accordance with manufacturer's directions. Water ratios and other techniques used for mixing shall conform to the manufacturers' recommendations for specific veneer plaster products.

14. PLASTERING: Plaster thickness shall be measured from the face of the base to which it is applied exclusive of joint treatment. Basecoat, either trowel or spray applied, shall have a thickness of 1/16 inch to 3/32 inch minimum to completely cover joint reinforcement. Finish coat shall have a thickness of 1/16 inch minimum.

14.1 Basecoat: Apply basecoat by hand application method or machine application method; Contractor's option.

14.1.1 Hand Application: Basecoat shall be applied with sufficient material and pressure to provide good bond on veneer plaster base and straightened to a true surface without application of water. Surface shall be left sufficiently rough to provide mechanical key for finish coat.

14.1.2 Machine Application: First, spray flat joint, beads, and interior angles, and work material by hand tools to cover reinforcement, fill beads, straighten angles, and feather out plaster over joints. Proceed with full areas by spraying with a broad sweeping motion holding nozzle close enough to surface to avoid excessive overspray and build-up angles. First apply a light coating while moving in one direction; then immediately double back over the same area, sweeping nozzle in the opposite direction to obtain a level coat which requires no further working, and is suitable to receive the finish coat on setting.

14.2 Finish Coat: Finish coat may be applied over "green", partially dry, or dry basecoat. Application of finish over basecoat which is damp on joints and dry in field of base may result in "photographing" of joints and should be avoided. Plaster shall be applied by trowelling in with firm pressure, then doubling back and filling out to a true, even surface. After plaster has become firm, it shall be well trowelled with a minimum amount of water to a smooth finish, free from cat-faces, blisters, trowel marks, blemishes or other imperfections.

15. SEALANT APPLICATION: Install acoustical sealant to provide the STC ratings indicated. Apply sealant as recommended by the manufacturer, filling all cut-outs, openings, voids at floor and ceiling where partitions abut to dissimilar construction, and elsewhere to provide the required sound ratings.

16. PATCHING: Defects and damage work shall be corrected as required to leave surfaces smooth, uniform in appearance, and ready to receive finish as specified in another section. All repair work shall be performed at no additional expense to the Government.

---END---

SECTION 09250. GYPSUM WALLBOARD

1. APPLICABLE PUBLICATIONS: The following publications of the issues listed below, but referred to elsewhere by basic designation only, form a part of this specification to the extent indicated by references thereto:

1.1 American Society for Testing and Materials (ASTM):

A525-76	Steel Sheet, Zinc-coated (Galvanized) by the Hot-dip Process, General Requirements.
E90-75	Airborne-Sound Transmission Loss of Building Partitions, Laboratory Measurement of.
E413-73	Sound Transmission Class, Classification for Determination of.

1.2 Gypsum Association (GA):

GA-216-77	Recommended Specifications for the Application and Finishing of Gypsum Board.

1.3 Underwriters' Laboratories, Inc. (UL) Publication:

1978	Fire Resistive Index.

2. QUALITY CONTROL: Approvals, except those required for field installations, field applications and field tests, shall be obtained before custom fabrication is started and before delivery of materials or equipment to the project site.

3. SUBMITTALS:

3.1 Tests and Certificates: The testing requirements for materials incorporated in referenced documents will be waived provided the Contractor submits certificates from the manufacturer stating that materials furnished for this project conform to all requirements of this specification and the referenced documents. Material certificates shall be submitted to and approved by the Contracting Officer. Copies of the test reports for fire-resistive assemblies and sound rated assemblies shall be submitted to and approved by the Contracting Officer before work is started. Copies of other test reports need not be submitted except as specifically requested by the Contracting Officer.

3.2 Catalog Data: Complete descriptive literature for each type of wallboard and fastener shall be submitted to and approved by the Contracting Officer before work is started. Data which describes more than one type, size, model, or item shall be clearly marked to indicate which type, size, model, or item the Contractor intends to provide. Data shall be sufficient to show conformance to specified requirements.

3.3 Samples: The following samples shall be submitted to and approved by the Contracting Officer before work is started:

(a) Fire-retardant Gypsum Wallboard: Two units, 12 inches square.

(b) Water-resistant Gypsum Backing Board: Two units, 12 inches square.

(c) Screws: Two of each type.

(d) Adhesive: One quart.

(e) Cornerbead and Edge Trim: Two of each type.

(f) Joint Reinforcement: Two of each type.

(g) Acoustical Sealant: One tube.

3.4 Shop Drawings: Shop drawings shall be submitted to and approved by the Contracting Officer before work is started. Shop drawings shall indicate fire-resistive ratings; sound ratings; location and type of fasteners; elevations and details at doors, corners, partition intersections, ceilings and joints; location of all expansion and control joints; and other details of construction.

4. DELIVERY AND STORAGE: Wallboard and accessories shall be delivered to the site in original unopened containers, bundles and rolls, bearing manufacturer's name and brand. Materials shall be kept dry, preferably by being stored on level platforms inside the building under roof. When necessary to store materials outside, they shall be stacked off the ground, supported on level platforms, and fully protected from the weather, as approved. Flammable materials shall be stored away from fire, sparks, and smoking, as required.

5. FIRE-RESISTIVE ASSEMBLIES: Wherever fire rated gypsum wallboard construction is indicated, all materials, methods, and installation, including types and spacing of fasteners, shall be in accordance with the specifications of the following testing agencies to provide the fire ratings indicated:

(a) Underwriters' Laboratories, Inc.'s "Fire Resistive Index" for the UL design numbers indicated.

(b) University of Ohio's published test reports for the test numbers indicated.

6. SOUND RATED ASSEMBLIES: Gypsum wallboard construction shall conform to the performance requirements of ASTM E90 and ASTM E413 for indicated STC ratings.

7. GENERAL: All materials, application, and finishing shall be in accordance with applicable recommendations of GA-216, unless otherwise specified herein. The word "should", wherever it occurs in GA-216, shall be interpreted to mean "shall".

8. MATERIALS:

8.1 Gypsum Wallboard: Provide 48 inches wide and in lengths as long as practical to minimize number of joints.

8.1.1 Fire-Retardant Gypsum Wallboard: Type X, 5/8 inch thick with tapered edges.

8.1.2 Water-resistant Gypsum Backing Board: Type X, 5/8 inch thick. Where joints will be exposed to view, the board shall have tapered edges. Water-resistant properties of wallboard shall not be impaired by aging of panels. Multilayered face and back paper and core shall be treated.

8.2 Fasteners:

8.2.1 Screws: Screws shall be provided for fastening wallboard to wood and metal framing members.

8.2.2 Adhesive: Provide for single layer wallboard system at radio frequency shielding enclosure.

8.3 Cornerbead and Edge Trim: Cornerbead and edge trim shall conform to GA-216.

8.4 Acoustical Sealant: Type recommended by gypsum wallboard manufacturer to provide STC ratings indicated.

8.5 Sheet Steel at Access Panels: ASTM A525 with G90 coating designation, 16 gage.

9. WALLBOARD SYSTEMS:

9.1 Single-Layer System: Single-layer system of wallboard shall be provided where indicated. The wallboard shall be fire-retardant gypsum wallboard and fire-retardant water-resistant gypsum wallboard as specified hereinbefore.

9.2 Double-Layer System: Double-layer system of wallboard shall be provided where indicated. The base layer shall be fire-retardant as specified hereinbefore. Face layer shall be fire-retardant gypsum wallboard as specified hereinbefore.

9.3 Tile-Base System: Water-resistant backer board, as specified hereinbefore, shall be provided where indicated to receive ceramic tile.

10. APPLICATION: Installation shall conform to GA-216, except as indicated or specified otherwise. During application of wallboard, temperature within building shall be maintained at not less than 50 degrees Fahrenheit. Ventilation shall be provided as required, to prevent moisture build-up. Wallboard shall be applied with reverse side against framing members, with panels in contact with each other but not forced into place. At corners, edges of panels shall be concealed by the overlapping of abutting panel edges. Panels shall be so staggered that the corners of any four panels will not meet at a common point except at vertical corners. Edges of cut-outs for plumbing pipes shall be treated with a waterproofing agent as recommended by wallboard manufacturer or treated with two coats of sizing varnish. Treatment shall extend not less than 4 inches out on paper on both sides of the board. Wallboard shall be held in firm contact with framing members while fasteners are being driven. Fasteners shall be spaced not less than 3/8-inch nor more than 1/2-inch from edges and ends of panels except as specified otherwise hereinafter. Screws shall be staggered on edges and ends of panels. Fasteners shall not be allowed where gypsum wallboard is installed in radio frequency shielding enclosure; secure gypsum wallboard with adhesive only. Expansion joints shall be provided as recommended by wallboard manufacturer, as approved.

10.1 General: For ceilings, fastening shall begin at the center of the panel and proceed toward the edges and ends, with fastening completed on each framing member before proceeding to the next framing member. For walls, fastening shall begin at the top center of the panel and proceed toward the edges or ends, with the top fastening completed before proceeding to lower fastenings.

10.2 Attachment to Wood Framing: Wallboard shall be attached through plywood sheathing to wood studs by the screw method.

10.3 Attachment to Metal Framing: Wallboard shall be attached to metal framing with screws. Face layer of double-layer system shall be attached by screw method.

10.4 Fire-Resistive and Sound Rated Assemblies: Fire-resistive assemblies and sound-rated assemblies shall be installed to provide the fire resistive ratings and sound ratings indicated.

10.5 Cornerbead and Edge Trim: Install in accordance with GA-216.

10.6 Access Panels: Fabricate access panels as indicated. Fasten steel sheet to edge trim with sheet metal screws spaced 4 inches on centers.

10.7 Sealant Application: Install acoustical sealant to provide the STC ratings indicated. Apply sealant as recommended by the manufacturer, filling all cut-outs, openings, voids at floor and ceiling where partitions abut to dissimilar construction, and elsewhere to provide the required sound ratings.

11. FINISHING: Joint, fastener depression, and corner treatment shall be provided. Treatment for water-resistant wallboard shall be as recommended by the wallboard manufacturer as approved.

12. PATCHING: Surface defects and damage shall be corrected as required to leave wallboard smooth, uniform in appearance, and ready to receive finish as specified in another section.

---END---

SECTION 09261. GYPSUM WALLBOARD CAVITY SHAFT WALLS

1. APPLICABLE PUBLICATIONS: The following publications of the issues listed below, but referred to thereafter by basic designation only, form a part of this specification to the extent indicated by the references thereto.

1.1 Federal Specification:

QQ-S-775E	Steel Sheets, Carbon, Zinc-coated (Galvanized) by the Hot-dip Process.

1.2 American Society for Testing and Material (ASTM) Specifications:

A446-76	Steel Sheet, Zinc-coated (Galvanized) by the Hot-dip Process, Structural (Physical) Quality.
A525-76	Steel Sheet, Zinc-coated (Galvanized) by the Hot-dip Process.
C36-76a	Gypsum Wallboard.
C442-76	Gypsum Backing Board.
C475-64(1975)	Joint Treatment Materials for Gypsum Wallboard Construction.

1.3 Gypsum Association (GA):

GA-216-77	Recommended Specifications for the Application and Finishing of Gypsum Board.

2. QUALITY CONTROL: Approvals, except those required for field installation, field application and field tests, shall be obtained before delivery of materials to the project site.

3. SUBMITTALS:

3.1 Tests and Certificates: The testing requirements for materials incorporated in referenced documents will be waived provided the Contractor submits certificates from the manufacturer stating that materials furnished for this project conform to all requirements of this specification and the referenced documents. Material certificates shall be submitted to and approved by the Contracting Officer. Copies of test reports for fire-resistive assemblies shall be submitted to and approved by the Contracting Officer before work is started. Copies of other test reports need not be submitted except as specifically requested by the Contracting Officer.

3.1.1 Sample Certificate: The certificate shall not contain statements that could be interpreted to imply that the product does not meet all requirements specified, such as "as good as"; "achieve the same end use and results as materials formulated in accordance with the referenced specification"; "equal or exceed the service and performance of the specified material". The certificate should simply state that the product conforms to all requirements specified.

SAMPLE CERTIFICATE

The manufacturer hereby certifies that all following products being furnished for this project conform to all requirements of the project specifications and the respective reference specifications:

MANUFACTURER AND PRODUCT	REFERENCE SPECIFICATION
John Doe Company Gypsum Wallboard	ASTM C36

SIGNATURE AND TITLE

3.2 Shop Drawings: Shop drawings shall be submitted to and approved by the Contracting Officer before work is started. Shop drawings shall indicate fire-resistive ratings, location and type of fasteners; elevations and details at corners and joints; and other details of construction.

3.3 Samples: The following samples shall be submitted to and approved by the Contracting Officer before work is started.

(a) Liner Panel: Two units, 12 inches square.

(b) Gypsum Wallboard: Two units, 12 inches square.

(c) Steel Studs: Two units, 12 inches long.

(d) Steel Runners: Two units, 12 inches long.

(e) Corner Beads: Two units, 12 inches long.

(f) Trim: Two units, 12 inches long.

(g) Staples: Two units.

(h) Fasteners: Two of each type.

(i) Joint Treatment Materials: Data.

3.4 Catalog Data: Complete descriptive literature for each type of wallboard and fastener shall be submitted to and approved by the Contracting Officer. Data which describes more than one type, size, model, or item shall be clearly marked to indicate which type, size, model, or item the Contractor intends to provide. Data shall be sufficient to show conformance to specified requirements.

4. DELIVERY AND STORAGE: Materials shall be delivered to the site in original unopened containers, bundles and rolls, bearing manufacturer's name and brand. Materials shall be kept dry, preferably by being stored on level

platforms inside the building under roof. When necessary to store materials outside, they shall be stacked off the ground, supported on level platforms, and fully protected from the weather, as approved. Flammable materials shall be stored away from fire, sparks, and smoking, as required.

5. FIRE-RESISTIVE ASSEMBLIES: Wherever fire rated gypsum wallboard cavity shaft wall construction is indicated, all materials, methods, and installation, including types and spacing of fasteners, shall be in accordance with the University of California's published test reports for the test numbers indicated to provide the fire ratings indicated.

6. MATERIALS:

6.1 Liner-Panel: Liner panel shall be 1 inch thick, 24 inches wide, by height required, with beveled edges, and shall conform to ASTM C442, Type X.

6.2 Gypsum Wallboard: Gypsum wallboard shall be 1/2 inch thick, 48 inches wide, length as required, tapered edge and shall conform to ASTM C36, Type X.

6.3 Steel Components: Fabricate components from steel conforming to ASTM A446, Grade A with a G90 Coating Designation (zinc coated) in accordance with ASTM A525.

6.3.1 Steel Studs: Rigid rolled formed sections specially shaped to engage 1 inch liner panels. Studs shall be 1-1/2 inches wide by 2-1/2 inches deep and shall be fabricated from 22 gage steel.

6.3.2 Steel Runner: Runners shall be "J" shaped sections for floor and ceiling runners and as vertical members at terminals, intersections, and corners. Runners shall be 2-1/2 inches deep with 1 inch high and 2-1/4 inch high legs and shall be fabricated from 24 gage steel.

6.4 Joint Treatment Materials: Joint treatment materials shall conform to ASTM C475.

6.5 Water: Water shall be clean and potable.

6.6 Corner Beads: Corner beads shall be formed to an angle of 80 to 90 degrees and shall be zinc-coated steel not lighter than 26 gage conforming to QQ-S-775, Type I, Class e, with wings not less than 7/8 inch wide and perforated.

6.7 Mouldings and Metal Trim: Mouldings and metal trim shall be the type recommended by wallboard manufacturer as approved.

6.8 Staples: Staples for corner beads, mouldings, and metal trim shall not be lighter than 16USS gage galvanized wire, flat, 7/16 inch outside width of crown with legs not less than 1-1/8 inch long with divergent points.

6.9 Fasteners:

6.9.1 Runner Fasteners: Runner fasteners shall be power-driven type, to withstand 193 pound single shear and 200 pound bearing force when driven through structural head or base and without exceeding allowable design stress in runner, fastener, or structural support.

6.9.2 For Gypsum Wallboard: Gypsum wallboard type screws, not less than 1 inch long for base layer and not less than 1-5/8 inch long for face layer.

6.10 Sealant: Sealant shall be as specified in section entitled "Calking".

7. INSTALLATION: During application of wallboard, temperature within building shall be maintained at not less than 50 degrees F. Ventilation shall be provided as required, to prevent moisture build-up. Total thickness of wall assembly shall be 3-1/2 inches. Fire-resistive gypsum wallboard cavity shaft wall assembly shall be installed to provide the fire-resistive ratings indicated.

7.1 Runners: Position runners at floor and ceiling with the short leg toward finish side of wall. Attach runners with fasteners at both ends and a maximum of 16 inches on centers.

7.2 Studs: Cut studs and runners used vertically 3/8 inch to not more than 1/2 inch less than floor-to-ceiling height so as to engage short leg of floor and ceiling runner. Install studs over both long panel edges of closure panels and on abutting edges of both adjacent panels.

7.3 Liner Panels: Cut liner panels 1 inch less than floor-to-ceiling height to allow tilting into place when inserted into floor runners. With panel top held against back flange of ceiling runner, insert panel edge fully into stud groove, tightly abutting the web. Where runners are installed vertically attach liner to runner flange with 1-5/8 inch screws spaced 24 inches on centers. End joints in liner panels not permitted.

7.4 Gypsum Wallboard: Erect gypsum wallboard base layer vertically over one side of studs. Fasten base layer to studs with 1 inch screws spaced 24 inches on centers at edges and in the field. Apply second layer of gypsum wallboard vertically. Stagger edge joints in the face layer panels from edge joints in base layer. Attach face layer panels with 1-5/8 inch long screws, staggered from those in base layer, spaced 12 inches on center at edges and in field and driven into studs.

7.5 Accessories:

7.5.1 Corner Beads: Reinforce all vertical exterior corners with corner beads fastened with staples spaced 9 inches on centers on both flanges along entire length of bead.

7.5.2 Mouldings or Metal Trim: Where wall assembly terminates against dissimilar material, apply metal trim over face layer edge of gypsum wallboard. Fasten trim with screws or fasteners spaced 12 inches on centers.

7.6 Sealant: Apply sealant at locations indicated and required by cavity shaft wall manufacturer.

8. FINISHING: Joint, fastener depression, and corner treatment for gypsum wallboard shall conform to the requirements of GA-216.

9. PATCHING: Surface defects and damage shall be corrected as required to leave finish surfaces smooth, uniform in appearance, and ready to receive finish as specified in another section.

---END---

SECTION 09310. TILE WORK

1. APPLICABLE PUBLICATIONS: The following publications of the issues listed below but referred to thereafter by basic designation only, form a part of this specification to the extent indicated by the references thereto:

1.1 American National Standards Institute, Inc. (ANSI) Publications:

A108.1-1976	Installation of Glazed Wall Tile, Ceramic Mosaic Tile, Quarry Tile and Paver Tile With Portland Cement Mortar.
A108.4-1976	Installation of Ceramic Tile with Water-resistant Organic Adhesive.
A108.5-1976	Installation of Ceramic Tile with Dry-set Portland Cement Mortar or Latex-Portland Cement Mortar.
A118.1-1976	Specifications for Dry-Set Portland Cement Mortar.
A118.4-1976	Specifications for Latex-Portland Cement Mortar.
A136.1-1967	Organic Adhesives for Installation of Ceramic Tile.

1.2 American Society for Testing and Materials (ASTM) Publications:

A185-73	Welded Steel Wire Fabric for Concrete Reinforcement.
C144-76	Aggregates for Masonry Mortar.
C150-74	Portland Cement.
C206-68(74)	Special Finishing Hydrated Lime.
C207-74	Hydrated Lime for Masonry Purposes.

1.3 Tile Council of America (TCA) Publication:

A137.1-1976	Recommended Standard Specifications for Ceramic Tile.

2. QUALITY CONTROL: Approvals, except those required for field installations, field applications, and field tests, shall be obtained before delivery of materials or equipment to the project site.

3. SUBMITTALS:

3.1 Samples: The following tile samples of the actual tile to be provided shall be submitted and approved before tile work is started:

(a) Floor Tile: Duplicate sheets of tile, each about 12 inches square, showing colors, finish, pattern and form of each type, and 4 units of glazed ceramic floor tile.

(b) Wall Tile: Duplicate of four tiles each showing size, form, finish and range and shades of each color.

(c) Trim Units: Duplicate pieces of each color, finish and type.

(d) Accessories: One of each color, finish, type and style.

3.2 Tile Certification: Provide a Master Grade Certificate for all tile, prior to shipment, certifying the grade, type and quantity of material. Tile covered by Master Grade Certificates shall bear certification marks on cartons or labels. Certificate shall be submitted in triplicate and made out in the form shown in TCA A137.1. In lieu of Master Grade Certificate and certification marks, certified copies of test reports from approved laboratories performed on previously manufactured tile may be submitted. The test reports shall show that the tile meets the physical requirements and tests of TCA A137.1. Test reports shall be accompanied by certification from the manufacturer certifying that the previously tested tile is of the same type, quality and manufacture as that supplied for this project.

3.3 Tests and Certificates: The testing requirements incorporated in referenced documents will be waived provided the manufacturer submits certificates that previously manufactured materials have been tested by recognized laboratories, that such materials meet testing requirements specified and that the tested material is of the same type, quality, manufacture, and make as that proposed for this project. Copies of the test reports need not be submitted.

4. DELIVERY AND STORAGE: Manufactured materials shall be delivered in the manufacturer's original unbroken packages or containers that are labeled plainly with the manufacturer's names and brands. Containers for tile shall be grade sealed and delivered to the site with unbroken seals. Materials shall be stored in dry weathertight enclosures, and shall be handled in a manner that will prevent the inclusion of foreign materials and damage by water or dampness.

5. ENVIRONMENTAL CONDITIONS: Tile work shall not be started unless the ambient temperature of the area in which the work occurs is at least 50 degrees F and rising, and is maintained above 50 degrees F without interruption while the work is being done and for at least three days after the completion of the work.

6. PROTECTION: Adequate protective measures shall be taken in the area where tile work is to be done, to protect the work of all other trades from damage.

7. MATERIALS: All materials shall conform to the standards listed herein. Colors shall be as indicated. All materials shall be provided to match samples on display at the office of the Contracting Officer.

7.1 Tile: Tile shall be ceramic, Standard Grade, conforming to TCA A137.1. Tile work shall include matching trim units and accessories.

7.1.1 Unglazed Ceramic Mosaic Tile: Tile shall be of porcelain tile, size as indicated, with cushion edges.

7.1.2 Slip-Resistant Ceramic Mosaic Tile: Ceramic mosaic tile for floors, where indicated, shall be the slip-resistant type, 1-inch by 1-inch

nominal size, with cushion edges. The body of the tile shall contain not less than 7.5 percent of abrasive grains by weight. Abrasive grains shall be rustproof and shall be uniformly distributed throughout the tile body.

7.1.3 Glazed Ceramic Floor Tile: Tile shall be glazed ceramic, natural clay, with an abrasive grain fired into the glaze, and 12 inch by 12 inch by 1/2 inch thick.

7.1.4 Glazed Wall Tile: Tile shall be 4-1/4 by 4-1/4 by 5/16 inch with cushion edges.

7.1.5 Glazed Ceramic Wall Tile: Same as specified in paragraph entitled "Glazed Ceramic Floor Tile", except without abrasive grain.

7.1.6 Trim Units: Trim units shall be provided where indicated or necessary for a complete and neatly finished installation. Internal corners shall be coved and external corners rounded, using appropriate matching trim units. Base units shall be provided where wall tile is not scheduled. Trim units shall be of material and finish identical to wall tile where wall tile is provided, or floor tile where wall tile is not provided.

7.1.7 Accessories: Accessories shall be of the built-in type and of the same materials and finish as the wall tile.

7.1.7.1 Soap Dish and Grab Bar (Indicated on Drawings as "BA37): Combination soap dish and grab bar shall be provided where indicated, and shall be porcelain type tile with integral projecting grab bar and extended lip drain.

7.2 Hydrated Lime: Lime shall conform to the requirements of ASTM C206, type S, or ASTM C207, type S.

7.3 Sand: Sand for mortar setting beds and grouting and pointing mortar shall conform to the requirements of ASTM C144. Sand for grouting and pointing mortar shall pass a No. 16 (1.18 mm) sieve. Provide white sand for white grout. Provide 30-60 mesh sand where specified.

7.4 Water: Water shall be clean and potable.

7.5 Elastomeric Waterproofing Membrane: See section entitled "Elastomeric Membrane Waterproofing".

7.6 Dry-Set Mortar: Mortar mix shall be a factory-sanded mortar mix conforming to the requirements of ANSI A118.1.

7.7 Latex Portland Cement Mortar: ANSI A118.4.

7.8 Organic Adhesive: ANSI A136.1.

7.9 Grout: Commercial Portland cement grout, sand-Portland cement grout and dry-set grout. Grout color shall be as indicated. Do not use sand-Portland cement grout with glazed wall and floor tile.

7.10 Reinforcing Wire Fabric: Fabric shall conform to the requirements of ASTM A185 and shall be galvanized, 2 x 2 mesh, 16/16 wire, 3 x 3 inch mesh, 13/13 wire, or 1-1/2 x 2 inch mesh, 16/13 wire weighing not less than 1.8 pounds per square yard.

7.11 Metal Dividing Strips: Provide at joints where floor tile abuts and is flush with other types of floor finishes. Dividing strips shall be the heavy-top terrazzo type, fabricated from brass or zinc alloy, approximately 1/16-inch thick with a 1/4-inch thick top, and a depth equal to the thickness of the tile plus the setting bed.

7.12 Portland Cement: ASTM C150, Type I; waterproofed and white where specified.

7.13 Admixture: Admixture for slurry bond coat and thin bed mortar for 12 inch by 12 inch by 1/2 inch thick glazed ceramic tile shall be equal to Laticrete International, Incorporated, Laticrete 4237.

8. MORTAR MIXES: Mortar materials shall be measured in approved containers which will insure that the proportions of materials specified in Table I will be controlled and accurately maintained during the progress of the work. Measuring materials with shovels ("shovel count") will not be permitted. Mortar shall be mixed in proportions by volume, in approved mixing machines or mortar boxes. The quantity of water shall be controlled accurately and uniformly. The aggregates shall be introduced and mixed in such a manner that the materials will be distributed uniformly throughout the mass. A sufficient amount of water shall be added gradually, and the mass further mixed until a mortar of the plasticity necessary for purposes intended is obtained. Mortar boxes, pans, floor slabs, and mixer drums shall be kept clean and free from debris or dried mortar. Mortar shall be used before the initial setting of the cement has occured; retempering of mortar in which cement has started to set will not be permitted. Anti-freeze compounds, salts, or any other substance used to lower the freezing points of mortar, will not be permitted. Settings beds for showers shall be waterproofed, using an approved waterproofing admixture, mixed in accordance with the manufacturer's printed directions.

TABLE I

Mortar Setting Bed Mixes
(parts by volume)

Tile Type	Location	Portland Cement	Dry Sand	Damp Sand	Lime
Unglazed Ceramic Mosaic	Floors	1	5	or 6	1/10
	Showers	1	3-1/2	or 4	-
Glazed	Walls	1	4	or 5	1/2
Interior, (except 12 inch by 12 inch by 1/2 inch glazed wall tile)	Floors	1	-	6	1/10

9. INSTALLATION: Tile work shall not be started until the roughing in for plumbing, heating, ventilating, air conditioning, and electrical work has been completed and tested; built-in bath tubs, shower stalls and membrane waterproofing has been installed and tested. Surfaces to receive tile shall be clean, free of dust, dirt, oil, grease, and other deleterious substances.

9.1 Installation of Tile Flooring: Floor tile operations in spaces receiving wall tile shall not be started until after wall tile installation has been completed. Insure elastomeric membrane waterproofing is properly installed in areas where indicated.

9.1.1 In Portland Cement Mortar:

9.1.1.1 Ceramic Mosaic Floor Tile: Ceramic mosaic floor tile shall be installed in accordance with ANSI A108.1. Floor surfaces shall have level surfaces within a tolerance of 1/4 inch in 10 feet. Install reinforcing wire fabric in setting bed.

9.1.1.2 Glazed Ceramic Floor Tile: Glazed ceramic floor tile shall be installed in accordance with ANSI A108.1, unless otherwise indicated. Floor surfaces shall have level surfaces within a tolerance of 1/4 inch in 10 feet. Install reinforcing wire fabric in setting bed. The 12 inch by 12 inch by 1/2 inch floor tile shall be soaked in water for 1/2-hour and drained on edge to remove surface water before placing on mortar bed. A 1/16 inch thick slurry bond coat, consisting of one bag of Portland cement and five gallons of admixture, shall be applied to the mortar bed and a skim coat shall be applied to back of each tile just prior to placing on bed.

9.1.2 In Dry-set Mortar or Latex Portland Cement Mortar: Ceramic mosaic floor tile shall be installed in accordance with ANSI A108.5. Floor surfaces shall have level surfaces within a tolerance of 1/8 inch in 10 feet from the

required plane; nor more than 1/16 inch in 12 inches when measured from the high points in the surface. Before tile is installed, the floor shall be tested for levelness or uniformity of slope by flooding it with water. Areas where water ponds shall be filled, leveled and retested before mortar is applied.

9.2 Installation of Wall Tile and Trim:

9.2.1 In Portland Cement Mortar:

9.2.1.1 Scratch Coat: Scratch coat for wall tile backing is specified in section entitled "Plastering and Stuccoing".

9.2.1.2 Wall Tile and Trim: Glazed wall tile and trim shall be installed in accordance with ANSI A108.1.

9.2.2 In Dry-set Mortar or Latex Portland Cement Mortar: Wall tile and trim units shall be installed in accordance with ANSI A108.5.

9.2.3 In Organic Adhesive: Wall tile and trim units shall be installed in accordance with ANSI A108.4.

9.2.4 In Thin Bed Mortar: Glazed ceramic wall tile (12 inch by 12 inch by 1/2 inch) and glazed ceramic cove base (6 inch by 12 inch by 1/2 inch) shall be installed using thin bed mortar method. The thin bed mortar mix shall consist of 1 bag of Portland cement, 100 pounds of sand (30-60 mesh) and 5 gallons of admixture. Mix materials in accordance with admixture manufacturer's recommendations. The thin bed mortar shall be applied with a 1/4 inch by 3/8 inch notched trowel using a scraping motion to work the material into good contact with the surface to be covered. Only as much mortar shall be applied as can be covered with tile within 20 minutes or while the surface is still tacky. In addition a small quantity of mortar shall be troweled or scraped onto the back of each tile. Tiles shall then be set in place and rubbed or beaten with a small beating block. Beating or rapping of the tile is necessary to insure proper bond and also to level the surface of the tile. Tile shall be aligned to show uniform joints and then allowed to set until firm. Excess mortar shall be cleaned from the surface of the tile with a wet cloth or sponge while the mortar is fresh.

9.3 Metal Dividing Strips: Install in the mortar setting bed while it is still in a plastic state. Set strips accurately in straight, unbroken lines, flush with the finished floor surfaces.

9.4 Joints: Joints shall be parallel and uniform in width, plumb, level, and in alignment. Square tiles shall be set with straight joints.

9.4.1 Joint Width: Joints shall be uniform and spaced to accommodate the tile in the given spaces with a minimum of cutting except that the standard mounting widths between units abutting sheets of mounted ceramic mosaic tile shall be maintained. Joint widths shall be as follows:

(a) Mounted Tile: As determined by the mounted tile spacing.
(b) Unmounted Glazed Wall Tile: As determined by spacing lugs.
(c) Glazed Ceramic Floor Tile and Wall Tile: 3/8 inch for 12 inch by 12 inch by 1/2 inch units.
(d) Trim Units and Accessories: Conform to that of adjoining tile units.

9.4.2 Grouting and Pointing: Glazed wall tile, if dry, shall be wetted before applying Portland cement grout. Do not use sand - Portland cement grout with glazed wall and floor tile.

9.4.3 Wall Tile and Trim: Grout glazed wall tile in accordance with ANSI A108.1, ANSI A108.4 and ANSI A108.5.

9.4.4 Ceramic Mosaic Tile and Glazed Ceramic Floor Tile: Grout ceramic mosaic tile and glazed ceramic floor tile in accordance with ANSI A108.1 and ANSI A108.5.

9.5 Expansion and Control Joints: See section entitled "Calking", for materials and installation. Expansion and control joints in tile work shall be located in floor tile over joints in structural floors, where subfloor materials change, where tile abuts restraining surfaces such as perimeter walls and curbs, and at intervals of 20 feet each way in larger areas. Locate control joints in wall tile over masonry control joints, where back-up materials change, and at intervals of 20 feet in long walls. Unless indicated otherwise, expansion and control joints shall be treated as follows;

(a) Joints shall extend completely through tile mortar bed and reinforcing. Preformed joint filler of back-up material shall be inserted in joints at proper depth to provide the correct cavity depth for the sealant.

(b) Width of joints shall be same size as tile joints but not less than 1/8 inch nor more than 1/4 inch wide.

(c) Prior to grouting, keep joints open and clean by stuffing with paper or other material to prevent filling with dirt, grout or mortar.

(d) After tile is grouted and completely dry, remove paper or other temporary filler material; brush joints clean and fill joints with the specified back-up material and sealant.

10. CURING AND CLEANING. Floors shall be covered with waterproof paper with all joints lapped at least 4 inches and the laps tapesealed or held down with planks or other weights, and allowed to damp cure for at least 72 hours before foot traffic is permitted thereon. All completed tile work shall be thoroughly sponged and washed diagonally across joints, and finally polished with clean, dry cloths. Acid cleaning of unglazed tile, when necessary, shall be done within ten days after setting tile. All metal shall be covered with an approved grease and the tile wet with clean water, before tile is cleaned

with a 10 percent muriatic acid solution. After acid cleaning, the tile shall be flushed with clean water, and the grease coating on metal removed. Acid cleaners shall not be used on glazed tile. Protect all adjacent surfaces and the work of other trades from damage during the work and from the efforts of the cleaning material.

11. PROTECTION: Finished tile floors shall be covered with clean building paper before foot traffic is permitted on them. Board walk-ways shall be placed on floors that are to be continuously used as passageways by workmen. Tiled vertical outside corners (external angles) shall be protected with board corner strips in areas used as passageways by workmen.

---END---

SECTION 09330. ACID-RESISTING QUARRY TILE FLOORS

1. APPLICABLE PUBLICATIONS: The following publications of the issues listed below, but referred to elsewhere by basic designation only, form a part of this specification to the extent indicated by the references thereto:

1.1 American National Standards Institute (ANSI) Publications:

A108.1-1976 Installation of Glazed Wall Tile, Ceramic Mosaic Tile, Quarry Tile and Paver Tile With Portland Cement Mortar.

1.2 American Society for Testing and Materials (ASTM) Publications:

C144-76 Aggregate for Masonry Mortar.

C150-77 Portland Cement.

C267-71 Method of Test for Chemical Resistance of Mortars.

C307-61(1971) Tensile Strength of Chemical-resistant Resin Mortars.

C321-64(1971) Bond Strength of Chemical-resistant Mortars.

C395-74 Specification for Resin-type Chemical-Resistant Mortars.

C413-75 Method of Test for Absorption and Apparent Porosity of Chemical-Resistant Mortars.

D638-76 Test for Tensile Properties of Plastics.

1.3 Tile Council of America (TCA):

137.1-76 Recommended Standard Specification for Ceramic Tile.

2. QUALITY CONTROL: Approvals, except those required for field installations, field applications, and field tests, shall be obtained before delivery of material or equipment to the project site.

2.1 Manufacturer's Qualifications: Materials manufacturer shall have a factory-trained and field-experienced representative on job site to instruct and observe on-site installation.

2.2 Tests:

2.2.1 Chemical Resistance: Testing of mortar and grout shall be in accordance with ASTM C267, except as modified herein. Test specimens shall be immersed in the test solutions for 28 days, and the solutions shall be maintained continuously at room temperature. The test specimens shall not have a change in weight of more than 5 percent of their weight before immersion, or a compressive strength of less than 90 percent of the

compressive strength of specimens that have aged in air at 70 to 80 degrees Fahrenheit during the total test period. Mortar and grout shall be tested for chemical resistance to the following solutions:

(a) Acetic acid, 10 percent.
(b) Citric acid, 40 percent.
(c) Lactic acid, 10 percent.
(d) Sodium hypochlorite, 2 percent.
(e) Trisodium phosphate.
(f) Household ammonia.
(g) Sugar, saturated solution.
(h) Vegetable oil.

2.2.2 Physical Properties: After curing for seven days at 70 to 80 degrees Fahrenheit, the mortar and grout shall: (1) have a water absorption of not more than 0.5 percent when tested in accordance with ASTM C413; (2) have a hardness of not less than 90 percent of its initial hardness immediately before exposure, when tested after being exposed for 6 hours at 200 degrees Fahrenheit. Hardness tests shall be made on 3/8-inch by 3/4-inch by 4-inch samples with a Barcol Hardness Tester, within 30 seconds after the samples are removed from the oven.

3. SUBMITTALS:

3.1 Sample Panel: A sample panel of quarry tile on plywood approximately 2 feet by 2 feet, shall be submitted and approved before work is started. The panel shall show the workmanship, jointing, color range of tile units, control and expansion joint, and color of grout. The work throughout the project shall match the approved sample.

3.2 Tile Certification: A Master Grade Certificate shall be submitted for all tile, prior to shipment, certifying the grade, type and quantity of material. Tile covered by Master Grade Certificates shall bear certification marks on cartons or labels. Certificate shall be submitted in triplicate and made out in the form shown in TCA 137.1. In lieu of Master Grade Certificate and certification marks, certificates may be submitted as specified herein.

3.3 Manufacturer's Installation Instructions: Two copies of the manufacturer's installation/cleaning instructions and safety requirements, and an estimated quantity of materials per 100 square feet of floor of the size tile to be provided shall be submitted and approved.

3.4 Samples: The following tile samples of the actual tile to be provided shall be submitted and approved before work is started.

(a) Quarry Tile: Four tiles in duplicate ranges of shades of each color.

(b) Trim Units: Duplicate pieces of each color, finish, and type.

(c) Mortar and Grout: Duplicate pieces of each color of mortar and grout.

(d) Expansion and Control Joint Material: Duplicate samples of each color of joint filler.

3.5 Certificates: Submit certificates from the manufacturer attesting that the following products conform to all requirements of this specification and of reference documents:

Quarry tile
Acid-resisting mortar and grout
Expansion and control joint material

3.5.1 Sample Certificate: The certificate shall not contain statements that could be interpreted to imply that the product does not meet all requirements specified, such as "as good as"; "achieve the same end use and results as materials formulated in accordance with the referenced specification"; "equal or exceed the service and performance of the specified material". The certificate should simply state that the product conforms to all requirements specified.

SAMPLE CERTIFICATE

The manufacturer hereby certifies that the following products being furnished for this project conform to all requirements of the project specifications and of the reference specifications listed.

MANUFACTURER AND PRODUCT	REFERENCE SPECIFICATION
John Doe Company Portland Cement, Type I	ASTM C150-77, Type I.

SIGNATURE AND TITLE

3.6 Certified Test Reports: Submit certified copies of the reports of all tests required in reference publications or specified herein for the products listed hereinafter. The tests shall have been performed in a laboratory meeting the requirements of the Quality Control Section of Division 1. The tests shall have been performed within 3 years of the date of submittal of the copies. Test reports shall be accompanied by certificates from the manufacturer certifying that the tested products are of the same type, quality, manufacture, and make as those being furnished for this project.

Acid-resisting mortar and grout
Expansion and control joint materials

3.7 Shop Drawings: Shop drawings shall be submitted and approved before delivery of materials to the site. Shop drawings shall show layout, dimen-

sions, locations of expansion and control joints, and details.

4. ENVIRONMENTAL CONDITIONS: Tile work shall not be started unless the ambient temperature of the area in which the work occurs is at least 60 degrees F and rising, and the slab temperature is not less than 60 degrees F. The slab temperature shall be determined by placing a thermometer on the slab. The room and slab temperature shall be maintained without interruption while the work is being done and for at least three days after the completion of the work.

5. DELIVERY AND STORAGE: Materials shall be delivered to the site in the manufacturers' original unbroken packages or containers which are labeled plainly with the manufacturers' names and brands. Tile containers shall be grade marked. Materials shall be stored in dry locations and shall be handled in a manner that will prevent the inclusion of foreign materials and damage by water, dampness, or temperature extremes. Immediately before use, materials shall be stored in the area in which they will be used at temperatures not lower than 60 degrees F for not less than 24 hours.

6. GENERAL REQUIREMENTS: Quarry tile shall be applied in acid-resisting resin mortar only by appliers who are specifically authorized or licensed by the resin manufacturer. Except where specified otherwise herein, mortar shall be handled, stored, mixed, and applied in accordance with the manufacturer's printed instructions, including all recommended safety requirements. Tile work shall not be started until the roughing-in for plumbing, heating, ventilating, air conditioning, and electrical work has been completed and tested. The work for all other trades in the area where tile work is to be done shall be protected from damage.

6.1 Expansion and Control Joints: Locate expansion and control joints in floor tile over joints in structural floors; where subfloor materials change; where tile abuts restraining surfaces such as perimeter walls, curbs, columns and pipes, at intervals of 20 feet each way in large areas, and elsewhere as indicated. Locate expansion and control joints in wall base over masonry control joints, where back-up materials change, at intervals of 20 feet in long walls, and elsewhere as indicated. Construct expansion and control joints same width as tile joints but not less than 1/8 inch nor more than 1/4 inch wide. Utilize removable wood strip to establish joint width, and extend joint completely through tile and setting bed.

7. MATERIALS:

7.1 Quarry Tile: Quarry tile shall be Standard Grade, 6 inches by 6 inches by 1/2 inch thick conforming to TCA A137.1, except water absorption shall not exceed 2 percent. Quarry tile shall be of color indicated. Quarry tile shall be of the slip-resistant type containing an abrasive aggregate uniformly impregnated into the face surface of the tile. The abrasive aggregate shall be fused aluminum oxide or other rustproof aggregate of comparable hardness having a grain size smaller than 16 mesh and larger than 100 mesh (US Standard Sieve Sizes). The tile provided shall contain a

population of grains in the surface between 50 percent and 150 percent, on the average by count, as that contained in the approved sample.

7.1.1 Quarry Tile Trim Units: Trim units shall be Standard Grade, conforming to TCA A137.1. Trim units shall match floor units in appearance and composition. Cove base shall be provided around the perimeter of floors. Rounded internal and external corners with 1/2-inch minimum radius shall be provided by using appropriate matching corner units.

7.2 Acid-Resisting Mortar: Acid-resisting mortar (chemical), conforming to ASTM C395, shall be provided for setting beds and joints (grout) of quarry tile floors. Acid-resisting mortar shall be furan resin mortar. When completely set and hard, the mortar shall be free from offensive odors. Furan resin-type mortar shall be a two-component mix consisting of a liquid furan resin and a powder. The liquid shall not contain any non-polymerizable solvent or more than 3 percent water, by weight. The powder shall consist of a hardener and an inert filler.

7.3 Expansion and Control Joint Materials:

7.3.1 Joint Filler: Two component filler, calking grade for vertical joints and pouring grade for horizontal joints. Color shall be black. Physical properties of joint filler shall be as follows:

	Calking Grade	Pouring Grade
Cured Mortar Density, lbs./cu.ft.	40-42	92
Tensile Strength, psi (ASTM C307) after 14 days @ 70 degrees F	300	1130
Tensile Elongation %(ASTM D638) after 30 days @ 70 degrees F	50	50
Compressive Yield, psi after 28 days @ 70 degrees F	700	1500
Bond Strength, psi (ASTM C321) after 28 days @ 70 degrees F	250	greater than strength of concrete
Moisture Absorption % (ASTM C413)	approx. 1	approx. 1
Hardness, after 28 days @ 70 degrees F	74 (Shore A)	70(Shore D)
Minimum setting temperature (temperature of adjacent surfaces)		50 degrees F

7.3.2 Joint Primer: Type recommended by joint filler manufacturer.

7.3.3 Back-up Material: Type recommended by joint filler manufacturer.

7.4 Portland Cement: ASTM C150, Type I.

7.5 Sand: ANSI A108.1 and ASTM C144, washed clean and graded.

7.6 Acid and Alkali Resistant Paint: Type recommended by acid-resisting mortar manufacturer.

7.7 Water: Clean and potable.

7.8 Grout: Same as specified in paragraph entitled "Acid-resisting Mortar".

7.9 Wax: Opaque, white, specially compounded wax for use on exposed surfaces of acid-resisting quarry tile, and of type recommended by acid resisting mortar manufacturer.

7.10 Metal Lath: Metal lath shall be as specified in section entitled "Metal Lathing".

7.11 Tie Wire: Galvanized, annealed, 16 gauge steel wire for securing metal lath.

7.12 Metal Dividing Strips: Provide at joints where floor tile abuts and is flush with other types of floor finishes, except at doors where thresholds are provided. Dividing strips shall be the heavy-top terrazzo type, fabricated from brass or zinc alloy, approximately 1/16-inch thick with a 1/4-inch thick top, and a depth equal to the thickness of the tile plus the mortar bed and the setting bed.

8. MORTAR BED:

8.1 General: Mortar bed materials shall be measured in approved containers which will insure that the proportions of materials specified hereinafter will be controlled and accurately maintained during the progress of the work. Measuring materials with shovels ("shovel count") will not be permitted. Mortar shall be mixed in proportions by volume, in approved mixing machines or mortar boxes. The quantity of water shall be controlled accurately and uniformly. The aggregates shall be introduced and mixed in such a manner that the materials will be distributed uniformly throughout the mass. A sufficient amount of water shall be added gradually, and the mass further mixed until a mortar of the plasticity necessary for purposes intended is obtained. Mortar boxes, pans, floor slabs, and mixer drums shall be kept clean and free from debris or dried mortar. Mortar shall be used before the initial setting of the cement has occurred; retempering of mortar in which cement has started to set will not be permitted. Anti-freeze compounds,

salts, or any other substance used to lower the freezing points of mortar, will not be permitted.

8.2 Proportions: Mortar bed shall be mixed in the following proportions (parts by volume): One part Portland cement, three parts sand, with sufficient water to yield a nearly dry mix.

8.3 Preparation of Structural Floor Slabs: Structural floor surfaces to receive tile shall be clean, free of dust, dirt, oil, grease, and other deleterious substances and shall have a level surface within a tolerance of 1/4-inch in 10 feet.

8.4 Installation of Mortar Bed: Installation of mortar bed shall conform to ANSI A108.1, unless otherwise directed by acid-resisting mortar manufacturer.

9. INSTALLATION OF METAL LATH: Metal lath shall be installed in accordance with section entitled "Metal Lathing".

10. INSTALLATION OF SCRATCH COAT: Installation of scratch coat to metal lath shall be in accordance with section entitled "Plastering and Stuccoing".

11. APPLICATION OF QUARRY TILE FLOORING IN ACID-RESISTING MORTAR: Before tile is applied, the mortar bed as specified in paragraph entitled "Mortar Bed" shall be tested for levelness or uniformity of slope by flooding it with water. Areas where water stands deeper than 1/8-inch shall be filled, leveled, and retested before the setting bed is applied. Floor tile and trim units shall be applied in acid-resisting mortar in accordance with the manufacturer's directions, except as specified otherwise herein.

11.1 Preparation of Tile: Prior to application, the face surfaces of quarry tile floor and trim units shall be factory-coated or field-coated with hot paraffin wax to produce a thin continuous film. Wax shall be applied in such manner that it will not get on edges or backs of tile. Tile shall be handled in a manner that will prevent the waxed surfaces of units from touching the backs or edges of other units. Tile with wax on edges or backs shall be rejected and removed from the job.

11.2 Preparation of Mortar Bed and Scrach Coat for Furan Setting Beds: Mortar bed and scratch coat shall be (1) etched with a solution of one part muriatic acid (31.5 percent, technical grade) and two parts clean water, by volume, applied to deck by brush or garden spray until the solution runs; (2) rinsed thoroughly with water; and (3) allowed to dry. Beds and other surfaces which will be in contact with the setting bed shall be coated with a liberal application of cutback asphalt primer. In lieu of the surface preparation specified, other methods of surface preparation recommended by the manufacturer may be provided, as approved. Proof of satisfactory experience with the recommended method of surface preparation for a period of not less than 5 years shall be submitted with the manufacturer's instructions.

11.3 Setting Bed: A continuous setting bed of acid-resisting mortar, not less than 1/8-inch thick shall be applied with straight-edge trowels to an area that can be tiled during the "open time" of the mortar. Notched trowels may be used, provided that the notches are not less than 3/8-inch deep and the space between notches is not more than twice the width of the notches. Mortar shall be applied to the backs of the tiles to completely fill all grooves. Tile shall be placed into the setting bed and beaten lightly to a true plane. Tile shall be levelled as it is placed, and suitable gauging strips shall be used to insure uniform joints, 1/4-inch minimum and 3/8-inch maximum width. The setting bed shall be allowed to cure sufficiently to anchor the tile in place, not less than 24 hours, at a floor temperature of not less than 60 degrees Fahrenheit.

11.4 Mortar Joints: After the setting bed has cured, joints shall be filled with resin mortar. The mortar shall be spread on the surface of the tile and worked into the open joints with a trowel or rubber squeegee, pushed diagonally across the joints. Joints shall be filled completely flush with the top surfaces of the tile. Excess mortar shall be removed with one pass of the trowel or squeegee in order to prevent imperfect filling and low joints. Voids, pinholes, and depressions shall be filled immediately with additional mortar. The completed joints shall be protected from traffic and permitted to harden for not less than 72 hours.

11.5 Expansion and Control Joint Materials:

11.5.1 General: Conform to the safety precautions and other pertinent recommendations of the joint filler manufacturer.

11.5.2 Cleaning: Immediately prior to filling, clean joints by air blast or vacuum.

11.5.3 Placing: Commence placing joint materials after all construction is nearing completion. Prior to filling, fully pack the joints with back-up material to within 1/2 inch of the finished floor level and apply a uniform coat of primer to all contact surfaces. Mix joint filler in small quantities in accordance with manufacturer's instructions. Fill joints flush with finished floor level in two passes using a plastic squeeze bottle. Apply calking grade to vertical joints using a trowel or calking gun. Exercise care to prevent overfilling. Remove any excess with a straight edge prior to setting, or by grinding after setting.

11.6 Cleaning: After the joints have hardened, tile surfaces shall be scrubbed and washed with steam or hot water to melt the wax coating and remove excess mortar. Remnants of resin mortar shall be removed with wide-bladed paint scrapers or other tools that will not damage tile. Tile shall be rinsed with clean warm water applied with a flat sponge. Excess water shall be

removed from the floor, and the floor shall be left reasonably dry when work is completed. Tile from which mortar cannot be removed from the surface without damage to the tile shall be removed and replaced.

---END---

SECTION 09500. ACOUSTICAL TREATMENT

1. APPLICABLE PUBLICATIONS: The following publications of the issues listed below, but referred to elsewhere by basic designation only, form a part of this specification to the extent indicated by the references thereto:

1.1 Federal Specifications:

QQ-W-423B	Wire, Steel, Corrosion-resisting.
QQ-W-461G	Wire, Steel, Carbon (Round, Bare and Coated).
QQ-N-281D	Nickel-copper-alloy Bar, Plate Rod, Sheet, Strip, Wire, Forgings, and Structural and Special Shaped Sections.
SS-S-118B	Sound-controlling Blocks and Boards (Acoustical Tiles and Panels, Prefabricated).

1.2 American Society for Testing and Materials (ASTM) Publications:

C635-76	Metal Suspension Systems for Acoustical Tile and Lay-in Panel Ceilings.
C636-76	Installation of Metal Ceiling Suspension Systems for Acoustical Tile and Lay-in Panels.
E90-75	Laboratory Measurement of Airborne-sound Transmission Loss of Building Partitions.
E413-73	Determination of Sound Transmission Class.

1.3 Acoustical and Insulation Materials Association (AIMA):

AMA-1-II-1967	Ceiling Sound Transmission Test by Two-room Method.

2. QUALITY CONTROL: Approvals, except those required for field installations, field applications, and field tests shall be obtained before custom fabrication is started and before delivery of materials or equipment to the project site.

3. SUBMITTALS: Items in the following lists which are followed by (CO) shall be approved by the Contracting Officer.

3.1 Certificates: Submit certificates from the manufacturer attesting that the following products conform to all requirements of this specification and of reference documents:

Acoustical units (CO)
Suspension systems (CO)
Screws and Washers (CO)

3.1.1 Sample Certificate: The certificate shall not contain statements that could be interpreted to imply that the product does not meet all requirements specified, such as "as good as"; "achieve the same end use and results as materials formulated in accordance with the referenced specification"; "equal or exceed the service and performance of the specified

material". The certificate should simply state that the product conforms to all requirements specified.

SAMPLE CERTIFICATE

The manufacturer hereby certifies that the following products being furnished for this project conform to all requirements of the project specifications and of the reference specifications listed:

MANUFACTURER AND PRODUCT	REFERENCE SPECIFICATION
John Doe Company Ceiling Suspension Systems No. 6201	ASTM C635, Intermediate Duty

SIGNATURE AND TITLE

3.2 Certified Test Reports: Submit certified copies of the reports of all tests required in reference publications or specified herein for the products listed hereinafter. The tests shall have been performed in a laboratory meeting the requirements of the Quality Control Section of Division 1. The tests shall have been performed within 3 years of the date of submittal of the copies. Test reports shall be accompanied by certificates from the manufacturer certifying that the tested products are of the same type, quality, manufacture, and make as those being furnished for this project.

3.3 Catalog Data: Submit complete descriptive literature for each type of each of the following items. Data which describe more than one type, size, model, or item shall be clearly marked to indicate which type, size, model, or item the Contractor intends to provide. Data shall be sufficient to show conformance to specified requirements.

Acoustical units (CO)
Suspension systems (CO)
Screws and Washers (CO)

3.4 Shop Drawings: Submit complete shop drawings for the following items. Show layout, details, materials, dimensions, finishes, and all information necessary for fabrication and installation of the item.

Suspension systems (CO)
Speaker grille acoustical unit assemblies

3.5 Samples: Submit one sample of each type and size of each of the following items:

Acoustical units (CO)
Suspension systems (CO)
Fasteners (CO)
Speaker grille acoustical units (CO), mounted on speaker back box with speaker. Coordinate with Division entitled "Electrical".
Screws and Washers (CO)

4. DELIVERY AND STORAGE: Deliver acoustical units to the site in the manufacturer's original unopened containers with brand name and type clearly marked. Carefully handle and store material under cover in dry, watertight enclosure. Immediately before installation, store acoustical units for not less than 24 hours at the same temperature and relative humidity as the space where they will be installed.

5. ENVIRONMENTAL CONDITIONS: A uniform temperature of not less than 60 degrees F nor more than 80 degrees F and a relative humidity of not more than 75 percent shall be maintained continuously before, during, and after installation of acoustical units.

6. CEILING SOUND TRANSMISSION CLASS AND TEST: Ceiling sound transmission class (Ceiling STC) shall be as specified. STC range of acoustical units shall be determined in accordance with AIMA Method of Test AMA-1-II and reported in accordance with the appendix to ASTM E90 for 11 frequency data or ASTM E413 for 16 frequency data. Test ceiling shall be continuous at the partition and shall be assembled in the suspension system in the same manner that the ceiling will be installed on the project.

7. MATERIALS: Materials shall conform to the publications listed and the requirements specified hereinafter.

7.1 Acoustical Units: Acoustical units shall conform to SS-S-118, Class 25. All units other than lay-in tiles shall be slotted or kerfed to engage supporting members on at least four edges. Acoustical units "AM-1" and "AM-2" shall be utilized as speaker grilles where indicated. Speaker grille acoustical units shall be provided with 1/8 inch diameter holes factory pre-drilled 1-inch on centers each way as indicated. Screws shall be self-tapping oval head screws; washers shall be finishing washers. Both screws and washers shall be painted white in color to match acoustical units.

7.1.1 Panels for Exposed-grid System: Indicated on drawings as Acoustical Material "AM-1".

(a) Type: III.

(b) NRC Grade: 60 to 70 when tested on mounting No. 7, SS-S-118.

(c) Pattern: h, as indicated.

(d) Nominal Size: 24 by 24 by 3/4 inches.

(e) Edge Detail: Trimmed and butt.

(f) Finish: Factory-applied white vinyl paint and heat-cured.

(g) LR Grade: 1.

7.1.2 Tile for Concealed Accessible Grid System (Upward and Downward Access): Indicated on drawings as Acoustical Material "AM-2".

(a) Type: III.

(b) NRC Grade: 60 to 70 when tested on mounting No. 7, SS-S-118.

(c) Pattern: h, as indicated.

(d) Nominal Size: 12 by 12 by 3/4 inches.

(e) Edge Detail: Square.

(f) Joint Detail: Kerfed and rabbeted.

(g) Finish: Factory-applied white vinyl paint and heat-cured.

(h) LR Grade: 1.

7.1.3 Tiles for Concealed Accessible Grid System (Upward Access Only): Indicated on drawings as Acoustical Material "AM-3".

(a) Type: VII.

(b) Pattern: a, as indicated.

(c) NRC Grade: 55 to 65 when tested on mounting No. 7, SS-S-118.

(d) Nominal Size: 12 by 12 by 5/8 inches.

(e) Edge Detail: Kerfed and rabbeted.

(f) Finish: Baked white enamel, two coats on exposed surfaces, one coat on edges.

(g) LR Grade: 1.

7.2 Suspension Systems: Suspension systems shall be exposed-grid type conforming to heavy-duty system of ASTM C635 for Acoustical Material "AM-1", concealed accessible (upward or downward access) type conforming to intermediate-duty system of ASTM C635 for Acoustical Material "AM-2", and concealed

accessible (upward access only) type conforming to intermediate-duty system of ASTM C635 for Acoustical Material "AM-3". Modify suspension systems to accept speaker grille back box as required. Suspension systems shall be completely compatible with the acoustical units. Surfaces exposed to view shall be of uniform width and shall be aluminum or steel with a factory applied white baked enamel.

7.3 Edge or Wall Molding: Edge or wall molding shall be aluminum or steel with a factory applied white baked enamel finish. Wall molding shall have a flange of not less than 15/16 inch and shall be provided with inside and outside corner caps.

7.4 Wire: QQ-W-461, composition 1010 soft annealed, finish 5 (zinc coated), Class 1; except provide QQ-W-423, composition 302 or 304, Condition A annealed stainless steel wire or QQ-N-281, Class A, Form 7, nickel-copper-alloy wire for suspended ceiling under concrete roof slabs and where plenum is used for air-circulating systems. Wire shall be not less than 0.1055 inches in diameter (12 gage).

8. INSTALLATION: All interior finish work such as plastering or concrete work shall be completed and dry before installation. All mechanical, electrical, and other work above the ceiling line shall be completed and approved prior to the start of acoustical ceiling installation. Acoustical work shall be provided complete with all necessary fastenings, clips, and other accessories required for a complete installation. Mechanical fastenings shall not be exposed in the finished work.

8.1 Suspension Systems: Installation of suspension systems shall meet the requirements of ASTM C636. Hangers shall be laid out for each individual room or space. Hangers shall be placed to support framing around beams, ducts, columns, grills, and other penetrations through ceilings. Wherever the weight of a lighting fixture causes the total dead load to exceed the deflection capability of the ceiling suspension system, the fixture load shall be supported by supplemental hangers located as close as practicable to each corner of the fixture. Main runners and carrying channels shall be kept clear of abutting walls and partitions. At least two main runners shall be provided for each ceiling span.

8.1.1 Edge or Wall Moldings: Metal edge moldings or channels shall be provided along the perimeter of the acoustical ceiling in each room, space, or panel.

8.1.2 Ceiling Tiles: Edges of ceiling tiles shall be in close contact with metal supports, with each other, and in true alignment. Units shall be arranged so that units less than one half width are minimized. Install speaker grille acoustical units where indicated in accordance with approved shop drawings to meet the approval of the Contracting Officer.

---END---

SECTION 09531. SHEET LEAD SOUND BARRIER

1. APPLICABLE PUBLICATIONS: The following publications of the issues listed below, but referred to thereafter by basic designation only, form a part of this specification to the extent indicated by the references thereto.

1.1 Federal Specification:

QQ-L-201F & Am 2	Lead Sheet.

2. QUALITY CONTROL: Approvals, except those required for field installation, field application and field tests, shall be obtained before delivery of materials to the project site.

3. SUBMITTALS:

3.1 Tests and Certificates: The testing requirements for materials incorporated in referenced documents will be waived provided the Contractor submits certificates from the manufacturer stating that materials furnished for this project conform to all requirements of this specification and the referenced documents. Copies of the test reports need not be submitted except as specifically requested by the Contracting Officer.

3.1.1 Sample Certificate: The certificate shall not contain statements that could be interpreted to imply that the product does not meet all requirements specified, such as "as good as"; "achieve the same end use and results as materials formulated in accordance with the referenced specification"; "equal or exceed the service and performance of the specified material". The certificate should simply state that the product conforms to all requirements specified.

SAMPLE CERTIFICATE

The manufacturer hereby certifies that all following products being furnished for this project conform to all requirements of the project specifications and the respective reference specifications:

MANUFACTURER AND PRODUCT	REFERENCE SPECIFICATION
John Doe Company Sheet Lead Sound Barrier	QQ-L-201

SIGNATURE AND TITLE

3.2 Shop Drawings: Shop drawings shall be submitted and approved before delivery of materials to the site. Shop drawings shall show layout, elevation, sections, details, materials, dimensions, and all information necessary for installation.

3.3 Samples: The following samples of materials shall be submitted and approved before work is started.

(a) Sheet Lead Sound Barrier: Two units, 12 inches by 12 inches.
(b) Tape: One roll.
(c) Anchors: Two of each type.
(d) Staples: Two of each type.
(e) Sealant: One tube.

3.4 Manufacturer's Installation Procedures: Manufacturer's currently recommended installation procedures shall be submitted and approved. Installation procedures shall accompany shop drawings.

4. DELIVERY, STORAGE AND PROTECTION: Materials shall be delivered to the site in the original sealed containers or packages and shall bear the manufacturer's name and brand designation. Materials shall be stored and handled in a manner to protect them from damage during the entire construction period.

5. MATERIALS:

5.1 Sheet Lead Sound Barrier: Lead sheet, 1/64 inch thick, weight of 1 pound per square foot, supplied in rolls of 4 feet by 25 feet, with lead composition conforming to QQ-L-201, Grade C.

5.2 Tape: Pressure sensitive adhesive tape of type recommended by sheet lead sound barrier manufacturer.

5.3 Anchors: Type recommended by sheet lead sound barrier manufacturer, except explosive type fasteners not permitted.

5.4 Staples: Type and size as recommended by sheet lead sound barrier manufacturer.

5.5 Grounds: Fire retardant treated, of type and size indicated and specified under section entitled "Rough Carpentry".

5.6 Sealant: Type recommended by sheet lead sound barrier manufacturer.

6. INSTALLATION:

6.1 Inspection: Examine surfaces which receive sheet lead sound barrier. Report all unsatisfactory conditions. Do not commence work until all unsatisfactory conditions have been corrected. Commencement of work constitutes acceptance of surfaces. All mechanical, electrical, and all other work above the finished ceiling line shall be completed and approved prior to commencement of work.

6.2 Sheet Lead Sound Barrier: Wrap top edge of sheet lead sound barrier 1-1/2 turns around ground strip after notching the corners and folding back

onto the sheet 1-1/2 inches of each vertical edge to provide for an overlap joint at the starting wall and with the following sheet. Insert a strip of 3 inch wide tape against the underside of the fold leaving 1-1/2 inch exposed in preparation for joining to the following sheet. Fasten ground and the sheet to underside of slab with anchors spaced 8 inches on centers and 2 inches from each end of each ground. Insure sheet drapes from top edge of ground strip. On the following sheet allow for the 1-1/2 inch overlap at each end but do not fold back onto the sheet at the end to be joined to the first sheet. When the ground of the second sheet is butted against that of the first sheet, the mating edges of the two sheets will coincide. Fold the exposed half of the tape over the mating edge of the second sheet and set the adhesive by raising the seam and creasing the tape enclosing the overlapped edge of the two sheets. Secure by pinch stapling on 6 inch centers or folding over and crimp to form a standing seam. Provide drape at bottom of each sheet as detailed. Use tape or sealant around perimeter where necessary to provide air-tight fit. When sheet lead sound barrier is penetrated by ducts, slit the area diagonally, fold the flaps onto duct and tape in place. Fold and crimp vertical edges above and below the duct into tight standing seam. When sheet lead sound barrier is penetrated by pipes, fold a 1-1/2 inch vertical tuck at a point vertical to the point of penetration of pipe. Slit apex of tuck up from bottom of sheet to point of penetration and make orange peel slits to accommodate the pipe diameter. Drape lead sheet over obstruction and mold tabs tightly against same. Tape securely in place. Pinch together the slit edges and form a standing seam in the tuck above and below the obstruction. Repair or replace all damaged sheet lead sound barriers at no additional cost to the Government. The installed sheet lead sound barrier shall be air and sound tight.

---END---

SECTION 09562. SLAT FLOORING

1. APPLICABLE PUBLICATIONS: The following publications of the issues listed below, but referred to thereafter by basic designation only, form a part of this specification to the extent indicated by the references thereto:

1.1 Federal Specifications:

UU-B-790A Building Paper, Vegetable Fiber; (Kraft, Water-proofed, Water Repellent and Fire Resistant).

1.2 American Society for Testing and Materials (ASTM) Publications:

D226-75 Asphalt-saturated Roofing Felt for Use in Membrane Waterproofing and Built-up Roofing.

1.3 National Oak Flooring Manufacturer's Association (NOFMA) Publications:

Guide to Hardwood Flooring Grades, 1978 Edition.

2. QUALITY CONTROL: Approvals, except those required for field installations, field applications and field tests, shall be obtained before delivery of materials or equipment to the project site.

3. SUBMITTALS:

3.1 Samples: Before delivery of materials to the building site, samples of the following items in the quantities specified shall be submitted and approved before work is started.

(1) Slat Flooring: Four of specie and type specified.
(2) Adhesives: Two one-pint cans of each type.
(3) Premoulded Cork Strips: One 12-inch strip.
(4) Felt: Two pieces, 12 inches by width of roll.
(5) Building Paper: Two pieces, 12 inches by width of roll.
(6) Flooring Nails: Four of each type.

3.2 Certificates of Conformance: Unless specified otherwise, before delivery of materials, certificates, in triplicate, from the manufacturer, certifying that materials conform to requirements specified herein, shall be submitted and approved. Labels or marking affixed to manufacturer's products, attesting that products meet requirements specified herein, will be accepted in lieu of certificates.

4. DELIVERY AND STORAGE: Deliver all materials to the building site in original unopened packages, bundles, or containers. Protect them against dampness during shipment and after delivery. Store them under cover in a well-ventilated building where they will not be exposed to extreme changes of

temperature and humidity. Do not store materials in any buildings under construction until all wet-applied building materials are dry. Packages, bundles, or containers should not be opened until the flooring is to be installed.

5. ENVIRONMENTAL CONDITIONS: The temperature of the location in which strip flooring is to be laid and the location in which it is to be stored shall not exceed 70 degrees F or be below 50 degrees F, and the relative humidity shall not exceed 65 percent or be below 30 percent. When the interior relative humidity exceeds 65 percent during or after installation of flooring, sanding and finishing of job-finished flooring shall be delayed from two to three weeks after completion of laying, unless directed otherwise.

6. MATERIALS:

6.1 Single Slat Flooring: Single slat flooring shall be unfinished, Plain White Oak, Select and Better Grade conforming to NOFMA's "Guide to Hardwood Flooring Grades". Flooring shall have tongued and grooved sides, ends double grooved with solid oak splines. Each strip of flooring shall be 3/4 inch thick, 2-1/4 inches wide, 9 inches long. Pattern shall be "Single Herringbone". Single slat flooring shall be provided to match samples on display at the office of the Contracting Officer.

6.1.1 Moisture Content: Flooring shall have a moisture content of not less than 5 percent and not more than 12 percent at the time of shipment.

6.1.2 Finish: Flooring shall have a smooth surface and shall be without applied finish. Provide job finishing as specified herein.

6.2 Threshold: Plain White Oak. Shape and size shall be as indicated.

6.3 Premoulded Cork Strips: Cork strips shall be 3/8-inch wide by depth of flooring.

6.4 Primer: Type recommended by flooring manufacturer.

6.5 Adhesive: Type recommended by flooring manufacturer.

6.6 Nonstaining Fibrated Kraft Building Paper: UU-B-790, Type 1, Grade D.

6.7 Asphalt Saturated Felt: ASTM D226.

7. GENERAL REQUIREMENTS:

7.1 Single Slat Flooring on Concrete Slabs and Subflooring: The system shall consist, essentially, of the application of single slat flooring on concrete slabs and subflooring. The application shall be by means of adhesive on concrete slabs and by means of nails on subflooring.

7.2 Condition of Subfloors: Flooring shall not be installed on surfaces that are unsuitable and will prevent a proper installation.

7.2.1 On Concrete Slabs: Before any work is begun, all defects such as rough or scaling concrete, low spots and high spots, and uneven surfaces shall have been corrected, and all damaged portions of concrete slabs shall have been repaired. If concrete curing compounds or surface sealers have been applied to the concrete slabs they shall have been entirely removed from the slabs by approved sanding, or as recommended by flooring manufacturer. Level of concrete slabs shall be as specified in section entitled "Cast In Place Concrete".

7.2.2 On Subflooring: Damaged portions of subflooring shall have been repaired; defective subflooring shall have been replaced; and loose or warped subflooring shall have been renailed firmly, and protruding or loose nails shall have been driven flush and firm.

7.3 Preparation for Adhesive-Applied Single Slat Flooring: Concrete floor slab shall be swept clean. Spots of paint, plaster, masonry droppings, grease, dirt, and all other foreign matter shall be removed. Apply primer at a spread rate as recommended by the manufacturer. Over all primed areas, apply adhesive, at a spread rate recommended by manufacturer, and into adhesive lay one ply of felt lapping joints 2 inches. Apply second coat of adhesive, at a spread rate recommended by manufacturer, and apply second layer of felt, with felt joints staggered over the preceeding ply.

7.4 Prepareation for Nailed Wood Flooring on Subflooring: Subflooring over which nailed wood flooring is to be laid shall be covered with a layer of asphalt saturated felt. Lap all edges of felt at least 2 inches and turn felt up at least 2 inches behind baseboards.

8. INSTALLATION OF FLOORING:

8.1 General: The work of other trades shall be completed before starting work specified under this section.

8.2 Installation of Single Slat Flooring on Concrete Slabs: Over second layer of felt apply adhesive at a rate recommended by manufacturer. Into this adhesive apply slat flooring, in pattern specified and in accordance with the flooring manufacturer's printed instructions. Install splines in accordance with manufacturer's recommendations.

8.3 Installation of Single Slat Flooring on Subflooring: In applying slats with nails, lay slats with close joints when nailing them to subflooring. Drive slats firmly together and blind-nail each slat with at least two 7-penny spiral or screw type flooring nails, unless otherwise recommended by flooring manufacturer. Install splines in accordance with manufacturer's recommendations. Face nailing not permitted.

8.4 Expansion Spaces: Provide expansion spaces at walls and partitions and elsewhere as recommended by flooring manufacturer. Install premoulded cork strips in accordance with flooring manufacturer's directions.

8.5 Thresholds: Install thresholds in accordance with manufacturer's recommendations. Face nailing not permitted.

9. SANDING AND FINISHING SLAT FLOORING:

9.1 Sanding: Sand floors to smooth and level surfaces, free of sanding marks and in proper condition to receive the finish specified. After final sanding or buffing sweep floors clean. Wipe off all foot marks.

9.2 Finishing: Finishing of slat flooring shall be as specified in section entitled "Field Painting".

10. PROTECTION: After completion of laying, cover flooring immediately with the nonstaining fibrated kraft building paper. Edges of paper shall be taped.

---END---

SECTION 09650. RESILIENT FLOORING

1. APPLICABLE PUBLICATIONS: The following publications of the issues listed below referred to thereafter by basic designation only, form a part of this specification to the extent indicated by references thereto:

1.1 Federal Specifications:

RR-T-650A	Treads, Metallic and Nonmetallic, Nonskid.
SS-A-701B	Asphalt Primer (for) Roofing and Waterproofing.
SS-T-312B	Tile, Floor; Asphalt, Rubber, Vinyl, Vinyl-Asbestos.
SS-W-40A & Am 1	Wall Base; Rubber, and Vinyl Plastic.
MMM-A-110B & Am 2	Adhesive, Asphalt, Cut-Back Type (for Asphalt and Vinyl-Asbestos Tiles).
MMM-A-115B	Adhesive, Asphalt, Water Emulsion Type (for Asphalt and Vinyl-Asbestos Tile).

2. QUALITY CONTROL: Approvals, except those required for field installations, field applications, and field tests, shall be obtained before delivery of material or equipment to the project site.

2.1 Tests and Test Reports: The testing requirements incorporated in referenced documents will be waived provided the manufacturer submits certificates that previously manufactured materials have been tested by recognized laboratories, that such materials meet testing requirements specified and that the tested materials is of the same type quality, manufacture and make as that furnished for this project. Copies of the test reports need not be submitted except as specifically requested by the Contracting Officer.

3. SUBMITTALS:

3.1 Samples: The following samples of flooring materials in each color and pattern indicated or selected shall be submitted for approval before the work is started:

(1) Floor tile
(2) Wall base
(3) Stair treads
(4) Edging strips
(5) Floor finish

3.2 Selection of Colors and Patterns: Colors and patterns shall closely approximate colors and patterns indicated. Where colors and patterns are not indicated the Contractor shall submit duplicate sets of the manufacturer's standard color chips, not less than 3 by 3 inches, for each type of flooring and base to the Contracting Officer for selection.

(1) Field Tiles: Two of each type.

(2) Base: One 9-inch lengths of each type.
(3) Stair Treads: One 9-inch lengths of each type.
(4) Edging Strips: One 9-inch lengths of each type.

3.3 Manufacturer's Installation Procedures: Submit in triplicate, current copies of the flooring manufacturer's recommended standard installation procedure for each type of flooring material for approval before work is started.

3.4 Manufacturer's Maintenance Data and Instructions: Submit in triplicate, upon completion and prior to acceptance of the work, current copies of the flooring manufacturer's printed recommendations on maintenance methods and products for each type of flooring material.

4. DELIVERY AND STORAGE: Materials shall be delivered to the job in the manufacturer's original unopened containers, with the brands and names clearly marked thereon. All materials shall be carefully handled and shall be stored in their original containers at not less than 70 degrees F for at least 48 hours before work is started. Containers shall not be opened until inspected and accepted.

5. ENVIRONMENTAL CONDITIONS: Spaces in which flooring work is to be performed shall be maintained between 70 degrees F and 90 degrees F at the floor level for at least 48 hours prior to starting the work, during the time work is performed, and for at least 48 hours after the work is completed. A minimum temperature of 55 degrees F shall be maintained thereafter. Adequate ventilation shall be provided to remove moisture and fumes from the area.

6. EXTRA STOCK: Upon completion of work, deliver additional tile, base, and stair treads to the Government for use in repairs and maintenance. Additional materials of each color shall be from the same lot as the materials installed. Furnished tile, base, and stair treads in original boxes, properly marked, in quantities listed below, and with colors in approximately the same proportions as installed materials:

(1) Vinyl-Asbestos Tile: 150 pieces.
(2) Wall Base: 120 lineal feet.
(3) Premolded Internal Base Corners: 24 pieces.
(4) Premolded External Base Corners: 24 pieces.
(5) Stair Treads: 12 pieces.

7. MATERIAL: Accessories shall be the approved standard products of the manufacturer of the flooring. The color and pattern of tile shall be uniformly distributed throughout the thickness of the tile. Variation in shades and off pattern matches between containers will not be acceptable. Flooring in any one continuous area or that used in replacement of damaged flooring, in a continuous area, shall be from the same lot and have the same shade and pattern. All materials specified to be of a type as recommended by the manufacturer shall be subject to approval.

7.1 Vinyl-Asbestos Tile: SS-T-312, type IV, and shall be 12 by 12 inches by 1/8-inch thick.

7.2 Wall Base: SS-W-40, type II, styles A and B. Base shall be 4 inches high, 0.125-inch thick, in colors indicated. Base shall be sufficiently flexible to conform to irregularities in walls, partitions, and floors. Premolded corners in matching size, shape, and color shall be provided for all right-angle external and internal corners.

7.3 Stair Treads: RR-T-650, type A (rubber base), 1/4-inch nominal thickness, anti-slip commercial design.

7.4 Underlayment: Latex type as recommended by flooring manufacturer.

7.5 Primer: Cut-Back Type, SS-A-701.

7.6 Adhesives:

7.6.1 Adhesive for Vinyl-Asbestos Tile: MMM-A-110 and MMM-A-115.

7.6.2 Adhesive for Vinyl Wall Base: Special base adhesive as recommended by wall base manufacturer.

7.6.3 Adhesive for Stair Treads: Type as recommended by stair tread manufacturer.

7.7 Crack Filler:

7.7.1 Crack Filler for Concrete Floor Surfaces: Nonshrinking cement mortar.

7.7.2 Crack Filler for Walls: Type as recommended by the wall base manufacturer.

7.8 Floor Finish: Hospital grade, non-skid, non buff S.C. Johnson Wax Company's "Complete".

7.9 Edging Strips: Beveled vinyl plastic, as approved.

8. INSTALLATION:

8.1 Condition of Surfaces: Floor surfaces that are to receive flooring shall be clean, thoroughly dry, smooth, firm, and sound; and they shall be free from springiness, oil, paint, wax, dirt, curing compounds or any other damaging material.

8.2 Preparation of Surfaces:

8.2.1 Concrete Floor Surfaces: All ridges or other uneven surfaces shall be ground smooth. Cracks 1/16-inch or wider shall be cut out and filled

with a crack filler as specified for this application. Latex underlayment shall be provided to fill the remaining holes, cracks, and depressions, and for smoothing, leveling, or feather edging the concrete. Chalky or dusty surfaces shall be primed with an approved primer, recommended by the flooring manufacturer after cleaning and removal of all loose particles.

8.2.2 Moisture Test for Concrete Floors: After concrete floor surfaces have been cleaned, small patches of adhesive to be used shall be spread in several locations in each room and allowed to dry or "set" overnight. If the "set" adhesive can be peeled easily from the floor surfaces, the floor is not sufficiently dry. The test shall be repeated until the adhesive adheres properly. When the adhesive adheres tightly to the floor surface, the tile shall be applied. If concrete floors are in contact with the ground or over unventilated crawl spaces, small patches of primer shall be used in lieu of adhesive to test for moisture.

9. APPLICATION: Installation shall be deferred until all other work that might cause damage to the flooring has been completed. Flooring and accessories shall be applied in accordance with the approved installation procedure. Work shall be performed by workmen thoroughly experienced in the application of such flooring. Adhesives shall be as specified for the specific application. Adhesives shall be applied in accordance with the adhesive manufacturer's printed directions, unless specified or directed otherwise. Flooring shall be applied in the patterns indicated, starting in the center of the room or area, and working from the center towards the edges. Tile lines and joints shall be kept square, symmetrical, tight and even; and each floor shall be in a true, level plane, except where indicated as sloped. Edge width shall vary as necessary to maintain full-size tiles in the field, but no edge tile shall be less than one-half the field size, except where irregular shaped rooms make it impossible. Flooring shall be cut to, and fitted around, all permanent fixtures, built-in furniture and cabinets, pipes, and outlets. Edges shall be cut, fitted, and scribed to walls and partitions after field flooring has been applied. Edging strips shall be provided where flooring terminates at points higher than the contiguous finished flooring, except at doorways where thresholds are provided. Plastic strips shall be secured with adhesive.

9.1 Application of Vinyl-Asbestos Tile: Concrete slabs in contact with the ground or over unventilated crawl spaces shall be primed with cut-back-type primer. Primer shall be worked into the surface of the concrete, using the minimum quantity that will cover the surface completely with a nonabsorptive base. Primer shall be allowed to become thoroughly dry before adhesive is applied. Cut-back adhesive only shall be applied to primed concrete floor surfaces. Either cut-back or emulsion-type adhesive shall be applied to suspended concrete and hardboard surfaces. Tile joints shall not coincide with hardboard panel joints; do not fill joints between hardboard panels. Tile shall be carefully laid in the pattern indicated and fitted so that each tile is in contact with the adjoining tiles, and all joints are tight and in alignment.

9.2 Application of Wall Base: Wall base shall be applied after flooring has been completed, and the wall surface to which the base is to be applied is thoroughly dry. All cracks and voids in the wall shall be filled with a crack filler as specified for this application. Irregular surfaces shall brought to a smooth finish with a satisfactory smoothing compound. Special base adhesive shall be applied to the back of the base with a notched trowel, leaving approximately 1/4-inch bare space along the top edge of base. Where wall base is used in conjunction with vinyl wall covering, cut vinyl wall covering off at a point 1/4-inch below top of base and spread adhesive to the back of the base as specified herein. The base shall immediately be pressed firmly against the wall and moved gently into place, making sure that the toe is in contact with the floor surface and the wall. The entire surface of the base shall be rolled with a hand roller, and then the toe of the base shall be pressed firmly against the wall with a straight piece of wood. Internal and external corners shall be formed with base materials as specified herein.

9.3 Application of Stair Treads: Stair treads shall be carefully fitted and securely bonded with an approved adhesive.

10. CLEANING: Immediately upon completion of the installation in a room or an area, flooring and adjacent surfaces shall be dry-cleaned with an approved cleaner to remove surplus adhesive. No sooner than 5 days after installation, flooring shall be washed with an approved nonalkaline cleaning solution, rinsed thoroughly with clear cold water. After floor surfaces are completely dry, apply 3 coats of floor finish in accordance with floor finish manufacturer's recommendations. Bases and stair treads shall be cleaned but do not apply floor finish to bases and stair treads.

11. PROTECTION: From the time of laying until acceptance, flooring shall be protected from damage. Defects which develop, such as damaged, loose, broken, or curled tiles, shall be removed and replaced.

---END---

SECTION 09655. SEAMLESS FLOORING

1. APPLICABLE PUBLICATIONS: The following publications of the issues listed below, but referred to thereafter by basic designation only, form a part of this specification to the extent indicated by the references thereto:

1.1 Federal Specifications:

L-F-475A & Am 1 & Int Amd 2	Floor Covering, Vinyl Surface (Tile and Roll, With Backing).
SS-T-312B	Tile, Floor: Asphalt, Rubber, Vinyl, Vinyl-asbestos.

1.2 Federal Standards:

Fed. Std. 501A/GEN	Floor Coverings, Resilient, Nontextile Sampling and Testing.

1.3 American Society for Testing and Materials (ASTM):

E84-77	Surface Burning Characteristics of Building Materials.

2. QUALITY CONTROL: Approvals, except those required for field installation, field application and field tests, shall be obtained before delivery of materials to the project site.

3. SUBMITTALS:

3.1 Tests and Certificates: The testing requirements for materials incorporated in referenced documents will be waived provided the Contractor submits certificates from the manufacturer stating that materials furnished for this project conform to all requirements of this specification and the referenced documents. Copies of the test reports need not be submitted except as specifically requested by the Contracting Officer.

3.1.1 Sample Certificate: The certificate shall not contain statements that could be interpreted to imply that the product does not meet all requirements specified, such as "as good as"; "achieve the same end use and results as materials formulated in accordance with the referenced specification"; "equal or exceed the service and performance of the specified material". The certificate should simply state that the product conforms to all requirements specified.

SAMPLE CERTIFICATE

The manufacturer hereby certifies that all following products being furnished for this project conform to all requirements of the project specifications and the respective reference specifications:

"D2047-69 Static Coefficient of Friction of Polish-Coated Floor Surfaces as Measured by the James Machine."

MANUFACTURER AND PRODUCT | REFERENCE SPECIFICATIONS

John Doe Company
Polyvinylchloride Flooring
and Base | ASTM E84

SIGNATURE AND TITLE

3.2 Samples: The following samples of materials in each color and pattern indicated or selected shall be submitted for approval before the work is started.

(a) Flooring: Incorporate welded joint, 12 inches by 12 inches.

(b) Welding Rod: 12 inches long.

(c) Base: Cove mold, 12 inches long, incorporate welded joint.

(d) Base: Zero-edge reducing strip with flange at top of integral base, 6 inches long.

(e) Adhesive: One pint.

3.3 Manufacturer's Installation Procedures: Submit current copies of material manufacturer's recommended standard installation procedure for flooring material for approval before work is started.

3.4 Manufacturer's Maintenance Data and Instructions: Submit, upon completion and prior to acceptance of the work, current copies of flooring manufacturer's printed recommendations on maintenance methods and products for flooring material.

3.5 Shop Drawings: Shop drawings shall be submitted and approved before delivery of material to the site. Indicate on shop drawings the layout and joint pattern in each area to be covered with seamless flooring and base, showing material color and pattern and color of welding rods in joints. Shop drawings shall include details of installation of outside and inside corners of integral base. Drawings shall include details of zero-edge reducing strip with flange at top of integral base.

4. DELIVERY AND STORAGE: Materials shall be delivered to the job in the manufacturers' original unopened containers, with the brands and names clearly marked thereon. All materials shall be carefully handled and shall be stored in their original containers at not less than 70 degrees F for at least 48 hours before work is started. Containers shall not be opened until inspected and accepted.

09655

6.1 Seamless Flooring and Integral Base: Delete the second sentence and insert the following therefor: "Stock roll of flooring shall be approximately 50 feet long, not less than 48 inches wide, and 0.080 inch or 2.0 mm thick."

5. ENVIRONMENTAL CONDITIONS: Spaces in which flooring work is to be performed shall be maintained at 70 degrees F. at the floor level for at least 48 hours prior to starting the work, during the time work is performed, and for at least 48 hours after the work is completed. A minimum temperature of 65 degrees F. shall be maintained thereafter. Adequate ventilation shall be provided to remove moisture and fumes from the area.

6. MATERIALS:

6.1 Seamless Flooring and Integral Base: Flooring and integral base shall be homogeneous (non-layered) polyvinylchloride, provided with welding rods of the same material in matching or contrasting colors and being capable of being welded into a seamless covering. ~~Stock roll of flooring shall be 40 feet long, 48 inches wide, and 0.080 inches thick~~. Material shall comply with ASTM E84 (Hill-Burton/Hill-Harris). Integral base shall be a continuation of the flooring, turned up the wall 4 inches over a prefabricated cove molding and butted to a zero-edge reducing strip with flange. Seamless flooring and base shall be provided in the colors and patterns to match samples on display at the office of the Contracting Officer.

"6.1.1x Static Coefficient of Friction Test: Value shall not be less than 0.9 when tested according to ASTM D2047."

6.1.2 Indentation: Residual indentation shall be less than 6.4 percent in accordance with SS-T-312, Paragraph 3.5.2, Type III. Difference between initial thickness and thickness after recovery shall be not more than 0.0015 inches in accordance with L-F-475, Paragraph 3.6.

6.1.3 Flexibility: Material shall have complete flexibility permitting bending over itself 180 degrees without cracking or surface damage and shall pass requirements of Paragraphs 3.10.1 Type III, 3.10.1.1 and 3.10.1.2 of SS-T-312.

6.1.4 Dimensional Stability: Change in linear dimension in either direction shall be less than 0.06 percent in accordance with Paragraph 3.11, Type III of Federal Standard 501, Method 6211. Change in linear dimension in either direction shall be less than 0.07 percent in accordance with Paragraph 4.6.6 of L-F-475.

6.1.5 Flame Spread: When tested in compliance with ASTM E84 and of a material thickness of 0.080 inch, the rate of flame spread shall be 70 or less.

6.1.6 Fusion of Material: Welding rod and flooring material shall be fused at least 65 percent through thickness of material and shall meet the characteristics specified herein after welding.

6.1.7 Chemical Resistance: Minimum resistance characteristics to chemical exposure shall be as follows:

6.1.7.1 Notes: Refer to the Notes indicated by numerals in parentheses in the last three columns of the following tabulations of characteristics:

SYMBOL	EXPLANATION
(1)	Resistant
(2)	No Change
(3)	Limited Resistance
(4)	Unstable
(5)	Minimum Swelling
(6)	Minimum Swelling leaving permanent distortion
(7)	Slight Bluish Stain
(8)	Very Strong Bluish Stain

6.1.7.2 Tabulation of Chemical Resistance:

AGENT	CONCEN-TRATION	TEMPERATURE °C	RESIS-TANCE	RECORD AFTER REMOVING & CLEANING CHEMICALS FROM FLOOR: 1 Hour	24 Hours
Acetic Acid, Aqueous	6	20	(1)	(2)	(2)
Ammonia, Aqueous	Saturated	40	(1)	(2)	(2)
Boric Acid, Aqueous	Any	60	(1)	(2)	(2)
Carbon Dioxide	Any	40	(1)	(2)	(2)
Caustic Soda, Aqueous	4	40	(1)	(2)	(2)
Chromic Acid, Aqueous	0.5...10	20	(1)	(2)	(2)
Copper Sulfate, Aqueous	Any	60	(1)	(2)	(2)
Exhaust Gas- CO_2	Any	60	(1)	(2)	(2)
Exhaust Gas- HCL	Any	60	(1)	(2)	(2)
Ferric Chloride	Any	60	(1)	(2)	(2)
Glucose, Aqueous	Saturated	20	(1)	(2)	(2)
Hydrochloric Acid	Any	60	(1)	(2)	(2)
Hydrogen Bromide, Aqueous	Any	40	(1)	(2)	(2)
Hydrogen Peroxide	Up to 80	20	(1)	(2)	(2)
Nitric Acid, Aqueous	15	20	(1)	(2)	(2)
Oxygen	Any	60	(1)	(2)	(2)
Phosphoric Acid, Aqueous	Any	60	(1)	(2)	(2)

Photo Fixing Baths	Common Concentrate	40	(1)	(2)	(2)
Potassium Hydroxide Solution	15	20	(1)	(2)	(2)
Potassium Salts, Aqueous	Any	60	(1)	(2)	(2)
Sea Water	Normal	40	(1)	(2)	(2)
Silver Nitrate	10	60	(1)	(2)	(2)
Sodium Chloride	Any	60	(1)	(2)	(2)
Sulphuric Acid	Up to 60	60	(1)	(2)	(2)
Urea, Aqueous	Any	60	(1)	(2)	(2)
Urine		20	(1)	(2)	(2)
Acetic Acid	50	20	(3)	(2)	(2)
Acetyline	100	20	(3)	(2)	(2)
Butyric Acid, Aqueous	20	20	(3)	(2)	(2)
Diesel Oils-pressure oil	100	40	(3)	(2)	(2)
Ethylene Glycol	100	40	(3)	(2)	(2)
Glycol	100	40	(3)	(2)	(2)
Lead Acetate, Aqueous		20	(3)	(2)	(2)
Potassium Hydroxide Solution	Concentrated	20	(3)	(2)	(2)
Acetone	Any	20	(4)	(5)	(6)
Carbon Sulfide	100	20	(4)		
Ethyl Acetate	100	20	(4)	(2)	(2)
Methylene Chloride	100	20	(4)	(7)	(8)
Phenol, Aqueous	Any	20	(4)		

6.2 Welding Rod: 4 mm in diameter.

6.3 Underlayment and Adhesive: Type recommended by flooring manufacturer to meet the conditions of installation.

6.4 Cove Molding for Integral Base: Seamless flooring manufacturer's approved extruded plastic fillet strip, 3/4 inch radius, unless otherwise indicated.

6.5 Cleaning Material: Type recommended by flooring manufacturer.

7. INSTALLATION: Installation of seamless flooring and integral base shall be under the direct supervision of the material manufacturer's technical representative.

7.1 Inspection: Before commencing work, thoroughly examine all underlying and adjoining work, surfaces, and conditions upon which work is in any way dependent for perfect results. Report all conditions which affect the work. No "waiver of responsibility" for incomplete, inadequate, or defective or underlying and adjoining work, surfaces, and conditions will be considered, unless notice of such unsatisfactory conditions have been filed and agreed to in writing before work begins. Commencement of work constitutes acceptance of surfaces.

7.2 Cleaning: Remove all oil, grease, dirt, dust, debris, paint and other detrimental matter in accordance with material manufacturer's recommendations.

7.3 Preparation of Surfaces: All ridges or other uneven surfaces shall be ground smooth. Fill all holes and cracks with underlayment. Trowel with underlayment, if required, to allow flooring to finish flush with adjoining floors of other materials. Insure bar dividing strips are at proper height and location.

7.4 Cove Molding: Install cove molding at intersection of flooring and vertical surfaces. Miter all interior and exterior corners.

7.5 Seamless Flooring and Integral Base: Installation shall be deferred until all other work that might cause damage to the flooring has been completed. Materials shall be installed in accordance with the approved installation procedure. All joints shall be welded using equipment and procedures developed by the flooring manufacturer. Welding shall consist of routing out the joint, inserting welding rod of proper size into the routed joint, and thermally fusing the rod and each adjacent flooring unit into a homogeneous seamless unit. Install flooring material over cove and extend to indicated top of base and finish as indicated. Miter base at corners and weld joints with welding rod. Upon completion of the welding, the surface across the joint shall finish flush, free from recessed or raised areas. Upon completion, all flooring and base shall be completely adhered to the substrate throughout and free of bumps caused by installation over improperly prepared substrate and/or loose particles covered by the flooring. All joints shall be tightly fitted and welded throughout.

7.6 Cleaning and Finishing:

7.6.1 Cleaning: Remove excess adhesive and wash flooring and base surfaces with cleaning material. Cleaning material shall be applied to the surfaces in a diluted form by means of a scrubbing brush or by the use of a polishing machine with a red nylon buffing pad. Remove the dissolved dirt by dry mopping. Rinse surfaces with clean water and allow to dry. Remove stains in accordance with manufacturer's directions.

7.6.2 Finishing: Polish flooring and base surfaces with a white buffing pad. Buff only after surfaces are clean and dry.

7.7 Protection: Protect installed work in accordance with material manufacturer's recommendations.

7.8 Adjustments: Repair all work which has become damaged or defaced during the course of construction at no cost to the Government. Welded joints shall be examined to verify that no voids exist between the welds and the adjacent surfaces. Should voids exist, rewelding shall be performed so as to produce a monolithic surface free from voids at the welded seams and high and/or low spots.

---END---

SECTION 09682. CARPET

1. APPLICABLE PUBLICATIONS: The following publications of the issues listed below, but referred to thereafter by basic designation only, form a part of this specification to the extent indicated by the references thereto:

1.1 Federal Specifications (Fed. Spec.):

DDD-C-001023 (GSA-FSS) & Am 1	Cushion, Carpet and Rug (Hair Felt and Rubber Coated Jute and Animal Hair or Fiber)

1.2 American Association of Textile Chemists and Colorists (AATCC) Publications:

Test Method 134-1975	Electrostatic Propensity of Carpet

1.3 American Society for Testing and Materials (ASTM) Publications:

D1116-69	Resistance of Pile Floor Covering to Attack by Black Carpet Beetle Larvae.
E84-77	Surface Burning Characteristics of Building Materials

1.4 Underwriters' Laboratories, Inc. (UL) Publication:

992	Chamber Test Method of the Flame Propagation Classification of Flooring and Floor Covering Materials

2. CONTRACTOR EXPERIENCE: Installation shall be done only by a specialty contractor normally engaged in this work, and having done satisfactory work of this type for a minimum of five years. The work shall be done by qualified, experienced installers, working under a qualified supervisor. The supervisor shall have a minimum of five years experience in this area of work.

3. QUALITY CONTROL: Approvals, except those required for field installations, field applications and field tests, shall be obtained before delivery of materials to the project site.

4. SUBMITTALS:

4.1 Shop Drawings: Provide for approval installation shop drawings showing:

(a) Area to be carpeted.

(b) Location of seams.

(c) Moldings and edge strips and location thereof.

(d) Details of special treatments such as ducts and trench headers, and location thereof.

4.2 Certified Laboratory Test Reports: Before delivery of carpet, submit certified copies of the reports of tests specified herein for flammability and static propensity for approval. Testing shall have been performed by an independent testing laboratory within two years of submittal of the report for approval. Test reports shall be accompanied by certificates from the manufacturer certifying that the material is of the same type, quality, manufacture, and make as that tested.

4.3 Certificates of Conformance or Compliance: Before delivery of carpet, submit certificates from the manufacturer attesting that each carpet and separate carpet cushion meets the requirements specified and that the carpet contractor and installation supervisor have the required experience for approval.

4.4 Installation Instructions: Before installation, submit for approval the carpet manufacturer's printed instructions for installation of the carpet. Include complete procedures for an expert installation giving preparation of substrate, seaming techniques, recommended adhesives and tapes where applicable.

4.5 Maintenance Manual: Submit three copies of the carpet manufacturer's manual for maintenance. Include recommended type of cleaning equipment and materials, spotting and cleaning methods, and cleaning cycles.

4.6 Samples: Submit the following for approval:

(a) Two 12-inch by 18-inch minimum size samples of each carpet proposed for use, in the quality, pattern, and color specified.

(b) Two 12-inch square minimum size samples of separate carpet cushion when tackless installation method is specified.

(c) Two 12-inch long minimum pieces of vinyl moldings.

(d) Two samples of special treatment materials showing the system proposed for use and the proposed installation method.

5. DELIVERY AND STORAGE: Deliver carpet to the site in manufacturer's original wrappings and packages clearly labeled with the manufacturer's name, brand name, size, and related information. Register number shall be attached to each roll or stenciled on the bale and intact. Store in a safe, dry, clean, and well ventilated area, protected from damage, soiling, and moisture. Store rolls flat, not standing on end. Do not open containers until needed for installation unless verification inspection is required. Keep receiving records and carpet available for inspection by the Contracting Officer.

6. COLORS AND PATTERNS: Carpet shall be provided in the colors, patterns, and types to match samples on display at the Office of the Contracting Officer.

7. MATERIALS: Materials shall conform to the respective specifications and to the other requirements specified herein.

7.1 Carpet: All carpet in an area or an adjacent area shall be of same dye lot. The carpet system, carpet and cushion tested together as they will be used, shall have a flame spread rating of 75 or less when tested in accordance with ASTM E84, or shall have a flame propagation index of less than 4.0 when tested in accordance with UL992. Static control shall conform to AATCC 134; incorporate a permanent static control system to control static build-up to not less than 3.0 kV. Test at 20 percent relative humidity at 70 degrees F.

7.1.1 Carpet No. 1: Indicated on drawings as "Cpt-1", and adhesive applied to slabs. Carpet shall conform to the following:

(a) Surface Texture: Cut/uncut.

(b) Weave: Velvet - 5 harness double heddle woven through the back.

(c) Pitch: 216

(d) Stitches per Inch: 8.0.

(e) Pile Height: .255 inches.

(f) Face Yarn: 4 ply Antron III nylon.

(g) Dyeing System: Yarn Dyed.

(h) Face Yarn Weight: 34.7 ounces per square yard.

(i) Backing Materials: Polypropylene.

(j) Total Weight: 65.3 ounces per square yard.

7.1.2 Carpet No. 2: Indicated on drawings as "Cpt-2", and adhesive applied to slabs. Carpet shall conform to the following:

(a) Surface Texture: Velvet plush.

(b) Weave: Fusion bonded.

(c) Pitch: 9 per inch.

(d) Pile Height: 0.23 inches

(e) Face Yarn: 99% Enkalure II nylon.

(f) Face Yarn Weight: 28 ounces per square yard.

(g) Yarn Count: 2.15/2.

(h) Tufts per Square Inch: 72.

(i) Primary Backing: Vinyl, 50 ounces per square yard.

(j) Secondary Backing: Jute, 12 ounces per square yard.

(k) Total Weight: 90 ounces per square yard.

7.1.3 Carpet No. 3: Indicated on drawings as "Cpt-3"; carpet with separate cushion. Carpet shall conform to the following:

(a) Surface Texture: Velvet plush.

(b) Weave: Tufted.

(c) Gauge: 3/16-inch.

(d) Stitches: 54 per 6-inches.

(e) Pile Height: .500 inch.

(f) Face Yarns: 55 percent wool, 45 percent acrylic, moth repellency treated in accordance with ASTM D1116; wool shall have an insect resistance of not less than "Resistant".

(g) Face Weight: 60 ounces per square yard.

(h) Primary Back: Polypropylene.

(i) Secondary Back: Jute.

(j) Total Weight: 98 ounces per square yard.

7.2 Separate Carpet Cushion:

7.2.1 Rubber Coated Jute and Animal Hair for "Cpt-3": Fed. Spec. DDD-C-001023, Type 2, minimum 39 oz. per sq. yd.

7.3 Molding: Heavy-duty vinyl designed for the type of carpet being installed. Floor flange shall be minimum 2 inches wide. Color shall be as indicated.

7.4 Tackless Strip: Water-resistant plywood strips with rust-resistant angular pins with two or three rows of pins. For areas over 20 feet; use

tackless strips with three rows of pins. Provide pins of the proper length to penetrate through the carpet backing, but not so long as to be seen from the surface, or to be a safety hazard. Tackless strip shall be 9/32 inch or 3/8 inch thick, suitable for the cushion thickness specified or as recommended by the carpet manufacturer.

7.5 Adhesives: Waterproof, nonflammable, carpet adhesive system designed to facilitate easy removal of carpet at a later date as furnished or recommended by the carpet manufacturer. Seam adhesive shall be waterproof, nonflammable, and nonstaining as furnished or recommended by the carpet manufacturer.

8. INSTALLATION:

8.1 General: Install carpet after the work of other trades, including painting, is substantially done. Installed carpet shall be smooth, uniform, and secure, with a minimum of seams. Run side seams toward the light where practical and where such layout does not increase the number of seams. Install breachs parallel, with carpet pile in the same direction. Accurately match patterned goods. Fit cutouts, such as door jambs, columns, and ducts, neatly and securely. Locate carpet seams at doorways parallel to and centered directly under doors. Do not seam at doorways perpendicular to door or at pivot points. Follow the wall line parallel to the carpet direction for seams at corridor changes of direction.

8.2 Carpet Location: Install carpet wall-to-wall in rooms and areas indicated on drawings. Include all material indicated, specified, or necessary for a complete finished installation by the installation method specified. Contractor shall be responsible for the required quantities of carpet and shall carefully check all dimensions in the field as well as other conditions affecting the work.

8.3 Substrate Preparation: Inspect all rooms and areas to be carpeted. Before installation, test concrete floors for moisture content and take corrective measures, if necessary. Repair holes, cracks, depressions, or rough areas using material recommended by the carpet or adhesive manufacturer. Grind raised areas or ridges smooth and to a level surface. Floor shall be free of any foreign materials, swept broom clean, and damp mopped for "Cpt-1" and "Cpt-2". Minimum floor temperature before, during, and after installation and requirements for conditioning adhesive, shall comply with the carpet and adhesive manufacturers' instructions. However, in no case shall floor temperature be less than 60 degrees F for 24 hours prior to, during, and after installation. Do not permit traffic or movement of furniture or equipment in carpeted areas for at least 24 hours after installation. Carpet installation shall constitute validation by the Contractor that the substrate and conditions in the area meet all requirements for satisfactory installation.

8.4 Installation Methods:

8.4.1 Direct Gluedown without Cushion: Install in accordance with the carpet manufacturer's printed instructions.

8.4.2 Removable Carpet: Provide two removable pieces of carpet for each elevator scheduled to receive carpet. One piece of carpet shall be installed in each elevator, and one piece of carpet for each elevator shall be marked and stored as directed by the Contracting Officer. Removable carpet shall have all edges bound with binding tape sewn on carpet perimeter.

8.4.3 Tackless Method with Separate Cushion: Install in accordance with the carpet manufacturer's printed instructions. Fasten tackless strips to the substrate by the most appropriate method to give permanent holding qualities. Lay cushion in the largest possible lengths and widths using the minimum number of sections. Lay cushion flat, without bubbles or wrinkles. Bond cushion to concrete or other hard surfaces. Lay out the cushion so that seams do not fall directly under the carpet seams. Tape cushion seams for the entire length with minimum 2-inch wide cushion tape. Installation shall include restretching of the carpet during the warranty period at no additional costs.

8.4.4 Carpet Seams: Make uniform, unnoticeable, and permanent seams by the methods specified below. However, treat all joining edges, regardless of seaming method, with a seam adhesive. Seams shall have a minimum breaking strength of 100 pounds per inch and shall be capable of withstanding all carpet cleaning processes.

8.4.4.1 For "Cpt-1": Seams shall be of type as recommended by the carpet manufacturer.

8.4.4.2 For "Cpt-2": Seams shall be of type as recommended by the carpet manufacturer.

8.4.4.3 For "Cpt-3": Unless otherwise recommended by carpet manufacturer, use a hot melt system, compatible with the carpet backing and back coating. Seam strictly in accordance with the tape manufacturer's directions using first quality, minimum 4-inch wide hot melt tape. Carefully control iron temperature to protect carpet and carpet cushion.

8.4.5 Carpet Molding: Finish carpet edges meeting hard surface flooring with moldings. Install in accordance with manufacturer's instructions.

8.5 Usable Waste Pieces: Present all usable waste pieces of carpet to the Contracting Officer for inspection. Leave pieces selected by the Contracting Officer at the site in an orderly manner as directed. Remove all other waste.

8.6 Extra Carpet: In addition to the above, submit to the Contracting Officer at the completion of the project 2 percent of each color, pattern, and type.

9. CLEANING AND PROTECTION:

9.1 Cleaning: After installation, remove all debris, metal edging, scraps, and other foreign matter. Remove any soiled spots or adhesive from the face of the carpet with the appropriate spot remover. Remove any protruding face yarn with sharp scissors. Vacuum the carpet clean.

9.2 Protection: Carefully protect installed carpet from soiling and damage with heavy, reinforced, nonstaining kraft building paper or polyethylene film of an approved quality and thickness. Lap and secure edges of covering widths. Keep covering in repair and replace damaged portions. Protective covering shall be removed or left in place as directed by the Contracting Officer.

---END---

SECTION 09725. EPOXY TOPPING

1. APPLICABLE PUBLICATIONS: The following publications of the issues listed below, but referred to thereafter by basic designation only, form a part of this specification to the extent indicated by the references thereto:

1.1 American Society for Testing and Materials (ASTM) Publications:

C267-71	Chemical Resistance Mortars, Test for.
C307-61(1971)	Tensile Strength of Chemical-Resistant Resin Mortars, Test for.
C321-64(1971)	Bond Strength of Chemical-Resistant Mortars, Test for.
C413-75	Absorption of Chemical-Resistant Mortars, Test for.
C531-74	Shrinkage and Coefficient of Thermal Expansion of Chemical-Resistant Mortars, Test for.

2. QUALITY CONTROL: Approvals, except those required for field installations, field applications and field tests, shall be obtained before delivery of materials or equipment to the project site.

3. SUBMITTALS:

3.1 Tests and Certificates: The testing requirements for materials incorporated in referenced documents will be waived provided the Contractor submits certificates from the manufacturer stating that materials furnished for this project conform to all requirements of this specification and the referenced documents. Copies of the test reports need not be submitted except as specifically requested by the Contracting Officer.

3.1.1 Sample Certificate: The certificate shall not contain statements that could be interpreted to imply that the product does not meet all requirements specified, such as "as good as"; "achieve the same end use and results as materials formulated in accordance with the referenced specification"; "equal or exceed the service and performance of the specified material". The certificate should simply state that the product conforms to all requirements specified.

SAMPLE CERTIFICATE

The manufacturer hereby certifies that all following products being furnished for this project conform to all requirements of the project specifications and the respective reference specifications:

MANUFACTURER AND PRODUCT	REFERENCE SPECIFICATION
John Doe Company Epoxy Topping	ASTM C267

SIGNATURE AND TITLE

3.2 Shop Drawings: Shop drawings shall be submitted and approved before delivery of material to the site. Shop drawings shall indicate each room layout with location of expansion and control joints.

3.3 Samples: Submit for approval three 12 inch by 12 inch samples showing color of epoxy topping and joint filler for approval.

3.4 Manufacturer's Installation Procedures: Current copies of the topping manufacturer's recommended standard installation procedures, shall be submitted and approved before work is started.

3.5 Manufacturer's Maintenance Data and Instructions: Upon completion and prior to acceptance of the work, current copies of the topping manufacturer's printed recommendations of maintenance methods and products shall be submitted and approved before work is started.

4. DELIVERY AND STORAGE: Materials shall be delivered to the job in the manufacturer's original unopened containers, with the brands and names clearly marked thereon. Materials shall be stored at a temperature not lower than 50 degrees F. for at least 24 hours before installation. Containers shall not be opened until inspected and accepted.

5. ENVIRONMENTAL CONDITIONS: Spaces in which topping is to be applied, a temperature of at least 70 degrees F. shall be maintained from 48 hours before installation, during installation, and 3 days after installation. A minimum temperature of 55 degrees F. shall be maintained thereafter. Adequate ventilation shall be provided to remove volatile fumes. Finished work of other trades shall be protected from damage during installation of topping.

6. RELIABILITY OF APPLICATOR: Installation shall be performed by an applicator fully qualified in the application of materials to be used and approved by the manufacturer of the topping materials. The Contractor shall furnish the name of the applicator with data showing that the applicator is qualified as specified herein.

7. MATERIALS:

7.1 General: The trowelable, resinuous, thermosetting epoxy topping shall conform to the following:

	Epoxy Floor Surfacer	Epoxy Vertical Surfacer
Wet mortar density, lb./cu. ft.	132	125
Tensile strength, psi (ASTM C307)	2,287	2,352
Compressive strength, psi	12,613	12,437

Adhesion to concrete (ASTM C321)	Greater than strength of concrete	Greater than strength of concrete
Water Absorption, % (ASTM C413)	0.2	0.18
Coefficient of Expansion, in/in/^{o}F (ASTM C531)	$12x10^{-6}$	$23x10^{-6}$
Shrinkage, % (ASTM C531)	0.064	0.078
Color	Light gray	Light gray

7.2 Epoxy Primer: Epoxy primer shall be a two component, liquid resin type of binding epoxy floor topping to concrete surfaces.

7.3 Epoxy Floor Surfacer and Epoxy Vertical Surfacer: The topping shall be trowelable, resinous mortars conforming to the following:

(a) Be a three component system consisting of modified epoxy resin (weight/epoxide of 185 to 200) having a viscosity of 250 to 270 centipoise at 25 deg. C and a specific gravity of 1:11, a hardener essentially consisting of a polyolefin polyamine, such as diethylenetriamine; and a filler composed essentially of a mixture of ground quartz and silica.

(b) Be proven resistant to the chemical environment expected by test and graphs made in accordance with ASTM C267 with test applications in the environment.

(c) In 1/4 inch thickness shall prevent the penetration of the following chemicals under a one inch head for a minimum of 128 days.

(1) 30% sulfuric acid
(2) 25% sodium hydroxide
(3) Distilled water or deionized water

7.4 Sheathing Cloth: Sheathing cloth shall be a single ply of Volan treated, open weave, light twist, glass fabric.

7.5 Joint Filler:

7.5.1 Primer: Same as specified in paragraph entitled "Epoxy Primer".

7.5.2 Back-up Material: Back-up material shall be 60% closed cell, polyethylene foam.

7.5.3 Sealant: Sealant shall be a flexibleized 100% solids epoxy sealant, amine catalyzed, with an elongation of 50% to 75%, and with a Durometer hardness (A scale) of at least 60. Use pouring grade for horizontal

surfaces and calking grade for vertical surfaces. Color shall be gray. Sealant and epoxy topping shall be by same manufacturer.

8. INSPECTION OF CONCRETE SURFACES: Insure horizontal concrete surfaces are smooth, have a wood floated finish, free of all high and low spots, and sloped to drain. Insure that vertical concrete surfaces are smooth, free of air pockets and honeycombing, formed with clean plywood or steel forms, and are free of all oil or release agents. No curing agents shall be used on the finished concrete surfaces. Commencement of work constitutes acceptance of surfaces.

9. PREPARATION OF CONCRETE: Installation of epoxy topping shall not commence until the concrete substrate is a minimum of 28 days old. The concrete surfaces shall be swept clean and free of paint, wax, oil, grease or other materials that could affect the bonding of the applied topping. Concrete surfaces shall be sand blasted or acid washed with 20% HC1 to remove all laitance and then washed thoroughly with clean water and allowed to dry. Cracks or uneven areas shall be patched or repaired in a manner and with materials recommended by the topping manufacturer.

10. EXPANSION AND CONTROL JOINTS: Expansion and control joints in epoxy topping shall be located over joints in structural floors, where subfloor materials change, where epoxy topping abuts restraining surfaces such as perimeter walls and curbs, and at intervals of 20 feet each way in large areas. Locate expansion and control joints, for vertical application, over wall control and expansion joints, where back-up materials change, and at intervals of 20 feet in long walls.

11. INSTALLATION: All work shall be in strict accordance with the manufacturer's printed instructions.

11.1 Substrate Priming: After the concrete is thoroughly dry, horizontal surfaces shall be primed with primer, making sure that only the area is primed which can be topped while the primer is still tacky. If primed area cannot be finished while the primer is still tacky, the area must be primed again prior to the application of the topping. If the surface is porous and absorbs the primer, reprime before topping is applied. Do not prime vertical surfaces.

11.2 Application of Topping: Mix and apply epoxy floor surfacer in accordance with the directions of the manufacturer. Apply epoxy floor surfacer while primer is still tacky. The floor surfacer shall be applied in a single 1/4-inch thick coat on the floor areas. Single or multiple coats to 1/8-inch thickness on all vertical surfaces. Bases shall be coved type with radius cove and height of base indicated. All corners and edges shall be reinforced with sheathing cloth, extending 3 inches back from all corners and edges, sandwiched into the middle of the 1/4-inch floor application and into the middle of the 1/8-inch vertical application. The glass cloth shall be pre-wetted with a mixture of epoxy resin and hardener and the surface is to be tacky at the time of application. Finish shall be accomplished with one or

two passes of a steel trowel. Do not overwork. Expansion and control joints shall extend completely through the topping and a minimum of 1/4-inch wide with straight, vertical edges at the right angles with the floor. Joint filler and application of same shall be in strict accordance with manufacturer's printed specifications.

11.3 Curing: Shade area being finished from direct sunlight. Cure topping in accordance with manufacturer's recommendations.

---END---

SECTION 09910. FIELD PAINTING

1. APPLICABLE PUBLICATIONS: The following publications of the issues listed below, but referred to elsewhere by basic designation only, form a part of this specification to the extent indicated by the references thereto:

1.1 Federal and Military Specifications:

TT-C-535	Coating, Epoxy, Two Component, for Interior Use on Metal, Wood, Wallboard, Painted Surfaces Concrete and Masonry.
TT-C-542D & Am 2	Coating, Polyurethane, Oil Free, Moisture Curing.
TT-C-555B & Am 1	Coating, Textured (for Interior and Exterior Masonry Surfaces).
TT-E-489F & Int Am 1	Enamel, Alkyd, Gloss (for Exterior and Interior Surfaces).
TT-E-496B & Am 2	Enamel, Heat-Resisting (400 Degrees Fahrenheit), Black.
TT-E-508B & Am 4	Enamel; Interior, Semigloss, Tints and White.
TT-E-509B & Am 2	Enamel; Odorless, Alkyd, Interior, Semigloss, White and Tints.
TT-E-543A & Am 1	Enamel, Interior Undercoat, Tints and White.
TT-E-545B	Enamel, Odorless, Alkyd, Interior Undercoat, Flat, Tints, and White.
TT-F-336	Filler, Wood, Paste.
TT-F-1098D	Filler, Surface, Styrene-butadiene, Filler for Porous Surfaces (Cinder Block, Concrete Block, Concrete, Stucco, etc.)
TT-P-19C & Am 1	Paint, Acrylic Emulsion, Exterior.
TT-P-28E	Paint, Aluminum, Heat Resisting (1200 Degrees Fahrenheit.)
TT-P-29J	Paint, Latex-base, Interior, Flat, White and Tints.
TT-P-30	Paint, Alkyd, Odorless, Interior, Flat, White and Tints.
TT-P-641	Primer Coating; Zinc Dust-zinc Oxide (for Galvanized Surfaces).
TT-P-645	Primer, Paint, Zinc-chromate, Alkyd Type.
TT-P-00791B & Am 2	Putty: Linseed-oil, Type (for Wood-sash Glazing).
TT-P-650	Primer Coating, Latex Base, Interior, White (for Gypsum Wallboard).
TT-P-1511A & Am 1	Paint, Latex-base, Gloss and Semi-gloss, Tints and White (For Interior Use).
TT-P-1728A	Paint, Latex-base, Flat, Deep Tone.
TT-S-179B	Sealer, Surface, Pigmented Oil, (for Plaster and Wallboard.)
TT-S-711	Stain; Oil Type, Wood, Interior.
TT-V-85	Varnish, Oil, Flat, Brush or Spray.

TT-V-119D & Am 1	Varnish, Spar, Phenolic Resin.
MIL-S-12935D	Sealer, Surface, for Knots.
MIL-P-15328C & Am 1	Primer (Wash), Pretreatment Blue (Formula No. 117-8 for Metals).

1.2 Federal Standard:

Fed. Std. 595a & Am 3	Colors.

1.3 National Fire Protection Association (NFPA):

101-76	Code for Safety to Life from Fire in Building and Structures.

2. QUALITY CONTROL: Approvals, except those required for field installation, field application and field tests, shall be obtained before delivery of materials to the project site.

2.1 Standards Compliance: All paints and finishes specified herein shall conform to "Class A Interior Finish" classification of NFPA 101. All paints and finishes specified herein which are located in food handling areas, kitchen areas, food preparation areas, food storage areas, etc., shall be United States Department of Agriculture, Food and Drug Administration, and United States Public Health Service approved paints and finishes.

3. SUBMITTALS:

3.1 Sampling and Testing: Sampling and testing of paint as specified herein shall be provided whenever the required quantity of any one type of coating exceeds 50 gallons. Paints proposed for use shall be sampled from material delivered to the job site and tested by a recognized, independent testing laboratory, approved by the Contracting Officer, at the Contractor's expense. Paint proposed for use shall be stored on the project site in sealed and labeled containers, sufficiently in advance of need to allow a minimum of 30 days for testing. Upon notification by the Contractor that the material is at the site, a one-quart sample of each batch shall be obtained by random selection form the sealed containers by the Contractor's Quality Control Representative. Adequate mixing prior to sampling shall be accomplished to insure a uniform representative sample. A batch is defined as that quantity of material processed at one time and identified by a number, intended use, and quantity involved. Testing shall include all tests specified in the standard specification for the paint and all requirements specified herein, specifically including composition of both pigment and vehicle, and quantitative and qualitative requirements for mixed paint. Other samples will be taken from paints being used on the job and tested by the Government.

3.2 Tests and Certificates: When the quantity required is less than 50 gallons, the Contractor shall submit certificates from the manufacturer

stating that previously manufactured materials have been tested by recognized laboratories, that such materials meet testing requirements in referenced specifications and that the material furnished for this project is of the same type, quality, manufacture, and make as that tested. Copies of the test reports need not be submitted except as specifically requested by the Contracting Officer.

3.2.1 Sample Certificate: The certificate shall not contain statements that could be interpreted to imply that the product does not meet all requirements specified, such as "as good as"; "achieve the same end use and results as materials formulated in accordance with the referenced specification"; "equal or exceed the service and performance of the specified material". The certificate should simply state that the product conforms to all requirements specified.

SAMPLE CERTIFICATE

The manufacturer hereby certifies that previously manufactured materials have been tested by recognized laboratories, that such materials meet the requirements specified, that the materials being furnished for this project are of the same type, quality, manufacture, and make as those tested, and that the materials conform to all requirements of the respective reference specification:

MANUFACTURER AND PRODUCT	RERERENCE SPECIFICATION
John Doe Company	
Exterior Enamel No. 5	TT-E-489F
Interior Latex No. 6	TT-P-29J

SIGNATURE AND TITLE

3.4 Samples: One finished sample of each substrate material scheduled as having a "PS-7", "PS-8", and "PS-9" finish shall be submitted and approved before work is started. Samples shall be submitted in sufficient number and submissions until the desired finish is obtained and approved.

3.5 Approval of Materials: No paint or other coating shall be applied before required test reports, certificates, and requests for substitutions have been submitted and the respective material approved for use on this project. All requests for substitutions shall be submitted to the Contracting Officer for approval. Each such request shall include specific identification of the proposed substitute, justification for the necessity of the substitution, certified test reports of the proposed substitute, including all tests required by the specification for the substituted material, and a tabulation of the specified material compared to the proposed substitute. The tabulation shall include all tests, composition of both pigment and vehicle, and quantitative and qualitative requirements required for both the specified and the proposed material; any deviations from specified requirements shall be clearly indicated. Any paints or other coatings that are applied before the

paints or coatings are approved are subject to disapproval and, if so disapproved, shall be completely removed and surfaces restored to a condition suitable for specified paints or coatings.

4. DELIVERY AND STORAGE: Paints and paint materials shall be delivered in unbroken original packages bearing the manufacturer's name and brand designation, specification number, batch number, color, date of manufacture, and manufacturer's instructions for application. Storage of paints and paint materials and the mixing of paints shall be restricted to the locations directed.

5. GENERAL REQUIREMENTS: Hardware, hardware accessories, machined surfaces, plates, lighting fixtures, and similar items in contact with painted surfaces and not to be painted shall be removed, masked, or otherwise protected prior to surface preparation and painting operations. Following completion of painting, removed items shall be reinstalled. Such removal and reinstalling shall be done by workmen skilled in the trades involved. Surfaces to be painted shall be thoroughly cleaned and, unless specified otherwise, shall be dry when paint is applied. Paint shall not be applied to surfaces upon which there is frost, ice, or snow. Interior areas shall be broom-clean and dust-free before and during the application of painting material. Wood and metal surfaces which will be inaccessible after erection shall be treated and primed prior to erection, using two coats of the designated primer. Painting materials shall be worked thoroughly into all joints, crevices, and open spaces. Succeeding coats of paint shall vary sufficiently in shade from the color of the preceding coat to permit ready identification. Finished surfaces shall be smooth, even, and free of defects. Damaged painting shall be retouched before applying succeeding coats of paint. Surfaces to be embedded in concrete and factory-finished materials shall not be field-painted under this section, except that factory-finished surfaces which are damaged during installation shall be restored to their original condition. Reduction of paints to proper brushing consistency shall be accomplished by adding fresh paint; except that when thinning is mandatory for the type of paint being used, written permission to use thinners shall be obtained from the Contracting Officer. The written permission shall include quantities and types of thinners to use. Thinners shall not be permitted upon the job site unless written permission for thinning has been given by the Contracting Officer.

5.1 Selection of Colors: Colors of finish coats shall be as indicated. Where colors are not indicated the colors shall be as selected by the Contracting Officer from Fed. Std. No. 595.

5.2 Deep Tone Colors: Where deep tone colors are indicated and TT-P-29 is specified, use deep tone latex, TT-P-1728, in lieu of TT-P-29.

5.3 Eggshell Finish: Where eggshell finish is indicated or specified, the specification for the finish coat material shall be modified to require a 60-degree specular glass range of 6 to 30.

6. PREPARATION OF SURFACES: All dirt, rust, scale, splinters, loose particles, grease, oil, and other deleterious substances shall be removed from all surfaces which are to be painted or otherwise finished. Putty and calking compound shall be allowed to set one week before painting. Surfaces shall be inspected and approved after preparation and before application of any coatings. Exposed nails and other ferrous metal on surfaces to be painted with water thinned paints shall be spot primed with zinc chromate primer, TT-P-645.

6.1 Hardboard Surfaces: Hardboard surfaces shall be dry and clean prior to application of the specified first-coat material. Oil, grease, or stains shall be carefully removed by the use of suitable solvents. Wire brushing shall not be permitted. After first coat becomes dry, and prior to application of finish coats, touch-up coats shall be applied to suction spots.

6.2 Wiping of Surfaces: After all other cleaning operations and wire brushing and sanding are completed, all previously painted surfaces that are to receive oil-based coatings, except stucco and similarly rough surfaces, shall be wiped down with clean rags saturated with mineral spirits and allowed to dry. Such wiping shall immediately precede the application of the first coat of any coating, unless specified otherwise.

6.3 Wood Surfaces:

6.3.1 Painted Surfaces: Surfaces shall be free from dust and in an approved condition to receive the paint or other finish. The use of water on unpainted wood shall be avoided. Prior to application of paint, knots and resinous wood shall be treated with an application of knot sealer, MIL-S-12935. Puttying of cracks and nailholes shall be done after the priming coat has been applied and has dried properly. Woodwork shall be given the priming coat immediately following delivery to the job site. All nail heads shall be set and putty stopped. Where checking of the wood is present, the surface shall be sanded down smooth, wiped, and a coat of pigmented orange shellac shall be applied and allowed to dry before further paint is applied. Open joints and all other openings shall be filled with whiting putty, TT-P-00791, and sanded smooth after it has dried. Unless otherwise authorized, painting shall proceed only when the moisture content of wood does not exceed 12 percent as measured by a moisture meter.

6.3.2 Surfaces Scheduled to Receive "PS-7", PS-8, AND PS-9" Finish: Surfaces shall be properly prepared to receive finish specified. Surfaces scheduled to be stained shall be stained to the approved shade. Apply wood filler, where scheduled, in accordance with manufacturer's recommendations. Excess filler shall be removed and the surface sanded smooth. Sealer coats, where scheduled, shall be given such additional touch-up coats as may be necessary to eliminate dull spots. Excess sealer shall be wiped off following each application. Sanding, before finish is applied, between coats of

finishes, and after finish is applied, shall be in accordance with material manufacturer's recommendations to obtain the desired finish. Prepare wood veneer surfaces for operable walls in accordance with veneer manufacturer's recommendations.

6.4 Concrete and Masonry: Dirt, fungus, grease, and oil shall be removed prior to application of paint. New surfaces shall be washed with a solution composed of from 2 to 8 ounces of trisodium phosphate per gallon of hot water and then rinsing thoroughly with fresh water, unless otherwise recommended by paint manufacturer. Glaze, all loose particles, and scale shall be removed by wire brushing. Efflorescence shall be removed by scraping, wire brushing and washing with a 5- to 10 percent, by weight, solution of muriatic acid and then washing thoroughly with fresh water, removing all traces of the acid. All new surfaces to be painted with other than cement-water paint shall be given a neutralizing treatment consisting of 2 pounds of zinc sulphate in one gallon of warm water. The neutralizer shall be applied liberally and allowed to dry, after which the surfaces shall be rinsed thoroughly with clean water and allowed to dry for not less than 48 hours before paint is applied.

6.5 Wallboard and Plaster: Prior to painting, all joints, cracks, holes, and other surface defects shall be repaired with patching plaster or spackling compound and sanded out smooth. New plaster to be painted shall have an instrument-measured moisture content of not more than 8 percent. In addition to moisture content requirements, new plaster shall be allowed to age a minimum of 30 days before application of coatings.

6.6 New Metal Surfaces to be Painted, Except Hot Metal Surfaces: Surfaces, including aluminum, brass, copper, and zinc-coated surfaces and unprimed steel and iron surfaces, immediately after being cleaned, shall be given one coat of pretreatment coating, MIL-P-15328, applied to a dry film thickness of 0.2 to 0.5 mil. Zinc-coated surfaces to be painted shall be solvent cleaned with mineral spirits and wiped dry with clean dry cloths prior to application of pretreatment coating. Aluminum surfaces to be painted shall be treated with a hot 10-percent solution of chromic acid for 3 to 5 minutes and thoroughly rinsed with clean warm water prior to application of the pretreatment coating. Primer paint shall be applied over the pretreatment coating as soon as practicable after the coating has dried.

6.7 New Hot Metal Surfaces:

6.7.1 Surfaces Subject to Temperatures of 120 to 400 Degrees Fahrenheit: New surfaces shall be cleaned down to clean bare metal free of mill scale, rust, oil, oxides, dust, paint and other contaminates. New coatings shall be applied before any new oxidation or contamination begins.

6.7.2 Surfaces Subject to Temperatures Above 400 Degrees Fahrenheit: New surfaces shall be cleaned down to clean bare metal free of mill scale, rust, oil, oxides, dust, paint and other contaminates. New coatings shall be applied before any oxidation or contamination begins.

7. WORKMANSHIP AND APPLICATION:

7.1 Application: The finished surfaces shall be free from runs, drops, ridges, waves, laps, brush marks, and variations in colors. Coatings shall be applied carefully with good, clean brushes or approved spray equipment, except as specified otherwise. Area made inaccessible to brushing by ducts and other equipment shall be sprayed. Spray equipment shall be the airless type. Approved rollers may be used for the application of latex coatings to interior walls and ceilings. The work shall be so conducted as to avoid contamination of other surfaces work shall be so conducted as to avoid contamination of other surfaces and public and private property in the area; any damage thereto shall be made good by the Contractor at his expense. Sufficient time shall be allowed between coats to permit thorough drying, and each coat shall be in proper condition to receive the next coat. Each coat shall be sufficiently heavy to cover completely the preceding coat or surface; there shall be an easily perceptible difference in shades of successive coats of paint. Exterior paint shall not be applied in foggy or rainy weather or when the temperature of the air or of the surface is below 45 degrees Fahrenheit or over 95 degrees Fahrenheit, unless approved by the Contracting Officer. Interior paint shall be applied when the surfaces to be painted are dry and the temperature can be kept above 45 degrees Fahrenheit during the application of ordinary paints, and between 65 degrees Fahrenheit and 95 degrees Fahrenheit during the application of enamels and varnishes. Paint shall not be applied when the surfaces are not in proper condition for painting. Manufacturer's instructions for surface preparation, application, curing and drying time between coat for epoxy and polyurethane coatings shall be followed.

7.2 Special Requirements for Painting Masonry and Concrete Surfaces With Acrylic Emulsion Paint:

7.2.1 Mixing of Fill Coat: The formula given in TT-P-19 for the content of the fill coat requires a definite amount of water to be added in preparation of the mixture. This requirement shall not apply. The sand, cement, and acrylic liquids shall each be delivered preproportioned and packaged so that field proportioning will not be required. The acrylic liquid shall be field-mixed with the sand and cement, and after this mixture is thoroughly blended, water shall be added as necessary to produce a rich, creamy mixture of proper brushing consistency. The fill coat materials shall be mixed by hand but not vigorously agitated. After mixing, it shall be allowed to set for ten minutes to permit air to escape before applying. The fill coat mixture will gradually thicken with time and addition of small amounts of water, and additional stirring shall be accomplished when necessary to keep the mixture a rich brushing consistency. Mixing shall begin not more than one hour before application.

7.2.2 Wetting of Surfaces: Before applying filler coat, the masonry and concrete shall be thoroughly wetted to control surface suction and provide a reserve of moisture to aid in curing the paint. A garden hose nozzle adjusted

to a fine spray is adequate for the purpose. Dampening with a brush dipped in water is not acceptable. The masonry and concrete shall be dampened in one operation not more than one hour nor less than 30 minutes before painting. The spray shall be applied in such manner that each part is sprayed 3 to 4 times for about 10 seconds, time being allowed between applications for the water to soak into the surface. If the surface tends to dry rapidly, as in hot weather, it shall be redampened slighly just in advance of painting. The surface shall be moist but without free water when paint is applied.

7.2.3 Application: No painting shall be done when the paint may be exposed to temperatures below 40 degrees Fahrenheit within 48 hours after application or when the temperature is over 95 degrees Fahrenheit. Paint shall not be applied during rainy weather or when the surfaces are not in proper condition for painting. The filler coat shall be rubbed into the surface in such a manner as to fill all depressions, holes, voids, joints, and hollows. The filler coat shall be applied with short, stiff fiber bristle brushes with bristles not longer than 2-1/2 inches, using a circular motion. After scrubbing in the filler coat so that all voids are filled, the surface shall be given a final stroke parallel to the course of block. Coverage shall be uniform and laps well brushed out. The first finish coat shall be applied at a rate of not less than one gallon per 250 square feet, and the second finish coat shall be applied at the rate of not less than one gallon per 300 square feet. Finish coats shall be brush applied, except that behind large ducts and similar locations inaccessible to a brush they may be applied by rollers. Spray application will not be permitted. All paint shall be delivered to the job site prior to application. The Contractor shall compute the amount of finish coat paint required and submit his calculations for approval. No painting shall be commenced until this amount has been approved and delivered to the job site. All delivered paint shall be applied. Paint shall be kept in tightly covered containers when not in use and shall be kept stirred to maintain uniform color and consistency during application. At least 24 hours shall lapse between coats and in no case shall another coat be started until the preceding coat has become so hard that it cannot be marked with the brushes used. In hot weather, the prior coat shall be slightly moistened before applying the succeeding coat. Covering is not necessary.

8. SCOPE: Exterior painting specifically includes all surfaces of the types listed mounted on or a part of the roofs. Surfaces concealed by portable objects and by articles mounted on the surfaces and readily detachable by removal of fasteners such as screws and bolts are included in the work but surfaces concealed and made inaccessible by panelboards, fixed ductwork, machinery, equipment fixed in place, etc., are not included. Articles obstructing access to those surfaces specified to be included in the work shall be removed for access and restored to their original position on completion. Copper, stainless steel and aluminum will not require painting except where specifically so stated. Work in concealed spaces is not required to be painted unless specifically so stated herein. Concealed spaces are defined as spaces above suspended ceilings, attic, crawl spaces, furred spaces and chases. The paint coats specified herein are in addition to the coatings specified hereinbefore. Coatings having a lead content of over 0.06% by

weight of nonvolatile content shall not be used. The surfaces to be painted hereunder include new surfaces and previously painted existing surfaces that are damaged during performance of work. New surfaces shall receive the following coatings conforming to the respective specifications listed. Paints, primers, varnishes, enamels and undercoats shall be applied to a dry film thickness of not less than 1.0 mil each coat except as specified otherwise. Where coating thickness is specified it is the minimum dry film thickness.

8.1 Scheduled Finishes: The locations of paint systems specified below are indicated on the "Finish Schedule" and "Room and Building Finish Schedule".

8.1.1 "PS-1":

One coat of latex base primer, TT-P-650.
One coat of enamel undercoat, TT-E-545.
One coat of interior semigloss enamel, TT-E-509.

8.1.2 "PS-2":

One coat of latex base primer, TT-P-650
One coat of flat alkyd paint, TT-P-30.
One coat of flat alkyd paint, TT-P-30.

8.1.3 "PS-3":

One coat of latex base primer, TT-P-650.
One coat of epoxy coating, TT-C-535.
One coat of epoxy coating, TT-C-535.

8.1.4 "PS-4":

One coat of filler, TT-F-1098.
One coat of epoxy coating, TT-C-535.
One coat of epoxy coating, TT-C-535.

8.1.5 "PS-5":

One coat of latex base primer, TT-P-650.
One coat of latex base semi-gloss, TT-P-1511, Type I.
One coat of latex base semi-gloss, TT-P-1511, Type I.

8.1.6 "PS-6":

One coat of surface sealer, TT-S-179.
One coat of spray textured coating, TT-C-555, type I.

8.1.7 "PS-7":

One coat of walnut wood stain, TT-S-711.
One coat of polyurethane coating, TT-C-542, Type 1, Class 1.
One coat of polyurethane coating, TT-C-542, Type 1, Class 1.
One coat of polyurethane coating, TT-C-542, Type 1, Class 1.

8.1.8 "PS-8":

One coat of paste wood filler, TT-F-336.
One coat of satin varnish, TT-V-119.
One coat of satin varnish, TT-V-119.
One coat of satin varnish, TT-V-119.

8.1.9 "PS-9":

One coat of sanding sealer, TT-S-176.
One coat of dull varnish, TT-V-85.
One coat of dull varnish, TT-V-85.

8.1.10 "PS-10":

One coat of acrylic emulsion paint, TT-P-19.
One coat of acrylic emulsion paint, TT-P-19.

8.1.11 "PS-11":

One coat of filler, TT-F-1098.
One coat of interior semigloss enamel, TT-E-509.
One coat of interior semigloss enamel, TT-E-509.

8.1.12 "PS-12":

One coat of epoxy coating, TT-C-535.
One coat of polyurethane coating, TT-C-542, Type 1, Class 1.
One coat of polyurethane coating, TT-C-542, Type 1, Class 1.
While coating is still tacky, sprinkle 50 mesh dry washed silica sand in a random pattern over top coat in a fashion to obtain traction.

8.1.13 "PS-13":

One coat of acrylic emulsion paint, TT-P-19.
One coat of acrylic emulsion paint, TT-P-19.

8.1.14 "PS-14":

Touch up shop prime coat on shop primed surfaces, TT-P-645.
One coat of primer, TT-P-645, on surfaces not shop primed.
One coat of enamel undercoat, TT-E-543.
One coat of semigloss enamel, TT-E-508.

8.1.15 "PS-15":

Touch up shop prime coat on shop primed surfaces, TT-P-645.
Two coats of primer, TT-P-645, on surfaces not shop primed; one coat of primer, TT-P-645, on shop primed surfaces.
One coat of enamel, TT-E-489.
One coat of enamel, TT-E-489.

8.1.16 "PS-16":

Touch up shop prime coat on shop primed surfaces, TT-P-641.
One coat of primer, TT-P-641, on surfaces not shop primed.
One coat of enamel, TT-E-489.
One coat of enamel, TT-E-489.

8.1.17 "PS-17":

Touch up shop prime coat on shop primed surfaces, TT-P-645.
One coat of primer, TT-P-645, on surfaces not shop primed.
One coat of spraying enamel undercoat, TT-E-543.
One coat of spraying semigloss enamel, TT-E-508.

8.2 Painting and Finishing Miscellaneous Surfaces:

8.2.1 Exterior Surfaces:

8.2.1.1 Ferrous Metal Surfaces:

Touch up shop prime coat on shop primed surfaces, TT-P-645.
Two coats of primer, TT-P-645, on surfaces not shop primed; one coat of primer, TT-P-645, on shop primed surfaces.
One coat of enamel, TT-E-489.
One coat of enamel, TT-E-489.

8.2.1.2 Non-ferrous Metal Surfaces:

Touch up shop prime coat on shop primed surfaces, TT-P-641.
Two coats of primer, TT-P-641, on surfaces not shop primed; one coat of primer, TT-P-641, on shop primed surfaces.
One coat of enamel, TT-E-489.
One coat of enamel, TT-E-489.

8.2.2 Interior Surfaces:

8.2.2.1 Hardboard Surfaces:

One coat of latex base primer, TT-P-650.
One coat of flat alkyd paint, TT-P-30.

8.2.2.2 Wood and Plywood Surfaces:

One coat of enamel undercoat, TT-E-545.
One coat of interior semigloss enamel, TT-E-509.

8.2.2.3 Ferrous Metal Surfaces:

Touch up shop prime coat on shop primed surfaces, TT-P-645.
One coat of primer, TT-P-645, on surfaces not shop primed.
One coat of enamel undercoat, TT-E-545.
One coat of interior semigloss enamel, TT-E-509.

8.2.2.4 Non-ferrous Metal Surfaces:

Touch up shop prime coat on shop primed surfaces, TT-P-641.
One coat of primer, TT-P-641, on surfaces not shop primed.
One coat of enamel undercoat, TT-E-545.
One coat of interior semigloss enamel, TT-E-509.

8.2.2.5 Cloth and Paper Covering on Insulation:

One coat of glue size.
One coat of suitable primer.
One finish coat to match adjacent surfaces.

8.2.2.6 Existing Surfaces Damaged During Performance of the Work Including New Patches in Existing Surfaces:

One coat of suitable primer.
One coat of undercoat or intermediate coat.
One finish coat to match adjacent surfaces.

8.3 Mechanical, Electrical, and Miscellaneous Metal Items, Except Hot Metal Surfaces and New Prefinished Equipment: Painting of new mechanical and electrical equipment is specified in the section covering the particular item. Copper pipe exposed in interior spaces shall be painted.

Coating systems as specified hereinbefore.
Color of finish coat to match adjacent surfaces.

8.3.1 Surfaces Not Adjacent to Painted Surfaces:

One coat of primer, TT-P-645.
Two coats of enamel, TT-E-489.

8.3.2 Ferrous Piping Under Insulation or in Concealed Spaces:

One coat of pretreatment, MIL-P-15328, 0.3 to 0.5 mil.
Two coats of primer, TT-P-645.

8.3.3 Piping and Conduit Colors and Identification: Colors and identification shall conform to the requirements of Table I at end of this Section. All equipment piping and conduits not covered by the aforementioned table shall be stenciled with names or code letters approved by the Contracting Officer, not less than 1/2 inch high for piping and not less than 2 inches high elsewhere. Arrow-shaped markings shall be painted on the lines to indicate the direction of flow. Two copies of the complete color and stencil codes used shall be provided; they shall be framed under glass and shall be installed where directed by the Contracting Officer.

8.3.4 Surfaces Not Requiring Paint: Zinc-coated ducts under insulation, and zinc-coated and copper pipe under insulation or in concealed spaces will not require painting.

8.4 New Hot Metal Surfaces, Including New Piping Under Insulation, New Piping in Concealed Spaces, and Stacks:

8.4.1 Surfaces Subject to Temperatures of 120 to 400 Degrees Fahrenheit:

Two coats heat resistant enamel, TT-E-496, Type II.

8.4.2 Surfaces Subject to Temperatures Over 400 Degrees Fahrenheit:

Two coats of heat resistant paint, TT-P-28.

8.5 Other Surfaces: Other surfaces for which the type of paint has not been specified hereinbefore shall be painted as specified for surfaces having similar conditions of exposure.

---END---

TABLE I

CLASSIFICATION OF MATERIALS IN PIPING SYSTEMS

Pipe Function	Color	Symbol	Identification
Potable Cold Water	Green	PW	Potable Cold Water
Potable Hot Water	Green	PWH PWH (140°)	Potable Hot Water
Potable Hot Water (Recirculating)	Green	PWHR PWHR (140°)	Potable Hot Water (Rec.)
Treated Water	Green	TW	Treated Water
Service Water	Green	SW	Service Water
Boiler Feedwater	Green	BFW	Boiler Feedwater
Chemical Feed	Yellow	CF	Chemical Feed
Lab Vacuum	None	Vac (Lab)	Lab. Vac.
Dental Vacuum	None	OE	Dental Vac.
Solar Collector Supply	Yellow	SCS	Solar Collector Supply
Solar Collector Return	Yellow	SCR	Solar Collector Return
Recirculating Water Supply	Yellow	RWS	Recirculating Water Supply
Recirculating Water Return	Yellow	RWR	Recirculating Water Return
Clinical Vacuum	None	VAC	CL. Vac.
Anesthesia Gas Evacuation	Blue	GE	Anes. Gas. Vac.
One Hundred Pound Air (or Press. Indicated)	Green	IA	100#IA
Deionized Water	Green	DW	Deion. Water
Medical Air	Orange	MA	Med. Air

Dental Air	Orange	DA	Dental Air
Fire Line	Red	FP	Fire
Fire Sprinkler Line	Red	FP	Fire-Sprinkler
Boiler Blowdown	Yellow	BD	Boiler Blowdown
Continuous Boiler Blowdown	Yellow	CBD	Continuous Boiler Blowdown
Wet Vacuum Cleaning	Yellow	WV	Wet Vac. Clean
Vent Piping	Green	V	Vent
Acid Resistant Waste	Yellow	AW	Acid Resist. Waste
Acid Resistant Vent	Yellow	V	Acid Resist. Vent
Soil or Waste	Green	SS	Waste
Storm Water Drain	Green	SD	Storm
Oxygen	Green	O	Oxygen
Nitrous Oxide	Blue	NO	Nitrous Oxide
Nitrogen	Gray	N	Nitrogen
Heavy Fuel Oil Supply	Yellow	FOS	Heavy Fuel Oil Supply
Heavy Fuel Oil Return	Yellow	FOR	Heavy Fuel Oil Return
Light Fuel Oil Supply	Yellow	LOS	Light Fuel Oil Supply
Light Fuel Oil Return	Yellow	LOR	Light Fuel Oil Return
Liquified Petroleum Gas	Yellow	PG	Gas (LP)
Drain Line	Green	DR	Drain
Chilled Water Supply	Green	CHS CCHS	CH. Water CH. Water (Emergency)

Chilled Water Return	Green	CHR CCHR	CHR. Water CHR. Water (Emergency)
Condenser Water Supply	Green	CWS	Cond. Water
Condenser Water Return	Green	CWR	Cond. Water Ret.
High Pressure Steam 75 lb and above	Yellow	HPS	Steam-H.P.
High Pressure Return	Yellow	HPC	Steam H.P.R.
Medium Pressure Steam 50 lb. to 75 lb.	Yellow	MPS	Steam MP
Medium Pressure Return	Yellow	MPC	Steam MPR
Low Pressure Steam 0 lb. to 50 lb.	Yellow	LPS	Steam L.P.
Low Pressure Return	Yellow	LPC	Steam L.P.R.
Pumped Condensate	Yellow	PR	Condensate Pumped
Hot Water Heating Supply	Yellow	HWS	H.W. Heat
Hot Water Heating Return	Yellow	HWR	H.W.R. Heat
Refrigerant Liquid	Green	RL	Ref.-Liquid
Refrigerant Suction	Green	RS	Ref.-Suction

SECTION 09952. WALL COVERING

1. APPLICABLE PUBLICATIONS: The following publications of the issues listed below, but referred to thereafter by basic designation only, form a part of this specification to the extent indicated by the references thereto:

1.1 Federal Specifications:

L-P-1040 & Am 1	Plastic Sheets and Strips (Polyvinyl Fluoride).
CCC-W-408A & Am 1	Wall Covering, Vinyl-coated.

1.2 American Society for Testing and Materials (ASTM) Publications:

E84-77	Surface Burning Characteristics of Building Materials.

2. QUALITY CONTROL: Approvals, except those required for field installation, field application and field tests, shall be obtained before delivery of materials to the project site.

3. SUBMITTALS:

3.1 Tests and Certificates: The testing requirements for materials incorporated in referenced documents will be waived provided the Contractor submits certificates from the manufacturer stating that materials furnished for this project conform to all requirements of this specification and the referenced documents. Copies of the test reports need not be submitted except as specifically requested by the Contracting Officer.

3.1.1 Sample Certificate: The certificate shall not contain statements that could be interpreted to imply that the product does not meet all requirements specified, such as "as good as"; "achieve the same end use and results as materials formulated in accordance with the referenced specification"; "equal or exceed the service and performance of the specified material". The certificate should simply state that the product conforms to all requirements specified.

SAMPLE CERTIFICATE

The manufacturer hereby certifies that all following products being furnished for this project conform to all requirements of the project specifications and the respective reference specifications:

MANUFACTURER AND PRODUCT	REFERENCE SPECIFICATION
John Doe Company Wall Covering	CCC-W-408 & Am 1

SIGNATURE AND TITLE

3.2 Manufacturer's Literature: Manufacturer's literature describing preparation of wall surfaces and application of adhesives, primers or sealers, and application of each type wall covering and giving instructions for cleaning and maintenance shall be submitted and approved prior to installation.

3.3 Samples: The following samples shall be submitted and approved prior to delivery of materials to the site:

(a) Wall Covering: Two samples, minimum 5-inches by 7-inches, of each type and color. Submit 60 days prior to delivery of materials.

(b) Adhesive: One pint of each type.

3.4 Extra Stock: One linear foot of full width of each type and color of wall covering for each 100 linear feet installed shall be submitted to the Contracting Officer.

4. DELIVERY, HANDLING, AND STORAGE: Precautions shall be taken to prevent damage to materials during delivery, handling, and storage. Materials (i.e.) primers, sealers, and adhesives shall be received only in manufacturer's original containers, with seals and labels intact. Store all materials flat in a clean dry area with a sustained temperature above 50 degrees F. and normal humidity. Do not store materials in an upright position.

5. COLORS AND PATTERNS: Colors and patterns, including custom colorways, shall be as indicated. All wall fabric shall be provided to match samples on display at the office of the Contracting Officer.

6. MATERIALS:

6.1 Vinyl Coated Wall Covering: All vinyl coated wall covering shall contain a germicidal additive which eliminates staphyloccus aureus within 24 hours of contact. Vinyl coated wall covering, indicated as "VF-1" and "VF-4" shall conform to CCC-W-408, Type II, except:

(a) Total Weight: Finished total weight (ounces per lineal yard) shall be 20.0, minimum.

(b) Coating Weight: Coating weight (ounces/square yard) shall be 10.8, minimum.

(c) Fabric Type: Fabric shall be polyester/cotton osnaberg.

(d) Breaking Strength: Breaking strength (pounds, minimum) shall be 80 for warp and 75 for filling.

(e) Tear Strength: Tear strength (scale readings, minimum) shall be 30 for warp and 30 for filling.

(f) Fire Hazard Rating: ASTM E84. Vinyl coated wall covering shall be listed by the Underwriters' Laboratories, Inc. attesting to these requirements:

(1) Flame Spread: 15

(2) Fuel Contributed: 5

(3) Smoke Developed: 10

(g) Fabric Width: 27 inches wide.

6.2 Suede Wall Covering: Indicated as "VF-2". Wall covering shall conform to CCC-W-408, Type II, except:

(a) Total Weight: Finished total weight (ounces per lineal yard) shall be 32.0 minimum.

(b) Coating Weight: Coating weight (ounces per lineal yard) shall be 25.0 minimum.

(c) Fabric Type: Mildew treated cotton.

(d) Backing Fabric Weight: Backing fabric weight (ounces per lineal yard) shall be 6.5 minimum.

(e) Fire Hazard Rating: ASTM E84. Suede wall covering shall be listed by the Underwriters' Laboratories, Inc. attesting to these requirements:

(1) Flame Spread: 20.

(2) Fuel Contributed: 10.

(3) Smoke Developed: 35.

6.3 Photomural: Photomural is indicated as "VF-3". Photomural shall have a flame spread rating of not more than 10, a smoke developed factor of not more than 0 and fuel contributed factor of not more than 5 when tested in accordance with ASTM E84. Photomural shall be a latex-impregnated (strippable) paper with a maximum mil thickness of .010 inch. Finish shall be a modified acrylic top-coat (scrubbable).

6.4 Wall Fabric: Indicated as "VF-5". Wall fabric shall have flame spread rating of not more than 15, a fuel contributed factor of not more than 15, and a smoke developed factor of not more than 0. Material shall be preshrunk, mothproof, and sound absorbent. Wall fabric shall have a paper back with a 100% wool face.

6.5 PVF Coated Wall Fabric: Indicated as "VF-6". Over wearing surface, a top coating of clear colorless polyvinyl fluoride (PVF) film, 0.0005 inch thick, meeting requirements of Federal Specification L-P-1040, Type 1, Grade B, Class 2, shall be applied. PVF coated wall fabric shall conform to CCC-W-408, Type II, except:

(a) Total Weight: Finished total weight (ounces per lineal yard) shall be 28.0, minimum.

(b) Vinyl Weight and PVF: Vinyl weight and PVF weight (ounces per square yard) shall be 14.6, minimum.

(c) Fabric Weight: Fabric weight (ounces per square yard) shall be 4.1, minimum.

(d) Fabric Type: Osnaburg.

(e) Total Average Thickness: .032 inch.

(f) Tensile Breaking Strength: Breaking strength (pounds, minimum) shall be 78 for warp and 75 for filling.

(g) Tear Strength: Tear strength (scale readings, average) shall be 43 for warp and 55 for filling.

(h) Fire Hazard Rating: ASTM E84. Vinyl coated wall covering shall be listed by the Underwriters' Laboratories, Inc. attesting to these requirements:

(1) Flame Spread: 15

(2) Fuel Contributed: 5

(3) Smoke Developed: 10

6.6 Primers, Sealers, and Adhesives: Primers, sealers, and adhesives shall be mildew resisting, and non-staining to the wearing surface and shall conform to requirements of the wall covering manufacturer; adhesives shall be supplied by the manufacturer of the wall covering and shall conform to all fire code requirements.

7. INSTALLATION: Areas to receive wall covering shall have a constant temperature of at least 55 degrees F. for 3 days before, during and after installation.

7.1 Preparation of Wall Surfaces: Remove from substrate any dirt and grease and any crayon, ink or similar markings to prevent color staining or bleeding through the wall covering. Fill all cracks, crevices, and holes with spackling compound. Sand all rough spots smooth. All surfaces to receive wall covering shall be thoroughly dry. The Contractor shall test moisture content of plaster with an electric moisture meter and reading shall not be more than 5 percent. Surface of wall shall be primed or sealed as required by manufacturer's instructions in order to permit ultimate removal of wall covering without damaging the wall surface.

7.2 Adhesive and Wall Covering: Apply adhesive and wall covering in strict accordance with each manufacturer's printed instructions.

7.3 Covering: Covering shall be applied without horizontal joints, except where otherwise indicated. Internal and external angles shall be continuous. Vertical joints shall be lapped and double-cut or factory-trimmed and butted. Edges shall extend not less than 1/2 inch behind applied base and trim. All seams and corners shall be securely pasted so that no moisture or water vapor can get behind the wall covering. Wall covering shall be extended behind edges of switch plates and other surface-mounted equipment. Wall covering shall be hung in a manner that will assure uniformity of color and matching of patterns at seams.

7.4 Finished Surfaces: Finished surfaces shall be free from air pockets, wrinkles, open joints, tears or other defects. Excessive adhesive shall be removed.

7.5 Paste: All excess paste shall be removed and wall covering shall be left clean and free of dirt or soiling after completion of work.

---END---

SECTION 10101. CHALKBOARDS

1. APPLICABLE PUBLICATIONS: The following publications of the issues listed below, but referred to thereafter by basic designation only, form a part of this specification to the extent indicated by the references thereto.

1.1 Federal Specifications:

QQ-A-200/9C & Am 1	Aluminum Alloy Bar, Rod, Shapes, Tube, and Wire, Extruded 6063.

1.2 Porcelain Enamel Institute, Inc. (PCI):

S100	Architectural Porcelain Enamel on Steel.

1.3 National Association of Architectural Metal Manufacturer's (NAAMM):

Metal Finishes Manual (Finish Designation), August 1969.

2. QUALITY CONTROL: Approvals, except those required for field installation, field application and field tests, shall be obtained before delivery of materials to the project site.

3. SUBMITTALS:

3.1 Tests and Certificates: The testing requirements for materials incorporated in referenced documents will be waived provided the Contractor submits certificates from the manufacturer stating that materials furnished for this project conform to all requirements of this specification and the referenced documents. Copies of the test reports need not be submitted except as specifically requested by the Contracting Officer.

3.1.1 Sample Certificate: The certificate shall not contain statements that could be interpreted to imply that the product does not meet all requirements specified, such as "as good as"; "achieve the same end use and results as materials formulated in accordance with the referenced specification"; "equal or exceed the service and performance of the specified material". The certificate should simply state that the product conforms to all requirements specified.

SAMPLE CERTIFICATE

The manufacturer hereby certifies that all following products being furnished for this project conform to all requirements of the project specifications and the respective reference specifications:

MANUFACTURER AND PRODUCT	REFERENCE SPECIFICATION
John Doe Company Aluminum Trim	QQ-A-200/9C & Am 1

10101

SIGNATURE AND TITLE

3.2 Shop Drawings: Shop drawings shall be submitted and approved before delivery of materials to the site. Shop drawings shall show types, sizes, installation, and anchoring details.

3.3 Samples: The following samples of materials in each color shall be submitted for approval before the work is started.

(1) Chalkboard: One unit 12 inches by 12 inches.

(2) Liquid Writing Board: One unit 12 inches by 12 inches, showing joint.

(3) Trim: Two units 12 inches long.

(4) Markers: One of each color.

(5) Chalk Trough: Two units 12 inches long.

(6) Grounds: Two of each type.

(7) Clips: Two of each type.

3.4 Manufacturer's Installation Procedures: Manufacturer's currently recommended installation procedures shall be submitted and approved. Installation procedures shall accompany shop drawings.

4. DELIVERY, STORAGE, AND PROTECTION: Materials shall be delivered to the site in the original sealed containers or packages and shall bear the manufacturer's name and brand designation. Materials shall be stored and handled in a manner to protect them from damage during the entire construction period.

5. MATERIALS:

5.1 Chalkboards: Chalkboards shall be complete with metal frames or trim, chalk trough, grounds and clips. No joints allowed for chalkboard face sheet, core material, and panel backing.

5.1.1 Face Sheet: Face sheet shall be minimum 24 gage stretcher leveled steel sheets with vitreous porcelain enamel writing surface conforming to PCI S100. Color of face sheet shall be as indicated.

5.1.2 Core Material: Core material shall be 3/8 inch thick particle board.

5.1.3 Panel Backing: Panel backing shall be .015 inch thick aluminum sheet.

5.1.4 Laminations: Laminations shall be hot-type neoprene contact adhesive applied to both surfaces automatically. Each substrate shall have a minimum of 80 percent covering with 1.5 to 2.0 dry mils of adhesive. Panel components shall have uniform pressure applied mechanically over entire area. Laminations shall be made by face sheet manufacturer.

5.2 Liquid Writing Board: Liquid writing board shall be complete with metal frames, or trim, grounds and clips. Joints shall be machine matched, splined, butt joint type with face sheet overlapping adjacent core material 1/8 inch. Sequence match face sheets. Color of liquid writing board shall be as indicated.

5.2.1 Face Sheet: All panels shall be semi-gloss, graphically textured porcelain enamel, conforming to PCI S100, applied at high temperature to 24 gauge stretcher-leveled aluminized steel sheets. Porcelain surface shall be made from lead-bearing, low-fusion type frits and must be compatible with dry removal markers to provide maximum marker life, minimum erasing effort, and dry removal of mark. Surfaces limited to markers requiring wet mark removal will not be acceptable. Manufacturer will be required to furnish a life-of-the-building guarantee on the writing surface under normal classroom condition usage.

5.2.2 Core Material: Core material shall be 3/8 inch thick particle board routed to receive spline.

5.2.3 Panel Backing: Panel backing shall be .015 inch aluminum sheet.

5.2.4 Splines: Aluminized steel, 18 gage.

5.2.5 Laminations: Laminations shall be hot-type neoprene contact adhesive. Each substrate shall have a minimum of 80 percent coverage with 1.5 to 2.0 dry mils of adhesive. Lamination shall be made by face sheet manufacturer.

5.2.6 Markers: Provide one gross felt-tipped type markers in four assorted colors, packed one dozen to a box. Markers shall have the capability of dry removal from writing surface with ordinary felt erasers. Markers requiring water, special solvents, or treated erasers will not be acceptable. Markers shall be certified as nontoxic.

5.3 Frames or Trim: Frames or trim shall be fabricated from extruded aluminum, 6063-T5 alloy conforming to Federal Specification QQ-A-200/9. Units shall be 0.062 inches thick, except where otherwise specified and shall be of the snap-on-type. Frames or trim shall be approximately 1-3/4 inches wide with square edges.

5.3.1 Chalk Trough: Chalk trough shall be a minimum of 0.093 inches thick, snap-on type, shall project approximately 2-3/4 inches, extending entire length of chalkboard unless otherwise indicated, grooved, and with end closures or caps.

5.3.2 Finish: All exposed aluminum surfaces, frames or trim, shall have a AA-M10-C22-A42 color anodized finish in accordance with the requirements of NAAMM's "Metal Finishes Manual". Finish color shall be black. Finish shall match in appearance or fall within the two extremes of color range of the approved samples.

5.4 Grounds: Grounds shall be 16 gage galvanized steel and shall be fastened to walls with screws, rawl plugs, nails, expansion or toggle bolts, or other approved fastenings spaced a maximum of 12 inches on centers. Where grounds are attached to metal stud partitions, wood or metal reinforcing shall be provided in metal stud space. Verify placement of reinforcing.

5.5 Clips: Clips shall be galvanized steel. Clips for frames or trim and chalk trough shall receive snap-on trim and lap edges of chalkboard not less than 1/4 inch. Place clips adjacent to joints and to corners at horizontal and vertical sections and at intermediate points spaced at 16 inches on center maximum. Secure clips to grounds with screws.

6. INSTALLATION: Install all materials in accordance with approved shop drawings and manufacturer's directions.

---END---

SECTION 10162. METAL TOILET PARTITIONS

1. APPLICABLE PUBLICATIONS: The following publications of the issues listed below, but referred to thereafter by basic designation only, form a part of this specification to the extent indicated by the references thereto:

1.1 Federal Specifications:

RR-P-1352A & Int Amd 1	Partitions, Toilet, Complete.

2. QUALITY CONTROL: Approvals, except those required for field installation, field applications and field tests, shall be obtained before delivery of materials to the project site.

3. SUBMITTALS:

3.1 Tests and Certificates: The testing requirements for materials incorporated in referenced documents will be waived provided the Contractor submits certificates from the manufacturer stating that materials furnished for this project conform to all requirements of this specification and the referenced documents. Material certificates shall be submitted to and approved by the Contracting Officer. Copies of the test reports need not be submitted except as specifically requested by the Contracting Officer.

3.1.1 Sample Certificate: The certificate shall not contain statements that could be interpreted to imply that the product does not meet all requirements specified, such as "as good as"; "achieve the same end use and results as materials formulated in accordance with the referenced specification"; "equal or exceed the service and performance of the specified material". The certificate should simply state that the product conforms to all requirements specified.

SAMPLE CERTIFICATE

The manufacturer hereby certifies that the following products being furnished for this project conform to all requirements of the project specifications and the respective reference specifications:

MANUFACTURER AND PRODUCT	REFERENCE SPECIFICATION
John Doe Company	
Toilet Partitions, Type OB	RR-P-1352, Type I, Style C.
Urinal Screens, Type FS	RR-P-1352, Type III, Style A.

SIGNATURE AND TITLE

3.2 Catalog Data: Complete descriptive literature for each type of partition shall be submitted to and approved by the Contracting Officer. Data which describe more than one type, size, model, or item shall be clearly marked to indicate which type, size, model, or item the Contractor intends to provide. Data shall be sufficient to show conformance to specified requirements.

3.3 Shop Drawings: Complete shop drawings for all partitions shall be submitted to and approved by the Contracting Officer. Show layout, details, materials, dimensions, finishes, and all information necessary for fabrication and installation.

3.4 Colors: One sample of each color of partition for verification that products match the colors indicated shall be submitted to and approved by the Contracting Officer. Where colors are not indicated, submit not less than 8 different samples of manufacturer's standard colors for selection by the Contracting Officer.

4. DELIVERY AND STORAGE: Deliver materials in manufacturer's original, unopened containers or packaging with labels intact and legible. Deliver, store, and handle materials so as to prevent damage. Defective materials and damaged materials shall be replaced by the Contractor at no additional cost to the Government.

5. GENERAL REQUIREMENTS: Toilet partitions shall be provided complete with all fastenings, fittings, hardware, and accessories necessary for a complete and finished installation. Toilet paper holders are specified in section "Metal Toilet and Bath Accessories".

6. MATERIALS: Toilet partitions shall conform to RR-P-1352, except as otherwise specified herein.

6.1 Water Closet Enclosures: Type I, Style B, ceiling hung. Each water closet enclosure shall be provided with a door. Sizes shall be as specified in RR-P-1352, except as indicated otherwise. Provide compartments for the handicapped where indicated. Reinforce enclosures for grab bars.

6.2 Room Entrance Screen: Type II, Style B, ceiling hung. Sizes shall be as indicated.

6.3 Urinal Screen: Type III, Style D, wall hung. Urinal screens shall be 24 inches wide.

6.4 Finish: Partitions shall have Finish 2, porcelain enamel. Finish colors shall be as indicated or, if not indicated, as selected by the Contracting Officer from the manufacturer's standard color charts in one or two colors.

6.5 Hardware: Stainless steel or chromium-plated brass. Do not use zinc alloy.

7. INSTALLATION: The work shall be secured to contiguous construction in a rigid and substantial manner, straight and plumb, with uniform clearance of 1/2 inch between pilasters and panels, 1 inch between pilasters and walls, and panels and walls, and no more than 3 /16 inch between pilasters and doors. Evidence of drilling floors and walls shall be concealed in the finished work. Hardware shall be adjusted for proper operation, and hinges shall be set to hold the doors ajar about 30 degrees when unlatched. After installation, all exposed surfaces shall be thoroughly cleaned, and all damaged work shall be restored to its original condition, or replaced with new work. The exposed heads of unfinished steel bolts and screws shall be neatly painted to match the color of adjoining partition surfaces.

---END---

SECTION 10202. EXTERIOR WALL LOUVERS

1. APPLICABLE PUBLICATIONS: The following publications of the issues listed below, but referred to thereafter by basic designation only, form a part of this specification to the extent indicated by the references thereto:

1.1 Federal Specifications:

QQ-A-200/9C & Am 1	Aluminum Alloy Bar, Rod, Shapes, Tube, and Wire, Extruded, 6063.
RR-W-365 & Am 2	Wire Fabric (Insect Screening).

1.2 American Society for Testing and Materials (ASTM):

B209-77	Aluminum-Alloy Sheet and Plate.

1.3 National Association of Architectural Metal Manufacturer's (NAAMM):

Metal Finishes Manual (Finish Designation), August 1969.

2. QUALITY CONTROL: Approvals, except those required for field installation, field application and field tests, shall be obtained before delivery of materials to the project site.

3. SUBMITTALS:

3.1 Tests and Certificates: The testing requirements for materials incorporated in referenced documents will be waived provided the Contractor submits certificates from the manufacturer stating that materials furnished for this project conform to all requirements of this specification and the referenced documents. Material certificates shall be submitted to and approved by the Contracting Officer. Copies of the test reports need not be submitted except as specifically requested by the Contracting Officer.

3.1.1 Sample Certificate: The certificate shall not contain statements that could be interpreted to imply that the product does not meet all requirements specified, such as "as good as"; "achieve the same end use and results as materials formulated in accordance with the referenced specification"; "equal or exceed the service and performance of the specified material". The certificate should simply state that the product conforms to all requirements specified.

SAMPLE CERTIFICATE

The manufacturer hereby certifies that all following products being furnished for this project conform to all requirements of the project specifications and the respective reference specifications:

MANUFACTURER AND PRODUCT	REFERENCE SPECIFICATION
John Doe Company Aluminum	QQ-A-200/9

SIGNATURE AND TITLE

3.2 Shop Drawings: Shop drawings shall be submitted to and approved by the Contracting Officer before delivery of materials to the site. Shop drawings shall show types, sizes, profiles, locations, thicknesses, construction, methods of assembly, anchoring details, and other construction details.

3.3 Samples: The following samples of materials shall be submitted to and approved by the Contracting Officer before work is started.

(1) One 6-inch by 6-inch louver blade.

(2) One full size sample of blade clip.

(3) One 6-inch by 6-inch head and sill member.

(4) One 6-inch by 6-inch sill flashing.

(5) One 6-inch by 6-inch sample of each type of screen fabric.

(6) One 6-inch long sample of each type of screen frame.

(7) One 6-inch long vertical support.

(8) Two 6-inch long samples of extrusions and sheet aluminum with specified finish.

3.4 Manufacturer's Installation Procedures: Manufacturer's currently recommended installation procedures shall be submitted to and approved by the Contracting Officer. Installation procedures shall be submitted with shop drawings.

4. DELIVERY, STORAGE AND PROTECTION: Materials shall be adequately packaged and protected during shipment and shall be inspected for damage, dampness and wet-storage stains upon delivery to the job site. Damaged or permanently stained materials that cannot be restored to like-new condition shall be removed from the site and shall be replaced at no additional cost to the Government. Louvers and screens shall be carefully handled to avoid damage. Crated materials shall not be uncrated until ready for use. Materials shall be stored in dry weather-tight ventilated areas until immediately before installation.

5. MATERIALS:

5.1 Louvers: Louvers shall be field assembled units, 6-inches and 4-inches deep, continuous type, with snap-in type stormproof blades.

5.1.1 Blades: Extruded 6063 aluminum alloy conforming to QQ-A-200/9, .081 inches thick.

5.1.2 Blade Clip: Extruded 6063 aluminum alloy conforming to QQ-A-200/9, .125 inches thick.

5.1.3 Head and Sill Members: Extruded 6063 aluminum alloy conforming to QQ-A-200/9, .100 inches thick.

5.1.4 Vertical Supports: Aluminum 6063 alloy rolled angle shapes. Supports shall be designed to carry a 45 pound per square foot wind load for height of opening. Provide clips and support fasteners.

5.1.5 Sill Flashing: ASTM B209, sheet aluminum .064 inches thick.

5.1.6 Fasteners: Type 305 or 410 stainless steel with finish and color to match louver.

5.1.7 Lapstrips: Aluminum 6063 alloy, manufacturer's standard at louver blade joints.

5.2 Screens:

5.2.1 Insect Screen Fabric: Federal Specification RR-W-365, Type VII, 18 x 14 mesh.

5.2.2 Bird Screen Fabric: Aluminum, 1/2 inch mesh, 16 gage.

5.2.3 Screen Frames: Extruded 6063 aluminum shapes of size recommended by louver manufacturer.

5.3 Sealant: See section entitled "Calking".

6. FINISH: Exposed aluminum surfaces, including vertical supports shall have a AA-M10-C22-A42 color anodized finish in accordance with the requirements of NAAMM's "Metal Finishes Manual". Finish color shall be black. Finish shall match in appearance or fall within the two extremes of color range of the approved samples. All screen fabric shall be finished in a color to match louvers.

7. FABRICATION:

7.1 Louvers: Fabricate 6-inch louvers to provide a minimum free area opening percentage of 45 and fabricate 4-inch louvers to provide a minimum of free area opening of 38.

7.2 Screens: Fabricate screen frames to provide a completely removable unit.

8. INSTALLATION: Manufacturer or one of their approved qualified erectors shall install louvers and screens. Louvers and screens shall be installed in accordance with approved shop drawings and manufacturer's directions. Anchor blade clips to vertical supports. Install blades on blade clips, including lapstrips at junction of blade ends and sill flashing as indicated. Install removable screens as indicated. After installation, all exposed surfaces shall be thoroughly cleaned, and all damaged work shall be restored to its original condition, or replaced with new work at no expense to the Government.

---END---

SECTION 10203. METAL DOOR LOUVERS

1. APPLICABLE PUBLICATIONS: The following publications of the issues listed below, but referred to elsewhere by basic designation only, form a part of this specification to the extent indicated by the references thereto:

1.1 Federal Specifications:

QQ-S-775E Steel Sheets, Carbon, Zinc-coated.

2. QUALITY CONTROL: Approvals, except those required for field installation, field application and field tests, shall be obtained before delivery of materials to the project site.

2.1 Selection of Colors: Colors of paint finish shall closely approximate colors indicated. Where color is not indicated the Contractor shall submit the manufacturer's standard colors to the Contracting Officer for selection.

3. SUBMITTALS:

3.1 Tests and Certificates: The testing requirements for materials incorporated in referenced documents will be waived provided the Contractor submits certificates from the manufacturer stating that materials furnished for this project conform to all requirements of this specification and the referenced documents. Copies of the test reports need not be submitted except as specifically requested by the Contracting Officer.

3.1.1 Sample Certificate: The certificate shall not contain statements that could be interpreted to imply that the product does not meet all requirements specified, such as "as good as"; "achieve the same end use and results as materials formulated in accordance with the referenced specification"; "equal or exceed the service and performance of the specified material". The certificate should simply state that the product conforms to all requirements specified.

SAMPLE CERTIFICATE

The manufacturer hereby certifies that all following products being furnished for this project conform to all requirements of the project specifications and the respective reference specifications:

MANUFACTURER AND PRODUCT	REFERENCE SPECIFICATION
John Doe Company Galvanized Steel	QQ-S-775

SIGNATURE AND TITLE

3.2 Shop Drawings: Shop drawings and manufacturer's literature showing all information necessary for fabrication and erection of louvers shall be submitted for approval. Drawings shall indicate materials, sizes, thicknesses, fastenings, and profiles. Materials shall not be delivered to job site until shop drawings and manufacturer's literature have been approved.

4. GENERAL REQUIREMENTS: The work includes metal louvers in wood doors. Louvers in metal doors are specified in section entitled "Hollow Metal Doors and Frames". Exterior wall louvers are specified in section entitled "Exterior Wall Louvers".

5. METAL LOUVERS FOR WOOD DOORS: Louvers shall be of the inverted "Y" or inverted "V" sightproof type and shall transmit a minimum of 35 percent free air. Louvers shall be of the sizes indicated. Louvers for oak veneer doors and plastic laminate doors shall be of the framed type for use with wood and plastic laminate wood covered moldings. Moldings are specified in section entitled "Wood Doors". Contractor has the option of providing either extruded aluminum or formed metal louvers; however, only one type of louver shall be supplied.

5.1 Extruded Aluminum: Blades and frame shall be fabricated of 6063-T5 aluminum alloy with a wall thickness of not less than 0.050 inch thick. All screw fasteners shall be of stainless steel. Aluminum surfaces shall be provided with a baked-on enamel finish.

5.2 Formed Metal: Blades and frame shall be fabricated of 20 U. S. gage steel sheet conforming to QQ-S-775, Class d or sheet aluminum not less than 0.040 inch thick. Screws and fasteners shall be of metal compatible with louver material. Steel surfaces shall be provided with a baked-on primer coat and a baked-on coat of synthetic enamel. Aluminum surfaces shall be provided with a baked-on enamel finish.

6. INSTALLATION: Installation shall be in accordance with the manufacturer's published instructions except as indicated otherwise. All exposed screw heads shall be of the countersunk type.

---END---

SECTION 10250. FIREFIGHTING DEVICES

1. APPLICABLE PUBLICATIONS: The following publications of the issues listed below, but referred to thereafter by basic designation only, form a part of this specification to the extent indicated by the references thereto:

1.1 Federal Specification (Fed. Spec.):

DD-G-1403B & Am 1	Glass, Plate (Float), Sheet, Figured, and Spandrel (Heat Strengthened and Tempered).

2. QUALITY CONTROL:

2.1 General: Approval, except those required for field installations, field applications and field tests, shall be obtained before custom fabrication is started and before delivery of material or equipment to the project site.

3. SUBMITTALS:

3.1 Shop drawings for all devices shall be approved and submitted to the Contracting Officer for submission to the LANTDIV Fire Protection Engineer, for final approval before work is started. Drawings shall show types, sizes, locations, metal gages, hardware provisions, installation details, and other details of construction.

3.2 Manufacturer's Installation Procedures: Manufacturer's currently recommended installation procedures for devices shall be approved and submitted, in triplicate, to the Contracting Officer for submission to the LANTDIV Fire Protection Engineer, for final approval. Installation procedures shall accompany the shop drawings.

3.3 Certificates of Conformance or Compliance: Before delivery of firefighting devices, certificates attesting that firefighting devices meet the requirements specified shall be approved and submitted to the Contracting Officer for submission to the LANTDIV Fire Protection Engineer, for final approval.

4. DELIVERY AND STORAGE: Devices shall be delivered to the job site wrapped in a protective covering, with the brands and names clearly marked thereon. Devices shall be stored in dry locations with adequate ventilation, free from dust, or water and in such a manner to permit easy access for inspection and handling. Devices shall be handled carefully to prevent damage to the faces, edges, and ends. Damaged items that cannot be restored to like-new condition shall be replaced at no additional cost to the Government.

5. FIRE EXTINGUISHER CABINETS:

5.1 Body shall be cold-rolled, annealed, stretcher-leveled, bonderized steel not less than 20 gauge one-piece full-welded with square corners, or

seamless front full-welded to back and at corners. Welds shall be continuous in full depth and width, dressed smooth and flush on exposed interior and exterior surfaces. Sides shall be blanked or countersunk for hardware. Type shall be semi-recessed.

5.2 Door shall be hollow construction sheet steel not less than 20 gauge. Rails and stiles shall be of one-piece rolled section mitered and welded at corners, with attached glass retainers on inside, or of two-piece construction pressed from single sheets. Duo-panel glass in door shall conform to specification DD-G-1403, Kind FT, Condition A, Type I, Class 1. Cabinets shall have hinges and catch. Hinges shall be cabinet manufacturer's standard as to material, type and finish, permitting door to open 180 degrees. Catch shall be lever handle type, brass or bronze, bright chrome finish over nickel.

5.3 The cabinet interior shall have white enamel finish; the cabinet exterior shall be primed. The door glass panel shall include the words "FIRE EXTINGUISHER" in 1-1/2" red letters.

5.4 Cabinet size shall be as follows:

Designation	Width	Height	Depth
FEC and FEC1	16"	31"	8"

---END---

SECTION 10261. CORNER GUARDS AND BUMPER GUARDS

1. APPLICABLE PUBLICATIONS: The following publications of the issues listed below, but referred to thereafter by basic designation only, form a part of this specification to the extent indicated by the references thereto:

1.1 Federal Specifications:

QQ-A-200/9C & Am1	Aluminum Alloy Bar, Rod, Shapes, Tube, and Wire, Extruded 6063 Alloy.

1.2 American Society for Testing and Materials (ASTM):

D256-73	Impact Resistance of Plastics and Electrical Insulating Material.
D635-76	Rate of Burning and/or Extent and Time of Burning of Self-Supporting Plastics in a Horizontal Position.
E84-77	Surface Burning Characteristics of Building Materials.

2. QUALITY CONTROL: Approvals, except those required for field installation, field application and field tests, shall be obtained before delivery of materials to the project site.

3. SUBMITTALS:

3.1 Tests and Certificates: The testing requirements for materials incorporated in referenced documents will be waived provided the Contractor submits certificates from the manufacturer stating that materials furnished for this project conform to all requirements of this specification and the referenced documents. Copies of the test reports need not be submitted except as specifically requested by the Contracting Officer.

3.1.1 Sample Certificate: The certificate shall not contain statements that could be interpreted to imply that the product does not meet all requirements specified, such as "as good as"; "achieve the same end use and results as materials formulated in accordance with the referenced specification"; "equal or exceed the service and performance of the specified material". The certificate should simply state that the product conforms to all requirements specified.

SAMPLE CERTIFICATE

The manufacturer hereby certifies that all following products being furnished for this project conform to all requirements of the project specifications and the respective reference specifications:

MANUFACTURER AND PRODUCT	REFERENCE SPECIFICATION
John Doe Company Vinyl Acrylic Alloy	ASTM E84

3.2 Shop Drawings: Shop drawings shall be submitted and approved before delivery of materials to the site. Shop drawings shall show types, sizes, locations, metal gages, hardware provisions, installation details, anchoring details, and other construction details.

3.3 Samples: The following samples of materials in each color shall be submitted for approval before the work is started.

(1) Corner Guards: One 12-inch assembly of each type.

(2) Bumper Guards: One 12-inch assembly of each type.

(3) Anchors: Two of each type.

(4) Mounting Hardware: One assembly of each type.

3.4 Manufacturer's Installation Procedures: Manufacturer's currently recommended installation procedures shall be submitted and approved. Installation procedures shall accompany shop drawings.

4. DELIVERY, STORAGE, AND PROTECTION: Materials shall be delivered to the site in the original sealed containers or packages and shall bear the manufacturer's name and brand designation. Where materials are covered by a referenced specification, the containers or packages shall bear the specification number and type as applicable. Materials shall be stored and handled in a manner to protect them from damage during the entire construction period.

5. COLORS: Colors of corner guards and bumper guards shall match samples in display at the office of the Contracting Officer.

6. MATERIALS:

6.1 Vinyl: Vinyl acrylic alloy having a minimum impact resistance of 350 foot pounds psi when tested in accordance with ASTM D256, and shall have a Class 1 Rating when tested in accordance with ASTM E84. A brocidal agent shall be incorporated in the resin and shall be effective against gram-negative and gram-positive organisms.

6.2 Closure Caps: High-impact nylon, standard of manufacturer. Color shall match vinyl.

6.3 Bumper Cushion: Type recommended by vinyl manufacturer.

6.4 Back-Up Sheet: Material same as specified under paragraph entitled "Vinyl".

6.5 Bumper Cushion: Vinyl of type recommended by vinyl manufacturer.

6.6 Mounting Bracket: Material same as specified under paragraph entitled "Vinyl".

6.7 Aluminum: Extruded from 6063-T5 aluminum alloy conforming to QQ-A-200/9.

6.8 Fasteners: Type as indicated or as recommended and provided by vinyl manufacturer.

6.9 End Caps: High impact material as recommended by vinyl manufacturer.

6.10 Wood Handrail (BG-1): As specified in other sections.

7. FABRICATION:

7.1 Corner Guard Assemblies (CG-1 and CG-2): Vinyl corner guard assemblies shall conform to profiles, sizes and shapes indicated. Vinyl surfaces shall have a matte finish pebblette grain surface with color integral throughout the depth of the material. Corner guards shall be fabricated from vinyl having a nominal wall thickness of .110 inches. Back up sheet for CG-2 shall be fabricated from vinyl having a nominal wall thickness of .078 inches. Continuous extruded aluminum retainers shall be .063 inches thick with fasteners for mounting approximately 18 inches on center. Provide closure caps to close off top and bottom where required.

7.2 Bumper Guard Assemblies:

7.2.1 Bumper Guard Assembly (BG-2): Vinyl bumper guard assembly (BG-2) shall conform to profiles, sizes and shapes indicated. Vinyl surfaces shall have a matte finish pebblette grain surface with color integral throughout the depth of the material. Bumper guards shall be fabricated from vinyl having a nominal wall thickness of .100 inches. Continuous extruded aluminum retainers shall be .072 inches thick with fasteners for mounting approximately 16 inches on center, and with bumper cushions at all fastener locations. Provide end caps at all terminations and concealed splice plates at all joints.

7.2.2 Bumper Guard Assembly (BG-3): Bumper guard assembly (BG-3) shall conform to profiles, sizes and shapes indicated. Vinyl surfaces shall have a matte finish pebblette grain surface with color integral throughout the depth of the material. Bumper guard shall be fabricated from vinyl having a nominal wall thickness of .078 inches. Continuous extruded aluminum retainers shall be .081 inches thick and shall be permanently affixed to wall through mounting brackets. Mounting brackets shall be fabricated from .125 inch thick vinyl. Provide each retainer with continuous vinyl cushion. Bumper guard assembly

shall be provided with continuous external and internal corner units, end caps, attachment plates, concealed splice plates at all joints and all required hardware for a complete and approved installation.

8. INSTALLATION: Corner guards and bumper guards shall be installed at locations indicated, in accordance with approved shop drawings and manufacturer's directions.

8.1 Corner Guards: With approved anchorage devices, secure retainers and closure caps to wall on both sides of corner. Install back-up sheet where indicated or required. Guards shall then be hand pressure locked over the retainers, yet shall provide free-floating action to absorb heavy impact without damage to guard, retainer or adjacent wall. Guards shall be straight and true over full height.

8.2 Bumper Guard Assemblies:

8.2.1 Bumper Guard Assembly (BG-2): After painting or wall covering has been completed, securely install retainers with approved fastening devices. Install bumper cushion and bumper guard and lock in place yet provide for free-floating action to absorb heavy impact without damage to guard, retainer or adjacent wall. Bumpers shall be straight and true over full length.

8.2.2 Bumper Guard Assembly (BG-3): After painting or wall covering has been completed, securely install mounting brackets and retainers with approved fastening devices. Unless otherwise indicated or recommended by manufacturer, locate first bracket 2-5/8 inches from each end of each retainer and space remainder of brackets 32 inches on centers. Bumpers shall then be locked over the retainer yet shall provide for shock-absorbing action under impact without damage to bumper, retainer brackets, or adjacent wall. Bumpers shall be straight and true over full length.

---END---

SECTION 10350. FLAGPOLES

1. APPLICABLE PUBLICATIONS: The following publications of the issues listed below, but referred to thereafter by basic designation only, form a part of this specification to the extent indicated by the references thereto:

1.1 Federal Specifications:

QQ-A-200/9C & Am 1	Aluminum Alloy, Bar, Rod, Shapes, Tube and Wire, Extruded 6063.
QQ-S-763D & Int Amd 1 & Notice 1	Steel Bars, Wire, Shapes, and Forgings, Corrosion-resisting.
QQ-S-766C & Am 5	Steel Plates, Sheets, and Strip-corrosion Resisting.
TT-S-001543A	Sealing Compound: Silicone Rubber (For Calking, Sealing, and Glazing in Building and Other Structures).

1.2 American Association of State Highway and Transportation Officials (AASHTO):

M-36	Zinc-coated Corrugated Iron or Steel Culverts and Underdrains.

1.3 National Association of Architectural Metal Manufacturer's (NAAMM):

Metal Finishes Manual (Finish Designation), August 1969.

2. QUALITY CONTROL: Approval, except those required for field installations, field applications, and field tests, shall be obtained before custom fabrication is started and before delivery of material or equipment to the project site.

3. SUBMITTALS:

3.1 Tests and Test Reports: The testing requirements incorporated in referenced documents will be waived provided the manufacturer submits certificates that previously manufactured materials have been tested by recognized laboratories, that such materials meet testing requirements specified and that the tested materials is of the same type quality, manufacture and make as that furnished for this project. Copies of the test reports need not be submitted except as specifically requested by the Contracting Officer.

3.2 Shop Drawings: Shop drawings shall be submitted and approved prior to execution of work. Drawings shall show sizes, locations, metal gages, hardware provisions, installation details, and other details of construction.

3.3 Samples: Submit two samples of specified finish for approval prior to fabricating flagpoles.

3.4 Manufacturer's Installation Procedures: Manufacturer's currently recommended installation procedures for items shall be submitted and approved. Installation procedures shall accompany the shop drawings.

4. DELIVERY AND STORAGE: Exercise care in handling, delivering, and storing flagpoles to prevent damage. Flagpoles shall be packed and prepared for shipment in accordance with manufacturer's recommendations to assure maximum protection during shipment and to avoid bending or twisting of the flagpoles.

5. MATERIALS:

5.1 Aluminum: Federal Specification QQ-A-200/9, alloy 6063, temper T6.

5.2 Stainless Steel: Federal Specification QQ-S-763 and QQ-S-766, Class 304.

5.3 Foundation Tube: AASHTO M-36, 16 gage galvanized corrugated steel tube.

5.4 Sealant: Federal Specification TT-S-001543, Class A, color selected.

5.5 Concrete: Concrete shall be as specified in section entitled: "Cast-In-Place Concrete".

6. FLAGPOLES:

6.1 General: Flagpoles shall be ground set, cone tapered aluminum complete with all fittings. Flagpoles shall be 59 feet exposed height by 65 feet total length, tapered portion 56 feet, straight butt portion 9 feet, outside top diameter 4 inches, and outside butt diameter of 12 inches.

6.2 Construction: Flagpole wall thickness shall be .188 inch for upper 41 feet 2 inches and .250 inch for remainder of flagpole, with uniform conical taper of approximately 1 inch every 7 feet throughout the tapered portion. Pole shall be machine-made of seamless extruded aluminum and not from rolled plate with welded seam. Flagpole shall have a smooth uninterrupted exterior surface without visible joints or offsets. Splicing sleeve shall be factory fitted and match-marked. Sections shall be self-aligning and self-locking requiring no field welding.

6.3 Ball: Ball shall be 12 inches in diameter and constructed of 14 gage aluminum having flush seam, and mounted on 5/8 inch dural rod attached to truck.

6.4 Truck: Truck shall be non-fouling with aluminum body, revolving on aluminum spindle with 2 ball races containing 26, 1/4 inch stainless steel balls. Truck shall have two extra heavy type 4 inch diameter Delrin sheaves rotating on 1/2 inch stainless steel pins.

6.5 Cleats: Cleats shall be two 9 inch cast aluminum cleats, each attached to pole with two 5/16 inch flat head dural machine screws.

6.6 Cleat Covers: Aluminum cleat covers, one per cleat, shall be equipped with separate staple-cleat support post and six-lever padlock. Covers shall attach directly to support post and shall not require additional fasteners into flagpole.

6.7 Halyards: Halyards shall be two 3/8 inch No. 12 nylon braded rope halyards having bronze center, each with two quiet halyard flag clasps for securing to flag.

6.8 Metal Base: Cast or spun aluminum base, of design indicated. Provide recess in top for installation of sealant to flagpole after erection.

6.9 Foundation Tube: Foundation tube shall be of proper length and diameter. Foundation tube shall include welded steel bottom plate, lower welded steel internal centering wedges, top hardwood internal centering wedges, steel lightning ground spike and steel plate support; all steel shall be galvanized. Construct foundations in accordance with manufacturer's recommendations, except where indicated otherwise. Exposed portions of concrete foundations shall have a smooth rubbed finish, with true lines and arrises.

7. FINISHES:

7.1 Exposed Surfaces: Exposed aluminum surfaces shall have a AA-M10-C22-A42 color anodized finish in accordance with the requirements of NAAMM's "Metal Finishes Manual". Finish color shall be dark bronze. Finish shall match in appearance or fall within the two extremes of color range of the approved sample.

7.2 Unexposed Surfaces: Unexposed surfaces of flagpoles below grade, both inside and outside, shall be painted with manufacturer's standard black asphaltum paint prior to shipment. Do not paint exposed aluminum surfaces.

8. INSTALLATION: Install flagpoles in concrete foundations as indicated and in accordance with approved shop drawings and manufacturer's recommendations.

---END---

SECTION 10412. RECESSED BULLETIN BOARDS

1. APPLICABLE PUBLICATIONS: The following publications of the issues listed below, but referred to thereafter by basic designation only, form a part of this specification to the extent indicated by the references thereto.

1.1 Federal Specifications:

DD-G-1403B & Am 1	Glass, Plate (Float), Sheet, Figured, and Spandrel Heat Strengthened and Fully Tempered.
QQ-A-200/9C & Am 1	Aluminum Alloy Bar, Rod, Shapes, Tube, and Wire, Extruded 6063.

1.2 National Association of Architectural Metal Manufacturer's (NAAMM) Publication:

Metal Finishes Manual (Finish Designation), August 1969.

2. QUALITY CONTROL: Approvals, except those required for field installation, field application and field tests, shall be obtained before delivery of materials to the project site.

3. SUBMITTALS:

3.1 Tests and Certificates: The testing requirements for materials incorporated in referenced documents will be waived provided the Contractor submits certificates from the manufacturer stating that materials furnished for this project conform to all requirements of this specification and the referenced documents. Copies of the test reports need not be submitted except as specifically requested by the Contracting Officer.

3.1.1 Sample Certificate: The certificate shall not contain statements that could be interpreted to imply that the product does not meet all requirements specified, such as "as good as"; "achieve the same end use and results as materials formulated in accordance with the referenced specification"; "equal or exceed the service and performance of the specified material". The certificate should simply state that the product conforms to all requirements specified.

SAMPLE CERTIFICATE

The manufacturer hereby certifies that all following products being furnished for this project conform to all requirements of the project specifications and the respective reference specifications:

MANUFACTURER AND PRODUCT	REFERENCE SPECIFICATION
John Doe Company Aluminum Trim	QQ-A-200/9C & Am 1

SIGNATURE AND TITLE

3.2 Shop Drawings: Shop drawings shall be submitted and approved before delivery of materials to the site. Shop drawings shall show types, sizes, installation, and anchoring details.

3.3 Samples: The following samples of materials shall be submitted for approval before the work is started.

(1) Frame: Two units 12 inches long, with finish specified.

(2) Hinges: Two units 12 inches long, with finish specified.

(3) Trim: Two units 12 inches long, with finish specified.

(4) Back Panel: Two units 12 inches by 12 inches, of color specified.

(5) Backer Board: Two units 12 inches by 12 inches.

(6) Lock: One unit with finish specified.

(7) Glass: Two units 12 inches by 12 inches.

3.4 Manufacturer's Installation Procedures: Manufacturer's currently recommended installation procedures shall be submitted and approved. Installation procedures shall accompany shop drawings.

4. DELIVERY, STORAGE, AND PROTECTION: Units shall be delivered to the site in the original sealed containers or packages and shall bear the manufacturer's name and brand designation. Units shall be stored and handled in a manner to protect them from damage during the entire construction period.

5. MATERIALS:

5.1 Frame: Extruded aluminum 6063-T5 alloy conforming to QQ-A-200/9, 1-1/2 inch by 3 inch hollow tube.

5.2 Trim: Extruded aluminum 6063-T5 alloy conforming to QQ-A-200/9, 1 inch by 1 inch by 1/16 inch aluminum angle.

5.3 Hinges: Continuous aluminum piano type.

5.4 Back Panel: Natural cork vinyl color impregnated, 1/4 inch thick. Color shall be black.

5.5 Backer Board: Hardboard, 1/4 inch thick.

5.6 Adhesive: Polyvinyl type, or as recommended by bulletin board manufacturer.

5.7 Lock: Flat key tumbler type, with finish to match frame.

5.8 Glass: 1/4 inch thick clear tempered polished plate glass conforming to DD-G-1403, Kind FT, Condition A, Type I, Class 1.

6. FINISH: All exposed aluminum surfaces shall have a AA-M10-C22-A42 color anodized finish in accordance with the requirements of NAAMM's "Metal Finishes Manual". Finish color shall be black. Finish shall match in appearance or fall within the two extremes of color range of the approved samples.

7. FABRICATION: Recessed bulletin boards shall be prefabricated units, complete, with inside depth of case not less than 1-13/16 inches. All corners shall be mitered and reinforced with 1/4 inch by 2-1/2 inch by 2-1/2 inch aluminum angles. No exposed fastening devices allowed. Back panel shall be laminated to backer board with adhesive. Recessed bulletin boards shall be a completely assembled unit when shipped from the point of manufacturer.

8. INSTALLATION: Recessed bulletin boards shall be installed in accordance with approved shop drawings and manufacturer's directions. After installation, exposed surfaces shall be thoroughly cleaned, and all damaged work shall be restored to its original condition, or replaced with new work at no expense to the Government.

---END---

SECTION 10441. INTERIOR SIGNAGE

1. APPLICABLE PUBLICATIONS: The following publications of the issues listed below, but referred to thereafter by basic designation only, form a part of this specification to the extent indicated by the reference thereto:

1.1 Federal Specification:

L-P-508H Plastic Sheet, Laminated, Decorative and Nondecorative

2. QUALITY CONTROL: Approvals, except those required for field installations, field applications, and field tests, shall be obtained before delivery of material or equipment to the project site.

3. SUBMITTALS:

3.1 Shop Drawings: Shop drawings shall be submitted to and approved by the Contracting Officer before work is started. Submit five sets of shop drawings for each type of sign.

3.1.1 Shop drawings shall include details of fabrication and graphics, installation details, templates and location dimensions, and installation methods.

3.2 Samples: Duplicate samples of each sign type shall be submitted to and approved by the Contracting Officer before any further work is fabricated or delivered to the job.

3.2.1 Approved samples may be used in the work provided they are in new condition, and are so identified.

3.3 Certifications: Certificates stating that all materials are compatible for the uses proposed shall be approved and submitted to the Contracting Officer for record purposes.

3.4 Identification: Interior signage, directories and identification devices are identified on the drawings by letters "GA", "GB", "GC", "GD", "GE", "GF". These letters indicate the type of unit required. Individual units in each type are further identified by schedules or succeeding numerals to indicate copy and location.

4. DELIVERY, STORAGE AND HANDLING: Deliver all materials in protective packaging that will prevent scratching or damage. Store in original unopened packages and handle to the point of installation in protective coverings.

5. MATERIALS: Materials shall conform to referenced specifications and requirements as specified herein.

5.1 Plastic Sheet, Facing: Water clear cast acrylic sheet, 90155 surface, of thickness noted.

5.2 Laminating Material: Closed cell plastic foam tape, black double adhesive coated, 1/16-inch thick. Confirm compatibility with plastic materials. Non-visable adhesives may be used to laminate plastic sheets as recommended by material manufacturer.

5.3 Plastic Sheet Backing: Opaque acrylic sheet or styrene or vinyl sheet, of thickness noted.

5.4 Plastic Laminate: Conform to Federal Specification L-P-508. Flame spread rating shall be less than 25 and smoke development rating less than 50 for sheets used on vertical surfaces.

5.5 Anchorage: Toggle bolts, expansion anchors, contact cement mastic or other suitable and secure device depending on material to which mounted.

5.6 Paint: Shall be selected color, enamel of the alkyd resin type or acrylic based lacquer. Confirm compatibility with plastic sheets.

5.7 Insert Strips: Acrylic strips designed for transfer lettering and for easy insertion and removal.

5.8 Transfer Lettering: Shall be die-cut vinyl, pressure sensitive, prespaced normal letter spacing, for direct application to smooth surfaces.

5.9 Letter Style: Type face for all graphics shall be Helvetica Medium, upper and lower case letters.

5.10 Graphics: Except for transfer lettering, all graphics shall be applied by silk screen process.

6. INTERIOR SIGNAGE TYPES:

6.1 Sign Type "GA": Identification and directional sign mounted in dropped ceilings in corridors and control stations.

6.1.1 Background: Acrylic, black opaque, high gloss.

6.1.2 Letters and Graphics: White translucent, except for word "EXIT" and exit arrows which shall be red translucent; screen printed. Letters for word "EXIT" shall be 6 inches high.

6.1.3 Light Seals: Back installed devices shall be installed behind butt joints and at 90-degree corners of background to assure light-tight joints in case of movement.

6.1.4 Individual Sign Copy and Location: Identified by numerals succeeding the letters "GA".

6.2 Sign Type "GB": Identification and directional sign units, wall mounted, in public areas. Modular units with internal base panel, mechanically attached to wall; Series 600 design.

6.2.1 Case and Face: Acrylic, black opaque, high gloss; see-thru fronts shall be clear acrylic.

6.2.2 Letters and Graphics: White opaque, screen printed.

6.2.3 Modular Size: Units are 36 inches by 36 inches with 2-inch acrylic case frame depth. Mount in groups of two units stacked or four units square.

6.2.4 Individual Sign Copy, Module Arrangement and Location: Identified by numerals succeeding letters "GB".

6.3 Sign Type "GC": Directory case, personnel, interchangeable metal name strips with magnetic sheet backing, modular, internal base panel, mechanically attached to wall; Series 600 design.

6.3.1 Case and Face: Acrylic, black opaque for edges; clear acrylic face.

6.3.2 Modular Size: 36 inches by 36 inches with 2-inch acrylic case frame depth. Mount two modular units stacked.

6.3.3 Magnetic Sheeting: Backing, visible behind clear face, shall be black; magnetize to hold metal name strips rigid.

6.3.4 Metal Name Strips: 36 inches long; provide a total of eighteen strips 1 inch high, each with twelve die-cut letters; a total of eighteen strips 1 inch high, blank; a total of forty-eight strips 1/2 inch high, each with eighteen die-cut letters, and a total of twenty-four strips 1/2 inch high, blank.

6.3.5 Directory Sign Names: Will be furnished by Contracting Officer; details and location identified as "GC-1".

6.4 Sign Type "GD": Identification, graphics and push plate mounted on doors (both leafs of double doors); blind, positive and permanent attachment to oak-faced factory finished doors and to plastic laminate covered doors.

6.4.1 Background: Acrylic sheet, opaque; color, Medium Bronzetone.

6.4.2 Letters, Numbers and Graphics: White opaque, screen printed.

6.4.3 Mounting Heights: Details are indicated on the Drawings.

6.4.4 Individual Sign Copy and Location: Identified on schedule entitled "Interior Signage Type GD".

6.5 Sign Type "GE": Room identification, wall-mounted; blind and permanent back mounting.

6.5.1 Background: Acrylic, opaque; color, Medium Bronzetone.

6.5.2 Letters and Numerals: White, opaque, screen printed.

6.5.3 Individual Sign Copy and Location: Identified on schedule entitled "Interior Signage Type GE".

6.6 Sign Type "GF": Personal identification, wall-mounted; blind and permanent back mounting.

6.6.1 Background: Acrylic, laminated, two layers; top sheet, clear; back sheet, opaque; color, Medium Bronzetone.

6.6.2 Removable Section: Back sheet shall have a 1-inch high by width of sign side removable name strip, opaque; color, Bronzetone.

6.6.3 Letters for Removable Section: Die-cut vinyl, pressure sensitive, white; furnish sixteen press-on letters for each sign.

6.6.4 Permanent Letters and Numerals: Die-cut vinyl, sub-surface, white.

6.6.5 Chart Holder: Clear acrylic back, front, sides and bottom. Attach to wall with mechanical fasteners and mount "GF" sign on face as scheduled.

6.6.6 Individual Sign Copy: Will be furnished by Contracting Officer; sign locations are identified on schedule entitled "Interior Signage Type GF".

6.7 Sign Type "GG": Patient identification, room and bed number; wall-mounted; blind and permanent back mounting.

6.7.1 Background: Acrylic, laminated, two layers; top sheet, clear; back sheet, opaque; color, Medium Bronzetone.

6.7.2 Card Slot: Provide slots for removable patient name cards furnished by the Government. Provide slot for each patient bed.

6.7.3 Numerals and Letters: Opaque white, screen printed.

6.7.4 Individual Sign Copy and Location: Identified on schedule entitled "Interior Signage Type GG".

6.8 Sign Type "GH": Room identification and room numbers; door mounted, full width of single and double doors, blind and permanent back mounted on oak veneer doors or plastic laminate covered doors.

6.8.1 Background: Plastic laminate, Color "C" (refer to FINISH AND COLOR SCHEDULE).

6.8.2 Letters: Die-cut, vinyl, pressure sensitive press-on; color, White.

6.8.3 Individual Sign Copy and Location: Indicated on schedule entitled "Interior Signage Type "GH".

6.9 Special Wall Graphics: Floor identification graphics for elevator lobbies in the North Tower. There are ten separate lobbies where installations are required. Wall or jamb mount with blind, permanent back mounting adhesives. Fabricate and install as indicated on Drawings.

6.9.1 Background: Plastic laminate; colors vary by floors (refer to drawings and FINISH AND COLOR SCHEDULE). Flame spread rating shall be less than 25 and smoke development rating less than 50. Furnish certificate for ratings or mark each sheet.

6.9.2 Wall Mounted Graphics: Numbers shall be cut out of plastic sheets; attach sheets to wall using flush vertical joints.

6.10 Floor Numbers: Cut-out plastic laminate floor indicator numerals shall be provided on the jamb of each elevator (ten total) at each floor. Numerals shall match design of numbers on wall graphics.

6.11 Artwork: Provide artwork for all signs and vinyl diecut letters as required.

6.12 Dedication Plaque: Plaque shall be custom fabricated in cast bronze; background brush finish with top side of letters and seal, polished; verify final copy prior to casting.

7. FABRICATION:

7.1 Perform all operations with maximum skill using only trained mechanics.

7.2 Do all cutting with power saws of types recommended by plastics manufacturer to provide perfect work. Provide square edges, sand smooth and paint same color as backgrounds.

7.3 Cut and set square all laminating material, providing straight, true guides for inserts.

7.4 Job verify lengths of Type "GA" signs.

8. INSTALLATION:

8.1 Installer shall examine the substrates and conditions which the specialty signs are to be installed and notify the Contractor in writing of conditions detrimental to the proper and timely completion of the work. Do not proceed with the work until unsatisfactory conditions have been corrected in a manner acceptable to the installer.

8.2 Use mechanical fastening for installing Type "GB" and "GC" signs and for chart rack used with Type "GF" sign.

8.3 Install sign units and components at the locations shown or scheduled, securely mounted with concealed fasteners or adhesives, unless otherwise shown. Attach signs to substrates in accordance with the manufacturer's instructions, unless otherwise shown.

8.4 The dedication plaque shall be mounted with mechanical attachments to the free standing rock which is located in the atrium adjacent to the main lobby.

---END---

SECTION 10442. EXTERIOR SIGNAGE

1. QUALITY CONTROL: Approvals, except those required for field installation, field applications, and field tests, shall be obtained before delivery of material or equipment to the project site.

2. SUBMITTALS:

2.1 Shop Drawings: Shop drawings shall be submitted to and approved by the Contracting Officer before work is started. Submit five sets of shop drawings for each type of sign.

2.1.1 Shop drawings shall include design and detail drawings for sign modules, templates of all graphics, design and working drawings for sign structures, and assembly and erection drawings.

2.2 Catalog Data: Catalog data on all materials and equipment, and finishes, shall be approved and submitted to the Contracting Officer for record purposes.

2.3 UL Approval: Signs with internal electric devices shall be UL approved and certificates provided.

3. DELIVERY, STORAGE AND HANDLING: Provide protective packaging for exterior sign work and deliver directly to point of installation at proper time for erection. Handle to avoid damage.

4. MATERIALS:

4.1 Structural Frame: Shall be carbon steel conforming to section entitled "Structural Steel".

4.2 Foundation: Shall be minimum 4000 psi air-entrained concrete with steel reinforcement, both conforming to section entitled "Cast In Place Concrete".

4.3 Cast Aluminum Letters and Emblems: Factory die-cast, polished finish.

4.4 Lighting: Shall consist of fluorescent fixtures with high power factor reactor ballasts for cold weather operation 277 volt. Use 4 foot lamps only, 800 ma, high output rapid start. Electrical conduit and wiring for power connection shall be extended concealed in the unit and extend down through the concrete foundation, terminating in a junction box for connection by others.

4.5 Sealant: Seal all weather exposed joints with two part polysulphide type sealant.

4.6 Sign Housing: Fiber reinforced plastic (FRP), low shrink, thermo-setting polyester resins reinforced with no less than 30 percent glass fibers, not to alter light transmission or clarity or be visible through face.

5. ENGINEERING DESIGN: Fabricator shall design each sign and all components to conform to the elevations, profiles, dimensions and intended performance shown or specified.

5.1 Concealed Fastenings: It is intended that no fastenings be visible on the faces, ends or tops of sign assemblies except the minimum necessary for panel removal for servicing and relamping.

5.2 Illumination: All exterior signs, excluding the main entrance sign, shall be illuminated from inside fixtures, so designed and placed as to provide a uniform illumination of the letters with no perceptible variation in brightness, 25 minimum; 35 maximum footlamberts.

5.3 Weathertightness: Design all sign housing to afford weathertight enclosures for interior components.

5.4 Typeface: Shall be Helvetica Medium for all lettering. Refer to drawings for sign designs.

5.5 Design Loads: Internal steel structure, base attachments and thickness of reinforced fiberglass cases shall be designed to withstand high impact loads and extremely high wind loads prevalent in this area.

5.6 Artwork: Provide all artwork for signs.

6. EXTERIOR SIGNAGE TYPES:

6.1 Sign Type "GX": Road identification and direction; free-standing; steel interior framework attached to concrete base; copy on two sides (excluding roof-hung unit in emergency canopy); units illuminated internally, design Series 2000.

6.1.1 Case and Recessed Base: Molded reinforced fiberglass, dark colors, opaque; white backgrounds, white translucent.

6.1.2 Letters and Graphics: Translucent white letters and graphics on dark backgrounds; opaque dark letters on white translucent backgrounds; for the words "EMERGENCY" use translucent bright red letters on white translucent backgrounds, screen printed.

6.1.3 Individual Sign Copy and Location: Details shown on drawings specify color and design of typical sign and numerals; succeeding the letters "GX" identify units with copy and location. Refer to site plan for location.

6.2 Sign Type "GY": Clinic identification and direction; monolith, free-standing, flush mounted; steel interior framework attached to concrete base with anchor plates and bolts; copy on two sides; units illuminated internally; design Series 1000.

6.2.1 Case: Molded reinforced fiberglass, black opaque background for faces, sides and top.

6.2.2 Letters and Graphics: White, translucent, screen printed.

6.2.3 Individual Sign Copy and Location: Details shown on drawings; numerals succeeding the letters "GY" identify individual units with copy and location. Refer to site plan for location.

6.3 Sign Type "GZ": Building entrance identification signs at exterior of vestibules; wall-mounted monolith; one face, bottom and top exposed, back face anchored to building; units illuminated internally; design Series 1000.

6.3.1 Case molded reinforced fiberglass, black opaque.

6.3.2 Letters and Graphics: White, translucent, screen printed.

6.3.3 Individual Sign Copy and Locations: Details shown on drawings; numerals succeeding letters "GZ" identify individual units with copy and location.

6.4 Main Entrance Sign: Facility identification sign; die-cast aluminum letters and cast cut-out emblem; two sets of letters and two emblems required; brick sign structures and recessed ground lighting by others.

6.4.1 Letters and Emblems: Polished aluminum finish; sizes, types and design details shown on drawings.

6.4.2 Mounting: Project mount letters and emblems and attach to brick with concealed lead shield inserts.

7. FABRICATION: Fabricate and finish exterior signs in strict accordance with approved fabrication drawings. Completely assemble all parts and components in the factory and test for proper operation. Package and ship signs in as large pieces as practical.

8. INSTALLATION: Install all exterior signs in strict accordance with approved erection drawings. Set work level and plumb and anchor securely, ready for electrical connection specified in section entitled "Electrical". After connection, test lighting in place, remove all packing and protective coverings, and leave signs in operating and orderly condition. Clean down all finishes and leave ready for operation. Replace final grades around each installation.

---END---

SECTION 10550. POSTAL SPECIALTIES

1. APPLICABLE PUBLICATIONS: The following publications of the issues listed below, but referred to thereafter by basic designation only, form a part of this specification to the extent indicated by the references thereto:

1.1 United States Postal Service (USPS):

Publication 17 September, 1977	Apartment House Main Receptacles Regulations and Instructions.
PS STD 4B(RDD) May, 1975	United States Postal Service Standard Receptacles, Apartment House Mail.

2. QUALITY CONTROL: Approvals, except those required for field installation, field application and field tests, shall be obtained before delivery of materials to the project site.

3. SUBMITTALS:

3.1 Tests and Certificates: The testing requirements for materials incorporated in referenced documents will be waived provided the Contractor submits certificates from the manufacturer stating that materials furnished for this project conform to all requirements of this specification and the referenced documents. Copies of the test reports need not be submitted except as specifically requested by the Contracting Officer.

3.1.1 Sample Certificate: The certificate shall not contain statements that could be interpreted to imply that the product does not meet all requirements specified, such as "as good as"; "achieve the same end use and results as materials formulated in accordance with the referenced specification"; "equal or exceed the service and performance of the specified material". The certificate should simply state that the product conforms to all requirements specified.

SAMPLE CERTIFICATE

The manufacturer hereby certifies that all following products being furnished for this project conform to all requirements of the project specifications and the respective reference specifications:

MANUFACTURER AND PRODUCT	REFERENCE SPECIFICATION
John Doe Company Mail Boxes	Publication 17 and PS STD 4 (RDD)

SIGNATURE AND TITLE

3.2 Shop Drawings: Shop drawings shall be submitted and approved before delivery of materials to the site. Drawings shall show plans, elevations,

details of construction, gages of metal, fittings, mountings, installation details, and anchoring.

3.3 Samples: One sample of metal finish shall be submitted and approved before the materials are delivered to the site.

4. DELIVERY, STORAGE, AND HANDLING: Materials shall be delivered to the site in the original sealed containers or packages, and shall bear the manufacturer's name and brand designation. Where materials are covered by a referenced specification, the container or packages shall bear the specification number and type as applicable. Materials shall be stored and handled in a manner to protect them from damage during the entire construction period.

5. MATERIALS:

5.1 Mailboxes: Mailboxes shall be in accordance with USPS STD 4, Type II, horizontal rear loading, except size of each internal compartment shall be 4-1/4 inches by 3-1/2 inches by 15 inches. Mailboxes shall be fabricated in accordance with USPS STD 4 from sheet aluminum with extruded aluminum compartment doors and extruded aluminum snap on peripheral trim. Fronts of boxes and trim shall have a US 28 natural anodized aluminum finish. Numbers shall be engraved on fronts of boxes in accordance with PS STD 4 and Contracting Officer's directions.

6. INSTALLATION: Mailboxes shall be installed in accordance with Publications 17, PS STD 4, approved shop drawings, and manufacturer's directions. Install mailboxes straight and plumb with all horizontal lines level, and rigidly anchored in place to the supporting construction. Anchors shall be located so as to be concealed in the finished work.

---END---

SECTION 10601. WIRE MESH PARTITIONS

1. APPLICABLE PUBLICATIONS: The following publications of the issues listed below, but referred to thereafter by basic designation only, form a part of this specification to the extent indicated by the references thereto:

1.1 American Society for Testing and Materials (ASTM):

A36-74 Structural Steel.

1.2 American Iron and Steel Institute (ANSI):

Cold-Formed Steel Design Manual, 1968 Edition.

2. QUALITY CONTROL: Approvals, except those required for field installation, field application and field tests, shall be obtained before delivery of materials to the project site.

3. SUBMITTALS:

3.1 Tests and Certificates: The testing requirements for materials incorporated in referenced documents will be waived provided the Contractor submits certificates from the manufacturer stating that materials furnished for this project conform to all requirements of this specification and the referenced documents. Copies of the test reports need not be submitted except as specifically requested by the Contracting Officer.

3.1.1 Sample Certificate: The certificate shall not contain statements that could be interpreted to imply that the product does not meet all requirements specified, such as "as good as"; "achieve the same end use and results as materials formulated in accordance with the referenced specification"; "equal or exceed the service and performance of the specified material". The certificate should simply state that the product conforms to all requirements specified.

SAMPLE CERTIFICATE

The manufacturer hereby certifies that all following products being furnished for this project conform to all requirements of the project specifications and the respective reference specifications:

MANUFACTURER AND PRODUCT	REFERENCE SPECIFICATION
John Doe Company	
Structural Steel	ASTM A36
Cold Rolled Steel	AISI Cold Formed Steel Design Manual

SIGNATURE AND TITLE

3.2 Catalog Data: Submit complete descriptive literature for each type of partition, door, and service window. Data which describes more than one type, size, model, or item shall be clearly marked to indicate which type, size, model or item the Contractor intends to provide. Data shall be sufficient to show conformance to specified requirements.

3.3 Shop Drawings: Submit complete show drawings for partitions. Show layout, anchoring, details, materials, dimensions, finishes, and all information necessary for fabrication and installation.

4. DELIVERY AND STORAGE: Deliver materials in manufacturer's original, unopened containers or packaging with labels intact and legible. Deliver, store, and handle materials so as to prevent damage. Defective materials and damaged materials shall be replaced by the Contractor at no additional cost to the Government.

5. GENERAL REQUIREMENTS: Wire mesh partitions shall be all wire type heavy duty for extra heavy industrial use and shall be provided complete with all fasteners, capping bars, adjustable floor sockets, bracing, doors, service windows, hardware, and other items for a complete, useable, and rigid installation.

6. MATERIALS: Conform to the specifications listed and the requirements specified herein:

6.1 Steel Shapes, Plates, and Bars: ASTM A36.

6.2 Cold-Formed Steel: AISI's "Cold-Formed Steel Design Manual."

6.3 Wire Mesh: Carbon steel wire, woven diamond mesh, intermediate crimped.

6.4 Floor Sockets: Cast or forged steel or ductile iron, adjustable, approximately 2-1/2 inches high.

6.5 Heavy Duty Partitions:

6.5.1 Wire Mesh: 6 gage wire, 2-inch mesh.

6.5.2 Panel Frames: 1-1/2 by 3/4 by 1/8-inch steel channels.

6.5.3 Center Reinforcing Bar: One 1-1/2 by 3/4 by 1/8-inch channel with all wires woven through or two 1-1/4 by 5/8 by 1/8-inch channels bolted together with mesh in between.

6.5.4 Capping Bar: Structural steel channel 3-inch by 4.1-pound.

6.5.5 Corner Posts: Structural steel angles 1-3/4 by 1-3/4 by 1/8-inch, or 2-inch standard steel pipe.

6.5.6 Line Posts: Unless otherwise indicated, partitions shall be provided with flat bar line posts bolted between vertical frames. Sizes of posts shall be as follows:

Partition Height	Size of Post
7 feet to 12 feet	2-1/2 by 5/16 inch
12 feet to 16 feet	3 by 5/16 inch or 2-1/2 by 3/8 inch
16 feet to 20 feet	3-1/2 by 5/16 inch

6.5.7 Hinged Doors: Frames shall be 1-1/2 by 3/4 by 1/8-inch channels with 1-1/2 by 1/8-inch flat bar cover on 3 sides and 1-5/8 by 7/8 by 1/8-inch angle riveted to the lock stile. Provide 1-1/2 pair of heavy weight, wrought steel, non-removable pin, butt hinges riveted to the door and the door opening frame for each door.

6.6 Sliding Doors: Frames shall be 1-1/2 by 3/4 by 1/8-inch channels with 1-1/2 by 1/8-inch flat bar cover all around. Provide two 4-wheel, roller bearing hangers and steel box track for each door.

6.7 Door Opening Frames: Frames shall be the same size and shape as the vertical frames for the mesh panels.

6.8 Locks: Each door shall be provided with a mortise type lock with a 5-pin-tumbler lock cylinder on the outside and a recessed knob on the inside. Cylinders shall be keyed to master keying as directed by the Contracting Officer.

6.9 Service Windows: Slide up type, mounted in standard mesh panel reinforced with channel tracks. Opening shall be 24 inches wide by 15 inches high unless otherwise indicated. Provide two spring loaded latches, operable only from the inside, to lock window in open and closed positions. Shelf shall be formed of 12 gage sheet steel, 12 inches deep by 25 inches wide, unless otherwise indicated.

7. FABRICATION:

7.1 Standard Panels: Wire shall be woven into diamond mesh, intermediate crimped, and securely clinched to frames. All joints shall be mortised and tenoned. Wire shall be continuous at center reinforcing bars, either woven through a single channel or bolted between 2 channels. Panel vertical frames shall have 3/8-inch bolt holes 18 inches o.c.

7.2 Doors and Service Windows: Construction shall be similar to that specified for panels. Wire mesh shall be the same as that used in the adjacent partition panels.

7.3 Finish: All ferrous metal shall be thoroughly cleaned, phosphatized, and painted with gray enamel in the shop.

8. INSTALLATION:

8.1 Wire Mesh Partitions: Install plumb, level, and true to line, within a tolerance of 1/8 inch in the height and in the run of the partition. Anchor floor sockets to the floor with expansion bolts. Vertical frames and posts shall be bolted together with 3/8 inch bolts 18 inches o.c. Top frames shall be secured to a continuous capping bar with 1/4-inch diameter U bolts not more than 28 inches o.c. In addition, anchor wire mesh partitions to overhead structure in accordance with manufacturer's directions and approved shop drawings.

8.2 Doors and Service Windows: Install in accordance with manufacturer's recommendations. Adjust as required so that doors, windows, and hardware operate freely and properly.

8.3 Touch-up: All scratches, abrasions, and other damage to shop-painted surfaces shall be cleaned and painted to match the shop-applied finish.

---END---

SECTION 10625. OPERABLE WALL

1. APPLICABLE PUBLICATIONS: The following publications of the issues listed below, but referred to thereafter by basic designation only, form a part of this specification to the extent indicated by the references thereto:

1.1 American Society for Testing and Material (ASTM) Publications:

E84-77	Test for Surface Burning Characteristics of Building Materials.
E90-75	Laboratory Measurement of Airborne-Sound Transmission Loss of Building Partitions.
E557-77	Standard Recommended Practice for Architectural Application and Installation of Operable Partitions.

2. QUALITY CONTROL: Approvals, except those required for field installation, field applications and field tests, shall be obtained before delivery of materials to the project site.

2.1 Visual Test: Visual test shall be conducted in the presence of the Contracting Officer. The visual test shall be conducted with all room lights turned on in the space on the side of the folding partition. The space on the other side of the folding partition shall be darkened. There shall be no light leakage from the lighted space to the darkened space.

3. SUBMITTALS:

3.1 Tests and Certificates: The testing requirements for materials incorporated in referenced documents will be waived provided the Contractor submits certificates from the manufacturer stating that materials furnished for this project conform to all requirements of this specification and the referenced documents. Copies of the test reports need not be submitted except as specifically requested by the Contracting Officer.

3.1.1 Sample Certificate: The certificate shall not contain statements that could be interpreted to imply that the product does not meet all requirements specified, such as "as good as"; "achieve the same end use and results as materials formulated in accordance with the referenced specification"; "equal or exceed the service and performance of the specified material". The certificate should simply state that the product conforms to all requirements specified.

SAMPLE CERTIFICATE

The manufacturer hereby certifies that the following products being furnished for this project conform to all requirements of the project specifications and the respective reference specifications:

MANUFACTURER AND PRODUCT	REFERENCE SPECIFICATION
John Doe Company Operable Wall Model XXXX	ASTM E84 ASTM E90

SIGNATURE AND TITLE

3.2 Catalog Data: Submit complete descriptive literature of operable wall. Data which describe more than one type, size, model, or item shall be clearly marked to indicate which type, size, model, or item the Contractor intends to provide. Data shall be sufficient to show conformance to specified requirements.

3.3 Shop Drawings: Submit complete shop drawings for operable wall. Show layout, elevation, section, details, materials, dimensions, finishes, and all information necessary for fabrication and installation including:

(a) Dimensions of stacked operable wall.

(b) Total weight of stacked operable wall.

(c) Methods of fastening track and jamb to opening.

3.4 Laboratory Tests: Submit complete test report from independent acoustical testing laboratory. Report shall show that operable wall meets the full requirements of this specification as a fully operable system.

4. DELIVERY AND STORAGE: Deliver materials in manufacturer's original, unopened containers or packaging with labels intact and legible. Deliver, store, and handle materials so as to prevent damage. Defective materials and damaged materials shall be replaced by the Contractor at no additional cost to the Government.

5. REQUIREMENTS: Operable wall shall be supported from overhead track without floor guides, and shall be provided complete with all hardware, track, and accessories necessary for satisfactory operation. Operable wall shall be completely factory-finished by a manufacturer who has been regularly engaged in the manufacture of operable walls for a minimum of three years. The panels shall be concealed completely with genuine wood veneer wall covering finish. Construction shall conform to the sound transmission class certification description. Sound transmission class shall be not less than 43 to 47 when the operable wall is tested in accordance with ASTM E90.

6. MATERIALS: The operable wall shall consist of a series of top supported, continuously hinged, manually operated panels. The complete operable wall shall have a flame spread rating of 75 or less and a smoke developed rating of less than 100 when tested in accordance with ASTM E84.

10625

6.1 Panel Construction: Panels shall be nominal 3 inches thick and of non-combustible construction. Panel skins shall be 24 gage (.028 inch minimum) steel factory assembled to a 16 gage steel frame. Top channel assembly shall be reinforced to support the suspension components. Interior insulation and acoustical treatment shall be appropriate for the specified acoustical performance; required panel hanging weight range shall be 8 to 10 pounds per square foot. Wrap-around skin/panel construction shall not require or permit vertical trim on panel faces and shall, with astragal seals, provide a minimum groove appearance at vertical panel joints; exposed fasteners on panel face will not be allowed. Panel finish shall be Laminating Services of Louisville, Kentucky, Pliant Wood, consisting of genuine flat cut white oak veneer 1/85 inch thick bonded to specially prepared cotton backing under heat and pressure, and mechanically processed to make it pliable. Finish shall be adhesive bonded at factory to the entire panel face and wrapped under the astragal trim. Finishes bonded/stapled at panel edges only shall not be permitted.

6.2 Sound Seals: Vertical seals between panels shall consist of tongue and groove configuration, extruded aluminum astragals incorporating two extruded vinyl finger seals per astragal. Horizontal top seals shall be continuous-contact, dual finger and bulb of extruded vinyl. Automatic floor seals shall provide 1 inch nominal operating clearance and shall automatically drop during the final closing action of the partition. Downward seal pressure shall assure an acoustical seal and resist panel movement. Exposed seal channel shall have a satin black finish.

6.3 Suspension System: The suspension system shall consist of a continuous 3 inches by 3 inches by 3/16 inch cold rolled steel track. The track shall be supported by adjustable steel hanger brackets connected to the structural support by two 1/2 inch diameter threaded rods. Alternate panels shall be supported by a trolley assembly consisting of four flangeless steel wheels, 1-5/8 inch in diameter, with steel ball bearings. Trolley assemblies shall be attached to panels with 3/4 inch diameter adjustable pendant bolts. Provide manufacturer's standard prepainted steel soffit and guide rails and guide blocks as indicated.

6.4 Panel Trim and Hardware Finish: All hinges, astragals and seal trim shall be satin black finish. Operating hardware shall be brushed chrome and satin black.

6.5 Overhead Support, Blocking and Header Enclosure: Overhead support, blocking and header enclosure shall be as detailed and shall be installed in accordance with ASTM E557. Pre-punch overhead supports to receive hanger rods.

7. INSTALLATION:

7.1 General: Operable wall shall be installed by an authorized representative of the manufacturer in accordance with approved shop drawings. Before installation is started, openings shall be made plumb and level to

within the tolerances indicated on approved shop drawings and adequate provisions shall be made to support the operable wall and track from the construction overhead. Track shall be anchored to steel framing as indicated. Operable wall shall be adjusted so wall may be opened or closed from any position with a minimum horizontal force applied at the pull bar or handle.

7.2 Cleaning: Upon completion of installation, thoroughly clean all surfaces, by the method recommended by the manufacturer.

7.3 Protection: During installation care shall be taken to protect the operable wall from damage. Surfaces that are damaged prior to completion and acceptance shall be restored to their original condition or new replacements shall be provided at no expense to the Government.

---END---

SECTION 10750. WARDROBE UNITS

1. QUALITY CONTROL: Approvals, except those required for field installations, field applications and field tests, shall be obtained before custom fabrication is started and before delivery of materials to the project site.

2. SUBMITTALS:

2.1 Certificates: The Contractor shall submit certificates from the manufacturer stating that materials furnished for this project conform to all requirements of this specification.

2.1.1 Sample Certificate: The certificate shall not contain statements that could be interpreted to imply that the product does not meet all requirements specified, such as "as good as"; "achieve the same end use and results as materials formulated in accordance with the referenced specification"; "equal or exceed the service and performance of the specified material". The certificate should simply state that the product conforms to all requirements specified.

SAMPLE CERTIFICATE

The manufacturer hereby certifies that the following product being furnished for this project conforms to all requirements of the project specifications.

MANUFACTURER AND PRODUCT

John Doe Company
Wardrobe Units

SIGNATURE AND TITLE

2.2 Shop Drawings: Shop Drawings shall be submitted and approved before delivery of materials to the site. Shop drawings shall show type, size, installation, and anchoring details.

2.3 Manufacturer's Installation Procedures: Manufacturer's currently recommended installation procedures shall be submitted and approved. Installation procedures shall accompany shop drawings.

2.4 Samples: Submit two 12 inch by 12 inch corner samples of panels having laminated plastic of finish specified.

3. DELIVERY, STORAGE, AND PROTECTION: Materials shall be delivered to the site in the original sealed containers or packages and shall bear the manufacturer's name and brand designation. Materials shall be stored and handled in a manner to protect them from damage during the entire construction period.

4. MATERIALS:

4.1 Wardrobe Unit, 30 Inch by 72 Inch, Cantilevered From Wall (Item BA-42): Prefabricated wardrobe units shall be equal to Vogel-Peterson's Model CW5 and shall be provided at locations indicated. Bottom and top brackets shall be fabricated from cast aluminum with painted black finish. Bottom tubular type shelf shall be fabricated from 3/4 inch diameter steel tubing with walnut vinyl clad finish. Top track for hangers shall be fabricated from steel with a painted black finish. Top track shall be furnished with nylon receptacles. Each wardrobe unit shall be provided with four "ball top" red oak wood hangers. The 30 inch by 72 inch panels shall be fabricated from 40-45 psi density fiberboard. All edges and face panels shall be provided with red oak plastic laminate finish with back side of panels having manufacturer's standard brown color finish. Provide all attachment devices, including clips, screws, anchors, etc. for an approved installation.

5. INSTALLATION: Wardrobe units shall be installed in accordance with approved shop drawings and manufacturer's recommendations. After installation, protect surfaces from damage. If damages occur, repair damage to meet the approval of the Contracting Officer or provide new wardrobe units at no additional cost to the Government.

---END---

SECTION 10801. METAL TOILET AND BATH ACCESSORIES

1. APPLICABLE PUBLICATIONS: The following publications of the issues listed below, but referred to thereafter by basic designations only, form a part of this specification to the extent indicated by the references thereto:

1 1 Federal Specifications:

WW-P-541/8A & Am 1	Plumbing Fixtures, (Accessories Land Use) (Detail Specifications).

2. QUALITY CONTROL: Approvals, except those required for field installations, field applications, and field tests, shall be obtained before delivery of material to the project site.

3. SUBMITTALS:

3.1 Certificates: Submit certificates from the manufacturer attesting that all products conform to all requirements of this specification and of reference documents.

3.1.1 Sample Certificate: The certificate shall not contain statements that could be interpreted to imply that the product does not meet all requirements specified, such as "as good as"; "achieve the same end use and results as materials formulated in accordance with the referenced specification"; "equal or exceed the service and performance of the specified material". The certificate should simply state that the product conforms to all requirements specified.

SAMPLE CERTIFICATE

The manufacturer hereby certifies that the following products being furnished for this project conform to all requirements of the project specifications and of the reference specifications listed:

MANUFACTURER AND PRODUCT	REFERENCE SPECIFICATION
John Doe Company Toilet Tissue Dispenser	WW-P-541/8

SIGNATURE AND TITLE

3.2 Catalog Data: Submit complete descriptive literature for all items specified. Data which describe more than one type, size, model, or item shall be clearly marked to indicate which type, size, model, or item the Contractor intends to provide. Data shall be sufficient to show conformance to specified requirements.

4. DELIVERY AND STORAGE: Metal toilet and bath accessories shall be delivered to the site ready for installation in unopened containers, labeled plainly with the manufacturer's names and brands. Accessories shall be stored in safe, dry locations and shall not be unpacked until needed for installation. Handling and installation of materials shall be in a manner that will protect them from damage.

5. MATERIALS:

5.1 General: Accessories shall conform to the applicable requirements of specification WW-P-541/8, except as specified otherwise. Surface-mounted accessories shall be mounted on concealed backplates, except where specified otherwise. Accessories without backplates shall have concealed fasteners.

5.2 Materials and Fabrication: Accessories shall be fabricated in accordance with good commercial practice, with welds ground smooth. Bending, flanging, drawings, forming, and similar operations shall be preformed in a manner to insure that there are no ruptures, cracks, wrinkles, sharp exposed edges or other defects. Flanges of recessed accessories shall be designed to return to walls to provide a continuous, tight-against-the-wall installation. Doors shall be warp free. Locks shall be keyed alike for each type of accessory; 2 keys shall be furnished for each lock or each group of accessories keyed alike. Locks shall be the manufacturer's standard locks of the type specified herein.

5.3 Finished: Finishes on metals shall be provided as follows, except where otherwise specified:

Metal	Finish
Stainless Steel	Satin
Carbon Steel	Bright Chromium Plate
Copper Alloy	Bright Chromium Plate

5.4 Item BA-1; Toilet Tissue Dispensers (Recessed): Type I, Class 1, Mounting R, Style K, Design a, 6-1/4 inches square, and with chrome plated plastic roller. Units shall be furnished with plated steel mounting clamp. Dispensers shall be plain carbon steel or copper alloy.

5.5 Item BA-2; Shower Curtain Rails: Suitable length, not less than 1-1/4 inch O.D., having wall thickness of not less than 18 gage, of 18-8 Type 304 stainless steel and with one piece die-formed 1/8 inch thick Type 304 stainless steel flanges at wall, with suitable fasteners.

5.6 Item BA-3; Robe Hooks, Single: Flange shall be 2 inches square, hook shall project from wall 2 inches, and hook shall be 1-1/4 inch square. Hook and flange shall be fabricated from 18-8 Type 304 heavy gage stainless steel with stainless steel locking set screw. Concealed wall plate shall be

fabricated from 18-8 Type 304 18 gage stainless steel. Flange shall be equipped with concealed 16 gage mounting bracket which locks to concealed wall plate.

5.7 Item BA-4; Robe Hooks, Double: Same as specified in Paragraph entitled "Item BA-3; Robe Hooks, Single", except hook shall be a contoured 4 inch wide stainless steel bar forming hook at each end.

5.8 Item BA-5; Facial Tissue Dispenser (Recessed): Type I, Class 4, Mounting R. Dispensers shall be recessed mounted with capacity of 300 two-ply facial tissue. Face of dispenser shall be 11-3/8 inches by 5-3/4 inches and container shall be 10-1/2 inches by 4-15/16 inches by 3-3/4 inches. Dispenser face shall be fabricated from 304 stainless steel and container fabricated from galvanized steel.

5.9 Item BA-6; Paper Towel Dispenser (Surface Mounted): Type I, Class 3, Mounting S, Style N. Door shall have full length stainless steel piano hinge with tumbler lock. Dispensers shall be heavy duty, antipilfer type and shall be stainless steel ANSI 300 series. Unit shall dispense C-fold paper towels without adapters and shall have a capacity of not less than 400 paper towels. Units shall be 10-3/4 inches by 14-3/4 inches by 4 inches.

5.10 Item BA-7; Multi-Purpose Unit With Paper Towel Dispenser and Shelf (Recessed): Type I, Class 3, Mounting R, Style P. Rough-in box and towel cabinet concealed behind wall. Rough-in box shall be heavy gage galvanized steel, welded construction. Towel cabinet (within rough-in box) shall be 18-8 Type 304 heavy gage stainless steel, welded construction. Lower section shall be 18-8 Type 304 heavy gage stainless steel, welded construction. Flange shall be 22 gage stainless steel; drawn, one-piece seamless construction. Paper towel dispenser shall be 18-8 Type 304 heavy gage stainless steel with a capacity of 600 C-fold towels. Towel tray shall be 18-8 Type 304, 18 gage stainless steel equipped with two hinged push-up flaps for bottom filling. Shelf shall be 18-8 Type 304, 22 gage stainless steel. Unit shall be 15-7/8 inches by 30-9/16 inches by 4-5/8 inches.

5.11 Item BA-8; Multi-Purpose Unit With Mirror, Paper Towel Dispenser, and Shelf (Recessed): Type I, Class 3, Mounting R, Style P. Flange shall be 18-8 Type 304, 22 gage stainless steel, drawn, one piece seamless. Door shall be 18-8 Type 304 stainless steel with full length stainless steel piano hinge and tumbler lock. Cabinet shall be 18-8 Type 302 heavy gage stainless steel, welded construction. Shelf shall be 18-8 Type 304, 22 gage stainless steel. Mirror shall be No. 1 quality, 1/4 inch thick by 14-7/8 inches by 18 inches plate galss, electrolytically copper backed, polished edges, fully protected with padding and have a 15 year guarantee against silver spoilage. Paper towel dispenser shall be 18-8 Type 304, 22 gage stainless steel with a capacity of 500 C-fold paper towels. Unit shall be 15-3/16 inches by 28-5/8 inches by 3-15/16 inches.

5.12 Item BA-9; Multi-Purpose Unit With Mirror, Paper Towel Dispenser and Shelf (Surface Mounted): Same as specified in Paragraph entitled "Item BA-8; Multi-Purpose Unit With Mirror, Paper Towel Dispenser and Shelf (Recessed)", except unit shall be surface mounted and provided with stainless steel skirt for surface mounting.

5.13 Item BA-10; Toilet Tissue Dispensers (Surface Mounted) Type I, Class 1, Mounting S, Style G. Dispensers shall be fabricated from Type 304 stainless steel and door shall have a tumbler lock. Unit shall be 5-7/8 inches wide by 10-9/16 inches high with depth at door of 5-5/8 inches.

5.14 Item BA-11; Combination Paper Towel Dispenser and Waste Receptacle (Recessed): Type I, Class 3, Mounting R, Style T modified. Cabinet shall be 18-8 Type 304 heavy gage stainless steel, welded construction. Flange shall be 22 gage stainless steel, drawn one piece seamless construction. Doors shall be 18-8 Type 304, 22 gage stainless steel, enclosed double pan construction, warp resistant, and equipped with full length stainless steel piano hinges and tumbler locks. Paper towel dispenser shall be 18-8 Type 304, 22 gage stainless steel with a capacity of 600 C-fold paper towels. Waste container shall be rigid molded plastic, leakproof, 10.5 gallon capacity and removable. Unit shall be 12-3/16 inches wide by 72 inches high.

5.15 Item BA-12; Combination Paper Towel Dispenser and Waste Receptacle (Recessed, for 4 Inch Wall): Type I, Class 3, Mounting R, Style Q. Same as specified in Paragraph entitled "Item BA-11; Combination Paper Towel Dispenser and Waste Receptacle (Recessed)", except unit has one door for paper towel cabinet; dispenses 600 C-fold paper towels; semi-recessed waste container fabricated from 18-8 Type 304, 22 gage stainless steel, top and bottom edges hemmed, capacity of 12 gallons, and secured to cabinet by tumbler lock; and unit shall be 15-3/16 inches wide by 54 inches high.

5.16 Item BA-13; Grab Bar (Horizontal Mounted): Type IV, Class 2, Form a. Stainless steel tube shall be 1-1/2 inch OD, with a wall thickness of not less than 18 gage. Flanges shall be 3/16 inch thick stainless steel plate 3 inch diameter and each shall have 3 countersunk screw holes for attachment to wall. Ends of grab bar shall pass thru flanges and be heliarc welded to form one structural unit. Units located in handicap areas shall have satin finish with peened gripping surface. Units shall be 48 inches long with 3 flanges, one on each end and one in the center, and dimension from wall to grab bar shall be 2-5/8 inches. One thru wall anchor assembly, consisting of zinc chromate bonderized 3 inches by 4 inches by 10 gage steel plates, plated steel carriage bolt, connectors and spacers, shall be provided for each flange located at solid wall construction. Concealed stud wall anchor plate assemblies consisting of 12 gage steel plate (with 1/4 inch-20 threaded holes extruded to give .200 inch minimum usable thread per hole) of length recommended by material manufacturer and 300 Series stainless steel machine screws 1-1/2 inch long, shall be provided for units located at stud wall construction.

5.17 Item BA-14; Grab Bar (45 Degree Mounted): Type IV, Class 2, Form d and e. Stainless steel tube shall be 1-1/2 OD, with a wall thickness of not less than 18 gage. Flanges shall be 3/16 inch thick stainless steel plate, 3 inch diameter and each shall have 3 countersunk screw holes for attachment to wall. Ends of grab bar shall pass thru flanges and be heliarc welded to form one structural unit. Units located in handicap areas shall have satin finish with peened gripping surface. Units shall be 36 inches long with 2 flanges, and dimension from wall to grab bar shall be 2-5/8 inches. One thru wall anchor assembly, consisting of zinc chromate bonderized 3 inches by 4 inches by 10 gage steel plates, plated steel carriage bolt, connectors, and spacers shall be provided for each flange located at solid wall construction. Concealed stud wall anchor plate assemblies consisting of 12 gage steel plate (with 1/4 inch-20 threaded holes extruded to give .200 inch minimum usable thread per hole) of length recommended by material manufacturer and 300 Series stainless steel machine screws 1-1/2 inch long, shall be provided for units located at stud wall construction.

5.18 Item BA-15; Grab Bar (90 Degree Mounted): Type IV, Class 2, Form b and c. Stainless steel tube shall be 1-1/2 OD, with a wall thickness of not less than 18 gage. Flanges shall be 3/16 inch thick stainless steel plate, 3 inch diameter, and each shall have 3 countersunk screw holes for attachment to wall. Ends of grab bars shall pass thru flanges and be heliarc welded to form one structural unit. Units located in handicap areas shall have satin finish with peened gripping surface. Units shall be 16 inches by 32 inches with three flanges, and dimension from wall to grab bar shall be 2-5/8 inches. One thru wall anchor assembly, consisting of zinc chromate bonderized 3 inches by 4 inches by 10 gage steel plates, plated steel carriage bolt, connectors, and spacers, shall be provided for each flange located at solid wall construction. Concealed stud wall anchor plate assemblies, consisting of 12 gage steel plate (with 1/4 inch-20 threaded holes extruded to give .200 inch minimum usable thread per hole) of length recommended by material manufacturer and 304 Series stainless steel machine screws 1-1/2 inch long, shall be provided for units located at stud wall construction.

5.19 Item BA-16; Wall Urn (Surface Mounted): Wall urn shall be 18-8 Type 304, 18 gage stainless steel, all welded construction. Flip-top ash tray shall be 18-8 Type 304, 22 gage stainless steel secured to wall urn by stainless steel piano hinge and with ABS push button. Inner ash receptacle shall be drawn one piece seamless aluminum construction, removable. Access door shall be equipped with concealed locking device. Urn shall be 11 inches wide by 4-1/8 inches high and 5-3/4 inches deep. Wall plate shall be 11 inches long by 5-5/8 inches high.

5.20 Item BA-17; Mop and Broom Holder (Surface Mounted): Mounting base shall be 18-8 Type 304, 22 gage stainless steel. Holders shall be spring loaded, rubber cam with plated steel retainer. Unit shall be 36 inches long, 5 inches high, and with 4 holders.

5.21 Item BA-18; Laminated Plastic Shelves: Finished dimensions of shelves shall be 1 inch thick, 12 inches deep, and 36 inches wide. All exposed surfaces shall be high pressure laminated plastic, 1/16 inch thick, matte finish. Color and pattern of plastic laminate shall be as indicated. All laminating shall be done with adhesives that prevent delaminating from moisture and heat. Shelves shall have three-ply 45 pound density resin impregnated particle core and shall have factory installed threaded steel inserts for attaching brackets with stainless steel machine screws. Each shelf shall have three brackets of 16 gage, type 304, stainless steel, with applicable fasteners.

5.22 Item BA-19; Pail or Ladder Hook: Hook and diagonal brace shall be 18-8 Type 304, 12 gage stainless steel with electropolished finish. A 90 degree 1/2 inch high retaining lip shall be formed on front of unit. Unit shall be 6 inches high and shall project from wall 8 inches.

5.23 Item BA-20; Vacuum Hose Holder: Unit shall be 18-8 Type 304, 18 gage stainless steel, one piece construction, with contoured corners. Unit shall be 6 inches long by 2-1/8 inches high.

5.24 Item BA-21; First Aid Cabinet (Surface Mounted): Door shall be 18-8 Type 304, 22 gage stainless steel, double pan back construction, warp resistant, a full length stainless steel piano hinge, and with tumbler lock. Cabinet shall be 18-8 Type 304 heavy gage stainless steel, welded construction. Mirror on door shall be No. 1 quality, 1/4 inch thick plate glass, electrolytically copper backed, polished edges, fully protected with padding and have a 15 year guarantee against silver spoilage. Mirror shall have "Red Cross" lettered on mirror. Cup dispenser shall have a capacity for 50 three ounce cups. Interior shelves, total of three (top two adjustable and bottom shelf fixed) shall be 18-8 Type 304, 22 gage stainless steel. Open shelf shall be located on bottom of unit. Units shall be 17-3/16 inches wide by 30-5/8 inches high by 4 inches deep. Door height shall be 18-1/8 inches.

5.25 Item BA-22; Corner Shower Seat: Shower seat shall be 18-8 Type 304, 16 gage stainless steel with 1 inch channel formed return edges, one piece construction, and with back corner cut on a 45 degree angle to insure a tight fit into the corner. Support angle shall be 18-8 Type 304, 1/8 inch by 3/4 inch by 3/4 inch extruded stainless steel right angle. Retaining clip shall be 18-8 Type 304, 22 gage stainless steel. Seat secured to wall with full length stainless steel hinge. Unit shall be 15-1/2 inches by 15-1/2 inches.

5.26 Item BA-23; Mirror, Stainless Steel: Frame shall be 18-8 Type 304, heavy gage stainless steel, 3/4 inch by 3/4 inch angle, one-piece, roll formed construction with continuous integral stiffener on all sides. Edge of angle shall have bevel design to hold frame tightly against mirror. Corners of mirror frame shall be heliarc welded, ground and polished smooth. Back shall be 20 gage galvanized steel fastened to frame with concealed screws and equipped with integral horizontal hanging brackets. Concealed vandal-proof locking screws shall securely fasten mirror to wall hanger. Mirror shall be

22 gage, Type 430 stainless steel with reflective highly polished strip finish. Mirror shall be protected on all edges by high impact plastic filler strip. Back of mirror shall be protected by waterproof, non-abrasive 3/8 inch thick polystyrene padding. Concealed wall hanger shall be 18 gage by 1 inch galvanized steel, welded construction to form rigid rectangle. Mirror size shall be 60 inches by 24 inches and overall size shall be 60-3/4 inches by 24-3/4 inches.

5.27 Item BA-24; Combination Mirror-Shelf, Stainless Steel: Frame shall be one-piece, stainless steel, 1/2 inch channel, with polished finish. Galvanized steel back shall have edges formed and have integral horizontal hanging brackets for mounting on concealed wall hanger. Concealed vandal-proof locking screws shall securely fasten mirror-shelf to wall hanger. Shelf shall be 18-8 Type 304, 22 gage stainless steel with 3/8 inch return edges on all four sides, front return edge hemmed, and shall be attached to mirror frame by concealed stainless steel brackets. Screws, rivets or fasteners on mirror frame or shelf shall not be permitted. Mirror shall be 22 gage, Type 430 stainless steel with reflective, highly polished strip finish. Mirror shall be protected on all edges by high impact plastic filler strips. Back of mirror shall be protected by waterproof, non-abrasive 3/8 inch thick polystyrene padding. Concealed wall hanger shall be 18 gage by 1 inch galvanized steel, welded construction to form rigid rectangle. Mirror size shall be 16 inches by 22 inches, overall size sahll be 16-1/4 inches by 22-1/4 inches, and shelf shall be 5 inches deep and full width long.

5.28 Item BA-25; Feminine Napkin Disposal (Recessed Mounted): Type II, Mounting R. Flange shall be 18-8 Type 304, 22 gage stainless steel, drawn, one-piece seamless construction. Door shall be 18-8 Type 304, 22 gage stainless steel, self-closing, equipped with a full length stainless steel piano hinge, and with international symbols on door. Cabinet and removable receptacle shall be 18-8 Type 304 heavy gage stainless steel, welded construction, and with recessed stainless steel finger grip for servicing receptacle. Unit shall be 10-3/4 inches wide, 15-3/16 inches high, and 4 inches deep.

5.29 Item BA-26; Combination Sanitary Napkin-Tampon Dispenser (Recessed): Type I, Class 5, Mounting R. Units shall be formed from stainless steel. Dispensers shall have a capacity of 15 napkins and 22 tampons. Dispensing mechanism shall be for coin (10 cents) operation. The dispensers shall be designed for vending any one of not less than nine different brands of napkins and tampons. Each coin box shall be equipped with tumbler lock and opens with different key than furnished for door. Coin demonination shall be changeable without installing new coin mechanism.

5.30 Item BA-27; Liquid Soap Dispenser (Surface Mounted): Valve shall be stainless steel and chrome plated brass, no packings or washers. Hood shall be stainless steel, locked filler top which requires special key; vandal proof. Container shall be transparent shatter-proof Lustrex, have 18 fluid ounce capacity, shall be completely encased in stainless steel (polished finish), and with visible soap level. Valve shall be of the push-in type with

hydroflex force pump action which is direct from liquid soap supply without suction. Valve shall be located above soap level. Provide concealed wall plate. Unit shall be 3-1/2 inches wide by 6 inches high by 6 inches deep.

5.31 Item BA-28; Liquid Soap Dispenser (Countertop Mounted): Piston and 4 inch spout shall be stainless steel secured by tamper proof guide screw recessed in a polished chrome plated brass body without packings or washers. Container shall be copper nickel finish steel globe, plated inside and out and shall have a capacity of 20 fluid ounces. Piston shall be of the press down type with force pump action direct from liquid soap supply without suction. Provide chrome plated brass spacer as required; spacer finish shall match dispenser. Unit shall be 11-3/4 inches high.

5.32 Item BA-29; Waste Receptacles (Recessed Mounted): Cabinet shall be 18-8 Type 304 heavy gage stainless steel, welded construction. Flange shall be 22 gage stainless steel, drawn, one piece seamless construction. Disposal door shall be 18-8 Type 304, 22 gage stainless steel, equipped with full length stainless steel, piano hinge, self-closing, and with international symbol. Cabinet door shall be 18-8 Type 304, 22 gage stainless steel, warp resistant, enclosed double pan construction, equipped with full length stainless steel piano hinge and shall have tumbler lock. Waste receptacle shall be furnished with removable, rigid molded plastic leakproof 10.5 gallon capacity, waste container. Unit shall be 12-3/16 inches wide, 47-1/8 inches high and 7-9/16 inches deep.

5.33 Item BA-30; Grab Bar (Horizontal Mounted): Type IV, Class 2, Form a. Stainless steel tube shall be 1-1/2 inch OD, with a wall thickness of not less than 18 gage. Flanges shall be 3/16 inch thick stainless steel plate, 3 inch diameter and each shall have 3 countersunk screw holes for attachment to wall. Ends of grab bars shall pass thru flanges and be heliarc welded to form one structural unit. Units shall have satin finish with peened gripping surface. Units shall be 24 inches long with 2 flanges, and dimension from wall to grab bar shall be 2-5/8 inches. One thru wall anchor assembly, consisting of zinc chromate bonderized, 3 inches by 4 inches by 10 gage steel plates, plated steel carriage bolt, connectors and spacers, shall be provided for each flange located at solid wall construction. Concealed stud wall anchor plate assemblies, consisting of 12 gage steel plate (with 1/4 inch-20 threaded holes extruded to give .200 inch minimum usable thread per hole) of length recommended by material manufacturer, and 300 Series stainless steel machine screws 1-1/2 inches long, shall be provided for units located at stud wall construction.

5.34 Item BA-31; Grab Bar (Horizontal Mounted): Same as specified in Paragraph entitled "Item BA-30; Grab Bar (Horizontal Mounted) except units shall be 18 inches long.

5.35 Item BA-32; Grab Bar (Two-Way Tub Bar): Type IV, Class 2, Form k, (left-hand and right-hand). Stainless steel tube shall be 1-1/2 inches OD, with a wall thickness of not less than 18 gage. Flanges shall be 3/16 inch thick stainless steel plate, 3 inch diameter, and each shall have 3

countersunk screw holes for attachment to wall. Ends of grab bars shall pass thru flanges and be heliarc welded to form one structural unit. Units shall have satin finish with peened gripping surface. Units shall be 53-1/4 inches by 29-1/4 inches by 32 inches, and dimension from wall to grab bar shall be 2-5/8 inches. Units shall have 4 flanges. One thru wall anchor assembly, consisting of zinc chromate bonderized 3 inches by 4 inches by 10 gage steel plates, plated steel carriage bolt, connectors, and spacers shall be provided for each flange located at solid wall construction. Concealed stud wall anchor plate assemblies, consisting of 12 gage steel plate (with 1/4 inch-20 threaded holes extruded to give .200 inch minimum usable thread per hole), of length recommended by material manufacturer and 300 Series stainless steel machine screws 1-1/2 inches long, shall be provided for units located at stud wall construction.

5.36 Item BA-33; Grab Bar (Tub End Double Support): Type IV, Class 2. Same as specified in Paragraph entitled "Item BA-32; (Two-Way Tub Bar)", except units shall be tub end double support type, 40 inches long, top support extends from wall 12 inches, bottom support extends from wall 8 inches, and distance from top to bottom support shall be 6 inches.

5.37 Item BA-34; Grab Bar (Side Bar With Outrigger): Type IV, Class 2, form k, (left-hand and right-hand). Stainless steel tube shall be 1-1/4 inches OD, with a wall thickness of not less than 18 gage. Flanges shall be 3/16 inch thick stainless steel plate, 3 inch diameter, and each shall have 3 countersunk screw holes for attachment to wall. Ends of grab bar shall pass thru flanges and be heliarc welded to form one structural unit. Units shall have satin finish with peened gripping surface. Units shall be 30 inches long, 24 inches high, with outrigger projecting 12 inches from wall and located 6 inches from main side bar. Units shall have 3 flanges. One thru wall anchor assembly, consisting of zinc chromate bonderized 3 inches by 4 inches by 10 gage steel plates, plated steel carriage bolt, connectors, and spacers, shall be provided for each flange located at solid wall construction. Concealed stud wall anchor plate assemblies, consisting of 12 gage steel plate (with 1/4 inch-20 threaded holes extruded to give .200 inch minimum usable thread per hole), of length recommended by material manufacturer, and 300 Series stainless steel machine screws 1-1/2 inches long, shall be provided for units located at stud wall construction.

5.38 Item BA-35; Toilet Seat Cover Dispenser (Surface Mounted): Type I, Class 2, Mounting S, Style L. Dispenser shall be fabricated from Type 304 stainless steel, surface mounted, for seat cover only, shall have a capacity of 250 seat covers, and shall be capable of dispensing single or half-fold paper toilet seat covers.

5.39 Item BA-36; Paper Towel Dispenser (Surface Mounted): Same as specified in Paragraph 5.9 entitled "Item BA-6; Paper Towel Dispenser (Surface Mounted).

5.40 Item BA-38; Tilt Mirror, Stainless Steel: Frame shall be 18-8 type 304, heavy gage stainless steel. Mirror corners shall be heliarc welded,

ground and polished smooth. Back shall be 20 gage galvanized steel with slots for mounting screws and integral screw head lock. Mirror shall be No. 1 quality, 1/4 inch thick by approximately 16 inches by 30 inches plate glass, electrolytically copper backed, polished edges, edges fully protected by high impact plastic filler strips. Back shall be protected by shock absorbing, waterproof, nonabrasive 1/8-inch thick polystyrene padding. Plate glass mirror shall be guaranteed 15 years against silver spoilage. Mirror shall project from wall 1 inch at bottom and 4 inches at top.

5.41 Item BA-39; Waste Receptacles (Recessed 4 Inch Wall): Cabinet shall be 18-8 Type 304 stainless steel throughout, welded construction. Flange shall be 22 gage stainless steel, drawn, one-piece, seamless construction. Waste container shall be 18-8 Type 304, 22 gage stainless steel. Top and bottom edge shall be hemmed for safe handling. Waste receptacle shall have a 12 gallon capacity, shall be secured to cabinet by tumbler lock, and provided with hooks for interior liner. Cabinet shall be 17-3/16 inches wide by 30-5/8 inches high by 4 inches deep. Waste receptacle shall be 15-3/16 inches wide by 23 inches high by 8 inches deep.

5.42 Item BA-40; Mirror, Stainless Steel: Frame shall be one piece, stainless steel 1/2 inch channel with polished finish. Mirror shall be 22 gage, Type 430 stainless steel with reflective, highly polished strip finish. Back of mirror shall be protected by waterproof, non-abrasive 3/8 inch thick polystyrene padding. Concealed wall hanger shall be 18 gage by 1 inch galvanized steel, welded construction to form rigid rectangle. Galvanized steel back shall have integral horizontal hanging brackets for mounting on concealed wall hanger. Concealed vandal-proof locking screws shall securely fasten mirror to wall hanger. Mirror size shall be 16 inches by 22 inches and overall size shall be 16-1/4 inches by 22-1/4 inches.

5.43 Item BA-41; Mirror; 36"W x 60"H: Frame shall be 18-8, Type 304 heavy gage stainless steel 3/4 inch by 3/4 inch angle. Frame shall be one-piece, roll-formed construction with continuous integral stiffener on all sides and beveled edge to hold frame tightly against mirror. Corners shall be heliarc welded, ground, and polished smooth. Galvanized steel back shall have integral horizontal hanging brackets for mounting on concealed rectangular wall hangers and secured with concealed vandal-proof screws in lower frame. Mirror shall be No. 1 quality 1/4-inch thick plate glass, electrolytically copper plated and guaranteed 15 years against silver spoilage. All edges of mirror shall be protected by high impact plastic filler strips. Mirror back shall be protected by shock-absorbing, waterproof, non-abrasive 1/4 inch thick polystyrene padding. Mirror size shall be 36 inches wide by 60 inches high.

5.44 Item LE-11; Dispenser, Reagent, Phenolic: Unit shall consist of a polypropelene reservoir, vinyl plastic tubing and an aspirator for connection to a sink faucet. A liquid chemical germicide shall be stored in the one gallon reservoir and be fed into the fresh water from the faucet by means of the tubing and aspirator. The shipping container shall serve as the reservoir. The pick probe assembly shall be stainless steel with strainer and check valve on bottom. The tubing shall be approximately 3/8 inches in

diameter. The aspirator shall allow a maximum mixture of approximately 5% and a minimum of 0%. Provide all anchors, brackets and other attachment devices for a complete and approved installation.

6. INSTALLATION: Surfaces of fastening devices exposed after installation shall have the same finish as the attached accessory. Exposed screw heads shall be oval. Installed location and height of accessories shall be approximately as indicated. Exposed surfaces of accessories shall be protected with stripable plastic or by other approved means until the installation is accepted. The accessory manufacturer's mounting details shall be coordinated with other trades as their work progresses.

6.1 Recessed Accessories: Accessories shall be fastened to a rough frame, blocking, or anchors set in mortar in masonry construction, to metal studs or framing with sheet metal screws in metal construction.

6.2 Surface-Mounted Accessories: Accessories except as indicated or specified otherwise, shall be installed with sheet metal screws or wood screws in metal or fiber shields or sleeves, or with toggle bolts, or other approved fasteners as required by the construction. Backplates shall be installed in the same manner or shall be provided with lugs or anchors set in mortar, as required by the construction.

---END---

15401. Plumbing
15402. Vacuum Cleaning Systems
15403. Nonflammable Medical Gas Systems
15404. Pneumatic Tube System
15407. Gas Piping
15514. Sprinkler Systems
15516. Fire Pumps
15601. Cast Iron Hot Water Boiler
15611. Fuel Oil Handling System
15631. Steam Boilers and Equipment (500,000 - 18,000,000 BTU/HR)
15652. Central Refrigeration Equipment for Air Conditioning
15654. Refrigeration Equipment for Refrigerated Storage Room
15711. Hot Water Heating and Chilled Water Cooling System
15721. Solar Domestic Hot Water Generating System
15723. Steam Distribution
15771. Split System Air Conditioning Systems
15802. Air Supply Systems
15907. Testing and Balancing Air and Water Systems
15911. Temperature and Humidity Controls

16. Electrical

SECTION

16011. General Requirements, Electrical
16113. Underfloor Duct System
16201. Emergency Power System
16300. Electrical Distribution, Exterior
16402. Interior Wiring Systems
16450. Grounding
16465. Transformers, Substations and Switchgear, Interior
16492. Electrical Systems for Critical Care and Inhalation Anesthetizing Locations
16510. Lighting, Interior
16530. Lighting, Exterior
16610. Lightning Protection System
16721. Manual and Automatic Fire Alarm Systems
16730. Sound System - Radio Entertainment
16740. Public Address Area Paging System
16760. Security System
16770. Broadband Communication System and Master Antenna Television System
16780. Dictating Conduit System
16790. Intercommunication System
16791. Telephone Cable Site Distribution System

SECTION 11181. PROJECTION SCREEN

1. APPLICABLE PUBLICATIONS: The following publications of the issues listed below, but referred to hereafter by basic designation only, form a part of this specification to the extent indicated by references thereto:

1.1 Underwriters' Laboratories, Inc. (UL):

Underwriters' Laboratories Requirements for Projection Screen Fabric.

2. QUALITY CONTROL: Approvals, except those required for field installation, field application and field tests, shall be obtained before delivery of materials to the project site.

3. SUBMITTALS:

3.1 Tests and Certificates: The testing requirements for materials incorporated in referenced documents will be waived provided the Contractor submits certificates from the manufacturer stating that materials furnished for this project conform to all requirements of this specification and the referenced documents. Copies of the test reports need not be submitted except as specifically requested by the Contracting Officer.

3.1.1 Sample Certificate: The certificate shall not contain statements that could be interpreted to imply that the product does not meet all requirements specified, such as "as good as"; "achieve the same end use and results as materials formulated in accordance with the referenced specification"; "equal or exceed the service and performance of the specified material". The certificate should simply state that the product conforms to all requirements specified.

SAMPLE CERTIFICATE

The manufacturer hereby certifies that all following products being furnished for this project conform to all requirements of the project specifications and the respective reference specifications:

MANUFACTURER AND PRODUCT	REFERENCE SPECIFICATION
John Doe Company Projection Screen Fabric	UL

SIGNATURE AND TITLE

3.2 Shop Drawings: Shop drawings shall be submitted and approved before delivery of materials to the site. Drawings shall show projection screen type, size, installation details, and anchoring.

3.3 Samples: One 12 inch by 12 inch sample of proposed projection screen fabric shall be submitted and approved before the materials are delivered to the site.

4. DELIVERY, STORAGE, AND PROTECTION: Materials shall be delivered to the site in the original sealed containers or packages, and shall bear the manufacturer's name and brand designation. Materials shall be stored and handled in a manner to protect them from damage during the entire construction period.

5. MATERIALS:

5.1 Projection Screens:

5.1.1 Case: Octagonal shaped heavy gage steel case with flat black design and baked enamel finish. Case shall be fitted with heavy duty chrome plated steel case end caps concealing roller ends with integral bearing surface or steel inner caps to support roller.

5.1.2 Brackets: Brackets shall be plated steel attached to end caps for wall mounting by means of slotted screw holes.

5.1.3 Screen Fabric: Screen fabric shall be listed by Underwriters' Laboratories, Inc. Screen fabric shall be flame retardant and mildew resistant fiberglass with glass beaded picture surface and with 2 inch black masking borders. Fabric shall be mounted on 1-3/4 inch rigid spring roller and permanently attached to roller by metal clips on fabric edge being forced into groove in roller. Clips shall be spaced every 4 inches along the fabric edge and double clips shall be used on the ends. Bottom of fabric shall be mounted into a metal strip in a tubular steel slat finished in baked enamel. Ends of slot shall be protected by plastic caps. Plated steel slot pull shall be attached to slat with screws.

6. INSTALLATION: Install projection screens in accordance with approved shop drawings and manufacturer's recommendations.

---END---

SECTION 11201. ECCLESIASTICAL CABINET

1. QUALITY CONTROL: Approvals, except those required for field installations, field applications and field tests, shall be obtained before custom fabrication is started and before delivery of materials to the project site.

2. SUBMITTALS:

2.1 Certificates: The Contractor shall submit certificates from the manufacturer stating that materials furnished for this project conform to all requirements of this specification.

2.1.1 Sample Certificate: The certificate shall not contain statements that could be interpreted to imply that the product does not meet all requirements specified, such as "as good as"; "achieve the same end use and results as materials formulated in accordance with the referenced specification"; "equal or exceed the service and performance of the specified material". The certificate should simply state that the product conforms to all requirements specified.

SAMPLE CERTIFICATE

The manufacturer hereby certifies that the following product being furnished for this project conforms to all requirements of the project specifications.

MANUFACTURER AND PRODUCT

John Doe Company
Ecclesiastical Cabinet

SIGNATURE AND TITLE

2.2 Shop Drawings: Shop Drawings shall be submitted and approved before delivery of materials to the site. Shop drawings shall show type, size, installation, and anchoring details.

2.3 Manufacturer's Installation Procedures: Manufacturer's currently recommended installation procedures shall be submitted and approved. Installation procedures shall accompany shop drawings.

3. DELIVERY, STORAGE, AND PROTECTION: Materials shall be delivered to the site in the original sealed containers or packages and shall bear the manufacturer's name and brand designation. Materials shall be stored and handled in a manner to protect them from damage during the entire construction period.

4. MATERIALS:

4.1 Ecclesiastical Cabinet (Tabernacle): Prefabricated, recessed, single door, style 97, tab 60 ecclesiastical cabinet. Unit shall have steel housing with bronze frame. Bronze frame shall be 14 inches high by 12 inches wide; door opening shall be 11-1/2 inches high by 8-1/2 inches wide; and steel housing shall be 12-1/8 inches high by 10-1/2 inches wide by 10 inches deep. Door inlays shall be hand painted with color enamels, and interior shall have white silk lining. Cabinet shall be provided with cabinet lock. Provide all attachment devices required for installation.

5. INSTALLATION: Cabinet shall be installed in accordance with approved shop drawings and manufacturer's recommendations. After installation, protect surfaces from damage. If damages occur repair damage to meet the approval of the Contracting Officer or provide new cabinet at no additional cost to the Government.

---END---

SECTION 11400. FOOD SERVICE EQUIPMENT

1. APPLICABLE PUBLICATIONS: The following publications of the issues listed below, but referred to thereafter by basic designation only, form a part of this specification to the extent indicated by the references thereto:

1.1 Federal Specifications:

S-C-1474	Cooker, Steam, Vegetable (Speed).
S-F-695F & Am 1	Fryers, Deep-Fat (Electric).
FF-C-77B	Caster, Institutional Duty.
OO-D-1390 & Int Am 1	Dishwashing Machines, Double Tank, Commercial (Rack, Conveyor).
OO-M-38H & Int Am 3 (GL)	Mixing Machines, Food, Electric (Vertical, Commercial Type, Bakery and Kitchens).
QQ-B-654	Brazing Alloy, Silver.
RR-K-195G	Kettles, Steam-Jacketed, (Stainless Steel, Steam Heated).
WW-P-541/5A	Plumbing Fixtures (Sinks, Kitchen and Service and Laundry Tub, Land Use) (Detail Specifications).
WW-T-799E	Tube, Copper, Seamless, Water and Refrigeration (For Use with Solder-flared or Compression-type Fittings).

1.2 Military Specifications:

MIL-G-2338J & Am 2	Griddles, Self-Heating, Electric; and Stands, Griddle.
MIL-R-11295 & Am 1	Ranges, Electric, Commercial (With or Without Broiler). Change "MIL-R-11295 & Am 1" to "MIL-R-11295H & Am 2".
MIL-S-19114B	Sinks, Scullery: and Drainboard, Sink, Attachable.
MIL-P-23694C & Int Am 1	Pans, Frying and Braising, Electric, Tilting-Type.
MIL-I-24172 & Am 1	Insulation, Plastic, Cellular Polyurethane, Rigid, Preformed and Foam In Place.
MIL-S-40144D	Shelving, Storage, Food.
MIL-D-43300D & Am 1	Cold Food Counters, Mechanically Refrigerated.
MIL-C-43427A & Am 3	Cabinets, Food Service, Warmer-Refrigerator, Roll-Thru, Roll-In.
MIL-O-43633B & Am 2	Ovens, Baking and Roasting, Forced Convection, Electric.
MIL-I-43682B & Am 3	Icemaker-Dispenser; w/Water Dispenser Attachment.
MIL-I-43705C	Ice Cream Makers; Shake Makers; and Combination Ice Cream and Shake Makers-Soft Serve.
MIL-D-43715 & Int Am 1	Dispenser, Hot Chocolate.
MIL-D-43738A & Am 2	Dispenser, Carbonated Beverage, Mechanically Refrigerated.

MIL-R-43814	Rack, Mobile, Bakery Products and Meat, with Shelves.
MIL-D-43845	Dispenser, Iced Tea.
MIL-T-82049A & Am 1	Tables, Hot Food, Electric, Mobile.

1.3 American National Standards Institute (ANSI) Publications:

A108.6-1976	Installation of Ceramic Tile with Chemical Resistant, Water Cleanable Tile-Setting and-Grouting Epoxy.
A118.3-1976	Chemical Resistant, Water Cleanable Tile-Setting and-Grouting Epoxy.
B16.15-71	Cast Bronze Threaded Fittings, 150 and 250 lb.
B16.18-72	Cast Bronze Solder Joint Pressure Fittings.
B16.22-73	Wrought Copper and Bronze Solder-Joint Pressure Fittings.
B16.26-75	Cast Bronze Fittings for Flared Copper Tubes.

1.4 American Society for Testing and Materials (ASTM) Publications:

A36-75	Structural Steel.
A123-73	Zinc Hot-Galvanized Coatings on Products Fabricated from Rolled, Pressed, and Forged Steel Shapes, Plates, Bars and Strip.
A167-74	Stainless and Heat Resisting Chromium-Nickel Steel Plate, Sheet and Strip.
A270-75	Seamless and Welded Austenitic Stainless Steel Sanitary Tubing.
A276-76	Stainless and Heat-Resisting Steel Bars and Shapes.
A525-76	Steel Sheet, Zinc Coated (Galvanized) by the Hot Dip Process, General Requirements.
B43-76	Seamless Red Brass Pipe, Standard Sizes.
C94-74a	Ready-Mixed Concrete.

1.5 American Wood Preservers' Bureau (AWPB) Publications:

LP2-71	Softwood Lumber, Timber and Plywood; Pressure Treated With Waterborne Preservative for Aboveground Use.

1.6 International Association of Plumbing and Mechanical Officials (IAPMO) Publications:

Uniform Plumbing Code (1976 Edition).

1.7 National Electric Manufacturers Association (NEMA) Publications:

ICS-76	Industrial Controls and Systems.

1.8 National Fire Protection Association (NFPA) Publications:

96-76	Installation of Equipment for the Removal of Smoke and Grease Laden Vapors from Commercial Cooking Equipment.

1.9 National Sanitation Foundation (NSF) Publications:

2-73	Food Service Equipment.
4-73	Commercial Cooking and Warming Equipment.
7-71	Food Service Refrigerators and Storage Freezers.
C-2-72	Special Equipment and/or Devices.

1.10 Tile Council of America (TCA):

137.1-76	Recommended Standard Specification for Ceramic Tile.

1.11 Underwriters' Laboratories, Inc. (UL) Publications:

57-77	Electric Lighting Fixtures.
197-76	Commercial Electric Cooking Appliances.
430-77	Waste Disposers.

2. SUBMITTALS:

2.1 Materials and Equipment Lists: Within 360 days after the date of notice to proceed, and before starting installation of any materials or equipment, a complete list of materials and equipment to be furnished shall be submitted to and approved by the Contracting Officer. This list shall include catalog numbers, the corresponding item numbers used in this specification, catalog cuts, data sheets, and such other descriptive information as may be required. No consideration will be given to partial lists submitted from time to time. Data sheets shall be certified to comply with the appropriate referenced specifications.

2.2 Shop Drawings: After receiving approval of the equipment on the materials and equipment list and before delivery of any of these items to the site, such drawings as may be required, including those described hereinafter shall be submitted to and approved by the Contracting Officer.

2.2.1 Food Service Equipment layout drawings showing each item in its exact location shall be prepared to a minimum quarter-inch scale. Equipment items shall be numbered to coincide with the symbol numbers used in this specification to identify the equipment.

2.2.2 Roughing-in plan of a minimum quarter-inch scale shall show the exact locations of all plumbing, gas, steam, and electric conduit penetrations in the concrete floor and walls. Allow clearance for all connecting piping, valves, switches, relays, and other accessories required for the operation of the equipment.

2.2.3 Depression drawing of a minimum half-inch scale shall show all floor depression details and dimensions.

2.2.4 Shop Fabricated Items: Drawings of all shop fabricated items shall be prepared showing plan view, front, rear, and side elevations and shall be of a minimum half-inch scale, shall show materials and methods of construction.

2.3 Samples: Before delivery of materials or equipment to the site, samples of the following items shall be submitted to and approved by the Contracting Officer: stainless steel gusset, leg and adjustable foot for sinks; a 12-inch by 12-inch sample of 12-gauge stainless steel with a welded center hairline joint showing the type of field joint proposed for use on counters, tables, and sinks; a coved corner section of sink drainboard and stainless steel table corner; a ball bearing stainless steel drawer slide; and a two-inch chromium-plated, lever-action waste valve with a connected overflow.

2.4 Instructions and Manuals: The Contractor shall furnish to the Contracting Officer six sets of such operation and maintenance instructions and manuals as are normally supplied by the equipment manufacturers.

2.4.1 Operating and routine maintenance instructions for operating personnel shall be furnished for dishwashing machines, vent hoods, steam cookers and all such items requiring detailed instructions. These instructions shall be framed under durable plastic sheets suitable for wall mounting and shall contain but not be limited to the following: the function of each of the principal components; instructions for start-up and shut-down; economical operation; procedure to follow in the event of equipment failure; and instructions on normal maintenance.

2.5 Certificates of Conformance or Compliance: Before delivery of materials and components, certificates, in triplicate, attesting that materials and components meet the requirements specified shall be submitted to and approved by the Contracting Officer.

2.6 Certified Laboratory Test Reports: Test requirements for materials and components as stated herein (except field tests) or incorporated in referenced documents may be waived, provided certified copies of test reports from approved laboratories are submitted and approved as specified above. Test reports shall be accompanied by certificates from the manufacturer certifying that the previously tested material or component was the same type, quality and manufacture as that proposed for this project. Testing laboratories shall be approved by the Contracting Officer.

3. LOGISTICAL RESPONSIBILITY: Equipment is scheduled on the drawings with logistic responsibility designated by a letter code to be interpreted as follows:

3.1 Category "A" Equipment: This equipment shall be Contractor furnished, Contractor installed. Provide this equipment in the quantity and locations indicated on the drawings.

3.2 Category "C" Equipment: This equipment shall be Government furnished, Government installed.

3.3 Category "E1" Equipment: This equipment shall be Government furnished, Government installed.

4. DELIVERY, STORAGE AND HANDLING: Follow manufacturer's recommendations to protect materials and equipment and prevent damage during delivery, storage and handling. Replace damaged or defective items at no cost to the Government.

5. MATERIALS: Except where materials are specified in referenced publications covering individual equipment items, materials shall conform to the specifications, standards and other requirements listed below.

5.1 Aluminum: 0.042 inch mill finish.

5.2 Brass-piping: ASTM B43.

5.3 Concrete: 4000 P.S.I. mix at twenty-eight days; ASTM C94, ready-mixed, maximum one inch aggregate. Concrete and reinforcement shall conform to section entitled "Cast In Place Concrete".

5.4 Copper-Tubing: Federal Specification WW-T-799, type L.

5.5 Cutting Boards: Rich-Lite or approved equal phenolic wood fiber laminate, one inch thick.

5.6 Feet: Solid stainless steel, closed bottom, adjustable within one inch by concealed threaded stem with lug to fit inside leg.

5.7 Gaskets: Neoprene, solid or hollow, smooth surfaced, removable.

5.8 Sealant: Single component silicone, elastomeric, mildew resistant.

5.9 Stainless Steel:

5.9.1 Sheets: ASTM A167, Type 304, 18% chromium - 8% nickel - 12% carbon maximum. Finish where exposed - No. 4; where not exposed - No. 2B. Gauge specified is U.S. Standard Gage.

5.9.2 Tubing: ASTM A270, Type 304, No. 4 finish.

5.9.3 Legs: 1-5/8 inch O.D. 16 gauge.

5.9.4 Crossbracing: One inch O.D., 16 gauge.

5.9.5 Fastenings: Type 304.

5.10 Zinc Coated Steel:

5.10.1 Sheets: ASTM A525, Coating class G90.

5.10.2 Shapes: ASTM A36, zinc coated in accordance with ASTM A123.

5.11 Condensing Unit: Complete self-contained units having compressor, condenser motor and auxiliary equipment on a single rigid base. Each unit shall be automatically controlled by a suction pressure switch and high pressure cut-out.

5.11.1 Equipment shall be designed for direct expansion, employing thermostatic expansion valves and rated in accordance with "ASHRAE" standards. Hermetically sealed units must be serviceable in the field.

5.11.2 Water Cooled: Capacity to absorb required load using incoming water of 85° F. and maximum temperature rise of 20° F. with condensing temperature of 105° F.

5.12 Drain Lines: Copper, minimum one inch inside diameter with cast brass or wrought copper recessed solder fittings, chrome plated or covered with 18 gauge stainless steel enclosure chase where exposed.

5.13 Expansion Valves: Thermostatic type.

5.14 Faucets: Fed. Spec. WW-P-541/5 modified as follows: Faucet bodies, spouts and strainers shall be cast or wrought copper alloy. Internal parts of faucets shall be copper alloy, series 200 or 300 stainless steel or nickel copper alloy. Handles and escutcheons shall be series 200 or 300 stainless steel or copper alloy. Finish on exposed surfaces shall be satin chromium plated for copper alloys, or No. 4 for stainless steel. Faucets shall have replaceable seats or a replaceable cartridge containing all parts subject to wear. Unless otherwise specified or indicated, faucets shall be splashback mounted type with 8 inch long swivel spout and 1/2 inch internal pipe thread union inlets 8 inches center-to-center.

5.15 Hangers: Crane Co. or approved equal.

5.15.1 For Covered Pipes: Zinc coated steel.

5.15.2 For Copper Lines: Copper.

5.16 Line Covering: For suction lines and cold water lines for cooling water, 1/2 inch foamed elastomer closed-cell preformed pipe insulation.

5.17 Pressure Gauges: Rustproof case and dial, with bronze bourdon tube, minimum 2-1/2 inch diameter face.

5.18 Refrigerant Dryer: Throwaway type liquid line dryer.

5.19 Refrigerant Fittings: Wrought copper recessed solder fittings.

5.20 Refrigerant Heat Exchangers: Integral with unit cooler wherever possible.

5.21 Refrigerant Piping: Type L "ACR" nitrogen charged copper tubing.

5.22 Refrigerant Shut-off Valves: Packless valves of special pattern to suit the conditions of service. Especially designed for freon with port areas equal to pipe area.

5.23 Shut-off Valves: Brass, chrome plated with loose key or slotted for screwdriver blade.

5.24 Silver Solder: Federal Specification QQ-B-654, Grade III.

5.25 Thermometer: Chrome plated with minimum 4-1/2 inch diameter dial and scale reading of minus 60° F. to plus 100° F.

5.26 Unit Coolers: Disc fan type with finned copper coils, fully enclosed motors, fan guards and noncorrosive drain pan and housing.

5.27 Wastes: Fed. Spec. WW-P-541/5, quick opening lever operated type, constructed of cast or wrought copper alloy or stainless steel, wrought copper drains shall have nickel or chrome plated finish.

5.28 Water Piping: Type "L" copper, minimum 1/2 inch I.D. with cast brass or wrought copper recessed solder fittings, chrome plated or covered with 18 gauge stainless steel enclosure chase where exposed.

5.29 Circuit Breakers: Molded plastic type, A.C. - D.C. rated, 1, 2, or 3 poles as required, quick-make - quick-break, with trip-free operation handle, position indication, and thermalmagnetic trip device suitably rated for the device controlled. Breakers shall be suitably mounted, singly or grouped as required, recessed or concealed behind equipment doors. Switches to face out of equipment.

5.30 Conduit: Hot dipped galvanized rigid steel, 3/4" minimum size. Connections to motors or equipment subject to vibration shall be made by short length, twelve - eighteen inch, of liquid-tight, flexible steel conduit. Fittings shall be malleable or cast iron threaded type, cadmium plated or hot dipped galvanized, equipped with metal or composition covers and gasketed where exposed to moist conditions. Conduit and fittings shall be chrome plated or covered with 18 gauge stainless steel enclosure where exposed.

5.31 Cords: Three or four wire, type "S", with one leg grounded to equipment. All equipment not indicated to be direct connected shall be provided with appropriate 6 feet - 0 inch cord and cap assembly.

5.32 Disconnects: Type "S" nonfusible single throw, heavy duty industrial quick-make - quick-break, interlocked cover control, horsepower and A.C. voltage as required.

5.33 Junction Boxes: Hot dip galvanized sheet metal, one piece construction. where exposed to moisture or in refrigerators provide vapor-tight gasketed unit.

5.34 Motors: Totally enclosed, continuous duty, having thrust type ball bearing to allow operation in vertical position. Motor to have an overload device to protect motor from reaching temperature over 55° above 40° C. High torque, low starting current characteristic, with NEMA frames.

5.35 Motor Starters: For 120 volt, single phase: motors shall be manual tumbler type, having terminal overload protection, with interchangeable heater elements. For higher voltage, multiphase, and remote: starters shall be A.C. magnetic type, minimum size 1, combination type with fusible disconnect, control transformer all in one cabinet, with thermal overload relays. Enclosure shall be General Purpose NEMA Type 1; or at wet locations: NEMA Type 4 watertight, A.C. voltage and number of poles as required. Starters shall have an overload reset. Motors automatically controlled other than remote refrigeration units shall be provided with an "On-Off-Automatic" selector switch in cover and motors manually controlled shall be provided with a "Start-Stop" button in cover. Motor starters for remote refrigeration units shall be actuated by suction pressure switches, and shall have interlocks that will stop the compressor motors should the condensing water pressure fail.

6. FABRICATION: All flat metal work items, such as food service units, tables, sinks, counters, etc., described in the specifications, must be manufactured by a food service equipment fabricator who has the plant personnel and engineering facilities to properly design, detail and manufacture high quality food service equipment. The manufacturer shall be subject to the approval of the Government. All of the above work shall be of new, commercially perfect materials of standard unit assembly and manufactured by one manufacturer with uniform design, material and finish.

7. GENERAL REQUIREMENTS FOR EQUIPMENT: Where equipment is specified by reference to Federal or Military Specifications, the following exceptions apply to requirements therein:

a. Preproduction samples are not required.

b. Except as specifically required herein, testing is not required.

c. The preservation and packing requirements shall be the manufacturer's standard method.

d. Instructions and manuals shall be as specified in paragraph "Submittals" herein.

e. Electrical service characteristics shall be as shown on the drawings.

f. Electromagnetic compatibility is not required.

g. Fungus treatment of electrical components is not required.

h. Requirements for Navy shipboard use do not apply.

7.1 Products: Materials and equipment shall be essentially the cataloged products and manufacturers regularly engaged in production of such materials or equipment and shall be manufacturer's latest design that complies with the specification requirements. Where two or more units of the same type of equipment are required, these units shall be products of a single manufacturer. Each major component of equipment shall have manufacturer's name, address, and model and serial number on a nameplate securely affixed in a conspicuous place; nameplate of the distributing agent will not be acceptable.

7.2 Safety Requirements: Belts, pulleys, chains, gears, couplings, projecting setscrews, keys, and other rotating parts located so that any person can come in close proximity thereto shall be fully enclosed or properly guarded. High-temperature equipment and piping so located as to endanger personnel or create a fire hazard shall be properly guarded or covered with insulation.

7.3 Electrical Requirements: The electrical components, such as motors, motor starters, control pushbutton stations, float and pressure switches, solenoid valves, electrical disconnecting means, and other devices functioning to control the associated equipment shall be furnished as a part of the equipment. 480-volt magnetic starters, and pushbutton control stations shall be provided at all 480 volt motors. All motors shall be continuous duty, splashproof construction, squirrel cage induction type with ball bearings. All motors, heating elements, controls and other electrical devices located on the equipment shall be factory wired with wiring extended to a single electrical connection point. Where controls or other electrical devices are located remote from the equipment, all conduit and wiring shall be as specified in Division 16.

7.4 Plumbing Requirements: Accessories peculiar to proper functioning of the equipment such as faucets, control valves, sink strainers, valve type waste outlets, vacuum breakers, pressure reducing valves, pressure and temperature relief valves, and steam traps shall be provided with the equipment. Steam pressures and water pressures are shown on the drawings.

7.4 Plumbing Requirements: In the fourth sentence change "IAPMO "Uniform Plumbing Code" to "Standard Plumbing Code".

Equipment requiring a reduced pressure shall be provided with the proper pressure reducing valve. All water supplies to fixtures and equipment shall be protected against back siphonage in accordance with the IAPMO "Uniform Plumbing Code". Equipment that requires indirect drains shall be equipped with drain outlets and piping or tubing of sufficient length to extend to and empty into floor sink located closest to the equipment. Piping or tubing exposed to view shall be chrome plated or nickel plated brass or stainless steel. Concealed piping shall be type L copper tubing. Rough-in connections of hot and cold water, drain lines, steam and gas to equipment and valves, traps, water hammer arrestors and other items not specified to be furnished with the equipment are specified in Division 15.

8. EXHAUST HOODS:

8.1 This specification is based on auxiliary air make-up, high velocity centrifugal grease extracting type with a throat opening above and adjacent to the cooking equipment and shall effectively remove grease, smoke, fumes, vapors, odors, lint, dust and heat immediately as they leave the cooking equipment. The ventilator shall have specially designed centrifugal extracting baffles within the grease extracting chamber, immediately above and adjacent to the throat opening. Utilizing centrifugal force, and without the use of filters or other removable extracting devices, the grease, dust and other contaminates shall be extracted. The extracting efficiency and air volume shall remain constant, regardless of the grease loading factor, with an air flow of 250 cfm per lineal foot of throat opening.

8.2 Within the extraction chamber there shall be pipes equipped with directed spray nozzles through which hot water and detergent shall be released. The hot water and detergent shall effectively remove the grease and foreign substances and flush them into a slopped grease collecting gutter, connected to the building waste system. The control station shall start and stop the blower by means of a pre-set adjustable time delay relay; each time the "Stop" button is pushed, hot water and detergent shall be released into the grease extraction chamber. The hot water and detergent shall be released for the length of time previously set on the adjustable time delay relay. At the end of the pre-set time the hot water and detergent shall automatically shut off. This insures daily cleaning, for each time the ventilator is shut off it is automatically cleaned. The system shall have a normal open (close upon condition of run) contact, isolated, for interconnection into the central building, automating system to control of the ventilation equipment.

8.3 If the temperature of the air passing through the ventilator transition into the ductwork reaches excessive and dangerous proportions, a pre-set and sealed normally open thermostat shall be activated and electrically energize the damper switch.

8.4 Energizing the damper switch shall release a spring loaded fire damper sealng the throat of the ventilator, and release a water spray into the grease extraction chamber. The fire quenching water shall continue to be released as long as temperatures remain above danger level. As the

temperature cools, the water spray shall automatically shut off. A normally open remote fire push button switch shall be installed where shown on drawings. When pushed, it shall cause the same action as the thermostat. An isolated contact shall be provided for interconnection into the building alarm system to transmit condition of alarm.

8.5 The service cabinets shall have a hinged access door and shall contain line strainer, solenoid valve, vacuum breaker, detergent injector and space for detergent tank.

8.6 All hot water and drain lines within the ventilator shall be interconnected and tested at the factory and left for field connection. Hot water supply shall be 140 degrees F., at 40 P.S.I.

8.7 All wiring within the ventilator shall be installed at the factory. Connecting wiring shall be run from control station to the blower starter. Furnish remote fire switch.

8.8 Ventilators shall be equipped with vapor tight recessed fluorescent lights with hinged access. Lights shall have ribbed lense, with ribbed side up for ease of cleaning. Lights shall be U.L. approved, 200 watt, and shall be inter-wired within the ventilators.

8.9 Ventilators shall be constructed of not less than 18 gauge stainless steel. All joints and seams shall be welded, grease and water tight, with all exposed welds ground and polished.

8.10 All wiring and piping within the ventilators and service cabinet to be installed and tested at the factory. After ventilators are installed, they shall be checked and tested by factory authorized personnel, and a copy of the report submitted to the Contractor for submission to the Contracting Officer.

9. SURFACE FIRE PROTECTION:

9.1 Ventilator units shall have specially designed pre-engineered liquid chemical fire protection system complete with reset relay and remote manual release. The system shall operate independently of the Ventilator Automatic Fire Protection System. System shall be either Underwriters' Laboratories listed or Factory Mutual approved and shall comply with NFPA No. 96.

9.2 Ventilator shall be provided with an engineered surface protection system for ranges, fryers, griddles and braising pan. Release mechanism, tank fusible links, cables, nozzles, reset relay and other components shall be furnished to make a complete system. The entire system shall be built as part of the ventilator and the yoke assembly and supply line concealed in the ventilator. Exposed piping shall be stainless steel with chrome plated fittings.

9.3 The system shall be activated by fusible links and remote pull station connected to the release mechanism by cable and pulleys. Release mechanism shall have a microswitch connected to the reset relay. Reset relay and microswitch to be interwired at the factory. Provide two form "C" type contacts for each system. One contact shall be connected in parallel with the fire alarm initiating circuit and the other contact shall be connected to the Field Interface Device (FID) terminal cabinet specified in Division 13.

9.4 All protected electric cooking equipment shall be provided with contactor and interwired with fire protection system.

9.5 Complete engineering drawings including piping and wiring diagrams shall be submitted to the Contracting Officer for approval before installation of the system in the ventilator. After installation, the engineered surface protection system shall be completely tested by using compressed air or nitrogen instead of liquid chemical and certified by authorized personnel of the system's manufacturer and LANTDIV Fire Protection Engineer.

10. REFRIGERATED ROOMS (PREFABRICATED PANEL TYPE):

10.1 General Requirements: The work includes providing new refrigerated rooms of the prefabricated panel type. Each refrigerated room shall be complete and ready for operation. Construction shall be in accordance with the NSF publications. All interior wall and ceiling junctions shall have smooth, 0.5 inch radius corners.

10.2 Refrigerated Rooms shall be metal clad, interlocking, factory prefabricated, insulated sectional type and shall be installed in accordance with the approved recommendations of the manufacturer. The installation shall be accomplished by workmen skilled in this type of work. The construction shall utilize an integral locking device to allow each refrigerated room to be erected without special tools. Maximum width of each section shall be 4 feet and interior height of room shall be 9 feet - 6 inches.

10.2.1 Finish: Exterior and interior metal panels for prefabricated rooms, including doors shall be fabricated of sheet metal having a minimum U.S. gage thickness as specified. The panels shall be constructed of: Embossed Patterned Aluminum, 0.042 inch thick.

10.2.2 Insulation: Doors and panels shall be insulated with rigid preformed or foamed-in-place urethane conforming to MIL-I-24172, having a thermal conductivity factor (K) of not more than 0.14 BTU per hour per square foot per inch thickness per degree Fahrenheit. Overall door and panel thickness shall be a minimum of 4 inches. Approved type moisture-vapor sealing shall be provided for all panels and doors.

10.2.3 Joint Fasteners: The prefabricated panel sections shall be fastened with an eccentric or bolt type fastener, operated by a tool from the

interior, or other approved type fastener. The tool access openings shall be properly capped. Joints shall be sealed-in factory installed refrigerator gaskets compressed by fasteners.

10.3 Lumber: Wood members shall be kiln dried to a moisture content of from 10 percent to 15 percent at time of fabrication and shall be free of honey comb, decay, warp, checks, shakes or other defects which might affect the strength or durability. All wood used in the construction of walk-in refrigerators including doors and floor racks shall be pressure treated with one of the following water-borne preservatives in accordance with AWPB Standard LP-2: Ammoniacal Copper Arsenate, Chromated Copper Arsenate, Chromated Zinc Arsenate, Copperized Chromated Zinc Arsenate.

10.4 Interior Lighting: Each refrigerated room shall be equipped with minimum of one vapor tight, 150 watt, incandescent luminaire, ceiling - or wall-mounted, and wired to exterior switch equipped with pilot light at each exterior door to refrigerated room. Interior lighting shall conform to and shall have all electrical connections provided in accordance with Division 16.

10.5 Doors: Doors shall be provided factory-installed in prefabricated panel sections. Minimum clear opening shall be 34 inches wide by 76 inches high. Door shall be fabricated of same type of metal panels and insulation as specified hereinbefore for refrigerated rooms.

10.5.1 Hardware: Hardware shall be nonferrous metal of rigid heavy-duty type. Latches shall be suitable for locking with padlock on exterior and equipped with inside safety release mechanism to permit door to be opened from inside even when door is padlocked. Hinges shall be oblique or cam-lift type that automatically raise the door as it opens. Hinges shall be of the nylon or ball bearing type with stainless steel pins.

10.5.2 Frost Prevention Heater Wires: Frost prevention heater wires shall be provided for doors to spaces below 35 degrees Fahrenheit and shall be concealed around the perimeter of doors or door frame to prevent condensate and frost formation. Heaters shall operate on 120 volt, single phase, 60 Hertz, alternating current. All corrosion resisting steel cover plates, junction boxes mounted near end of overhead tracks, and all wiring and other items for doors up to junction boxes, shall be provided.

10.5.3 Doors for Refrigerated Rooms with Quarry Tile Flooring: Doors shall be designed to allow for the quarry tile flooring.

10.6 Panels: Panels on perimeter walls not adjacent building walls shall extend to 6 inches above finish kitchen area ceiling. These panels shall be 3/4 inch plywood finished with embossed pattern aluminum with stainless steel angle trim at ceiling.

10.7 Components: Walk-in refrigerator components such as lights, heaters and alarm systems shall be terminated in junction boxes above ceiling panels. Run wiring in metallic conduit.

10.8 Outlets: Furnish and install receptacle outlets in refrigerator wall wired complete to a junction box ready for connection to building service. Outlets shall be set in code-type boxes with stainless steel face plate.

10.9 Furnish vapor-proof lights and bull's-eye indicating "On" and "Off" switches for each walk-in refrigerator. All wiring shall be carried in metallic conduit run unexposed and extended to a junction box on top of refrigerator ready for connection to building service.

10.10 Refrigerator doors shall be infitting type and be constructed of wood perimeter framing, with plywood front and back panels. Insulate with 4 inches of urethane and cover completely with embossed patterned aluminum, same as walls and ceiling panels. Thoroughly brace and tie together. Provide with hinges, latch and lock. Contractor shall wire heater strips to terminal box ready for final connection to building service. Fit door with jamb and head gaskets. Doors shall be fitted with neoprene rubber sill sweeps.

10.11 Provide each walk-in refrigerated compartment with an alarm system with contacts for interwiring to master control station and auxiliary contacts for remoting a high temperature alarm to the Energy Monitoring and Control System (EMCS). Each alarm shall consist of a thermostat, green light indicating normal operation and a red light and alarm bell to be activated when the temperature in compartment rises 10 degrees F. above the compartments set temperature. Alarm shall be provided with a time delay to prevent actuation of the alarm during defrost cycles. Lights shall be recessed in a stainless steel enclosure and each set identified with etched plastic identification plates.

10.12 Refrigerators shall be set into depressed floor area and be arranged so that the finish of the refrigerator floor will be 1/2 inch higher than the adjacent area.

10.12.1 Level the depressed rough slab of the building with 1/2 inch concrete. When thoroughly dry, mop on a heavy layer of mastic adhesive and on this mastic adhesive provide a four mil thick polyethylene vapor barrier, another layer of mastic adhesive, and then the first layer of 2 inch thick insulation. The next layer of 2 inch thick insulation shall also be laid in mastic adhesive. The two courses shall run in opposite directions and all joints shall be broken by one-half. Insulation, shown on drawings as (Insul 8), shall conform to MIL-I-24172, Type I, Class 1.

10.12.2 On the top layer of insulation, mop on with mastic adhesive two courses of polyethylene. Lap not less than 12 inches and turn up all edges 6 inches against walls. Thoroughly waterproof with mastic adhesive, leaving ready for reinforced concrete and quarry tile flooring. Install reinforced concrete floor in accordance with paragraph entitled "Concrete".

10.13 Quarry Tile Flooring and Base:

10.13.1 Quarry tile floor shall be Standard Grade, 6 inch by 6 inch by 1/12 inch thick, slip resistant type, conforming to TCA 137.1, except water absorption shall not exceed 2 percent. Cove base, (6 inch by 5 inch by 1/2 inch) shall have rounded internal and external corners with 1/2 inch minimum radius. Color as indicated. Exposed surfaces of quarry tile and base shall have an opaque, white, specially compounded wax applied on exposed portions of type recommended by epoxy grout manufacturer.

10.13.2 Epoxy Setting Bed Mortar and Grout: ANSI A118.3, color as indicated.

10.13.3 Expansion and Control Joint Materials: Same as specified under section entitled "Acid-Resisting Quarry Tile Floors", paragraph entitled "Expansion and Control Joint Materials".

10.13.4 Installation: Install quarry tile and flooring in accordance with ANSI A108.6, except provide 100% coverage. Prepare substrate in accordance with epoxy setting bed mortar and grout manufacturer's recommendations. Setting bed of epoxy mortar shall be a minimum of 1/8 inch thick. Lay tile with 1/2 inch wide joints and completely fill joints with epoxy grout; tool joints flush with top of tile. Pitch floors to door openings. Locate and install expansion joints in accordance with section entitled "Acid-Resisting Quarry Tile Floors". Clean floor and base in accordance with grout manufacturer's recommendations. After cleaning, wipe tile with linseed oil.

11. REFRIGERATION EQUIPMENT:

11.1 Furnish and install all labor, material and equipment necessary to provide individual refrigeration systems as listed in Item Specifications.

11.2 All work is to be done according to the highest industry standards and is subject to the complete satisfaction and approval of the Contracting Officer.

11.3 Each system shall incorporate, but not be limited to, the following items:

11.3.1 Vibration absorbing material under condensing unit.

11.3.2 Disconnect switch, automatic starting switch, motor protectors pressure limit switches and set of contacts on compressor motors to allow remote "On-Off" monitoring of units; all enclosed with interconnecting wires factory installed.

11.3.3 Liquid line sight glass.

11.3.4 Liquid line dehydrator filter.

11.3.5 Suction line accumulator.

11.3.6 Suction line filter.

11.3.7 Liquid storage tank.

11.3.8 Heat exchanger for each evaporator.

11.4 Where refrigerant suction line is trapped, use next size smaller pipe in vertical portion of the trap so as to acquire sufficient gas velocity for proper oil return.

11.5 Insulate suction and liquid lines from evaporators to condensing units with 1/2 inch foamed elastomer closed-cell preformed pipe insulation.

11.6 Drain lines in low temperature areas shall be wrapped with heater cable to prevent freezing. Provide stainless steel formed protectors to prevent damage to lines. Drain lines shall be chrome plated where exposed, except for compressor discharge lines when located in a machine room or concealed enclosure.

11.7 Refrigerant piping in each system shall be so designed that there shall not be over two pounds pressure drop between the compressor and most distant evaporator. The piping is to be dehydrated in an approved manner and each system held under 150 P.S.I. pressure for a period of 12 hours without loss of pressure. All systems must be tight against any leaks and shall sustain this pressure.

11.8 All systems shall be thoroughly dried out with carbon dioxide drying agent and evacuated by vacuum pump before charging with refrigerant. All systems shall be provided with a full charge of freon gas and wax-free oil for proper operation.

11.9 Provide strainers and scale traps on the refrigerant lines ahead of solenoid valves, back pressure valves, thermostatic expansion valves, compressors and at other points throughout the system, where indicated or required to protect the equipment from damage from foreign matter. Strainers may be a part of the valve.

11.10 Provide a three-way charging valve in each system, with one outlet properly capped against leaks.

11.11 Provide all relief lines required by the codes capped with a screen vent.

11.12 All refrigerant piping shall be properly supported by adjustable hangers spaced and adjusted to the drop required. Hangers for cold refrigerant lines shall be fastened outside of covering by bands.

11.13 On freezer system provide frost-free shut-off valves on each side of the expansion valve and dehydrator so that either can be replaced without pumping down the entire system.

12. DESCRIPTION OF EQUIPMENT BY ITEM NUMBERS:

12.1 Item 1, Shelving Chrome Wire: Amco "Duraspan", Hodges "Postmaster", Metropolitan Wire "Super Erecta" or approved equal, and conforming to applicable requirements of MIL-S-40144.

Six-tier shelving units 76 inch high posts.

Chrome plated with baked-on epoxy coating.

Shelves to be of open wire construction; 21 inches wide by 60 inches maximum length.

Use common standards wherever possible.

12.2 Item 2, Pallet: Amco "Duraspan", Hodges "Postmaster" Metropolitan Wire "Super Erecta" or approved equal, and conforming to applicable requirements of MIL-S-40144.

Chrome plated with baked on epoxy coating.

Shelf to be of open wire construction; 24 inches wide by 48 inches long.

12.3 Item 3, Table Receiving: 2 feet - 6 inches wide by 6 feet - 0 inches long by 2 feet - 10 inches high.

Eight inch high backsplash with ends closed.

Front, left and right edges rolled 2 inches by 180 degrees.

One - drawer.

Undershelf.

12.4 Item 4, .Scale Receiving: Colt (Fairbanks) 42-4073 BH, Hobart 7214, Toledo 2181 or approved equal.

Total capacity 400 pounds.

12.5 Item 5, Scale, Ingredient: Hobart 402-682, Toledo 3011-F or approved equal.

Side indication.

One pound beam.

Test weight set, avoir dupois.

12.6 Item 6, Bin Mobile: Food Equipment PB-17, Seco 47-150, Washington SI-150 FSC or approved equal.

12.7 Item 7, Table, Ingredient: 6 feet - 0 inches long by 2 feet - 6 inches wide by 2 feet - 10 inches high.

8 inch high backsplash with ends closed.

Front, left and right edges rolled 2 inches by 180 degrees.

Card holder overshelf.

Crossrails, front to back and across rear.

12.8 Item 8, Rack: Bucksco RD-3 series, Crescent Metal 207-1820 series, Victory Mobile OR-3-1818X or approved equal and conforming to applicable requirements of MIL-R-43814. Casters shall conform to applicable requirements of FF-C-77.

Solid bottom.

Corner bumpers.

Unit is to be compatible with Item 13, Refrigerator, Roll-in; Item 16, Refrigerator, Roll-thru; and Item 21, Food Warmer, Roll-thru.

5 inch diameter urethane tired swivel casters, two with brakes.

12.9 Item 9, Shelving, Stainless Wire, Mobile: Amco "Duraspan", Hodges "Postmaster", Metropolitan Wire "Super Erecta" or approved equal, and conforming to applicable requirements of MIL-S-40144.

Five tier shelving units, 64 inch high posts.

Stainless steel.

Shelves to be of open wire construction; 21 inches wide by 48 inches maximum length.

Stainless steel dollies with corner bumpers.

5 inch diameter urethane tired swivel casters.

12.10 Item 10, Pallet, Mobile: Amco "Duraspan", Hodges "Postmaster", Metropolitan Wire "Super Erecta" or approved equal, and conforming to applicable requirements of MIL-S-40144. Casters shall conform to applicable requirements of FF-C-77.

Stainless steel.

Shelf to be of open wire construction; 24 inches wide by 48 inches long.

5 inch diameter urethane tired swivel casters.

12.11 Item 11, Unassigned:

12.12 Item 12, Hand Sink: Seco HS-11-2H or approved equal.

12.13 Item 13, Refrigerator, Roll-In: Hobart E-2S, Traulsen RRI 2-32 LUT, Victory RIS-2D-S3 or approved equal and conforming to applicable requirements of MIL-C-43427.

12.14 Item 14, Table, Work: 10 feet - 0 inches long by 2 feet - 6 inches wide by 2 feet - 10 inches high.

All edges rolled 2 inches by 180 degrees.

Two - drawers, with cutting boards mounted below.

Undershelf.

12.15 Item 15, Counter Work, With Cabinets: Base Cabinets: 11 feet long by 2 feet - 8 inches wide by 3 feet - 0 inches high.

8 inch high splash at rear left and right sides.

Front edge turned down 2 inches by 90 degrees then back 3/4 inch tight to body.

Bottom and intermediate shelf.

Tier of three drawers.

Four-hinged doors.

Wall Cabinets: 11 feet - 0 inches long by 12 inches wide by 2 feet - 6 inches high.

Bottom and intermediate shelf.

Five - hinged doors.

12.16 Item 16, Refrigerator, Roll-Thru: Hobart ED-2S, Traulsen RRI 2-32 LPUT, Victory RIS-2D-S3 or approved equal and conforming to applicable requirements of MIL-C-43427.

Stainless steel backs.

12.17 Item 17, Slicer, With Stand: Slicer; Berkel 818, Globe 720, Hobart 1712 or approved equal.

Chute and Fence attachments.

Stand: Hobart 205025 or approved equal.

Casters, two with brakes, shall conform to applicable requirements of FF-C-77.

Wire unit 120 volts, single phase, cord and plug.

12.18 Item 18, Mixer With Stand: Mixer: Reynolds 620B, Blakeslee B20D, Hobart A-200D or approved equal to conform with Federal Specification OO-M-38; and as modified below:

20 quart stainless steel bowl.

Stand: Hobart 205024-1 or approved equal.

Casters, two with brakes, shall conform to applicable requirements of FF-C-77.

Wire unit for 120 volt, single phase, cord and plug.

12.19 Item 19, Sink, Preparation, Vegetable: 16 feet - 0 inches long by 2 feet - 8 inches wide by 2 feet - 10 inches high, and conforming to applicable requirements of MIL-S-19114.

8 inch high backsplash with ends closed.

Front, left and right edges turned up 3 inches by 90 degrees then rolled 2 inches by 180 degrees.

One - drawer with cutting board.

Undershelf between sink compartment and right end.

Weld in cone of Item 20, Disposer.

Crossrails front to back and across rear.

Two compartment sink - each compartment 24 inches wide by 12 inches deep.

Two - backsplash mounted faucets.

12.20 Item 20, Disposer: General Slicing (Red Goat) B3P-RC18 w/CC-SAR-N12 panel, Salvajor 300-303-18 w/WI-CP-AR panel, Waste King WK 300 APL w/PC-400 control or approved equal.

Vacuum breaker.

Pre-rinse spray with wall bracket: Fisher 2110, T & S B-113 or approved equal.

12.21 Item 21, Food Warmer, Roll-Thru: Hobart EDH-2S, Traulsen RIH 2-32LP, Victory VHIS-2D-3 or approved equal.

Stainless steel back.

12.22 Item 22, Table, Mobile: 4 feet - 0 inches long by 2 feet - 0 inches wide by 2 feet - 10 inches high.

All edges rolled 2 inches by 180 degrees.

Undershelf.

Casters, two with brakes.

12.23 Item 23, Food Cutter With Stand: Food Cutter: Hobart 84181-D, Toastmaster 5119 or approved equal.

9 inch vegetable slicer, and dicer attachments.

Stand: Hobart 205 026 or approved equal.

Casters, two with brakes.

Wire unit for 120 volt, single phase, cord and plug.

12.24 Item 24, Hood: Gaylord BD, Seco SW or approved equal.

12.25 Item 25, Range, Griddle Top: In the third line, immediately following "MIL-R-11295,", insert "Type II, Style 2, Grade A".

12.25 Item 25, Range, Griddle Top: General Electric CR42, Lang 36S-10, Toastmaster 20G1R or approved equal to conform with Military Specification MIL-R-11295; and as modified below:

6 inch high stainless legs with adjustable bullet feet.

12.26 Item 26, Range, Hot Top: General Electric CR 40, Lang 36S-2, Toastmaster 20M1R or approved equal to conform with Military Specification MIL-R-11295 and as modified below.

6 inch high stainless steel legs with adjustable bullet feet.

12.27 Item 27, Fryer Assembly: General Electric DK42 (2); CX 092 (3); CX 136 stand, 6 feet - 4 inches long; CX 227 casters; CX 034 (2) baskets; CX 056 (4) banking strips; Lang; Toastmaster or approved equal and conforming to applicable requirements of S-F-695.

Fryers and spreader enclosures to be secured to equipment stand.

12.28 Item 28, Table, Cook's: 7 feet - 0 inches long by 3 feet - 0 inches wide by 3 feet - 0 inches high.

All edges rolled 2 inches by 180 degrees.

4 feet - 6 inches long Overshelf, Undershelf and Pot Rack.

Two - drawers with cutting boards.

Stainless steel bracket for Pot Filler at sink end of table.

Pot Filler: T & S B-167 with B-1424 nozzle or approved equal.

Single compartment sink; 24" by 18" by 10" deep.

One - deck mounted faucet.

12.29 Item 29, Oven, Convection: General Electric CN 902, Garland EC-II-36, Toastmaster 3025 or approved equal to conform with Military Specification MIL-O-43633.

12.30 Item 30, Mixer, 60 Quart: Blakeslee CC-60D, Hobart H-600D, Reynolds 1060 or approved equal to conform with 00-M-38 and as modified below:

60 quart stainless steel bowl.

Bowl truck.

12.31 Item 31, Water Meter: Groen AC-40 or approved equal.

12.26 Item 26, Range, Hot Top: In the second line insert a period immediately following the word "equal" and delete the remainder of the paragraph.

12.33 Item 33, Braising Pan: At the end of the last line change the period to a comma and add "Type II, Class B, Style A, Size 4, Model A."

12.35 Item 35, Kettles (2) - 40 Gallon: Change the period to a comma at the end of the second line and add "Type I, Class B, Style 8."

12.32 Item 32, Steamer With Kettles, (2)-20 Quart: Market Forge A-Plus-E and Market Forge MT5T5 or approved equal to conform with S-C-1474 and RR-K-195. Steamer compartments shall provide capability for pressure or pressureless operation.

12.33 Item 33, Braising Pan: Market Forge 1800, Groen FPC-4-nine inch with water fill spout, South Bend BPE-40-M-9 or approved equal to conform with Military Specification MIL-P-23694.

12.34 Item 34, Floor Grate: Fabricated per detail drawing.

12.35 Item 35, Kettles (2) - 40 Gallon: Groen MW/D 40-40, Legion or approved equal and conforming to applicable requirements of RR-K-195.

12.36 Item 36, Hood: Gaylord BD, Seco SW, or approved equal.

12.37 Item 37, Hood Control Panel: Gaylord GPE-100A, Seco or approved equal. Unit must be of same manufacture as Item 24 and Item 36, Hoods.

Recessed installation.

Remote fire switch.

12.38 Item 38, Fire Protection System: "Automatic" Sprinkler Corporation "Range Guard" liquid chemical fire protection, or approved equal.

Installed in Item 24 and Item 36, Hoods by hood manufacturer.

12.39 Item 39, Conveyor, Tray Assembly: Dietary Products 96815-011 or approved equal.

Stainless steel finish.

Stainless steel undershelf.

Circuit breaker panel and individual outlets to accommodate Items 43, 44, 45, 46, 48, 49 and 52.

120/208 volt, three phase circuit breaker panel.

12.40 Item 40, Doily Unit: United Service Equipment CL-250-2 or approved equal.

12.41 Item 41, Dispenser Tray: AMF 59 series, Shelley TT, or approved equal. Verify tray size.

Wrap around bumpers.

12.42 Item 42, Starter Tray: Dietary Products "D-Line" starter station, Precision TST-45, United Service Equipment CL-250-3 or approved equal.

12.43 Item 43, Dispenser/Heater, Pellet Base: AMF 76-2103, Dietary Products 96557-020 Finessa T-2 or approved equal.

Wire unit for 208 volt, single phase.

12.44 Item 44, Dispenser, Plate: AMF 22 series, Serv-O-Lift 2TD2-STH or Shelley SDS2-H, or approved equal, and conforming to applicable requirements of MIL-T-82049.

Verify plate size.

Wrap around bumpers.

Wire unit for 120 volts, single phase.

12.45 Item 45, Table, Hot Food: Shelley PHC-4 or approved equal, and conforming to applicable requirements of MIL-T-82049.

Wire unit for 120/208 volt, single phase.

Overshelf protector case with front glass.

Fluorescent light.

12.46 Item 46, Dispenser, Dish: AMF 22 series, Serv-O-Lift 2TD2-STH, Shelley SDS2-H or approved equal.

Verify dish size.

Wrap around bumpers.

Wire unit for 120 volt, single phase.

12.47 Item 47, Table, Bread: 4 feet - 0 inches long by 2 feet - 6 inches wide by 2 feet - 10 inches high. Casters shall conform to the applicable requirements of FF-C-47.

Fabricate per detail drawing.

12.48 Item 48, Dispenser, Ice Cream: AMF 86-3320, Serv-O-Lift 655-F Mobile, Shelley SCF-36-M or approved equal.

Wire unit for 120 volt, single phase.

Stainless steel lid with locking device.

Wrap around bumper.

Aluminum divider trays.

12.49 Item 49, Dispenser, Milk: AMF 85-3320, Serv-O-Lift 655 Mobile, Shelley N-520M or approved equal.

Wire unit for 120 volt, single phase.

Stainless steel lid with locking device.

Wrap around bumper.

Aluminum divider trays.

12.50 Item 50, Dispenser, Dome Cover: AMF 76-2103, Dietary Products 96557-020, Finessa T2 or approved equal.

Wire unit for 208 volt, single phase.

12.51 Item 51, Unassigned:

12.52 Item 52, Grill, Mobile: Shelley PCG-60 base unit with General Electric CG 721 griddle in lieu of standard griddle unit or approved equals and conforming to applicable requirements of MIL-G-2338.

Wire unit for 208 volt, single phase, cord and plug.

Cutting board.

Stainless steel undershelf.

12.53 Item 53, Fire Protection System: "Automatic" Sprinkler Corporation "Range Guard" liquid chemical fire protection, or approved equal.

Installed in Item 54, Hood by hood manufacturer.

12.54 Item 54, Hood: Gaylord BD, Seco SI, or approved equal.

12.55 Item 55, Sink, Pot Washing: 17 feet - 0 inch long by 2 feet - 8 inches wide by 2 feet - 10 inches high and conforming to applicable requirements of MIL-S-19114.

8 inch high backsplash with ends closed.

Front, left and right edges turned up 3 inches by 90 degrees, then rolled 2 inches by 180 degrees.

Undershelf between sink compartment and right end.

Weld in cone of Item 57, Disposer.

Crossrails front to back and across rear.

Three compartment sink - left compartment 36 inches wide by 16 inches deep; remaining compartments 24 inches wide by 24 inches deep.

Three - backsplash mounted faucets.

Cut out for and install Item 56, Pot Washer in left sink compartment.

12.56 Item 56, Pot Washer: Kewanee K-99 or approved equal.

Install in left sink compartment of Item 55, Sink, Pot Washing.

12.57 Item 57, Disposer: General Slicing (Red Goat) B3P-RC18 w/CC-SAR-N12 panel, Salvajor 300-303-18 w/ WI-CP-AR panel, Waste King WK 300 APL w/PC-400 panel or approved equal.

Vacuum breaker.

Pre-rinse spray with wall bracket; Fisher 2110, T & S B-113 or approved equal.

12.58 Item 58, Pot Rack: Amco T-KEB-DNC-1, Eastern Steel 60-R4-M, Metropolitan Wire SN 246-5MP or approved equal.

24 inches by 48 inches shelf size.

12.59 Item 59, Dishwasher With Blower/Dryer and Pulper: Dishwasher w/Blower/Dryer: Hobart FRC 64-RS-BD or approved equal to conform with Federal Specification OO-D-1390 and as modified below:

Clockwise operation.

Inspection doors and clean-out drawers to face out.

Steam coil tank heaters.

Single hot water, waste and electrical connections.

Overall length of unit - 21 feet - 0 inches.

Stainless steel extended vent hoods with locking dampers and stainless steel ducts to 6 inches above finish ceiling. Provide concealed fastened stainless steel angle trim at ceiling duct penetration.

Automatic fill.

Reduced voltage pilot circuit.

Modular control center.

Stainless steel front panel, frame, legs, feet and conveyor.

Hose and reel mounted under table.

Stainless steel scrapping trough - 12 feet - 0 inches long.

Remote pushbutton "stop - start" station mounted to underside of scrapping trough on a stainless steel bracket.

Pitch dishtables to drain to dishwasher so as to eliminate standing water.

Cup/glass rack overshelf with empty rack storage shelf above, adjustable in height and front-to-back position - 12 feet - 0 inches long.

Unit must accept up to 18 inch by 26 inch sheet pans.

Steam operated booster heater: Hobart Thrush 320 or approved equal.

Pulper: Hobart EL5-1224 UC or approved equal.

Provide with Additive Injector Pump and Feed Trough Pump.

12.60 Item 60, Soak Sink: 27 inches long by 27 inches wide by 34 inches high.

All edges rolled 2 inches by 180 degrees.

Single compartment sink - 23 inches by 23 inches by 25 inches deep.

Lever operated waste.

Casters, two with brakes, shall conform to applicable requirements of FF-C-77.

12.61 Item 61, Unassigned:

12.62 Item, 62, Dish Truck: AMF 64-2437, Serv-O-Lift D360, Shelley DT-4 or approved equal.

Rubber bumpers.

12.63 Item 63, Rack Dolly: AMF 32-1549, Serv-O-Lift 722, Shelley RCD-1 or approved equal.

Rubber bumpers.

12.64 Item 64, Cleaner/Sanitizer, Mobile: Economics Laboratory Model P, Sage Systems 310 T-P or approved equal.

12.65 Item 65, Detergent System: Provided by the Government.

12.66 Item 66, Hose Station: Fisher 2982 with 2805 valve, T & S B-1400 with B-S11 valve or approved equal.

All piping to be concealed in wall.

12.67 Item 67, Cart, Patient Tray: Caddy TD-620-D, Shelley HDC-20 or approved equal.

Verify tray size.

6 inch diameter polyurethane tired casters, two with brakes, conforming to applicable requirements of FF-C-77.

12.68 Item 68, Cart, Cafeteria Bussing: Crescent 113-189-18 or approved equal.

Verify tray size.

12.69 Item 69, Hood: Gaylord BD, Seco SI, or approved equal.

12.70 Item 70, Hood Control Panel: Gaylord GPE-100A, Seco or approved equal.

Unit must be of same manufacturer as Item 54 and Item 69, Hoods.

Recessed installation.

12.71 Item 71, Fire Protection System: "Automatic" Sprinkler Corporation "Range Guard" liquid chemical fire protection, or approved equal.

Installed in Item 69, Hood, by hood manufacturer.

12.72 Item 72, Dispenser, Tray: Shelley FT2-SN series or approved equal.

Verify tray size.

Casters, two with brakes.

Twenty stainless steel silverware cylinders.

Wrap-around bumpers.

12.73 Item 73, Cafeteria Counter, Griddle: Shelley KCG-60 base unit with General Electric CG 721 griddle in lieu of standard griddle unit or approved equals and conforming to applicable requirements of MIL-G-2338.

Tray slide with insert.

Cutting board.

Protector case.

12.74 Item 74, Cafeteria Counter, Soup/Sandwich: Shelley Custom or approved equal, conforming to applicable requirements of MIL-D-43300, fabricated as follows:

Top: 8 feet - 0 inches long by 28 inches wide.

Four recessed stainless steel hot food warmers.

Refrigerated cold pan - 25-3/4 inches long by 19-7/8 inches wide by 6 inches deep. Provide horizontal and vertical adaptor bars to permit the use of fractional size pans.

Exterior Body:

Seamless, one-piece molded fiberglass.

Beneath cold pan provide refrigerated storage compartment - 17-3/8 inches high by 26-1/8 inches wide by 21-1/2 inches deep.

Tray slide with insert.

Cutting board.

Protector case.

Fluorescent lights.

Single electrical connection.

12.75 Item 75, Cafeteria Counter, Hot Food: Shelley KH-6 or approved equal and conforming to applicable requirements of MIL-T-82049.

Tray slide with insert.

Cutting board.

Protector case.

Fluorescent lights.

Heat lamps.

Two - convenience outlets: Provide 120 volt, single phase outlets, one at each end of rear of unit.

12.76 Item 76, Cafeteria Counter, Salad: Shelley KCSC-96 Modified or approved equal, conforming to applicable requirements of MIL-D-43300.

Cold pan to be only 67-1/2 inches long per drawing.

At right end, provide two-Shelley SD built-in plate dispensers. Verify size of plates.

Tray slide with insert.

Two-tier display case over cold pan.

Fluorescent lights.

Cold pan to be 6 inches deep.

12.77 Item 77, Cafeteria Counter, Dessert: Shelley KCSC-96 Modified or approved equal, conforming to applicable requirements of MIL-D-43300.

Cold pan to be only 53-1/2 inches long per drawing.

At right end, provide two - Shelley SD built-in dish dispensers. Verify size of dishes.

Space between dish dispensers and cold pan to accommodate Item 78, Dispenser, Soft-Serve.

Tray slide with insert.

Two-tier display case over cold pan.

Fluorescent lights.

Cold pan to be 6 inches deep.

12.78 Item 78, Dispenser, Soft Serve: Sweden 1-550 or approved equal to conform with Mil. Spec. MIL-I-43705.

12.79 Item 79, Dispenser, Plate: AMF 22 series, Serv-O-Lift 2TD2-STH, Shelley SDS2 H or approved equal.

Verify plate size.

Wrap around bumpers.

12.80 Item 80, Dispenser, Dish: AMF 22 series, Serv-O-Lift 2TD2-STH, Shelley SDS2H or approved equal.

Verify dish size.

Wrap around bumpers.

12.81 Item 81, Unassigned:

12.82 Item 82, Food Warmer, Pass-Thru: Franklin Products 2306P or approved equal.

Stainless steel kickplate at serving area side of unit stainless steel angle trim at wall penetration, concealed fastened, both sides.

12.83 Item 83, Unassigned:

12.84 Item 84, Cafeteria Counter, Beverage: Shelley Custom or approved equal, fabricated as follows:

Top: 21 feet - 0 inches long by 28 inches wide.

Rear, left, and right edges turned up 2 inches by 45 degrees then down 1 inch with ends closed.

Cut-outs for Item 85, Dispenser, Glass; Item 86, Ice Maker/Dispenser, w/Soda System; Item 90, Dispenser, Mug; and Item 93, Condiment Section.

Two - removable stainless steel anti-splash drip grates each 3 feet - 0 inches long; one in front of Item 88, Dispenser, Milk and one centered between Item 90 and Item 92.

Exterior Body:

Molded fiberglass to match remaining Cafeteria Counters (Items 73, 74, 75, 76, and 77) with stainless steel, trim strips at panel intersections.

Mount counter on 6 inch high stainless steel adjustable legs with 6 inch high stainless steel kickplate.

12.84 Item 84, Cafeteria Counter, Beverage: At the end of the third line change the period to a comma and add "one piece." In the 12th line change "Exterior Body" to "Exterior Body Units". In the 14th line omit the comma immediately following the word "steel". In the 15th line change "panel" to "unit".

Body shall be provided with two stainless steel louvered panels to assure adequate ventilation for Item 86, Ice Maker/Dispenser, w/Soda System.

Body shall be provided with two doors for access to the Soda System carbonator unit, carbon dioxide and syrup tanks.

Furnish two stainless steel louvered panels for installation in wall at rear of counter to assure adequate ventilation for Item 86, Ice Maker/Dispenser w/Soda System.

Tray slide with insert.

12.85 Item 85, Dispenser, Glass: Shelley CBG 2020 or approved equal.

Install in Item 84, Cafeteria Counter, Beverage.

12.86 Item 86, Ice Maker/Dispenser, With Soda System: Shelley AIDM-150 or approved equal and conforming to applicable requirements of MIL-D-43738 and MIL-I-43682.

Install in Item 84, Cafeteria Counter, Beverage.

Provide Four-Bar-O-Matic or approved equal carbonated beverage dispensing heads.

Soda System:

Eaton K-Way KW 600 or approved equal.

Soda System to be provided with all flexible connectors, regulators, gauges, fittings, water filter, carbon dioxide change-over kit, change-over valve, high pressure regulator and all material necessary for the complete installation of the supply conduit and lines and the connection of the syrup figals to the supply conduit.

Conduit from the soda factory to the dispensing heads is to supply each head with one carbonated drink.

12.87 Item 87, Dispenser, Beverage: Dripcut Starline T, Jet Spray TJ3 or approved equal.

12.88 Item 88, Dispenser, Milk: Norris N-15-M or approved equal.

12.89 Item 89, Dispenser, Iced Tea: Columware T-2 or approved equal to conform with MIL-D-43845.

12.86 Item 86, Ice Maker/Dispenser,.....In the fifth line, immediately following "Four-Bar-O-Matic", insert ", Eaton K-Way".

12.90 Item 90, Dispenser, Mug: Shelley CBG-2020H or approved equal.

Install in Item 84, Cafeteria Counter, Beverage.

12.91 Item 91, Unassigned:

12.92 Item 92, Dispenser, Hot Chocolate: Columware CC-1, Cornelius 39-1241, Jet Spray HC2 or approved equal to conform with Military Specification MIL-D-43715.

12.93 Item 93, Condiment Section: Cut out top of Item 84, Cafeteria Counter, Beverage to receive two - 12 inch by 20 inch steam table pans.

Provide horizontal and vertical adaptor bars to permit the use of fractional size pans.

12.94 Item R-1, Frozen Stores: Bally, Chrysler-Koppin, Elliott Williams or approved equal.

Sized per drawing and constructed per paragraph entitled Refrigerated Rooms (Prefabricated Panel Type), of this Section.

12.95 Item R-2, Meat Thaw Refrigerator: Bally, Chrysler-Koppin, Elliott Williams or approved equal.

Sized per drawing and constructed per paragraph entitled Refrigerated Rooms (Prefabricated Panel Type), of this Section.

12.96 Item R-3, Refrigerated Stores: Bally, Chrysler-Koppin, Elliott Williams or approved equal.

Sized per drawing and constructed per paragraph entitled Refrigerated Rooms (Prefabricated Panel Type), of this Section.

12.97 Item R-4, Issue Refrigerator: Bally, Chrysler-Koppin, Elliott Williams or approved equal.

Sized per drawing and constructed per paragraph entitled Refrigerated Rooms (Prefabricated Panel Type), of this Section.

12.98 Item R-5, Produce Refrigerator: Bally, Chrysler-Koppin, Elliott Williams or approved equal.

Sized per drawing and constructed per paragraph entitled Refrigerated Rooms (Prefabricated Panel Type), of this Section.

12.99 Item R-6, Dairy Refrigerator: Bally, Chrysler-Koppin, Elliott Williams or approved equal.

Sized per drawing and constructed per paragraph entitled Refrigerated Rooms (Prefabricated Panel Type), of this Section.

12.100 Item S-1, Refrigeration System For R-1: Compressor/Condenser Unit: Two required - Copeland W3WL-0750, Dunham Bush WH77PELF or approved equal.

Minimum capacity: 30,400 BTU/hour at -25 degrees Fahrenheit evaporating temperature.

At condensing unit, provide all control wiring between time clock, pressure switches, motor starter and magnetic contractor for heating elements, all brought to a junction box with plainly marked terminals.

Evaporator Unit - Two required: Bohn LET 270, Dunham - Bush ECE-360 or approved equal.

Minimum capacity: 2,700 BTU/hour/degree Fahrenheit.

At evaporator, provide room thermostat and all internal control wiring between room thermostat, defrost termination thermostat, fan delay thermostat, fans and coil heaters, all brought to a junction box with plainly marked terminals corresponding to those at the condensing unit.

There shall be two separate systems piped independently of each other and controlled by one thermostat so that they start and stop together, but arranged so that either system can be shut down while the other system continues operation.

12.101 Item S-2, Refrigeration System for R-2: Compressor/Condenser Unit: Copeland EBWM-0050, Dunham-Bush WH5HCL or approved equal.

Minimum capacity: 5,250 BTU/hour at 20 degrees Fahrenheit evaporating temperature.

Evaporator Unit: Bohn ADT 52, Dunham-Bush UCLS52 or approved equal.

Minimum capacity: 520 BTU/hour/degree Fahrenheit.

One - 1,000 watt strip heater mounted on face of evaporator unit, completely wired, thru thermostat so that heater strip is activated when the temperature of the refrigerator drops two degrees Fahrenheit below nominal box temperature and the refrigeration cycle is activated when the temperature of the refrigerator rises four degrees Fahrenheit above the nominal box temperature. The thermostat shall provide for a two minute time delay between the heat and refrigeration cycles.

12.102 Item S-3, Refrigeration System for R-3: Compressor/Condenser Unit: Copeland WSWH-0200, Dunham-Bush WH20H or approved equal.

Minimum capacity: 15,350 BTU/hour at 20 degrees Fahrenheit evaporating temperature.

Evaporator Unit: Bohn ADT-156, Dunham-Bush UCLS 156 or approved equal.

Minimum capacity: 1,560 BTU/hour/degree Fahrenheit.

12.103 Item S-4, Refrigeration System For R-4: Compressor/Condenser Unit: Copeland WSWM-0100, Dunham-Bush WH10HCL or approved equal.

Minimum capacity: 9,400 BTU/hour at 20 degrees Fahrenheit evaporating temperature.

Evaporator Unit: Bohn ADT 90, Dunham-Bush UCLS104 or approved equal.

Minimum capacity: 900 BTU/hour/degree Fahrenheit.

12.104 Item S-5, Refrigeration System For R-5: Compressor/Condenser Unit: Copeland WSWM-0100, Dunham-Bush WH10HCL or approved equal.

Minimum capacity: 9,400 BTU/hour at 20 degrees Fahrenheit evaporating temperature.

Evaporator Unit: Bohn ADT 90, Dunham-Bush UCLS104 or approved equal.

Minimum capacity: 900 BTU/hour/degree Fahrenheit.

12.105 Item S-6, Refrigeration System For R-6: Compressor/Condenser Unit: Copeland WSWM-0150, Dunham-Bush WH15C or approved equal.

Minimum capacity: 13,450 BTU/hour at 20 degrees Fahrenheit evaporating temperature.

Evaporator Unit: Bohn ADT-104, Dunham-Bush UCLS 104 or approved equal.

Minimum capacity: 1,040 BTU/hour/degree Fahrenheit.

13. INSTALLATION:

13.1 General: The contractor shall assume total responsibility for any items lost, stolen or damaged in transit to the food service department. On delivery, the contractor shall inventory and inspect all equipment and make proper claims as required.

13.2 All work done to install equipment must be under the direction of an experienced installation supervisor.

13.3 Provide labor or make local arrangements for handling, uncrating and setting-in-place of all equipment. Equipment is not to be installed until all ceilings, lighting, walls and floors have been installed and room broom cleaned, except walk-in refrigerator construction and exhaust hood installation.

13.4 Provide technical assistance to other trades when they are making their final connections to the equipment.

13.5 The fit of all equipment as it joins all walls, ceiling, floor surfaces and corners shall be tight. Such items shall have selvage to allow for a perfect fit.

13.6 Enclosures and turnbacks to wall (horizontal and vertical) shall have the proper amount of sealing compound pressed into a ribbon, with the excess wiped out to a radius fillet. Where necessary and to eliminate shifting and the subsequent breaking of this seal, items shall be anchored to the floor and walls with suitable masonry anchors. All backsplashes shall have 4 inch wide "Z" clips on maximum 24 inch centers.

13.7 Any item requiring trim shall be trimmed with 16 gauge stainless steel angles as required concealed fastened to unit and adjoining surface. Rivets or exposed screws are not acceptable fasteners.

13.8 All permanent equipment shall be anchored to surrounding construction as required. Install all ground anchors, clips, etc., required in sufficient time in advance of actual installation to prevent any delay in the work of other trades.

13.9 Drill all holes necessary for drainage pipes, electrical conduits, refrigeration lines, both supply and return, and any other piping necessary, and furnish and install all wall sleeves and plates required. Plates shall be cast brass, chrome or heavy nickel plate, polished and fastened to sleeves. Sleeves shall fit snugly around pipe covering and shall be caulked in place; space between sleeve and covering shall be caulked with brine putty. Sleeves through floors shall be installed with ends flush with underside of slab and projecting 3 inches above the floor; where through building walls, they shall have ends flush with sides of the wall.

13.10 All plumbing trim, electrical components and other items required to make the utility connections shall be plainly tagged and marked, indicating the equipment each piece is required for, and transmitted to the mechanical or electrical trades requiring a signed receipt upon delivery thereof.

13.11 Factory finished equipment shall not be painted (except as otherwise specified) but all damaged, scratched or refinished areas shall be touched-up to match original finish.

13.12 Provide securely anchored painted angle iron stand or wall bracket assembly (minimum 2 inch by 2 inch by 3/16 inch angles) for walk-in refrigeration compressor/condenser units.

13.13 All water piping, waste piping, electrical conduits and fire protection system piping provided under this section shall be either chrome plated or covered with an 18 gauge stainless steel enclosure where exposed.

14. TESTING AND INSTRUCTION:

14.1 Tests: Upon completion, but before final acceptance, perform field tests on each piece of equipment to determine that all components, including controls, safety devices, and attachments, operate as specified and that the equipment is properly installed and adjusted. Test all gas, steam, refrigerant, and liquid carrying components for leaks. Subject to terms and conditions set forth elsewhere in the contract, the Government will provide water, gas, steam and electricity required for tests. The Contracting Officer will witness all field tests. Give the Contracting Officer fourteen days prior notice of dates and times scheduled for tests.

14.2 Operate refrigeration systems for a period of three days and make all necessary adjustments to controls, thermostats, so as to insure proper system operation.

14.3 Have all tanks, such as kettles, steamers and steam generators, inspected, tested and approved by a qualified pressure vessel inspector acceptable to the Contracting Officer and secure all necessary permits. Provide two copies of the inspector's report to the Contracting Officer.

14.4 When the food service equipment has been tested and is operating properly, furnish a qualified technician to spend sufficient time on the premises, instructing the required personnel in the proper function, methods of adjustment, maintenance and care of each piece of equipment herein specified to the satisfaction of the Contracting Officer. Coordinate instruction dates and time schedules with the Contracting Officer and notify him in writing two weeks prior to the intended instruction period so that appropriate personnel will be present. Submit in writing to the Contracting Officer the details of instruction given and personnel present.

14.5 Posted Operating Instructions: Furnish instructions framed under durable clear plastic sheets suitable for wall mounting for Items 24, 36, 54 and 69, Hoods. These instructions shall contain, but not be limited to instructions for start-up and shut-down, economical operation, procedure to follow in the event of equipment failure and instructions on normal maintenance.

---END---

SECTION 11700. GENERAL REQUIREMENTS FOR MEDICAL EQUIPMENT

1. APPLICABLE PUBLICATIONS: The following publications of the issues listed below, but referred to thereafter by basic designation only, form a part of this specification to the extent indicated by the references thereto:

1.1 Federal Specifications:

CC-M-1807 Motor, Alternating-Current Fractional and Integral Horsepower (500 HP and Smaller).

1.2 National Fire Protection Association (NFPA) Publications:

70-1978 National Electrical Code.

1.3 Underwriters' Laboratories, Inc.:

UL 544-72 Standard for Safety, Medical and Dental Equipment.

2. RELATED WORK COVERED ELSEWHERE:

2.1 Equipment Identification: Refer to equipment schedules on the drawings for a listing of equipment, the logistical responsibility for each equipment item, and a listing of the applicable technical specification sections covering the specific requirements of equipment.

2.2 Specific Technical Requirements: Refer to technical specification section listed in the schedule on the drawings for specific requirements of equipment for which this section provides general requirements.

3. QUALITY CONTROL:

3.1 General: Approvals, except those required for field installations, field applications, and field tests shall be obtained before delivery of material or equipment to the project site.

3.2 Manufacturer's Qualifications: In order to qualify for consideration, the Contractor shall, within sixty days after receipt of written notice from the Contracting Officer, submit certification of the following regarding the manufacturers of the proposed equipment.

3.2.1 The existence of a qualified and authorized service organization that will respond within 8 hours on a working day. The service organization shall be staffed with full-time factory trained and experienced equipment specialists.

3.2.2 The equipment items proposed are the latest design and in current production.

3.2.3 Factory Inspection: If deemed necessary to determine qualifications of the manufacturer to produce equipment which will meet requirements of the contract specifications for design, materials, workmanship, and performance, the Contractor shall make available for inspection and testing one complete representative sample of each of the types of items listed in the schedule. Such inspection and testing of the sample equipment will be made by the Contracting Officer or his representative at the manufacturer's plant at no additional expense to the Government. Equipment undergoing engineering and field testing by the manufacturer or his agents will not be deemed to qualify under this provision.

3.3 Product's Qualifications: It is not the intention of these specifications to limit consideration of products. The product specified establishes standards for each item. Deviation from these standards shall be submitted for approval before the piece of equipment is ordered. The standards are as follows:

3.3.1 Size of equipment

3.3.2 Function of equipment

3.3.3 Standard and listed accessories

3.3.4 Control of equipment

3.3.5 Performance of equipment

3.3.6 Construction of equipment

3.4 Substitutions: An item proposed in lieu of an item specified shall meet each of the standards listed above as a minimum requirement. Additional cost caused by acceptance of proposed unit shall entail no additional expense to the Government. Determination of each standard shall be as follows:

3.4.1 Size: Layouts are based on unit specified. If a proposed unit's size differs from the item specified and is accepted, submit a revised layout, design calculations, drawings and specifications for change in the building to accommodate the proposed equipment, for approval.

3.4.2 Function: Additional functions of any piece of proposed equipment will not be considered as an improvement over the unit specified as determined by the project's requirements. If such functions are standard equipment of a proposed item, and the function is not desired by the Government, then the function shall be completely removed from the unit, if the unit is otherwise accepted. Any additional refinement in control or accessibility of a function in the proposed unit will be considered an improvement over the specified unit.

3.4.3 Accessories: Accessories, like functions, will be judged as listed above. If accepted, accessories which are standard for the specified model shall be included on the proposed model. Additional accessories listed which are not standard for the specified unit, but are standard for the proposed unit shall be considered an improvement. Any accessory which exceeds the minimum performance requirement of the accessory specified will be considered an improvement.

3.4.4 Appearance: Except for the following aesthetic qualities of design, other aesthetic qualities will not be considered an improvement:

(a) Uniformity of finish

(b) Variety of finish selections

(c) Relationship of unit to adjoining units

4. LOGISTICAL RESPONSIBILITY: Equipment is scheduled on the drawings with logistic responsibility designated by a letter code to be interpreted as follows:

4.1 Category "A" Equipment: This equipment shall be Contractor furnished, Contractor installed. Provide this equipment in the quantity and locations indicated on the drawings.

4.2 Category "B" Equipment: This equipment shall be Government furnished, Contractor installed. Install this equipment in quantity and locations indicated on drawings.

4.3 Category "E" Equipment: This equipment includes Category "E1" and Category "E2". For purposes of this contract, Contractor shall relate to this category as follows:

4.3.1 Category "E1" Equipment: This equipment shall be Government furnished, Government installed. Contractor shall provide rough-in for this equipment.

4.3.2 Category "E2" Equipment: This equipment shall be Government furnished, Contractor installed. Install this equipment in quantity and locations indicated on the drawings.

5. SUBMITTALS:

5.1 General: Submittals listed herein shall be submitted to and approved by the Contracting Officer.

5.2 Equipment Lists:

5.2.1 Within sixty days after award of contract and before any equipment is ordered, a complete list in triplicate of all medical and dental equipment scheduled herein as Contractor furnished shall be submitted to and approved by the Contracting Officer in loose leaf binders with index.

5.2.2 Include references and symbols, where applicable, that correspond with the Contract Documents, together with names and addresses of manufacturers and catalog numbers and trade names of each item.

5.2.3 Supplement lists with manufacturer's literature, data sheets, diagrams, drawings and other descriptive data for each referenced item, necessary to evaluate utility considerations, dimensions and appearance of the items and materials.

5.3 Manufacturer's Literature:

5.3.1 Installation Instructions: Submit triplicate copies of manufacturer's printed specifications and installation requirements.

5.3.2 Operating and Service Manuals: Provide one each, with each unit of equipment furnished for the project. Securely tape or otherwise fasten this copy to the equipment to which it pertains. In addition to this copy, upon completion of the project, furnish two copies of service manual for each type of unit in the project. For example, if there are five of each of one product, provide one copy of the approporiate service manual with each unit and in addition to these copies, upon completion of the work, furnish two copies to the Contractor Officer.

5.4 Shop Drawings:

5.4.1 Show actual layout of installations pertinent to this work. Standard printed sheets containing information not applicable to this work are not acceptable as shop drawings.

5.4.2 Indicate details of construction and rough-in requirements.

5.4.3 Verify job conditions affecting the work and obtain accurate measurements for incorporation into shop drawings.

5.5 Samples: Furnish manufacturer's color chips or fabric swatches or both as applicable for items requiring selection of these finishes.

5.6 Certificates:

5.6.1 Procedure: Submit certificates before ordering materials and equipment. Approval of certificates is required before products may be determined acceptable.

5.6.2 Certificates of Conformance: Submit four copies of certificates attesting that materials and equipment meet the specified requirements.

5.6.3 Certified Test Reports: Before ordering materials and equipment, four certified copies of the reports of all tests required in referenced publications or otherwise specified shall be submitted and approved. The testing shall have been performed in a laboratory meeting the requirements specified in the Quality Control section of Division 1. The tests shall have been performed within three years of submittal of the report for approval. Test reports shall be accompanied by certificates from the manufacturer certifying that the tested material and equipment is of the same type, quality, manufacture, and make as that proposed to be supplied.

6. PACKAGING AND PROTECTION:

6.1 Packaging and Transporting: Each unit of equipment shall be placed in a substantial container or crate for safe transportation to final destination. The shipping container or crate for heavy equipment shall be constructed on skids to faciliate handling by lift equipment.

6.2 Marking: Clearly and legibly indicate on exterior of each container or crate the shipping address, and a brief description of contents. Fasten to outside of container a packing list and complete instructions for uncrating equipment and setting it in place. Protect such information in a weatherproof envelope.

6.3 Protection: During storage and until completion and acceptance, properly protect all materials and equipment from damage. Before acceptance, remove all protective coverings, thoroughly clean surfaces, inside and outside, and leave equipment free from defects, damage and blemishes.

7. MATERIALS:

7.1 General: Materials shall be in accordance with requirements specified for each item. All materials shall be new and free from defects and imperfections that might affect both the serviceability and appearance of the finished product. Where finish or materials or both are not specified, manufacturer's standard finish or materials is acceptable.

7.2 Electrolytic Prevention: Make provisions to prevent electrolysis where metal parts are welded or otherwise fastened together.

8. EQUIPMENT:

8.1 Safety: All medical and dental equipment shall conform to UL 544. In lieu of Underwriters' Laboratories, Inc. approval, consideration will be given to certified test reports of a nationally recognized independent testing laboratory competent to perform such testing, indicating conformance with all UL 544 requirements including method of test.

8.2 Electrical Motors: Unless otherwise shown on electrical drawings, equipment with motors of 1/3 horsepower or less shall be suitable for operation from a 120 volt, single phase, 60 Hz supply. Motors shall be of sufficient size for duty to be performed, and not exceed their nameplate rating when driven equipment is operating at specified capacity under the most severe conditions likely to be encountered. Fractional horsepower motors shall conform to CC-M-1807.

8.3 Plumbing Sanitary Safeguard: Equipment for direct atttachment to water supply system shall be designed to prevent backflow of polluted water or waste into water supply system and into aseptic portions of equipment.

9. MANUFACTURER'S IDENTIFICATION: Unless otherwise specified, the following listed applicable information shall be affixed in a permanent manner to each item of equipment. The information shall be placed in a suitable location on the product and be proportionate to size of equipment.

9.1 Name of manufacturer or registered trade name.

9.2 Manufacturer's type designation and model number.

9.3 Serial number.

9.4 Utility ranges or capacity, including voltage and watt rating or voltage and amperage rating if electrically heated or powered.

10. INSTALLATION:

10.1 Cutting and Patching of Construction: The work shall be carefully laid out in advance. Cutting shall be carefully done, and damage to building, and piping, wiring or equipment as a result of cutting for installation shall be patched by skilled mechanics of the trade involved, at no additional expense to the Government.

10.2 Setting and Connection: Set and connect equipment plumb and level in accordance with manufacturer's instructions and recommendations. Securely anchor and attach items and accessories. Make connections between equipment and work of others in a neat manner, and install equipment so that work of others will not be damaged.

10.3 Cleaning and Adjusting: Carefully test and adjust equipment for proper operation. Lubricate moving parts if required by manufacturer's specifications. Prior to acceptance of the project, clean medical equipment both inside and outside and leave equipment free from defects, damage and blemishes.

11. FIELD TESTS AND INSPECTION:

11.1 Inspection: Thoroughly inspect finished articles for compliance with specifications.

11.2 Tests: Contractor shall perform any specified field tests of installed equipment. Contractor shall provide all labor, equipment and incidentals required for these tests. Contracting Officer will witness all field tests. Contractor shall give Contracting Officer ample notice of dates and times scheduled for tests. Deficiencies shall be corrected and the item completely retested at no additional expense to the Government.

---END---

SECTION 11701. CASEWORK, METAL AND WOOD

1. APPLICABLE PUBLICATIONS: The following publications of the issues listed below, but referred to hereafter by basic designation only, form a part of this specification to the extent indicatd by references thereto:

1.1 Federal Specifications:

TT-S-00227E(3)	Sealing Compound; Elastomeric Type, Two Component (for Calking, Sealing, and Glazing in Buildings and Other Structures).
WW-P-541D/ GEN (1)	Plumbing Fixtures, Land Use.

1.2 Military Specifications:

MIL-C-20709C	Casework, Metal and Wood.

1.3 American Society for Testing and Materials (ASTM) Publications:

A167-74	Stainless and Heat-Resisting Chromium-Nickel Steel Plate, Sheet, and Strip.
A568-74	Steel, Carbon and High-Strength Low-Alloy Hot-Rolled Sheet, Hot-Rolled Strip, and Cold-Rolled Sheet, General Requirements.

2. DESCRIPTION:

2.1 Casework: The work includes the furnishing and installation of casework, complete, including built-in sinks with trim and fittings specified in this section.

2.2 Related Work Not Included in This Section: The following items of related work are not included in this section:

2.2.1 Electrical Requirements: The wiring required for electrical connections to the equipment shall be as specified in section entitled "Interior Wiring Systems".

2.2.2 Plumbing: The rough-in and connection of all hot and cold water and drain lines to the applicable equipment and providing all valves, traps, and controls required for the operation of the equipment shall be as specified in section entitled "Plumbing". Refer to section entitled "Plumbing" for specifications of other counter sinks which shall be furnished and installed in the casework.

2.2.3 Gas Piping: Unless indicated or specified otherwise, the connections to the equipment shall include all piping, control valves, and regulators as specified in section entitled "Gas Piping".

3. QUALITY CONTROL:

3.1 General: Approvals, except those required for field installation and field tests, shall be obtained before delivery of materials or equipment to the project site.

3.2 Factory Tests and Inspections: Except as otherwise specified herein, factory tests and inspections for materials and equipment for which inspections and tests are specified herein or in referenced documents may be waived, provided certified copies of test reports performed on previously manufactured materials are submitted to and approved by the Contracting Officer. Test reports shall be accompanied by statements from the manufacturer certifying that the previously tested material is of the same type, quality, manufacture and make as that proposed for this project.

4. SUBMITTALS:

4.1 Shop Drawings: Shop drawings required by MIL-C-20709 and fabrication drawings for specialized items shall be submitted to and approved by the Contracting Officer. Submit five sets of shop drawings for each item.

4.2 Samples: Samples required by MIL-C-20709 shall be submitted to and approved by the Contracting Officer.

5. REQUIREMENTS:

5.1 General Requirements: Casework and sink units shall conform to the requirements of MIL-C-20709 and shall be arranged and located within the facility as shown or indicated on the drawings. All items shall be completely installed including connections to utilities as required for proper operation. Casework and sink units items are identified on drawings with numbers preceded by the letters "C" and "D". These numbers are Joint Schedule Numbers which are the same in MIL-C-20709. Refer to equipment schedule for joint schedule numbers for items required.

5.2 Materials and Finish: Conform to MIL-C-20709 and ASTM A568.

5.2.1 Medical Casework: Unless otherwise indicated or specified, medical casework shall be carbon steel with baked enamel finish or stainless steel. Paint color shall be as shown on the color schedules selected from the complete range of manufacturer's standard colors.

5.2.2 Dental Operatory Casework: Dental operatory casework shall be plywood core, particleboard core, or metal core at the manufacturer's option, covered with laminated plastic sheets. Pattern, color, and finish of

decorative laminated plastic for exteriors of casework shall be as shown on the color schedule selected from a minimum of 12 solid color samples.

5.2.3 Prosthetic Dental Laboratory Casework: Unless otherwise indicated or specified, prosthetic dental laboratory casework shall be carbon steel with baked enamel finish. Paint color shall be as shown on the color schedules selected from the complete range of manufacturer's standard colors.

6. INSTALLATION: Casework shall be secured in place in true alinement, level, and plumb, and so installed that the work of other trades will not be damaged during installation. Units shall be secured to cleats that have been anchored to building structure with toggle or expansion bolts. Wall-hung cabinets shall be installed in such manner as to firmly and rigidly support the weight of the contents of the cabinets. Floor-mounted metal cabinets shall be set on a common metal base in assemblies up to 6 feet in length where located in rooms having concrete or resilient flooring. Cabinets shall be bolted to bases at cabinet corners. Metal bases shall be faced with resilient material to match base provided for the space where cabinets are located. Adjoining cabinets in an assembly shall be joined together at top and bottom of front and back with bolts placed inconspicuously inside cabinets. Openings in the work between casework and wall surfaces due to irregularity of surfaces shall be sealed flush with type II, class B sealant conforming to specification TT-S-00227. Exposed to view openings larger than joints in tile work shall be closed with filler or scribing strip of the same material and finish as adjacent casework. Filler shall be cut to the contour of the wall surface and secured to the casework with concealed sheet-metal screws. Width and number of fillers used shall be the minimum consistent with need and in no case shall filler exceed 6 inches in width. In rooms having ceramic tile floors, floor-mounted metal cabinets shall be set on concrete or masonry bases with exposed faces finished the same as other base in the room. Standing-height counter tops shall be so installed that working surface will be 36 to 37 inches above finished floor. Except as otherwise indicated, desk-height counter tops shall have working surface 30 inches above finished floor. Where required, toe space at front of cabinets shall be provided by installing front face of cabinets 3 inches in front of face of base. Where toe space is not required, face of base and cabinets shall be flush. Bases shall have a uniform height of approximately 4 inches.

7. INSTALLATION INSPECTION: The Contracting Officer will inspect the installed items for proper location, fastening, connection to utilities, operation, and damage which may have occurred during installation. Each item shall be put into service to prove proper operation. All defects disclosed during inspection shall be rectified without additional cost to the Government.

8. ITEMS:

Note: The sizes of all casework items identified on the drawings with numbers preceded by the letters "C" and "D" are identified in MIL-C-20709 except for the following specialized items:

(CW-4)

8.1 Item D5520, Module, One Station, Preventive Dentistry:

8.1.1 Dental Casework, preventive dentistry module, single station, each with a 30 inches long by 24 inches wide with 18 gage stainless steel sink 12 inches diameter with single lever faucet, and all trim and fittings. Rear panel above counter, 30 inches wide, 48 inches high, with 4 inch ledge. Duplex outlet mounted in rear panel, combination mirror-light and air syringe with holder. Wall mounted, continuous top on multiple modules.

8.1.2 Include the following:

(a) Sink and fittings.

(b) Electrical outlet box and cover.

(c) Air outlet cover and box; air syringe holder.

(d) Mirror-light unit.

8.1.3 Service Characteristics:

(a) Hot water, 1/2 inch NPT.

(b) Cold water 1/2 inch NPT.

(c) Drain, 1-1/2 inch NPT.

(d) Air, 3/8 inch NPT.

8.1.4 Disposition: Install where indicated on drawings.

8.2 Item D0461, Base, Pedestal:

8.2.1 Prosthetic Dental Casework, base, pedestal, 24-3/4 inches high by 15 inches wide by 42 inches long, dust collector with 1 horsepower blower, 50 foot filter cloth, four 31 inch opening grinding hoods, two removable snap-out panels.

8.2.2 Include the following:

(a) Electric motor, self contained, at least 1 hp (746 watt), to satisfactorily operate on 208 volts, 60 Hz, AC. Provide necessary connection devices.

(b) Filters, 99 percent high efficiency, re-usable (cleanable) type and replaceable without necessity for special tools.

(c) Pressure gage to indicate need for cleaning or filter replacement.

(d) Ductwork from collector unit to hoods, including flexible links, branch connectors and caps.

(e) Starter and controls.

8.2.3 Disposition: Install where indicated on drawings.

8.3 Item D0790, Sink, Stainless Steel, 18 Gage:

8.3.1 Recessed countertop, self rimming sink, stainless steel, 18 gage, 18 inches by 14 inches by 10 inches deep, fitted with plaster trap and mixing faucet and beehive strainer.

8.3.2 Include the following:

(a) Fittings and trim.

(b) Plaster trap (JSN D0830) cast bronze top and rim, one piece, (40 ounce) copper body, 8-1/2 inches in diameter, 11-1/2 inches deep; 1-1/2 inch (pipe) top inlet and drain.

(c) Devices for mounting inside storage cabinet with clearances for cleaning.

8.3.3 Service Characteristics:

(a) Hot water, 1/2 inch NPT

(b) Cold water, 1/2 inch NPT

(c) Drain, 1-1/2 inch NPT

8.3.4 Disposition: Install in casework where indicated on drawings.

8.4 Item D2510, Cabinet, Wall Hung, Glass Doors:

8.4.1 Dental Operatory Casework, cabinet, wall hung, 17-1/4 inches high by 8-1/2 inches deep by 35-1/4 inches long. Sliding glass doors and x-ray film view box built-in.

8.4.2 Disposition: Install where indicated on drawings.

8.5 Item C0061, Cabinet, Wall Hung/Counter:

8.5.1 Pass-Thru Counter with Closed Compartments for transfer of heat sensitive items from Decontamination Area to Clean Work Room and from Clean Work Room to Sterile Work Area. The unit consists of a stainless steel counter at 42 inches above floor with finished front and rear edges; a 30 inch high by 48 inch wide by 16 inch deep cabinet with two sets of hinged double

doors with glass panels mounted on the counter; two sets of hinged double doors, solid, mounted under counter at front and rear edges for rack returns. Entire unit 72 inches high; counter 48 inches wide by 42 inches at open sides; and upper cabinet 16 inches deep by 48 inches wide by 30 inches high; all to conform to details shown on drawings.

8.5.2 Include the following:

(a) Countertop, stainless steel, including front and rear edges; ASTM A167, No. 4 finish.

(b) Chassis, side panels, solid hinged doors, frames for hinged glass doors, top, apron, panel over countertop section fabricated of steel, enameled finish.

(c) Underside of stainless steel counter sound deadened.

(d) Trim and closure strips for installation between two walls and furring at top.

(e) Doors under counter flush with floor at bottom and equipped with snap-in bumpers.

(f) Locks for doors on Decontamination and Sterile Work Area sides.

(g) Furr down from ceiling to top, both walls.

8.5.3 Disposition: Install where indicated on drawings, including trim and closure strips, both wall faces.

8.6 Item C0062, Clean-Up Counter, CRS:

8.6.1 Clean-Up Counter in Decontamination Area for washing, disinfecting and rinsing items that cannot be processed in washer-sterilizers. Unit consists of two sections: one "L" shaped for corner installation and containing five integral sinks, and one "L" section with one integral utility sink. Counter 36 inches wide with 4 inch high backsplash, mounted at 36 inches high. Conform to ASTM A167.

8.6.2 Include the following:

(a) "L" shaped unit consists of top, five sinks and four base cabinets:

Detergent wash sink, 16" x 20" x 10" deep
Tap water rinse sink, 16" x 20" x 10" deep
Drain well, tube rinse, 8" x 10" x 10" deep
Disinfectant soak sink, 8" x 8" x 10" deep
Water rinse sink, 16" x 20" x 10" deep

C04A0 - Cabinet, 36" wide, open, fixed shelves (two units required)
C04P0 - Cabinet, 36" wide, sink type, two doors
C05P0 - Cabinet, 48" wide, sink type, two doors

(b) The second "L" shaped unit section consists of top, one sink and one cabinet (one portion of top 48 inches wide):

Utility sink, 24" x 18" x 12" deep

C05P0 - Cabinet, 48" wide, sink type, two doors

(c) Countertops, backsplash, sinks and legs fabricated of ASTM A167, No. 4 finish stainless steel, welded construction, square corners with roller rims at front and ends.

(d) Manifold and hinges, chromium plated.

(e) Cabinets enameled steel with 4 inch high, 3 inch deep toespace.

(f) Understructure (cabinets) dust- and vermin-proof.

(g) Tubing manifold, mounted behind 8 inch x 10 inch drain well, consists of double row of tapered hose adapters (a total of nine with individual petcocks).

(h) Sound deadened underside of countertops including sinks.

(i) Wrist action handles and gooseneck faucets.

(j) Provide all trim, drains, pipes, traps, valves, etc., required to connect sinks to building stub-outs.

(k) Provide closure panels for each side of cabinets to wall behind.

8.6.3 Service Characteristics:

(a) Hot Water: 1/2 inch NPT (20 to 50 psig).

(b) Cold Water: 1/2 inch NPT (20 to 50 psig).

(c) De-ionized Water: 1/2 inch NPT.

(d) Air: 1/2 inch NPT (60 to 80 psig).

(e) Drain, 1-1/2 inch.

8.6.4 Disposition: Install where indicated on drawings, including closure panels.

8.7 Item C0063, Clean-Up Counter, CRS:

8.7.1 Clean-Up Counter for washing and disinfecting medical equipment in Decontamination Area. Sinks, drainboards, backsplash and tubular legs fabricated from stainless steel. Unit approximately 96 inches long x 29 inches wide and 36 inches high. Conform to ASTM A167.

8.7.2 Include the following:

(a) Welded construction, square corners with roller rims at front and ends; fabricated with ASTM A167 stainless steel, No. 4 finish.

(b) Integral sinks, sound deadened on bottom and backs of bowls and under drainboards.

(c) Integral drainboards pitched to sink.

(d) Three side-by-side sink bowls, each 24 inches long x 18 inches wide x 12 inches deep, centered.

(e) Wrist action handles and gooseneck faucets.

(f) Provide all trim, drains and pipes, valves, traps, etc., required to connect sinks to building stub-outs.

8.7.3 Service Characteristics:

(a) Hot water, 1/2 inch NPT.

(b) Cold water, 1/2 inch NPT.

(c) Drain, 1-1/2 inch.

8.7.4 Disposition: Install where indicated on drawings.

8.8 Item C0064, Worktop, CRS:

8.8.1 Work counter for processing instruments and heat sensitive materials. Unit consists of two sections 29 inches wide with 4 inch high backsplash (coved) and mounted at 36 inches high. Finished end and front edges. Conform to ASTM A167.

8.8.2 Include the following:

(a) One unit 48 inches long with one base cabinet:

C05F0 - Cabinet, 48 inches wide, two doors and two drawers

(b) One unit, 72 inches long with two base cabinets (one installed at each end of top):

C02C0 - Cabinet, 24 inches wide, one door and one drawer

(c) Countertops and backsplash fabricated of stainless steel ASTM A167, No. 4 finish, welded construction, square corners with roller rims at front and ends.

(d) Cabinets, enameled steel with 4 inch high and 3 inch deep toespace.

(e) Understructure (cabinets) dust- and vermin-proof.

(f) Sound deadened underside of countertops.

(g) Provide closure panels for each side of cabinets to wall behind.

8.8.3 Disposition: Install both sections where indicated on drawings, including closure panels.

8.9 Item C0065, Autopsy Work Counter, CRS:

8.9.1 Work and Sink Counter for Autopsy: Unit consists of a stainless steel counter with two integral sinks and undercounter base units. Countertop, 24 inches wide with 4 inch high backsplash, coved. Entire unit 120 inches long with top mounted at 36 inches high. Conform to ASTM A167.

8.9.2 Include the following:

(a) Countertop with two integral sinks, each 16 inches x 16 inches x 10 inches deep.

(b) Countertop, backsplash and sinks fabricated of ASTM A167 stainless steel, No. 4 finish; welded construction, square corners, with roller rim at front and ends.

(c) Three undercounter base units, enameled steel with 4 inch high and 3 inch deep toespace:

C02C0 - Cabinet, 24 inches wide, one drawer and one door
C05P0 - Cabinet, 48 inches wide, sink unit, two doors
C05F0 - Cabinet, 48 inches wide, two drawers, two doors

(d) Understructure (cabinets) dust- and vermin-proof.

(e) Hinges, chromium plated.

(f) Sound deadened underside of countertops including sinks.

(g) Wrist action handles and gooseneck faucets.

(h) Provide all trims, drains, pipes, traps, valves, etc., required to connect sinks to building stub-outs.

(i) Provide closure panels for each cabinet at ends of counter to close to wall behind.

(j) Starter and controls.

8.9.3 Service Characteristics:

(a) Hot Water: 1/2 inch NPT (20 to 50 psig).

(b) Cold Water: 1/2 inch NPT (20 to 50 psig).

(c) Drain, 1-1/2 inch NPT.

(d) 120 volt, 60 Hz, AC, for disposal.

8.9.4 Disposition: Install where indicated on drawings, including closure panels.

8.10 Items C0066, Cabinet, Barium:

8.10.1 Cabinet, undercounter base sink unit, 22 inches deep, 36 inches high, and 24 inches wide, for disposal of barium in X-Ray Procedure Rooms.

8.10.2 Include the following:

(a) Base cabinet unit, C02Q0.

(b) Counter top, CT030, 24 inches deep, 24 inches wide.

(c) Devices for mounting trap inside sink cabinet with clearances for cleaning.

(d) Closure strips on sides of cabinet to wall.

8.10.3 Disposition: Install where indicated on drawings. Refer to section entitled "Plumbing" for specifications for sinks and plaster traps.

8.11 Item C0067, Kitchen, Barium Preparation:

8.11.1 Work Station for Storing and Preparing Barium Solution in Radiology. Unit consists of base cabinets, 22 inches deep, 36 inches high, and 72 inches wide; wall-hung cabinets, 12 inches deep, 30 inches high, and 72 inches wide.

8.11.2 Include the following:

(a) Base cabinet unit, C04P0.

(b) Base cabinet unit, C04E0.

(c) Countertop, D0710, 24 inches deep, 72 inches wide.

(d) Devices for mounting trap inside sink cabinet.

(e) Wall-hung cabinets, CG040, two units.

(f) Trim and closure strips at sides and top for recess mounting of base and wall-hung cabinets.

(g) Wall reinforcing for support of wall-hung cabinets.

8.11.3 Install where indicated on drawings, including trim, closure strips, and wall furring over cabinets. Refer to section entitled "Plumbing" for specifications of sink and plaster trap for this unit.

8.12 Item C0068, Utility Work Station:

8.12.1 Work Station for Processing Soiled Medical Items. Consists of base cabinets, 22 inches deep, 36 inches high, and 72 inches wide.

8.12.2 Include the following:

(a) Base cabinet unit, C04P0.

(b) Base cabinet unit, C04A0.

(c) Countertop, CT030, 24 inches deep and 72 inches wide.

(d) Closure panels on sides of cabinet to wall.

8.12.3 Disposition: Install where indicated on drawings, including closure panels. Refer to section entitled "Plumbing" for specifications of sink for this unit.

8.13 Item C0069, Utility Work Station:

8.13.1 Work Station for Processing Soiled Medical Items. Consists of base cabinet, 22 inches deep, 36 inches high, and 48 inches wide.

8.13.2 Include the following:

(a) Base cabinet unit, C05P0.

(b) Countertop, CT030, 24 inches deep and 48 inches wide.

(c) Closure panels on sides of cabinet to walls.

8.13.3 Disposition: Install where indicated on drawings, including closure panels. Refer to section entitled "Plumbing" for specifications for sink for this unit.

---END---

SECTION 11702. MEDICAL EQUIPMENT, MISCELLANEOUS

1. APPLICABLE PUBLICATIONS: The following publications of the issues listed below, but referred to thereafter by basic designation only, form a part of this specification to the extent indicated by the references thereto:

1.1 Federal Specifications:

S-O-1425	Oven, Microwave, Electric.
FF-D-400	Dispenser, Soap, and Dispenser, Surgical Detergent.

1.2 Military Specifications:

MIL-L-15596E & Am 2	Lock, Combination (Safe and Safe Locker).
MIL-P-82032	Pantry Unit.

1.3 American Society for Testing and Materials (ASTM) Publications:

A167-74	Stainless and Heat-Resisting Chromium-Nickel Steel Plate, Sheet, and Strip.
A568-74	Steel, Carbon and High-strength Low-alloy Hot-rolled Sheet, Hot-rolled Strip, and Cold-rolled Sheet.
B221-76a	Aluminum-Alloy Extruded Bars, Rods, Wire, Shapes, and Tubes.

1.4 National Electrical Manufacturers' Association (NEMA) Publications:

LD-3-1975	High-Pressure Decorative Laminates.

1.5 National Fire Protection Association (NFPA) Publications:

70-1978	National Electrical Code.

1.6 United States Department of Commerce Commercial Standards:

PS 1-74	Construction and Industrial Plywood.

2. RELATED WORK SPECIFIED ELSEWHERE:

2.1 General Requirements: Conform to all provisions of section entitled "General Requirements for Medical Equipment".

"2.2x Service Connections to Equipment: Final utility connections and utility service to equipment under this section including waste shall be provided under sections entitled "Plumbing", "Nonflammable Medical Gas Systems" and "Interior Wiring Systems"."

3. SUBMITTALS: Conform to submittal provisions of section entitled "General Requirements for Medical Equipment".

3.1 Equipment Lists and Manufacturer's Literature: Seven copies of printed specifications and installation requirements for each item shall be submitted to and approved by the Contracting Officer.

3.2 Shop Drawings: Fabrication drawings and installation requirements for items M-3950, M-5542, M-5543, and M-5544 shall be submitted to and approved by the Contracting Officer. Submit five sets of shop drawings for each item. 3.2 Shop Drawings: In second line after "M5544" add "and M-5545" and ME18

3.3 Certificates: Submit for Items M-3950, M-5552, M-2410, L-9710, M-5542, M-5543, M-5544, M-5545, M-5553, M-5546 and M-5547.

"3.3x Certificates: Submit for Items M-3950, M-5552, M-2410, L-9710, M-5542, M-5543, M-5544, M-5545, M-5553, M-5546 and M-5547."

4. MATERIALS: Conform to the specifications referenced herein for each item, with the following exceptions or additions:

4.1 Aluminum Alloy: Equivalent in ultimate tensile, yield and shear strengths to Alloy 6063-T5 or 6063-T6, conforming to ASTM B221.

4.2 Laminated Plastic: NEMA LD-3, colors and patterns as shown on color schedule as selected from manufacturer's standard line.

4.3 Stainless Steel: ASTM A167, Class 201, 202, 301, 302 or 304. Exposed surfaces shall have a satin finish.

4.4 Carbon Steel: ASTM A568, cold rolled sheets, commercial bright finish stretcher level sheets 16 gage and lighter before fabrication.

4 5 Wiring: Electrical wiring, components and devices provided under this section shall conform to applicable provisions of NFPA 70.

5. INSTALLATION: Conform to installation provisions of section entitled "General Requirements for Medical Equipment".

6. FIELD TESTS AND INSPECTIONS:

6.1 Procedures: Perform in accordance with referenced specifications.

6.2 Inspection: Examine each item for visual defects and conformance to specifications.

6.3 Tests: Test each item to insure that the equipment is operational and conforms to specification requirements.

7. ITEMS:

7.1 Item M-3151, Clock, Elapsed Time:

7.1.1 Clock shall be electrically powered digital face, suitable for use in operating rooms; a factory tested unit, complete and ready for installation and connection.

7.1.2 Include the following:

(a) Elapsed time interval displayed in hours and minutes or minutes and seconds as indicated on the drawings.

(b) Flush mounted.

(c) Instantaneous reset.

(d) Time display in arabic numerals.

(e) Finishes:

(1) Case: Enameled metal, or CRS.

(2) Face and Numeral Colors: Manufacturer's standard.

(3) Second Indicator Numerals: 3 inches high, minimum.

(4) Minute Indicator Numerals: 3 inches high, minimum.

(5) Hour Indicator Numerals: 3 inches high, minimum.

(f) Control panel, 6 inches square, for installation in a double gang switch box, completely wired and assembled, including the following:

(1) Indicator light that illuminates when timer is on.

(2) Indicator light that illuminates when timer is in reset mode.

(3) Switch, start-stop.

(4) Switch, reset.

7.1.3 Disposition: Install where indicated on drawings.

7.2 Item M-3950, Ophthalmic Examining System:

7.2.1 Examining system for examining and ophthalmic refracting. The system is comprised of three main components: the wall panel, the control panel, and the instrument hanger panel. The base cabinet unit contains the control console (counter mounted), the instrument hanger rack, and a recessed stainless steel sink. Provide diversatronics "Auto System", Model EX-1081 cabinet unit and wall panel.

7.2.2 Include the following:

(a) Wall panel, prewired and connected to the main console by umbical cord; 24 inches wide, 42 inches high, 2-1/4 inches deep; high fixation light, eye level muscle light, worth four dot test, and an animated animal. Exposed parts covered with plastic laminate except for aluminum projector screen.

(b) Base cabinet unit consisting of cabinets and counter top mounted at 30 inches high; 62 inches long and 18 inches deep connected at one end to the instrument control storage cabinet which shall be 19 inches wide, 18 inches deep, and 39-3/4 inches high, with single hinged door. Base cabinet under counter top is 36 inches wide and 18 inches deep, one section 18 inches wide with single hinged door and other section 18 inches wide containing three 6-inch deep drawers. Provide one 24-inch wide drawer under counter top at knee space. Cover all exposed parts with plastic laminate.

(c) Stainless steel sink, recess mounted in counter top, 14 inches by 14 inches by 6-1/4 inches deep; complete with gooseneck spout, soap dispenser, wrist action handles and all trim, traps, drains, valves, pipe necessary to connect to building utility stub-outs.

(d) Counter mounted main control console, 36-1/2 inches long, 9-3/4 inches high, and 9-5/8 inches deep; brush aluminum finish; ten self-illuminated buttons to control the activity projector, reading light and various fixation lights and targets; a manual override; silver contact relays.

(e) A separate adjustable solid-state dimmer connected to master control.

(f) Each instrument connected to the separate hanger panel with individual rheostat for adjustable voltages.

(g) Swing-out panel, 6 inches thick, and covered with plastic laminate on all faces, mounted inside the large storage cabinet. Panel to contain instrument control panel, separate hanger for ophthalmoscope and instruments.

(h) Electronic instrument control system with sequenced automatic switching and adjusting of instrument lighting, room lighting and dimming, fixation light; prewired by manufacturer. Dimmer for room lighting and dimming shall have a 1600 watt rating.

(i) Prewired panel connected to main console by a single umbilical cord.

(j) Service Characteristics:

(a) Dimmer for room lighting and dimming shall have a 1600 watt rating.

(b) 120 Volt AC and Instrumentation Wiring: Wiring shall be in accordance with section entitled "Interior Wiring Systems" for wiring and electrical work required.

(c) Hot and cold water, 1/2" NPT, each.

(d) Drain, 1-1/2" NPT.

7.2.3 Disposition: Install cabinet, remote wall panels, conduit, recessed boxes and wiring where indicated on drawings.

7.3 Item M-3850, Dispenser, Surgical Soap:

7.3.1 Assembly shall be a foot operated, wall mounted dispenser, suitable for dispensing liquid surgical soap, Type I, conforming to Federal Specification FF-D-400.

7.3.2 Include the following:

(a) Dispensing tube assembly, stainless steel, with drip-proof nozzle and adjustable needle valve.

(b) Foot pedal pump, with flexible air tubing.

(c) Jar, removable, one quart capacity, polyethylene.

7.3.3 Disposition: Wall mount above scrub sinks and 6 inches to right of centerline of each Plumbing Item P-18 indicated on drawings.

ME-04 7.4 Item M-5250, Medicine Service Center, 48 Inches Wide:

7.4.1 Medicine Service Center shall be self-contained station, suitable for storing, preparing and dispensing medicines; approximately 21 inches wide (front to back) by 48 inches long (across face) by 80 inches high. Front surface of unit in one plane, allowing it to be recessed. Provide unit completely assembled, requiring only one service connection for each utility.

7.4.2 Include the following:

(a) Construction: Fabricate as an integral unit with exposed to view metal cabinet surfaces, both interior and exterior, of satin finished stainless steel. Welding shall be heliarc process with precautions taken to insure non-corrosive condition. Exposed welds and edges, including inside cabinets, shall be ground smooth and polished to match finish. Countertop shall be full width of cabinet, with raised rim edge and integral sink. Provide removable access panel on back wall of utility compartment under sink for access to service connections. Assembly shall permit servicing from front without disassembling unit.

(b) Sink: Stainless steel, at least 16 gauge thick, approximately 9-1/2 inches x 11-1/2 inches x 6 inches deep, equipped with waste strainer and tailpiece.

(c) Faucet: Hot and cold water fittings with indexed wrist handles and gooseneck faucet.

(d) Illumination: Provide a recessed fluorescent lighting fixture with bulbs and translucent diffusing shield. Locate switch in splash area on countertop.

(e) Outlets: Provide a 115 volt, grounded duplex electrical outlet, located in splash area above countertop, accessible without reaching over sink.

(f) Storage Shelves: Provide stepped shelves directly over countertop.

(g) Door: Double pan hinged door at storage cabinets.

(h) Drawer: Stainless steel construction, with double pan front. Drawer suitable for storage of syringe kits, removable, extend fully on ball bearings, slides, and provided with key lock.

(i) 24 hour medicine card rack.

(j) Medicine Cup Dispenser and Waste Container: For disposable 1-ounce medicine cups. Provide opening for disposal of used paper cups into a removable waste container concealed in lower cabinets. Provide waste container.

(k) Narcotics Cabinet: Locate in upper section of cabinet, provide with one pair of successive locking doors, each door requiring a separate key. Insertion of key in outer lock shall automatically light a red warning signal that will remain on until locker is secured and both keys are removed.

(l) Refrigerator: Insulated, lighted, self-defrosting, biological type, at last 4.5 cubic foot capacity. Provide with 3 adjustable, moisture-proof shelves designed to allow air circulation. Door to include gaskets, latch and key lock. Interior surfaces of stainless steel.

(m) Security Door: Provide a roll type security door with lock to enclose medicine shelves.

(n) Trim: Provide for each recessed unit, suitable to enclose edges between unit and surrounding enclosure.

(o) Exhaust grille, for wall mount over unit.

(p) Keys: Provide at least 2 keys for each lock on unit. Key all units separately.

(q) Service Characteristics:

(1) Hot and Cold Water: 1/2 inch.

(2) Waste: 1-1/2 inch.

(3) Electrical: 120 volt, 60 Hz, AC.

7.4.3 Disposition: Install where indicated on drawings. Furr down from ceiling to top of unit.

ME-05 7.5 Item M-5552, Pantry Unit, Single Oven:

7.5.1 Pantry shall be a prefabricated unit, consisting of one integral assembly conforming to MIL-P-82032, except as otherwise specified. Overall dimensions approximately 84 inches wide x 30 inches deep x 80 inches high. Provide completely assembled, requiring only one final service connection for each utility.

7.5.2 Include the following:

(a) Construction: Fabricate assembly to permit servicing of each component from front, without disassembling unit.

(b) Fittings: Gooseneck faucet with cross handle controls, indexed for hot and cold water.

(c) Disposal: With built-in reset breaker switch.

(d) Microwave Ovens: Provide one, conforming to S-O-1425, with push-button timers. Clear chamber dimensions of approximately 13 inches across face x 7 inches high x 13 inches wide (front to back). Mount units above counter, removable for servicing without special tools and providing at least 15-1/2 inches clearance above countertop.

(e) Coffee Maker: Built-in, electric powered unit, automatic drip-filter type, with 60 cup per hour capacity, complete with heat resistant brewing cone and at least 9 cup capacity coffee carafe.

(f) Refrigerator: Undercounter unit, including frozen food storage compartment, tray slide with two removable shelves, and air cooled compressor.

(g) Ice Maker: Granular ice type, mounted over counter at sink area, capacity of at least 350 pounds per day with 60 pound storage bin and air cooled compressor.

(h) Cook Top: Electric type, counter mounted, with controls accessible without reaching over burners.

(i) Electrical Convenience Outlets: Grounded, located above counter in backsplash, accessible without reaching over sink or cook top.

(j) Exhaust grille, for wall mount over unit.

(k) Trim: Provide for each recessed unit, suitable to enclose edges between unit and surrounding enclosure.

(l) Accessories: Provide soap dispenser, paper towel dispenser, paper cup dispenser, and tilt out removable waste receptor.

(m) Shielding: Microwave oven suitable for installation in medical institutions and fully shielded to prevent interference with cardiac pacemakers. Certification of proper shielding required.

(n) Service Characteristics:

(1) Hot and Cold Water: 1/2 inch.

(2) Waste: 1-1/2 inch.

(3) Electrical: 120/208 volt, 60 Hz, three phase, four wire, AC.

7.5.3 Disposition: Install where indicated on drawings. Furr down from ceiling to top of unit and install exhaust grille.

7.6 Item L-9710, Table, Autopsy:

7.6.1 Autopsy table shall be trough shaped design, approximately 100 inches long x 30 inches wide x 36 inches high.

7.6.2 Include the following:

(a) General Construction: Fabricate of stainless steel, all joints welded and polished smooth, exposed surfaces with a satin finish, outer edges rounded and interior corners coved to approximately 3/8 inch radius.

(b) Table Top:

(1) One-piece construction. 14 gauge stainless steel, with raised rim edge.

(2) Top surface sloped to drain and provided with a removable strainer.

(3) Top edge of table graduated in centimeters.

(c) Sink: Single compartment, 12 inches x 20 inches x 11 inches deep, corners coved, provided with knee operated drain control, overflow, hot and cold water mixing valve with wrist blades and gooseneck faucet.

(1) Locate faucet between working area of table and sink, or to one side of sink. Faucet on outer end of table not acceptable.

(2) Manifold sink waste and waste from table, requiring only one waste connection.

(d) Base Frame: Tubular legs and braces, with adjustable bullet feet. Intersection of legs and braces welded and polished smooth. Sharp edges not acceptable.

(e) Aspirator assembly, water powered, with control valve, built-in vacuum breaker, serrated nozzle outlet, 8 feet of flexible hose, and suction bottle.

(f) Irrigation assembly, dual controlled hot and cold water flow, regulated by both a quick opening knee operated valve or standard hand control valve, provide with serrated nozzle outlet, at least 8 feet of flexible hose and nozzled end piece.

(g) Head rest, removable, rubber.

(h) Body slats, not less than 6 inches wide. Provide at least 5 for each table.

(i) Instrument tray, with removable rubber cutting board.

(j) Perimeter table flushing system, with control valve and vacuum breaker.

(k) Electrical duplex outlet, 3 wire, 120 volt, 60 Hz, AC.

(l) Waste disposal, 1/2 hp, with switch and solenoid valve, 120 volts, 60 Hz, AC.

7.6.3 Disposition: Install where indicated on drawings.

7.7 Item M-2410, IV Additive Station:

7.7.1 Station for preparation of intravenous fluids consisting of two laminar flow table top modules mounted on movable metal table units.

7.7.2 Include the following:

(a) One laminar flow hood module, 24 inches deep by 30 inches high by 48 inches wide and one laminar flow hood module, 24 inches deep by 30 inches high by 72 inches wide. Provide movable metal table with four lockable casters for each hood module. Table shall be hood manufacturer's standard movable table, sized to accommodate specific hood sizes.

(b) Units constructed of polyurethane, painted; 18 gauge aluminum with clear acrylic top and sides.

(c) Horizontal type units with solid state controls to adjust air velocity from 35 to 125 ft/min.

(d) Filters, HEPA, Fed. Std. 209A, Class A, certified at 99.97% efficiency.

(e) Overload protected blower/motor to provide 100 + 10 ft/min. and automatically compensate for HEPA filter loading to 1.6 static pressure.

(f) Final filter guard serving as a diffuser to maintain 7 ft/min air flow differential over entire area.

(g) Plastic laminate covered 1-5/16 inch thick particle board work surfaces.

(h) Accessories: 20 pore polyurethane foam prefilter, 3/8 inch diameter CRS IV support mounted horizontally 3 inches from the top and 8 inches from the rear of the cabinet, switch for blower and lights, built-in fluorescent light and a 3 prong ground type plug and cord (each module).

(i) Service Characteristics: 120 volt, AC, 60 Hz., 1 phase, 9 amps, (each module).

7.7.3 Disposition: Install where indicated on drawings.

7.8 Item M-5542, Patient-Care Multi-Wall Unit: ME-9

7.8.1 "Unit shall be hand as indicated and shall consist of manufacturer's standard prefabricated modular consoles and modules integrated into a unified assembly mounted on wall surface with overall dimensions of approximately 8 feet 11-1/2 inches wide by 7 feet 3 inches high by 6 inches deep and containing the following medical service modules with accessories: an electrical/lighting/bed module, and a medical gas module with recessed bottle storage compartment." ~~ient cabinet module,~~ Basic structural framing shall be heavy gage extruded 6063-T5 aluminum alloy with caustic etch. All exposed aluminum shall have clear anodized finish. Wall panels shall be removable and fabricated of 3/8 inch thick fire retardant particleboard with exposed face surface of 1/32 inch thick laminated plastic, colors shall be in accordance with the color schedule. Backing sheet of .22 inch thick laminated

plastic panels shall have extruded aluminum edge banding with snap-in vinyl strip to facilitate installing and removing the panels. Consoles and modules shall be arranged as indicated. Unit shall abutt ceiling at top to receive concealed utilities required.

7.8.2 Console units shall be prefabricated all metal construction, pre-punched as required, complete with factory installed accessories such as electrical outlets, switches, relays, dimmers, timers, gas outlets and the like. Console sub and back boxes shall be 16 gauge galvanized steel with barriers betwen high and low voltage items. Console fronts shall be anodized aluminum with black detail inserts.

7.8.3 Include the following:

(a) Multi-wall unit shall be prewired to include all necessary conduit, junction boxes, and central gang box with terminal block ready for connection by the electrical trade. All conduits shall be properly marked for section assembly and connection on job site.

(b) Equip patient cabinet module with devices to attach bedside cabinet at a future time.

(c) Elapsed digital time clock with minute/second numerals, with start/stop/reset controls in upper electrical console. Mount clock on proper panel. Provide auxiliary contacts that shall start clock when Code Blue switch is depressed.

(d) Sphygmomanometer shall be wall mounted, aneroid type, 6-1/2 inch diameter face, brown with white numerals, non glare case, shatterproof crystal, swivel type, with 6 foot long permanently coiled self-retracting latex tube, latex bulb and cuff and holder with self-adhering nylon hook closure. Mount on proper module panel.

(e) Intensive care monitoring console shall have space for monitoring outlets, ground outlets, 120 volt hospital outlets, and cardiac monitor shelf, 60 pounds capacity. Locations and quantities as indicated on the drawings.

(f) Upper intensive care electrical console top section with provisions for ceiling exam light timer night light, nurses call panel, (7-gang outlet box minimum required), stop/start/reset switch for elapsed time clock; bottom section with blank space, line isolation monitors, circuit breaker, grounded receptacle, and 120 volt hospital outlet.

(g) Module below upper electrical console shall have space for isolation transformer and components specified under section entitled "Electrical Systems for Critical Care and Inhalation Anesthetizing Locations".

(h) Lower electrical console with external grounding receptacles, blank spaces and 120 volt hospital receptacles.

(i) Vacuum slides and recessed vacuum bottle storage unit.

(j) Patient bed light shall be a 36" nominal 4 lamp fluorescent unit. Housing shall be 20 gauge steel with cast aluminum end plates. Housing shall incorporate a compartmented wireway, ballast housing and internal baffle to separate up and down component lamps. Shielding for up lamps shall be a linear prism acrylic diffuser. Shielding for down lamps shall be a 20 gauge matte black, low brightness baffle assembly. Lamps shall be controlled by a 4 position pull chain switch to permit (1) up light only (2) down light only (3) lamps off (4) all lamps on. Ballasts shall be selected, low leakage type for operation from an isolated power system. Luminaire trim shall be walnut vinyl woodgrain.

(k) Internal space for and access to an isolating transformer.

(l) Console gas outlets shall be fitted with "DISS" connections and shall be located and arranged as shown on the drawings.

(m) Consoles, for electrical services, nurses call and special fittings shall be arranged as indicated on the drawings.

(n) Isolated Power System and Equipotential Grounding: Refer to section entitled "Electrical Systems for Critical Care and Inhalation Anesthetizing Locations" for the requirements for isolated power systems and equipotential grounding.

(o) Wiring Devices: Refer to section entitled "Interior Wiring Systems" for wiring devices.

(p) Exam Light Timers: Refer to section entitled "Interior Wiring Systems" for exam light timers.

(q) Service Characteristics:

(1) 7-1/2 KVA 277 Volt - 1Ø primary - 120 volt - 1Ø secondary

(1) Change "7-1/2 KVA" to "5KVA".

(2) Air: 1/2 inch

(3) Vacuum: 1/2 inch

(4) Oxygen: 1/2 inch

(5) Medical gas outlets pre-manifolded, silver brazing alloy and type "K" medical copper pipe, in accordance with NFPA standards.

7.8.4 Disposition: Install where indicated on drawings.

ME-10

7.9 Item M-5543, Patient-Care Multi-Wall Unit (Without Patient Cabinet Module); overall approximate dimensions of 5 feet 3-1/2 inches wide by 7 feet 3 inches high by 4 inches deep.

7.9 Item M-5543, Patient-Care Multi-Wall Unit (Without Patient Cabinet Module): In the third line change "4" to "6".

7.9.1 Unit shall be same as specified for Item M-5542, except for the following:

(a) Patient cabinet module shall be omitted.

(b) Gas evacuation outlets shall be included on units where indicated on the drawings.

ME-11

7.10 Item M-5544, Patient-Care Multi-Wall Unit:

7.10.1 Unit shall consist of manufacturer's standard prefabricated modular consoles and modules. Unit consists of one module provided in two separate sections for full recessing below work counter and in wall above counter. Lower section 2 feet 0-1/2 inches wide by 3 feet 3 inches high by 4 inches deep with trim for fully recessing below work counter; upper section 2 feet 0-1/2 inches wide by 4 feet 0 inches high by 4 inches deep with trim for fully recessing in wall above work counter. Lower section contains medical and electrical services with space for isolation transformer. Basic structural framing shall be heavy gage extruded 6063-T5 aluminum alloy with caustic etch. All exposed aluminum shall have clear anodized finish. Wall panels shall be removable and fabricated of 3/8 inch thick fire retardant particle-board with exposed face surface of 1/32 inch thick laminated plastic; colors shall be in accordance with color schedule. Backing sheet of .22 inch thick laminated plastic panels shall have extruded aluminum edge banding with snap-in vinyl strip to facilitate installing and removing the panels. Consoles shall be arranged as indicated. 7.10.1 In the fourth line change "4" to "6".

7.10.2 Console units shall be prefabricated all metal construction, pre-punched as required, complete with factory installed accessories such as electrical outlets, switches, relays, dimmers, timers, gas outlets and the like. Console sub and back boxes shall be 16 gauge galvanized steel with barriers between high and low voltage items. Console fronts shall be anodized aluminum with black detail inserts.

7.10.3 Include the following:

(a) Multi-wall unit shall be prewired to include all necessary conduit, junction boxes, and central gang box with terminal block ready for connection by the electrical trade. All conduits shall be properly marked for section assembly connection on job site.

(b) Elapsed digital time clock with minute/second numerals, with start/stop/reset controls in upper electrical console. Mount clock on proper panel. Provide auxiliary contacts that shall start clock when Code Blue switch is depressed.

(c) Sphygmomanometer shall be wall mounted, aneroid type, 6-1/2 inch diameter face, brown with white numerals, non glare case, shatterproof crystal, swivel type, with 6 foot long permanently coiled self-retracting

latex tube, latex bulb and cuff and holder with self-adhering nylon hook closure. Mount on upper panel module.

(d) Intensive care monitoring console shall have space for monitoring outlets, ground outlet, 110 volt hospital outlets, and cardiac monitor shelf, 60 pound capacity; locations and quantities as indicated on drawings.

(e) Lower section of module shall contain electrical and medical gas outlets: oxygen outlets, air outlets, vacuum outlets, gas outlets shall be fitted with "DISS" connections, external grounding outlets, blank spaces and 110 volt hospital outlets.

(f) Provide vacuum slides in lower unit.

(g) Provide space in lower unit for safe isolating transformer and components specified under section entitled "Electrical Systems for Critical Care and Inhalation Anesthetizing Locations".

(h) Provide console in upper section for light switches, start/stop/reset switch for elapsed time clock, blank space, line isolation monitor hazard indicator, circuit breaker, grounded receptacles and 110 volt hospital outlet.

(i) Service Characteristics:

"(1) Electrical: 5KVA 277 Volt - 1Ø primary - 120 Volt - 1Ø secondary."

(2) Air: 1/2 inch

(3) Oxygen: 1/2 inch

(4) Vacuum: 1/2 inch

(5) Medical gas outlets pre-manifolded, silver brazing alloy and type "K" medical copper pipe, in accordance with NFPA standards.

7.10.4 Disposition: Install where indicated on drawings. Connect electrical services, instrumentation and medical gases to building stubouts.

7.11 Item M-8000, Track, I.V.:

7.11.1 Unit shall be extruded aluminum track, surface mounted, of configurations and length dimensions indicated. Unit shall support adjustable bottle support carriage assembly to travel to the complete track length. Track and all component parts produced by single manufacturer.

7.11.2 Provide the following:

(a) Track, heavy gauge anodized aluminum of special channel shape; predrilled straight and radius sections.

(b) Provide appropriate splice members to assure smooth uninterrupted travel of the roller carriage.

(c) Carriage shall have 4 wheels requiring no lubrication and these shall be fabricated of moulded reinforced fiberglass.

(d) Provide spring loaded mechanism to create slight friction between the carriage and track to permit easy positive positioning of the pendant.

(e) The carriage and pendant shall be electrically nonconductive.

(f) Pendant port shall be removable hollow extruded aluminum shape with nonconductive nylon coating containing an internal telescoping rod.

(g) Pendant length adjustable by means of a nylon pull cord with a reinforced fiberglass handle/lock, threaded through the pendant and telescope rod attached to a 4 hook I.V. bottle holder.

(h) I.V. bottle holder fabricated of moulded reinforced fiberglass and shall have 4 adjustable hooks suitable for wire bale bottles or plastic solution packages.

(i) Each hook shall have a serrated edge to maintain hook in selected position.

(j) Refer to drawings for locations and ceiling heights for required proper pendant assembly lengths.

(k) Furnish one completely assembled carriage/pendant assembly at each track or loop.

7.11.3 Disposition: Install track to finished ceiling, securely anchored to suspension system above ceiling. Install tracks in locations and configurations indicated on reflected ceiling plans.

7.12 Omitted.

7.13 Item M-1660, Exerciser, Wheel, Shoulder:

7.13.1 Shoulder Wheel Exerciser shall be 40 inch diameter wall mounted type on bracket adjustable 30 inches for height of wheel and have roller bearings with resistance adjustment mechanism. Handle shall protrude minimum of 7-1/2 inches from wheel to avoid interference from center of knob of wheel,

and be adjustable for arc of 10 inches to 48 inches. Unit shall be a prefabricated and prefinished standard item of iron and solid hardwood, and shall include all hardware features required.

7.13.2 Disposition: Install unit on wall surface where indicated at height noted.

7.14 Item M-1580, Exerciser, Ladder:

7.14.1 Shoulder Exerciser shall be a standard manufactured item of hardwood, prefabricated and prefinished, approximately 2-1/2 inches wide by 1-1/2 inches thick, with 40 precut finger steps.

7.14.2 Disposition: Mount on wall surface where indicated at height noted.

7.15 Item M-1951, Pulley, Triplex:

7.15.1 Pulley assembly shall be a standard manufactured item and shall be a wall, floor and ceiling mounted system of pulleys, weights and cords. All parts prefabricated and prefinished.

7.15.2 Include the following:

(a) All mounting hardware, trim and accessories required for installation.

(b) Two handles, hardwood, at chest level; two handles, hardwood, suspended from the ceiling; and two handles mounted at floor level.

(c) 24 105. of adjustable weights, manufacturer's standard.

7.15.3 Disposition: Install where indicated on drawings.

PE-04 7.16 Item M-5553, Kitchen, Compact:

7.16.1 Unit shall be a standard, recessed model, prefabricated manufactured item approximately 39 inches wide, 26 inches deep (front to back), and 81 inches high, consisting of a base section with a built-in electric refrigerator, a counter with integral sink bowl, and a storage compartment with door; and upper storage cabinet with a pair of doors and light fixture in the bottom soffit. Unit body, shelves and doors shall be fabricated of zinc coated bonderized sheet steel minimum 22 gage, with all exposed surfaces of acid resisting porcelain enamel finish, manufacturer's standard color as shown in color schedule. Countertop, integral sink and backsplash shall be constructed of stainless steel. Conform to ASTM A 167, ASTM A 568 and NFPA 70.

7.16.2 Include the following:

(b) Cook top.....Immediately following the word "elements" insert "and oven".

7.16.2 Include the following:

(a) Refrigerator shall have insulated walls and door, approximately 6 cubic feet storage capacity, stainless steel freezer section with two ice trays, gasketed door, slide or roll-out metal grid shelves, and door controlled light. Refrigerator unit shall be air-cooled type, hermetically sealed condenser. Sink shall be complete with trim, fittings, drain and piping.

(b) Cook top elements are not required.

(c) Provide all trim and closure strips for recess mounting, top and sides.

(d) Countertop shall be stainless steel, one piece with integral drop bowl sink, approximately 12 inches by 18 inches by 6-1/2 inches deep, serving spout, hot and cold controls, 3-1/2 inch drain and crumb cup strainer. Provide chromium plated "P" trap. Conform to ASTM A-167, No. 4 finish.

(e) Service Characteristics:

(1) 3/8 inch cold and hot water

(2) 2 inch waste

(3) 120 volt, 60 Hz, AC

7.16.3 Disposition: Install where indicated on drawings, including closure strips. Furr down from ceiling to top of unit. Connect electrical service, plumbing drain, hot and cold water to building stubouts.

7.17 Item M-5546, Bumper, Bed Locator:

7.17.1 Bumper, Bed Locator, for patient bedrooms to protect walls against damage; approximately 48 inches long.

7.17.2 Include the following:

(a) High impact, extruded construction.

(b) End sections, projecting approximately 3 inches from wall.

(c) Mounting hardware and accessories.

7.17.3 Disposition: Install where indicated on drawings.

7.18 Item M-7960, Track, Cubicle Curtain:

7.18.1 Track shall be standard manufacturer's item of extruded aluminum box channel shape, approximately 3/4 inch high and 1-3/8 inches wide, slotted to receive number 11 guides on number 12 rollers, with satin anodized finish. Units shall be furnished in one continuous piece and corner ends shall have a minimum radius of 12 inches. Provide extruded slip-on connectors and hinged end-stops as required. Track shall be suitable for installation direct to finished ceiling.

7.18.2 Include the following:

(a) Provide number 12 nylon rollers and axles with stainless steel beaded chain and rustproof aluminum hooks of sufficient number not to exceed a maximum of 6 inches spacing of track length.

7.18.3 Disposition: Install tracks to finished ceiling, securely anchored to suspension system above ceiling. Install tracks in locations and in configurations as indicated on the reflected ceiling plans.

7.19 Item M-8600, Cabinet, Warming, Blanket and Solution: Delete entire paragraph and substitute the following in lieu thereof:

"7.19x Omitted."

"7.20 Item M-5545, Patient-Care, Power Column: Column shall provide 360° access to the bed, with centralized services. The unit shall be approximately 21-3/4 inches wide, 6-7/8 inches deep (including shrouds and bases depth is 26 inches) and height as indicated. Columns shall be Underwriters' Laboratories listed construction. Furnish Underwriters' Laboratories file numbers with quotations. Column shall be complete with structural frame, access panels, service chases, electrical outlets, switches and components, wiring and grounding, medical gas outlets, provisions for nurse call, provisions for code blue, provisions for monitoring and other components and accessories as indicated. Coordinate to insure column compatibility with all related equipment. Provide primary services and make connections to appropriate preinstalled mechanical equipment of the column as indicated and as specified. Furnish and install column and related equipment, associated wiring, conduit and equipment, and make necessary connections as indicated and as specified. The recommendation of the National Fire Protection Association (NFPA), the National Electrical Code (NEC), the state and local codes that apply to this installation shall be adhered to in all respects. Contractor shall be responsible for compliance with all local, state and federal codes applicable to this installation. At point of manufacture, examine and test each unit for proper calibration, functioning and compliance with specification requirements. Such inspections as are set forth in this specification or as shall otherwise be appropriate or necessary to insure that the equipment conforms to specification requirements shall be performed.

7.20.1 Materials and Construction:

7.20.1.1 Column Frame Members: Construct column frame members of heat treated aluminum alloy extrusion. Exposed aluminum surfaces shall be clear anodized. Vertical and horizontal service chases shall be assembled together to form the column structure. The column structure shall be covered by service panels and plastic snap-in covers.

7.20.1.2 Service Panels: Construct service panels of 3/8 inch thick particle board material, with a plastic laminate backing and high pressure

7.19.3 Disposition: Install where indicated on drawings.

---END---

plastic laminate facing sheet. Concealed mounting hardware shall hold panel in place and provide easy access to interior of module.

7.20.1.3 Plastic Laminate: Nevamar high pressure laminate. Colors as indicated.

7.20.1.4 Horizontal Service Chase: Assemble horizontal service chase of heat treated aluminum alloy extrusion. Face shall be punched on 2-1/4 inch centers as required to accept equipment and barriers per job requirements; shall be covered by service panels. Top and bottom members shall be punched to accept conduit per service requirements of the job.

7.20.1.5 Vertical Service Chase: Assemble vertical service chase of heat treated aluminum alloy extrusion. Sides shall be punched on 6 inch centers as required to accept equipment and barriers for a 2 gang device or 2 single gang devices per job requirements; extrusions shall accept snap-in plastic covers. Inside member shall be punched to accept conduit per service requirements of job.

7.20.1.6 Snap-In Covers: Snap-in covers shall be extruded plastic piece designed to fit into vertical members. Cover shall have gang openings prepunched on 6 inch centers as required for vertical service chases as indicated and shall be flush with module surface.

7.20.1.7 Rear Service Enclosure Shroud: Rear service enclosure shroud shall be steel laminated with high pressure plastic laminate. Mounted to the module, extending from the unit and to the ceiling, concealing service connections and housing panel display lighting, with a 1/4 inch reveal finished in black mounted to top of shroud. Shall be attached to the unit with screws furnished.

7.20.1.8 Rear Waste Receptacle Unit: Rear waste receptacle unit shall be steel laminated with high pressure plastic laminate. Mounted to the module, concealing plastic disposable bags or other acceptable variations furnished by hospital. Shall be attached to the unit with screws furnished.

7.20.1.9 Fixed Shelf: Construct fixed shelf of 3/8 inch thick particle board material with a plastic laminate backing and high pressure plastic facing sheet; edged with a plastic trim strip. Shelf, with mounting hardware, shall be fixed in place approximately 40 inches off floor.

7.20.1.10 Front Service Enclosure Shroud: Front service enclosure shroud shall be steel laminated with high pressure plastic laminate. Mounted to the module, extending from the unit and to the ceiling, concealing service connections and ceiling access hole, with 1/4 inch reveal finished in black mounted to top of shroud and attached to the unit with screws.

7.20.1.11 Equipment and Light Shroud: Equipment and light shroud shall be steel laminated with high pressure plastic laminate. Mounted to and extending from the front of module containing service equipment and panel

display lighting. Edged with a rubber protective bumper. Mount shroud to the unit with screws.

7.20.1.12 Front and Rear Bottle Stand Bases: Basic frames shall be constructed of wood. A formed plastic bottle stand shall be mounted to the top of each to accept 2 bottles on both front and rear bases. Bases shall be anchored in place, concealing structural base platform. A 6 inch base shoe rubber molding shall be furnished and glued in place, concealing all base structure.

7.20.1.13 Adjustable Protective Bumpering: Construct adjustable protective bumpers of 3/16 inch thick steel, formed and powder coated. Mounted to front of unit, protecting module and service equipment accessories from damage by bed and other secondary equipment used in conjunction with the patient. The bumpers shall be adjustable and locked in position without the use of fasteners.

7.20.1.14 Structural Plaster Ring: Construct frame of 14 gauge steel, welded into rigid structure. Mounted to ceiling by suspension brackets tied to building structure. Column shall be tied to plaster ring by mounting bolts.

7.20.1.15 Structural Base Platform: Construct frame of 11 gauge steel, welded into rigid structure. Two adjustable platforms shall mount to structural frame. Column shall rest on platform and be adjustable by 2 inches for variation in ceiling height. Frame shall be anchored to floor with screws and bolts.

7.20.1.16 Floor Bed Positioner: Floor bed positioner shall be a one piece bed positioning device; front ramped with angular sides to allow docking of one front bed caster to assure proper bed and column relationship as per manufacturer's installation instructions. Positioner shall also allow bed to be pivoted in an arc from front caster of bed without losing its relationship to the column.

7.20.1.17 Main Junction Box: Each module shall contain a junction box at top of column for connection of incoming electrical services; barriered into compartments, electrical, communications (low voltage) and emergency power, as required. In sections of the junction box will be located terminal blocks. Preinstalled electrical equipment shall be prewired to junction box.

7.20.1.18 Grounding and Bonding: See Section 16492.

7.20.1.19 Device Cover Plates: Device cover plates shall be made of formed aluminum clad material. Plates shall cover devices or empty gang openings.

7.20.1.20 Chart Light: Chart light shall be switched SP-ST, 7 watt, 120 volt, light to provide light for reading records and other tasks in a darkened room without disturbing the patient. This is accomplished by louvers directed downward. Lamps furnished.

7.20.1.21 Night Light: Night light shall be switched SP-ST as indicated, 7 watt, 120 volt, light to provide low level floor illumination to help guide patient and nursing in a darkened room. This is accomplished by louvers directed downward and located in sides of column. Lamps furnished.

7.20.1.22 Sphygmomanometer (Aneroid Type): Aneroid has a 6" dial mounted on a swivel bracket which permits viewing from several angles. Unit shall include complete velcro cuff and inflation system with an 8 foot coiled tubing, cuff storage facility, all fittings and mounting hardware.

7.20.1.23 Vacuum Bottle Slide Bracket: Vacuum bottle slide bracket shall be a 4 inch, one-piece formed stainless device with a stop located on the bottom. Slide shall accept any manufacturer's vacuum bottle slide. Brackets to be installed on column as indicated.

7.20.1.24 Vertical Galley Storage: Vertical galley storage shall accept airways, tubing and other nursing elements necessary for emergency procedure - shall be peg board coated with a high gloss finish and with 8 wire formed hooks with a plated finish. Board shall be preinstalled to panel as indicated and hooks shall be field installed.

7.20.1.25 Electrical Receptacles: See Sections 16402 and 16492.

7.20.1.26 Ground Receptacles: See Sections 16402 and 16492.

7.20.1.27 Switches and Switching Arrangements: See Sections 16402 and 16492.

7.20.1.28 Transducer Leads Compartment: Transducer leads compartment shall conceal patient lead connectors on the face of monitor. Routing of leads shall be through an internal raceway in the column; located behind the monitor and routed out side or front at bed height.

7.20.1.29 Front Panel Display Lighting: Lighting shall be switched from side of column, SP-ST, (2) 25 watt incandescent, 120 volt, lights to provide panel display lighting of services located on front of column. Lamps supplied.

7.20.1.30 Rear Panel Display Lighting: Lighting shall be switched from side of column, SP-ST, (2) 25 watt incandescent, 120 volt, lights to provide panel display light over services located on rear of column. Lamps supplied.

7.20.1.31 Telephone: Telephone shall be in a barriered section of a vertical service chase with 1/2 inch conduit extending 6 feet above finished

floor to service access area of unit. Face plate shall be provided and punched for grommeted hole.

7.20.1.32 Code Blue Emergency Call Button: Provide cable connection from elapsed time clock to the code blue pushbuttons in the column. Provide adequate space and make provision for pushbutton. Include conduit to accommodate code blue cabling to junction box of column.

7.20.1.33 Nurse Call Station: Provide adequate space and make provisions for nurse call and furnish matching faceplates to nurse call manufacturer to insure esthetic compatibility. Include conduit to accommodate nurse call. Provide pull wire to upper junction box of module.

7.20.1.34 Elapsed Time Indicator: Provide a digital elapsed time clock capable of timing in minutes and seconds. The unit shall be capable of being stopped and restarted without being reset. The digital display shall be a minimum of 1" high. The clock shall be operated by start/stop and reset controls. The clock start switch shall also be connected to the code blue auxiliary contacts to start clock when the code blue button is depressed. Resetting of the code blue button shall not effect the elapsed time clock.

7.20.1.35 Medical Gas Outlets: Medical gas outlets shall be specified under Division 15. Furnish, preinstall, and manifold the medical gas outlets. These outlets shall have matching face plates with pin indexing into matching, keyed slots to preclude mixing. They shall be self-sealing, and have service identification by color-coded latch insignia. Gas outlets shall be located as indicated. Secondary valves and face plates shall be shipped loose to be field installed. Silver brazing alloy (melting point 1000 degrees F. or higher) and type "K" precleaned, medical copper pipe shall be used. The oxygen and compressed air shall have 3/8 inch O.D. piping. The vacuum outlets shall be commonly manifolded with 1/2 inch O.D. piping. All brazing of copper tubing shall be done with silver bronzing alloy (melting point 1000 degrees F.). Pressure testing shall be at 150 PSI to insure adequate bonding at brazed connection. Provide connections to the premanifolded outlets in the medical gas access area of column. Perform and certify all pressure tests as required by NFPA 56F.

7.20.1.36 Physiological Monitoring Equipment: All monitoring equipment will be Government provided. Allow adequate space and make provisions for monitoring equipment, support as required for monitor barriers and matching faceplates, to insure esthetic compatibility for monitor jacks and shall include conduit to accommodate monitor wire pulls to upper junction box of the module. Location as indicated.

7.20.1.37 Tilt/Swivel Monitor Support Bracket: Shall allow for universal mounting of monitor equipment. Bracket arm shall be 1" x 2" aluminum tubing, 12" long, etched and anodized with injection molded plastic channel slide. Arm shall incorporate variable tilt head assembly of solid machined aluminum with clean anodized finish that tilts down from horizontal plane 0-3-degrees by effortlessly adjusting 2 inch diameter knurled knob. Swivel plate

attached to the tilt head allowing monitor to swivel horizontally, shall be supplied with appropriate hardware for mounting monitor to plate. Monitor unit may also be rotated horizontally in either direction while a level plane is maintained at all times. Arm shall be field mounted. Assembly shall include one mounting plate of anodized aluminum, designed to be fastened to and support monitor, and tilt/swivel bracket slide of clear aluminum that shall be preinstalled to column for vertical height adjustment of tilt/swivel bracket. Shelf shall be compatible with monitor selected.

7.20.1.38 Blank Opening: Blank shall be a single gang opening covered with steel plated cover plate, cover by snap-in plastic cover. Snap-in cover plate will be punched as future devices are added. Cover plate shall cover devices or empty gang openings.

7.20.1.39 Isolation Transformers: See Section 16492.

7.20.1.40 Line Isolation Monitor (LIM): See Section 16492.

7.20.1.41 Circuit Breakers: See Section 16492.

7.20.1.42 Standard Wiring: See Sections 16402 and 16492.

7.20.1.43 Isolation Power Wiring: See Section 16492.

7.20.1.44 Timer Switch: See Section 16402.

7.20.2 Installation: Hang each column from the ceiling by plaster mounting ring tied to upper structure of building, install and anchor base to bottom of column, make adjustment taking up to ±2 inches of variation in ceiling heights as per manufacturer's installation instructions. Contractor shall furnish and install conduit and wire to connect column to building services as indicated and as herein specified. All connections to the wall system shall be made to prewired junction box provided by the column manufacturer. Provide primary connectors to the pre-manifolded outlets in the access area of column, as indicated. Perform and certify all pressure tests as required by NFPA 56F. After installation of equipment has been completed, check out entire installation for proper operation and remove all fingerprints and smudges from all exposed surfaces with a clean damp cloth. See Section 16492 for electrical certification and testing. After installation, equipment shall be examined and sufficiently tested under operating conditions to determine that each component of the assembly has been installed correctly and will function properly. If inspection shows defects, such defects shall be corrected, defective material replaced, and inspection repeated as necessary. Such repairs shall be made with new materials.

~~SECTION 11730. WASHING EQUIPMENT~~

~~3. SUBMITTALS:~~ See reverse side for 7.21 thru 7.21.5

7. ITEMS: At the end of this paragraph add the following:

"7.21 Item ME 18, Patient Service Console

Amend #3 Void

7.21.1 Patient console shall be a single galvanized steel recessing back box having separate compartments for vacuum, oxygen, air, 120 volt grounding type hospital receptacles, chart lights, future nurse call, and vacuum slides.

7.21.2 Faceplate shall be a single multi-gang cover of extruded brushed anodized aluminum or struck-up satin finish stainless steel having cutouts for services as specified.

7.21.3 Console shall be factory-assembled and pre-wired (except for vacuum, oxygen, and chart lights) and shall be provided with miniature hookup terminal blocks with screw terminals and barriers.

7.21.4 Console shall be flush wall mounted and shall be provided as indicated.

7.21.5 120 Volt AC and Instrumentation Wiring: Wiring shall be in accordance with section entitled "Interior Wiring Systems" for wiring and electrical work required."

SECTION 11704. LABORATORY EQUIPMENT AND FUMEHOODS

1. APPLICABLE PUBLICATIONS: The following publications of the issues listed below, but referred to hereafter by basic designation only, form a part of this specification to the extent indicated by references thereto:

1.1 Federal Specifications:

CC-M-1807	Motor Alternating Current, Fractional and Integral Horsepower (500 hp and Smaller).
WW-P-541/7B	Plumbing Fixtures (Shower Bath and Heads, and Water Control Valves, Land Use).
TT-S-00227E & Am 3	Sealing Compound, Elastomeric Type, Two Component.

1.2 American Society for Testing and Materials (ASTM) Publications:

A167-74	Stainless and Heat-Resisting Chromium-Nickel Steel Plate, Sheet, and Strip.
A568-74	Steel, Carbon and High-Strength Low-Alloy Hot-Rolled Sheet, Hot-Rolled Strip, and Cold-Rolled Sheet, General Requirements.
B88-76	Seamless Copper Water Tube.
B127-74	Nickel-Copper Alloy (UNS N04400) Plate, Sheet and Strip.
B135-74	Seamless Brass Tube.
B163-74	Seamless Nickel and Nickel Alloy Condenser and Heat-Exchanger Tubes.
B164-75	Nickel-Copper Alloy Rod and Bar.
B165-75	Nickel-Copper Alloy (UNS N04400) Seamless Pipe and Tube.
B584-77	Copper Alloy Sand Castings for General Applications.

1.3 Military Specifications:

MIL-C-20709C	Casework, Metal and Wood.

1.4 National Electrical Manufacturers' Association (NEMA) Publications:

LD-3-1975	High-Pressure Decorative Laminates.

1.5 National Fire Protection Association (NFPA) Publications:

70-1978	National Electrical Code.

1.6 United States Department of Commerce Product Standards:

PS 1-74	Construction and Industrial Plywood.

2. RELATED WORK SPECIFIED ELSEWHERE:

2.1 General Requirements: Conform to all provisions of section entitled "General Requirements for Medical Equipment".

"2.2x Service Connections to Equipment: Final utility connections to equipment under this section including waste shall be provided under section entitled "Plumbing", "Nonflammable Medical Gas Systems", "Gas Piping", and "Interior Wiring Systems". Refer to Electrical, Mechanical, Instrumentation and Plumbing Drawings."

3. SUBMITTALS: Conform to submittal provisions of section entitled "General Requirements for Medical Equipment" including the following.

3.1 Equipment Lists and Manufacturer's Literature: Seven copies of printed specifications and installation requirements for each item shall be submitted to and approved by the Contracting Officer.

3.2 Shop Drawings: Detail drawings for utility connections for items L-2336, L-2200, L-2325; fabrication and installation drawings for items L-2337 and L-2510 shall be submitted to and approved by the Contracting Officer. Submit five sets of shop drawings for each item.

3.3 Certificates: Submit for Items X-9300, L-2200, L-2325, L-2330, L-2336, L-2337, L-2510 and P-5210.

4. MATERIALS AND COMPONENTS:

4.1 Stainless Steel: ASTM A167, except as otherwise specified, Class 301, 302 or 304. Exposed surfaces shall have a No. 4 finish.

4.2 Aluminum Alloy: At least equivalent in ultimate tensile, yield and shear strengths to Alloy 6063-T5 or 6063-T6, as applicable, conforming to ASTM B221.

4.3 Carbon Steel: ASTM A568, cold rolled sheets, commercial bright finish stretcher level sheets 16 gauge and lighter before fabrication.

4.4 Wiring: Electrical wiring, components and devices provided under this section shall conform to applicable provisions of NFPA 70.

4.5 Fasteners: Rivets, bolts, nuts, studs, spacers and metals used for welding shall be same kind of metal as material being fastened or of a metal that will not react to cause corrosion. Where corrosion resistant metals are joined to each other or to other metals, rivets, bolts, and material used for welding shall be corrosion resistant metal.

4.6 Pipe and Tubing: Seamless annealed and ground smooth. Welded tubing shall be thoroughly heat treated and properly quenched to eliminate carbide precipitation, drawn true to size and roundness. Water and waste lines: ASTM B88 or ASTM B135, Alloy 1.

4.7 Solder: All piping for gases shall be welded with silver solder.

5. INSTALLATION: Conform to installation provisions of section entitled "General Requirements for Medical Equipment".

6. FIELD TESTS AND INSPECTIONS:

6.1 Inspections: Examine each item for visual defects and conformance to specifications.

6.2 Tests: Test each item to insure that the equipment is operational and conforms to specification requirements.

7. ITEMS:

7.1 Item X-9300, Glove Box, Radioisotope:

7.1.1 Radioisotope Glove Box for Nuclear Medicine Laboratory procedures, 36 inches wide, 29 inches deep and 36 inches high. Conform to Federal Specification CC-M-1807 and NFPA 70.

7.1.2 Include the following:

(a) Box constructed of moulded seamless polyester resins reinforced with glass fiber; polylaminated, one piece unit; nonporous surfaces, chemical resistant, fire retardant and sterilizable.

(b) One piece safety glass window, 16 inches high, 31 inches long and 1/4 inch thick.

(c) Two double grooved glove ports.

(d) Two outlet filters, each to remove 99.97 percent of all particles .3 microns and larger in size, mounted under the canopy with motor, blower and connecting hoses.

(e) Powerstat knob providing infinite speed control from 0 - 75 cfm or up to three full air changes per minute. Multiple orifice intakes and exhaust manifolds to eliminate turbulence.

(f) Manometer; mount on front of box to indicate air flow.

(g) Three 120 volt, hospital grade, safety type, electrical outlets and indicating switches.

(h) One 24 inch light with fixtures mounted outside the box, and indicating switch.

(i) 115 volt, 1/25 HP variable speed motor and blower with 40 inch long flexible spiral exhaust tubing, 2 inch diameter, with clamps.

(j) One pair of neoprene gloves with two glove clamps.

(k) 96 inch long, 3 wire, cord and plug.

(l) Mobile understructure, open leg; 35 inches wide, 23 inches deep and 33-1/2 inches high; constructed of 16 gage steel, finished with black epoxy resin, 1 inch thick wood subtop; four ball bearing, toe operated lock casters.

7.1.3 Service Characteristics:

(a) Lead lined exhaust duct and collar for 2 inch diameter tubing.

(b) Electrical: 115 volt, 60 Hz, AC for 1/25 HP motor and outlets.

7.1.4 Disposition: Install where indicated on drawings.

7.2 Item L-2336, Fumehood, Microbiology:

7.2.1 Fumehood, Microbiology, for isolation of procedures working with inoculation, plate streaking and mycology. Complete with base cabinet, superstructure, hood dome and blower. Approximate dimensions 47 inches wide by 31 inches deep by 96 inches high; explosion-proof assembly including base and blower. Conform to Federal Specification CC-M-1807; ASTM A568, ASTM B88, ASTM B135; Military Specification MIL-C-20709; and NFPA 70.

7.2.2 Include the following:

(a) 316 type stainless steel lining.

(b) By-pass feature, 100 percent closed door exhaust.

(c) Superstructure, dome and by-pass grille.

(d) 200 lb. capacity stainless steel work top, 316.

(e) Pyrex cup sink, remote c. w. handle, pipes, traps and fittings, corrosion resistant.

(f) 25 watt germicidal lamp, activated when unit is not in use.

(g) Base unit, explosion-proof, baked enamel finish.

(h) Electric service panels, exterior side, explosion-proof.

(i) All service fixtures; air, vacuum, gas and cold water, remote control.

(j) Motor, blowers and fume exhauster, 3/4 HP motor, explosion-proof.

(k) Two stage exhaust filter for trapping 99.95 percent of radioactive particles in 0.3 to 0.5 micron range.

(l) Coved, welded seamless corners, interior.

(m) Prefabricated pipe inside work chamber to wash back wall, and hose connection.

(n) Stainless steel duct to connect unit to building exhaust system.

(o) All parts accessible for washdown.

7.2.3 Service Characteristics:

(a) 10 inch lead lined duct and collar, exhaust direct.

(b) 3/4 HP blower, 125 fpm face velocity, 2 inch static in hood, 5/8 inch static in duct, total cfm 1562.

(c) 115 volt, 1 phase, 60 Hz, 6.8/3.4 amps.

(d) Explosion-proof: Blowers and integral electrical outlets and devices.

(e) Cold water, air and vacuum.

(f) Drain to separate holding pit.

7.2.4 Disposition: Install where indicated on drawings.

7.3 Item L-2330, Fumehood, Glove Box, Bacteriology:

7.3.1 Glove Box Fumehood, fiberglass, approximately 36 inches wide by 29 inches deep by 36 inches high with mobile bench, 35 inches wide, 23 inches deep and 33-1/2 inches high, open leg with casters. Conform to Federal Specification CC-M-1807 and NFPA 70.

7.3.2 Include the following:

(a) Box constructed of moulded, seamless, polyester resins reinforced with glass fiber, polylaminated, one piece unit; nonporous surface, chemical resistant, fire retardant and sterilizable.

(b) Mobile understructure; constructed of 16 gage steel, finished with black epoxy resin; 1 inch thick wood subtop; four ball bearing, toe operated lock casters.

(c) Two filters, one polyurethane inlet filter media and one exhaust filter for 99.95 percent removal of all particles over 0.3 microns.

(d) Crack-free, one piece moulded box, interior.

(e) Powerstat knob for blower speed control.

(f) 1/25 hp variable speed motor and blower.

(g) Multiple orifice intake and exhaust manifolds.

(h) 40 inch long by 2 inch diameter flexible spiral exhaust tubing.

(i) Safety glass window, 16 inches by 31 inches, 1/4 inch thick.

(j) Two 8 inch double grooved glove ports.

(k) One pair of neoprene gloves and two glove clamps.

(l) Manometer to indicate air flow.

(m) Ultraviolet light fixture and safety switch.

(n) 8 foot long, 3 wire electric cord and plug.

(o) Three 120 volt hospital grade, safety type electrical outlets with indicating switches.

(p) 24 inch fluorescent light with fixture.

(q) All service fixtures and fittings.

7.3.3 Service Characteristics:

(a) Exhaust duct and collar for 2 inch diameter tubing.

(b) Electrical: 115 volt, 60 Hz, AC for 1/25 HP motor and outlets.

7.3.4 Disposition: Install where indicated on drawings.

7.4 Item L-2200, Fumehood Assembly:

7.4.1 Fumehood Assembly, general purpose, closed front with base unit and blower, approximate size 47 inches wide by 24-1/2 inches deep by 106-3/4 inches high. Conform to Federal Specification CC-M-1807; ASTM A568, ASTM B88, ASTM B135; Military Specification MIL-C-20709; and NFPA 70.

7.4.2 Include the following:

(a) Base cabinet unit, metal, baked enamel.

(b) Resin work top, epoxy, one piece.

(c) Superstructure containing work chamber, 16 gage.

(d) Dome, containing air intake grille and connection to the exhaust duct.

(e) Blower unit - exhaust motor, 3/4 hp with magnetic starter.

(f) Lining and Baffles: 1/4 inch thick Asbestocite, finish with baked enamel, chemical resistant.

(g) Counterbalanced sash, steel frame, 1/4 inch thick safety glass panel.

(h) Explosion-proof incandescent lamp in work chamber.

(i) Separate electrical service panel, base cabinet, front; 115 and 208 volt outlets, switch and power light for blower.

(j) Exhaust collar, 10 inches diameter, stainless steel and stainless steel duct to connect to building exhaust system.

(k) Deflector chamber with baffles.

(l) Adjustable upper and back panel in hood.

(m) Deflector vane, 1 inch, exterior, front and bottom of work top across width of hood.

(n) Front control services, chrome-plated knobs mounted at the sides of the face opening.

(o) Pyrex cup sink, faucet, remote handle, pipes, traps and fittings, chemical resistant.

(p) One each, gas, air, vacuum cocks and service fixture.

(q) Air delivery at 1 inch static: 1060 cfm.

7.4.3 Service Characteristics:

(a) Services for cold water, drain, gas, air and vacuum.

(b) Electrical Requirements: 115 volts, 1 phase, 60 Hz, AC for 3/4 HP motor and blower; 115 volts to base unit.

7.4.4 Disposition: Install where indicated on drawings.

7.5 Item L-2325, Gross Pathology Station:

7.5.1 Gross Pathology Station, complete self contained unit for gross pathology dissecting, consisting of three sections: A sectioning sink, a waste sink, and an updraft unit for exhausting fumes. Approximately 59-5/16 inches wide by 30 inches deep by 67 inches high. Conform to Federal Specification CC-M-1807; ASTM A167, ASTM A568, ASTM B165; and NFPA 70.

7.5.2 Include the following:

(a) Station constructed to resist corrosion and chemicals.

(b) Updraft unit, sink basins and top deck constructed of 18 gauge 304 stainless steel.

(c) Supporting casework, heavy gage, prime grade steel with baked enamel finish.

(d) Sectioning sink with foot pedal controlled gooseneck faucet (16 inches wide by 28 inches long by 2 inches deep sloping to 3 inches).

(e) Waste sink with faucet and automatic 1/2 HP waste disposal (16 inches wide by 18 inches long by 10 inches deep); disposal switch.

(f) Blower unit with exposed perforated panel into updraft unit, variable speed motor/blower, switched, exhaust motor, 3/4 HP with magnetic starter.

(g) 6 inch by 12 inch stainless steel top duct collar.

(h) 6 inch by 12 inch by 5 foot long stainless steel duct to connect collar to exhaust system above ceiling.

(i) Charcoal filter, removable, with access panel.

(j) Fluorescent light covered with milk white Plexiglas panel.

(k) Service panel, apron mount, with switches for light, disposer, and blower.

(l) Base cabinet unit under work counter, sink type with one swinging door.

(m) Stainless steel duct to connect unit with building exhaust system.

7.5.3 Service Characteristics:

(a) Cold water and 1-1/2 inch IPS drain and connection.

(b) 120 volt, 60 Hz, 1 phase, AC for 1/2 HP disposal and for motor/blower.

(c) 6 inch by 12 inch exhaust duct.

7.5.4 Disposition: Install where indicated on drawings.

7.6 Item L-2337, Hood, Exhaust, Ceiling Mounted:

7.6.1 Exhaust Hood, for removal of odors at urinalysis work station in Pathological Laboratory, ceiling mounted, approximately 24 inches deep by 48 inches long with 8 inch deep apron down from finish ceiling on four sides. Interior slopes to 10 inch diameter exhaust duct collar in center. Conform to ASTM A167; and NFPA 70.

7.6.2 Include the following (see details on drawings):

(a) Stainless steel duct connecting collar to building exhaust system serving the laboratory.

(b) Hood, aprons, housing, duct collar, all constructed of stainless steel, Class 302.

(c) CRS Grille, filter and trim as required.

7.6.3 Disposition: Install, ceiling mounted, recessed, in Pathological Laboratory where indicated on drawings.

7.7 Item L-2510, Incubator, Walk-In Room, Lab:

7.7.1 Controlled Environment Room, walk-in, for laboratory procedures, bacteriology media; incubation applications; sensitivity ± 5 degrees C; temperature range ambient to 60 degrees C; approximately 54 inches wide, 78 inches deep and 93 inches high, completely self contained unit, 168 cubic foot capacity. Conform to Federal Specification CC-M-1807; ASTM A568; and NFPA 70.

7.7.2 Include the following:

(a) Enamel steel exterior parts and door.

(b) Aluminum interior, 3 inch wool insulation around entire unit.

(c) Enamel steel closure panel for front face; extend from top of unit to finish ceiling.

(d) Temperature and humidity control panel, solid state panel.

(e) Manufacturer's standard floor and finish, aluminum.

(f) Ventilation chambers without internal ducts or louvers.

(g) Observation window in door, 12 inches by 12 inches.

(h) Prefabricated panel construction.

(i) Interior fluorescent lighting and exhaust fans.

(j) Unit completely prewired.

(k) Twelve shelves, 48 inches wide by 19 inches deep; and six shelves, 48 inches wide by 20 inches deep; aluminum.

(l) Chamber size, 48 inches wide, 72 inches deep and 84 inches high.

(m) Dual thermostats.

7.7.3 Service Characteristics:

(a) Electrical: 115 volts, 60 Hz, AC, 1900 watts.

7.7.4 Disposition: Install unit where indicated on drawings and place closure panel over front face of unit.

7.8 Item L-2192, Air Purifier:

7.8.1 Air Purifier for odors generated in the Morgue, 28 inches by 7 inches by 6 inches.

7.8.2 Include the following:

(a) Ceiling mounted units.

(b) Capacity: 10,000 cubic feet.

(c) Services: 120 volts, 60 Hz, AC, 50 watts.

7.8.3 Disposition: Install where indicated on drawings.

---END---

SECTION 11705. LABORATORY, MORGUE, MEDICAL AND PHARMACY REFRIGERATORS AND ICE MAKERS

1. APPLICABLE PUBLICATIONS: The following publications of the issues listed below, but referred to thereafter by basic designation only, form a part of this specification to the extent indicated by the references thereto:

1.1 Federal Specifications:

AA-R-200E	Refrigerator, Mechanical, Commercial Self-contained, Reach-in and Pass-Through.
CC-M-1807	Motors, Alternating Current, Fractional and Integral Horsepower (500 hp and Smaller).

1.2 Military Specifications:

MIL-R-10932L	Refrigerator, Prefabricated, Panel Type.
MIL-R-40633B	Refrigeration Units, Mechanical (Remote Type) for Refrigerator, Prefabricated, Panel Type (Post, Camp and Station Use).

1.3 American Society for Testing and Materials (ASTM) Publications:

A167-74	Stainless and Heat-Resisting Chromium-Nickel Steel Plate, Sheet, and Strip.
A568-74	Carbon and High-Strength Low-Alloy Hot-Rolled Sheet, Hot-Rolled Strip, and Cold-Rolled Sheet, General Requirements.
B221-76a	Aluminum-Alloy Extruded Bars, Rods, Wire Shapes, and Tubes.

1.4 National Fire Protection Association (NFPA) Publications:

70-1978	National Electrical Code.

1.5 Standards for Blood Banks and Transfusion Services:

Fifth Edition, 1970 Revised.

2. RELATED WORK SPECIFIED ELSEWHERE:

2.1 General Requirements: Conform to all provisions of section entitled "General Requirements for Medical Equipment".

2.2 Service Connections to Equipment: Final utility connections to equipment under this section including waste shall be provided under sections entitled "Plumbing" and "Interior Wiring Systems".

3. SUBMITTALS: Conform to submittal provisions of section entitled "General Requirements for Medical Equipment" including the following:

3.1 Equipment Lists and Manufacturer's Literature: Seven copies of printed specifications and installation requirements for each item shall be submitted to and approved by the Contracting Officer.

3.2 Shop Drawings: Fabrication and installation drawings for item R-8101 shall be submitted to and approved by the Contracting Officer. Submit five sets of shop drawings for each item.

3.3 Samples: Submit wall panel sample and finish material for Item R-8101.

3.4 Certificates: Submit for all motors and compressors, and for Items R-5200, R-6000, R-4650, R-6081, R-8101, R-8400, R-8405 and R-4651.

4. MATERIALS AND COMPONENTS:

4.1 Stainless Steel: ASTM A167, except as otherwise specified, Class 301, 302 or 304. Exposed surfaces shall have a No. 4 finish.

4.2 Aluminum Alloy: At least equivalent in ultimate tensile, yield and shear strengths to Alloy 6063-T5 or 6063-T6, as applicable, conforming to ASTM B221.

4.3 Carbon Steel: ASTM A568, cold rolled sheets, commercial bright finish stretcher level sheets 16 gauge and lighter before fabrication.

4.4 Wiring: Electrical wiring, components and devices provided under this section shall conform to applicable provisions of NFPA 70.

5. INSTALLATION: Conform to installation provisions of Section entitled "General Requirements for Medical Equipment".

6. FIELD TESTS AND INSPECTIONS:

6.1 Inspection: Examine each item for visual defects and conformance to specifications.

6.2 Tests: Test each item to insure that the equipment is operational and conforms to specification requirements.

7. ITEMS:

7.1 Item R-4650, Icemaker, Flaked, Dispenser:

7.1.1 Icemaker, Flaked, Dispenser for medical ice use in Obstetrics Department and Surgical Recovery Room; approximately 36 inches wide by 28 inches deep by 85 inches high with legs. Conform to Military Specifications MIL-R-10932 and MIL-R-40633.

7.1.2 Include the following:

(a) Completely automatic operation.

(b) 650 pound daily capacity.

(c) 100 pound capacity storage bin, stainless steel.

(d) Exterior, stainless steel construction.

(e) Water station.

(f) Compressor, heavy duty, 1/2 HP, air cooled.

7.1.3 Service Characteristics:

(a) 3/8 inch water inlet, 1/2 inch overflow drain.

(b) 115 volts, 60 Hz, 1 phase, AC.

7.1.4 Disposition: Install where indicated on drawings. Furr down from ceiling to top of unit.

7.2 Item R-8400, Refrigerator, Pass-Thru, Wall:

7.2.1 Refrigerator, floor mounted, thru-wall, pass-thru, 40 cubic feet. Cooler storage for intravenous bottle storage; approximately 57 inches wide by 32 inches deep by 63-3/4 inches high. Conform to Federal Specification AA-R-200.

7.2.2 Include the following:

(a) Exterior front, rear, sides and top, 20 gauge stainless steel.

(b) Interior 20 gauge 2B stainless steel.

(c) Blower-coil cooling system, automatic defrost, stainless steel front grille access; built-in evaporator.

(d) Six stainless steel adjustable shelves.

(e) Two full width, 8 inch deep, stainless steel drawers.

(f) Four doors, glass, triple pane, cloud-proof; each with lock.

(g) Temperature monitoring system.

(h) Interior lights with door switches.

(i) Condensing unit, 3/4 hp, hermetically sealed, 115 volts, 60 Hz, AC, 12.9 amps.

(j) Trim and closure strips for sealing of openings on sides and top, both wall faces.

7.2.3 Disposition: Install where indicated on the drawings. Install all wall closure strips and trim.

7.3 Item R-8405, Refrigerator, Pass-Thru, Wall. Conform to Federal Specification AA-R-200.

7.3.1 Refrigerator, wall mounted over counter, pass-thru, 6.6 cubic foot capacity, for holding specimens between public areas and Pathology Laboratory; approximately 54 inches wide by 13 inches deep by 30 inches high.

7.3.2 Include the following:

(a) Exterior front, rear, top, bottom and sides, 20 gauge stainless steel.

(b) Interior 20 gauge 2B stainless steel.

(c) Four stainless steel doors, each with locks and gaskets (two doors on Laboratory side glass with 3 panes and cloud-proof).

(d) Four stainless steel shelves, adjustable.

(e) Temperature monitoring system.

(f) Side mount condensing unit with removable stainless steel grille (on Laboratory side).

(g) Blower-coil cooling unit with automatic off-cycle defrost, and condensate evaporator.

(h) 1/5 hp condensing unit, 115 volts, 60 Hz, AC, 2.7 amps.

(i) Trim and closure strips for sealing of opening on bottom, top, and sides on both wall faces.

7.3.3 Disposition: Contractor to install where indicated on drawings. Mount bottom of unit 47 inches above finish floor and reinforce stud wall under refrigerator for firm support. Install wall closure strips and trim.

7.4 Item R-5200, Freezer, Counter High, -70 Degrees Centigrade:

7.4.1 Freezer for Laboratories, counter high, 4.6 cubic foot capacity; approximately 24 inches wide by 24 inches deep by 34-1/2 inches high. For temperature range to -70 degrees Centigrade. Conform to Military Specifications MIL-R-10932 and MIL-R-40633.

7.4.2 Include the following:

(a) Interior finish and front, including door, 20 gauge 2B stainless steel; top, back and sides 20 gauge galvanized steel, finished.

(b) Countertop, stainless steel.

(c) Audio-visual alarm system; connect system to the hospital communications center.

(d) Temperature recorder - 7 day chart.

(e) Two stainless steel shelves, adjustable; dished bottom floor.

(f) 2 inch thick minimum insulation for -70 degrees C. temperature requirement.

(g) Stainless steel door, gasketed and with lock.

(h) Condensing unit, hermetically sealed, capable of producing temperature range to -70 degrees C. Removable stainless steel front grille for service.

(i) Blower-coil with automatic timer, electric defrost and condensate evaporator.

(j) Electrical characteristics: 115 volts, 60 Hz, AC.

7.4.3 Disposition: Install where indicated on drawings.

7.5 Item R-6000, Refrigerator, Blood Bank:

7.5.1 Refrigerator, blood bank, for controlled storage of blood in Laboratory and Surgical Suite, 15.1 cubic foot capacity; approximately 33 inches diameter by 72 inches high. Conform to the Standards for Blood Banks and Transfusion Services.

7.5.2 Include the following:

(a) Interior, 22 gauge bonderized steel with white enamel finish.

(b) Exterior, sides 20 gauge bonderized steel with ripple finish; top, acrylic, moulded.

(c) Bottom compressor with removable stainless steel grille for service.

(d) Four revolving shelves and one stationary shelf, stainless steel, adjustable.

(e) Factory set, dual automatic temperature controls, for range of 2 degrees to 4 degrees Centigrade.

(f) Audio-visual monitor for temperature.

(g) Glass door with lock, triple pane, cloud-proof.

(h) Neon lighting for interior.

(i) Blower-coil cooling system with automatic off-cycle defrost.

(j) Chrome-plated hardware.

(k) 3 inch thick fiberglass insulation.

(l) Audio-visual alarm system; connect each unit to the hospital communications center.

(m) 5/8 inch rubber tube drain.

(n) Recording thermometer - 7 day chart.

(o) 1/4 hp condensing unit, hermetic, 115 volts, 60 Hz, 1 phase, 5.0 amp.

7.5.3 Disposition: Install where indicated on drawings.

7.6 Item R-6081, Refrigerator, Biological/Pharmacy:

7.6.1 Refrigerator, biological, walk-in, reach-in, for Laboratory and Pharmacy, 100 cubic foot capacity, built-in thru-wall unit; approximately 60 inches wide by 92 inches deep by 101 inches high. Conform to Military Specifications MIL-R-10932 and MIL-R-40633.

7.6.2 Include the following:

(a) Interior and shelves and drawers, 20 gauge stainless steel.

(b) Exterior, two exposed sides, including doors, 20 gauge stainless steel; other sides and top, 20 gauge paint grip steel with one coat paint.

(c) Audio-visual monitor.

(d) Recording thermometer - 7 day chart.

(e) Interior lights with door switches.

(f) Stainless steel doors, gasketed, and each with lock.

(g) Hardware: Chrome plated brass.

(h) 4 inch polystyrene insulation throughout.

(i) Two reach-in doors, each 1 foot 10 inches by 5 feet 5 inches.

(j) Four stainless steel shelves, 18 inches by 24 inches, adjustable.

(k) Stainless steel drawers with perforated bottoms: Four 8 inches x 18 inches x 24 inches; six 6 inches x 18 inches x 24 inches; six 4 inches x 18 inches, x 24 inches; pull-out type.

(l) Anti-sweat device at reach-in doors.

(m) 3/4 hp condensing unit, 208 volts, 60 Hz, 1 phase, AC; removable stainless steel grille for service.

(n) 1/2 hp cooling unit.

(o) External switch and light, walk-in compartment.

(p) 115 volts, 60 Hz, 1 phase, AC for lights, cooling unit, audio-visual monitor and anti-sweat device.

(q) Trim and closure strips for wall openings and tops.

7.6.3 Disposition: Install where indicated on drawings, including all closure and trim strips.

7.7 Item R-8101, Refrigerator, Mortuary, Prefabricated:

7.7.1 Refrigerator, prefabricated components, walk-in room for cadaver storage on stretchers; remote water cooled compressor. See drawings for outside dimensions and details. Conform to Military Specification MIL-R-10932 and MIL-R-40633.

7.7.2 Include the following:

(a) Exterior, .042 inch thick stucco embossed aluminum, except front and door finished in 20 gauge stainless steel.

(b) Interior, .042 inch thick stucco embossed aluminum; floor, 14 gauge galvanized steel.

(c) Panels with cam-action interlocking joints, activated from inside. Door, infitting, flush mounted type. Provide matching exterior panels, removable, extending from top of box to ceiling.

(d) Insulation, 4 inch thick rigid urethane throughout with k factor not to exceed 0.14.

(e) Audio-Visual temperature alarm system; connect system to the hospital communications center.

(f) Hardware, polished satin finish aluminum including self closing hinges, nylon bearings, interior safety latch and door lock on exterior.

(g) Thermoplastic door gasket with magnetic steel core mounted on three edges.

(h) Adjustable rubber wiper gasket, door bottom.

(i) Concealed heaters on all four sides of door jamb.

(j) Flush type dial thermometer, front of cabinet.

(k) Floor and insulation for recessed installation.

(l) Incandescent lighting, vapor-proof, exterior switch and pilot light.

(m) Automatic temperature recorder.

(n) Floor drain, 3 inch NPT for automatic trap primer.

(o) Compressor, remote installation, water cooled; 1 hp, 208/220 volts, 60 Hz, 3 phase, AC.

(p) Trim and scribe strips for wall closure.

7.7.3 Disposition: Install where indicated on drawings. Contractor note 4 inch deep recessed floor slab for flush finish floor in room. Install removable panels from ceilings to top of unit.

7.8 Item R-4651, Icemaker, Cubed, with Bin:

7.8.1 Unit consists of icemaker with integral storage bin for cubed ice for medical use in Emergency Department. Cuber approximately 48 inches wide by 23 inches deep by 28-3/4 inches high mounted on storage bin approximately 48 inches wide by 30-1/2 inches deep by 39 inches high (with legs). Conform to MIL-R-10932 and MIL-R-40633.

7.8.2 Include the following:

(a) Exterior Construction: Stainless steel cuber unit and hinged stainless steel bin door. Heavy gauge steel bin body with baked enamel finish.

(b) Interior of storage bin; stainless steel.

(c) Complete automatic controls and operation.

(d) Icemaker for medium size cubes.

(e) 525 pounds of ice per 24 hours.

(f) Bin storage capacity of 550 pounds.

(g) Air cooled condensing unit, 1 hp.

(h) Service Characteristics:

(a) 120/208 Volt, 60 Hz, 1 phase, 9.9 amps.

(b) 3/8" NPT, cold water, flair inlet.

(c) 5/8" OD drain, cuber; 1/2" drain, bin.

Disposition: Install where indicated on drawings.

---END---

SECTION 11713. SURGICAL LIGHTING FIXTURES

1. APPLICABLE PUBLICATIONS: The following publications of the issues listed below, but referred to thereafter by basic designation only, form a part of this specification to extent indicated by the references thereto:

1.1 American Society for Testing and Materials (ASTM) Publications:

A53-76	Pipe, Steel, Black and Hot-Dipped, Zinc-Coated Welded and Seamless.
A366-72	Steel, Carbon, Cold-Rolled Sheet, Commercial Quality.
A512-66 (1976)	Cold-Drawn Buttweld Carbon Steel Mechanical Tubing.
A513-76	Electric-Resistance-Welded Carbon and Alloy Steel Mechanical Tubing.
B26-76a	Aluminum-Alloy Sand Castings.
B209-77	Aluminum-Alloy Sheet and Plate.
B221-76a	Aluminum-Alloy Extruded Bars, Rods, Wire, Shapes, and Tubes.
B584-73	Copper Alloy Sand Castings for General Applications.

2. RELATED WORK SPECIFIED ELSEWHERE:

2.1 General Requirements: Conform to all provisions of section entitled "General Requirements for Medical Equipment".

2.2 Service Connections to Equipment: Final utility connections and utility service to equipment under this section shall be provided under sections entitled "Interior Wiring Systems" and "Lighting, Interior".

3. SUBMITTALS: Conform to submittal provisions of section entitled "General Requirements for Medical Equipment".

3.1 Equipment Lists and Manufacturer's Literature: Seven copies of printed specifications and installation requirements for each item shall be submitted to and approved by the Contracting Officer.

3.2 Shop Drawings: Mounting detail drawings and utility connections for M-4895, M-4951, M-4771, and M-4890 shall be submitted to and approved by the Contracting Officer. Submit five sets of shop drawings for each item.

3.3 Certificates: Submit for Items M-4895, M-4951, M-4771 and M-4890.

4. MATERIALS:

4.1 Steel:

4.1.1 Seamless Tubes: ASTM A53, ASTM A512, or ASTM A513.

4.1.2 Plates: ASTM A366.

4.2 Aluminum:

4.2.1 Cast Aluminum: ASTM B26.

4.2.2 Extruded Aluminum: ASTM B221, Alloy 6061-T5 or 6061-T6, as applicable.

4.2.3 Sheets: ASTM B209.

4.2.4 Finish on Reflector Side of Aluminum Open Dome Lightheads: Mirror, with minimum specular reflection of 83 percent.

4.3 Brass: ASTM B584.

4.4 Chromium Plating: Apply over nickel coating. On brass and bronze, apply nickel coating either directly or over a coating of copper. On zinc alloy die castings, apply nickel coating over a coating of copper. Each coating shall completely cover surfaces that are visible after installation and conform to the following requirements:

4.4.1 Chromium Plating on Brass:

(a) Copper (optional, not required)

(b) Nickel: 0.00010 inch

(c) Chromium: 0.00001 inch

4.4.2 Chromium Plating on Zinc Alloy Die Castings:

(a) Copper: 0.00020 inch

(b) Nickel: 0.00030 inch (final nickel coating)

(c) Nickel Plus Copper: 0.00075 inch (total)

(d) Chromium: 0.00001 inch

5. COMPONENTS:

5.1 Wiring:

5.1.1 Current Leakage: Current leakage shall not exceed 0.1 milliampere, as measured between the dead metal parts and the ground.

5.2 Variable Intensity Control: Shall consist of a remotely located, wall recess mounted housing with a voltage regulator control to vary illumination intensity of surgical light fixture.

5.3 Suspension Systems: Each lighthead shall be mounted on a counter-balanced arm which can rotate 360 degrees horizontally and provide vertical and swivel adjustments. The fixture shall be controlled from both within or outside the sterile field and move freely, smooth and silently through its range of maneuverability without drifting when positioned at any point.

5.3.1 Mounting tripods shall attach to ceiling and be complete with a canopy cover finish to match fixture.

5.3.2 Ceiling tracks shall have end closures finished to match fixture, and have an opening in bottom, not more than 2 inches wide, extending entire length of track, to receive the part of the carriage which moves inside the track. Provide each track with insulated duct enclosing two copper bus bars to energize the trolley in the carriage. Furnish tracks complete with nuts, lock-washers and resilient gasket seal for installation. Tracks 9 feet long.

5.4 Optics:

5.4.1 Lightheads: Each lighthead shall provide shadow-free, cool, daylight quality illumination. Open dome lampheads shall be size as listed under the specific fixture, with reflector, focusing device, light source (accessible and replaceable without tools), and color correcting and heat absorbing glass filter.

5.4.2 Focus: Proper focus shall be attained at any distance from 30 inches to 60 inches below reflector rim and prime focus at 42 inches.

5.4.3 Color Temperature at Maximum Recommended Setting: Incandescent light source - approximately 4000 degrees Kelvin.

5.4.4 Infrared Transmission: Heat absorbing reflectors and filters shall transmit 20 percent or less of radiant heat energy downward; the rest is to be absorbed and carried away by convection currents.

5.5 Sterilizable Handles:

5.5.1 Provide each lighthead with at least one removable, sterilizable handle for each positioning fixture from within the sterile field.

5.5.2 Furnish two spare handles for each one provided with the lighthead.

6. INSTALLATION: Conform to installation provisions of Section entitled "General Requirements for Medical Equipment".

7. FIELD TESTS AND INSPECTIONS:

7.1 Inspection: Examine each item for visual defects and conformance to specifications.

7.2 Tests: Test each item to insure that the equipment is operational and conforms to specification requirements.

8. ITEMS:

8.1 Item: M-4895, Surgical Light Fixture, Pendant Mounted Suspension System, Closed Dome: (Identified as "SL-1" on the drawings)

8.1.1 Fixture assembly shall consist of one 22 inch diameter lighthead, mounted from a fixed ceiling pendant, suspended with a corrosion resistant metal carriage, with vertical suspension tubes, counter-balanced cross arms, suspension forks, suspension arms and yokes for lamphead attachments.

8.1.2 Include the following:

(a) Ceiling mounted pendant and suspension assembly.

(b) One lightheads, 22 inches in diameter, with filtered incandescent light source providing 2000 to 4000 footcandles.

(c) Reflector, dichromic coated glass surfaces allowing infrared energy up thru lighthead.

(d) Lamp, at least 500 hour, 120 volt, hologen type with color correcting devices providing approximately 4000 degrees Kelvin color temperature.

(e) Pattern, with prime focus at 42 inches providing a minimum of 8 inch diameter illuminated pattern.

(f) Area of Coverage: Lighthead shall have approximately 84 inch radius coverage from center pivot point.

(g) Fixture mounting plate and hardware for attaching assembly to building support structure.

(h) Intensity control, for wall recess mounting, providing continuous ranges of intensity from 2000 to 5000 footcandles.

8.1.3 Disposition: Install where indicated on the drawings.

8.2 Item: M-4951, Surgical Light Fixtures, Dual Track Closed Dome Lightheads: (Identified as "SL-2" on the drawings)

8.2.1 Fixture assembly shall consist of two 22 inch diameter lightheads, each suspended from a separate ceiling track with a corrosion resistant metal carriage, vertical suspension tube and counter-balanced cross arm with a yoke for lighthead attachment.

8.2.2 Include the following:

(a) Two ceiling tracks, each 9 feet long, suitable for surface mounting, each with lighthead suspension assembly.

(b) Two lightheads, 22 inches in diameter, with filtered incandescent light source providing 2000 to 5000 footcandles.

(c) Reflectors, two dichromic coated glass surfaces allowing infrared energy up thru lighthead.

(d) Lamps, one for each reflector, at least 500 hour, 120 volt, hologen type with color correcting devices providing approximately 4000 degrees Kelvin color temperature.

(e) Pattern, with prime focus at 42 inches providing a minimum of 8 inch diameter illuminated pattern.

(f) Area of Coverage: Each lighthead shall have approximately 47 inch radius coverage along 84 percent of its track length.

(g) Fixture mounting plate and hardware for attaching assembly to building support structure.

(h) Intensity control, for wall recess mounting, separate control for each lighthead, providing continuous ranges of intensity from 2000 to 5000 footcandles; separate control for each lighthead.

8.2.3 Disposition: Install where indicated on drawings.

8.3 Item: M-4771, Surgical Light Fixture, Single Track, Closed Dome: (Identified as "SL-3" on the drawings)

8.3.1 Light fixture shall consist of a single 22 inch diameter lighthead, suspended from a ceiling mounted track, with an aluminum carriage, vertical suspension tube, and counter-balanced cross arm, with a yoke lighthead attachment.

8.3.2 Include the following:

(a) Ceiling track, 9 feet long, suitable for surface mounting, with lighthead suspension assembly.

(b) One lighthead, 22 inch diameter with filtered incandescent light source, producing 2000 to 4000 footcandles.

(c) Reflectors, two dichromic coated glass surfaces allowing infrared energy up thru lighthead.

(d) Lamp, at least 500 hour, 120 volt, hologen type with color correcting devices providing a minimum of 4000 degree Kelvin color temperature.

(e) Pattern, with prime focus at 42 inches providing a minimum of 8 inch diameter illuminated pattern.

(f) Area of Coverage: Lighthead shall have approximately 47 inch radius coverage along 84 percent of track length.

(g) Intensity control, for wall recess mounting, providing continuous ranges of intensity from 2000 to 5000 footcandles.

8.3.3 Disposition: Install where indicated on drawings.

8.4 Item: M-4890, Surgical Light Fixtures, Pendant Mounted Suspension System, Open Dome: (Identified as "SL-4" on the drawings.)

8.4.1 Fixture assembly shall consist of two 14 to 16 inch diameter lightheads, mounted from a fixed ceiling pendant, suspended with a corrosion resistant metal carriage, vertical suspension tube, two cross arms, counter-balanced with yokes for lighthead attachments.

8.4.2 Include the following:

(a) Open dome coated reflectors, 14 to 16 inches in diameter with filtered incandescent light source producing from 1000 to 3500 footcandles each.

(b) Ceiling mounted pendant pivot with light suspension assemblies.

(c) Area of Coverage: Each lamphead shall have at least 48 inch radius coverage from the center pivot point.

(d) Each lighthead shall consist of a lamp enclosed in color correcting, heat absorbing cylinder, and aluminum air cooling louver.

(e) Variable intensity control for wall recess mounting for each assembly.

(f) Electrical Characteristics: 120 volts, 60 Hz, single phase, AC.

(g) Fixture mounting plate and hardware for attaching to building support structure.

8.4.3 Disposition: Install where indicated on drawings.

8.5 Item: M-4896, Surgical Light Fixture, Pendant Mounted Suspension System, Closed Dome: (Identified as "SL-5" on the drawings)

8.5.1 Fixture assembly shall consist of two 22 inch diameter lightheads, mounted from a fixed ceiling pendant, suspended with a corrosion resistant metal cariage, with vertical suspension tubes, counter-balanced cross arms, suspension forks, suspension arms and yokes for lamphead attachments. Provide separate arm system and yoke for each lighthead; single pendant.

8.5.2 Include the following:

(a) Ceiling mounted pendant and suspension assembly.

(b) Two lightheads, 22 inches in diameter, with filtered incandescent light source providing 2000 to 5000 footcandles each.

(c) Reflectors, two dichromic coated glass surfaces allowing infrared energy up thru lighthead.

(d) Lamps, one for each reflector, at least 500 hour, 120 volt, hologen type with color correcting devices providing approximately 4000 degrees Kelvin color temperature.

(e) Pattern, with prime focus at 42 inches providing a minimum of 8 inch diameter illuminated pattern.

(f) Area of Coverage: Each lighthead shall have approximately 84 inch radius coverage from center pivot point.

(g) Fixture mounting plate and hardware for attaching assembly to building support structure.

(h) Intensity control, for wall recess mounting, separate control for each lighthead, providing continuous ranges of intensity from 2000 to 5000 footcandles; separate control for each lighthead.

8.5.3 Disposition: Install where indicated on the drawings.

9. Approved Surgical Light Assemblies:

9.1 Manufacturers: products manufactured by American Sterilizer Company, Narco Medical Company, and Sybron Corporation are approved subject to the following conditions:

9.1.1 Conform to the requirements of Paragraphs 1 through 7 of this Section.

9.1.2 Conform to performance requirements of Paragraph 8 of this Section for pendants, rails, carriages, focus patterns, color temperature devices, and area of coverage for each type fixture assembly. Design features unique to each manufacturer's product will be allowed providing that the performance requirements are not materially affected. Variable intensity controls as specified.

9.1.3 Location of pendant mounts and ceiling tracks shall be as indicated on the drawings. Successful manufacturer shall verify final location dimension.

9.1.4 Lightheads: The following models are approved:

SL-1, pendant mount, one lighthead
- Amsco — one 22-inch diameter "Challenge"
- Piling — one 22-inch diameter "Source"
- Castle — one "Twin Star" pendant mount

SL-2, two tracks, two lightheads
- Amsco — one 22-inch diameter "Challenge" on each track
- Piling — one 22-inch diameter "Source" on each track
- Castle — one "Twin Star" on each track

SL-3, one track, one lighthead
- Amsco — one 22-inch diameter "Challenge" on one track
- Piling — one 22-inch diameter "Source" on one track
- Castle — one "Twin Star" on one track

SL-4, dual exam light, pendant mount
- See Paragraph 8.4, this Section

SL-5, pendant mount, two lightheads*
- Amsco — two 22-inch "Challenge" on two arms, one pendant
- Piling — two 22-inch "Source" on two arms, one pendant
- *Castle — 40-inch "Day Star" on pendant

*Only one unit required with this lighthead design.

---END---

SECTION 11716. HYDROTHERAPY EQUIPMENT

1. APPLICABLE PUBLICATIONS: The following publications of the issues listed below, but referred to thereafter by basic designation only, form a part of this specification to the extent indicated by the references thereto:

1.1 Federal Specifications:

GG-B-146B Bath, Whirlpool, CRM.

1.2 American Society for Testing and Materials (ASTM) Publications:

A167-74 Stainless and Heat-Resisting Chromium Nickel Steel Plate, Sheet, and Strip.

B221-76a Aluminum-Alloy Extruded Bars, Rods, Wire, Shapes and Tubes.

1.3 National Fire Protection Association (NFPA) Publications:

70-1978 National Electrical Code.

2. RELATED WORK SPECIFIED ELSEWHERE:

2.1 General Requirements: Conform to all provisions of section entitled "General Requirements for Medical Equipment".

2.2 Service Connections to Equipment: Final utility connections and utility service to equipment under this section including waste shall be provided under sections entitled "Plumbing" and "Interior Wiring Systems".

3. SUBMITTALS: Conform to submittal provisions of section entitled "General Requirements for Medical Equipment".

3.1 Equipment Lists and Manufacturer's Literature: Seven copies of printed specifications and installation requirements for each item shall be submitted to and approved by the Contracting Officer.

3.2 Shop Drawings: Diagrammatic drawings and detailed utility connection drawings for each item shall be submitted to and approved by the Contracting Officer. Submit five sets of shop drawings for each item.

3.3 Certificates: Submit for Items M-1280, M-1250 and M-1275.

4. MATERIALS:

4.1 Stainless Steel: ASTM A167, except as otherwise specified, Class 301, 302, or 304. Exposed surfaces shall have a satin finish.

4.2 Aluminum Alloy: At least equivalent in ultimate tensile, yield and shear strengths to Alloy 6063-T5 or 6063-T6, as applicable, conforming to ASTM B221.

5. COMPONENTS: The following components shall comply with GG-B-146:

Tank construction

Tank fittings

Dial thermometer

Thermostatic water-mixing valve

Electric turbine-ejector and aerator

Screening or similar protective devices

Turbine-ejector elevator

6. DISPOSITION: Conform to installation provisions of section entitled "General Requirements for Medical Equipment".

7. FIELD TESTS AND INSPECTIONS:

7.1 Inspection: Examine each item for visual defects and conformance to specifications.

7.2 Tests: Test each item to insure that the equipment is operational and conforms to specification requirements.

8. ITEMS:

8.1 Item M-1280, Hydro-Treatment Bath, Reclining:

8.1.1 Bath shall be full-body hydrotherapy tank, suitable for reclining body treatment, fabricated of stainless steel, complete with specified accessories; conforming to GG-B-146, except as specified otherwise herein; ASTM A167 and NFPA 70.

8.1.2 Include the following:

(a) Stainless steel treatment tank, 18 gauge or thicker, welded construction, approximately 34 inches high x 105 inches long x 22 inches deep, figure 8 design, with nominal dimensions of 72 inches at widest portion, 35 inches at narrowest portion, and 52 inches at foot. Overall height not to exceed 35 inches.

(b) Drain system, minimum 3 inches, with strainers and stoppers, and two overflows that provide positive water overflow and surface scum clearance.

(c) Electric turbine ejectors and aerators, two each, with at least a 1/3 HP motor and turbine ejector raising and lowering devices.

(d) Dual thermometer, approximately 3-1/2 inches in diameter, tank mounted.

(e) Water inlet for connection to thermostatic valve.

(f) Thermostatic valve, appropriate for conditions of use, cabinet enclosed, and designed for wall recess mounting, at least 125 gallon per minute, with valve.

(g) Electrical convenience outlets, duplex type, ground fault protected, 3 wire type, 120 volts, 60 Hz, AC, 2 each. Mount one on each side of narrow portion of tank in weatherproof covered box.

(h) Furnish drain fittings, chain pull, 3 inch drain valve, adjustable hand rails, stainless steel steps and two perforated s.s. trough covers.

(i) Hose bibb on exterior of tank; include flexible hose for wash down of tank.

(j) Hoist Assembly, Including the Following (UL listed):

(1) Electric hoist, with 24 volt, moisture-proof, push-button control, chain container, line cord, 1/4 hp motor, with instant reverse capability, built-in circuit breaker protection against internal short circuiting, upper and lower limit switch, upper and lower safety hook, insulated lower hook block, oversize attaching link on slack end of chain and ball bearing steel trolley.

(2) Cord reel, electric, swiveling and automatic retracting type, with at least 25 feet of rubber covered wire cable.

(3) Cross bar and suspension, stainless steel, with snap-hooks.

(4) Water stretcher frame, stainless steel, with two removable vinyl laminated fabric stretchers, with drain holes and necessary facing string for body support.

(5) Body sling, two each, vinyl laminated fabric, with necessary eyelets for attachment by snaphooks.

(6) Wall brackets, stainless steel, suitable for wall storage of accessories specified above.

(k) Electrical Characteristics: 120 volt, 60 Hz, single phase, AC.

8.1.3 Disposition: Install where indicated on drawings and install ceiling "I" beam to carry hoist assembly and trolley.

8.2 Item M-1250, Bath, Whirlpool, Leg Treatment:

8.2.1 Bath shall be floor mounted hydrotherapy unit, suitable for arm, leg and hip treatment, fabricated of stainless steel, conforming to Federal Specification GG-B-146, except as otherwise noted; ASTM A167 and NFPA 70.

8.2.2 Include the following:

(a) Stainless steel tank, welded construction, approximately 39 inches high, 20 inches wide, and 42 inches long overall, with a depth of 28 inches, with s.s. pedestal.

(b) Drain system, 2 inch handle operated type, with 2 inch overflow that provides positive water overflow and water surface scum clearance.

(c) Electric turbine ejector and aerator with at least a 1/3 HP motor and turbine ejector raising and lowering device, 115 volt, 60 Hz.

(d) Dial thermometer, approximately 3-1/2 inches in diameter, tank mounted.

(e) Water inlet assembly, chromium plated, for connection to thermostatic valve, complete with vacuum breaker, volume control valve, piping and fittings.

(f) Thermostatic valve, appropriate for conditions of use and designed for wall mounting, at least 10 gpm.

(g) Arm rest, one each, fabricated of stainless steel, suitable for supporting arm inside tank during treatment.

(h) Accessories: One adjustable height chair, adjustable suspension seat and rubber hand grips.

8.2.3 Disposition: Install where indicated on drawings.

8.3 Item M-1275, Tank, Hydrotherapy, Lowboy:

8.3.1 Bath shall be floor mounted hydrotherapy unit suitable for leg and hip treatment, fabricated of stainless steel, conforming to Federal Specification GG-G-146, unless otherwise noted; ASTM A167 and NFPA 70.

8.3.2 Include the following:

(a) Stainless steel tank, welded construction, approximately 23 inches high, 24 inches wide and 66 inches long overall, with a depth of 18 inches, with s.s. pedestal.

(b) Drain system, 2 inch drain, handle operated type, with 2 inch overflow that provides positive water overflow and water surface scum clearance.

(c) Electric turbine ejector and aerator with at least a 1/3 HP motor and turbine ejector raising and lowering device, 115 volt, 60 Hz, AC.

(d) Dial thermometer, approximately 3-1/2 inches in diameter, tank mounted.

(e) Water inlet assembly, chromium plated, for connection to thermostatic valve, complete with vacuum breaker, volume control valve, piping and fittings.

(f) Thermostatic valve, appropriate for conditions of use and designed for wall mounting, at least 10 gpm.

(g) Arm rest, one each, fabricated of stainless steel, suitable for supporting arm inside tank during treatment.

(h) Accessories: One adjustable suspension seat and rubber hand grips.

8.3.3 Disposition: Install where indicated on drawings.

---END---

SECTION 11730. WASHING EQUIPMENT

1. APPLICABLE PUBLICATIONS: The following publications of the issues listed below, but referred to thereafter by basic designation only, form a part of this specification to the extent indicated by the references thereto:

1.1 Federal Specifications:

GG-W-00101C (VA-MED)	Washers, Bedpan and Urinal

1.2 Veterans Administration Specifications:

X-1417a	Washing Machine, Glassware, Laboratory

1.3 American Society for Testing and Materials (ASTM) Publications:

A167-74	Stainless and Heat-Resisting Chromium-Nickel Steel Plate, Sheet and Strip
A568-72	Steel Carbon and High-Strength Low-Alloy Hot-Rolled Sheet, Hot-Rolled Strip, and Cold-Rolled Sheet, General Requirements
B88-76	Seamless Copper Water Tube
B135-74	Seamless Brass Tube
B221-76a	Aluminum-Alloy Extruded Bars, Rods, Wire, Shapes and Tubes

2. RELATED WORK SPECIFIED ELSEWHERE:

2.1 General Requirements: Conform to all provisions of section entitled "General Requirements for Medical Equipment".

2.2 Service Connections to Equipment: Final utility connections and utility service to equipment under this section including waste shall be provided under sections entitled "Plumbing" and "Interior Wiring Systems".

3. SUBMITTALS: Conform to submittal provisions of section entitled "General Requirements for Medical Equipment".

3.1 Equipment Lists and Manufacturer's Literature: Seven copies of printed specifications and installation requirements for each item shall be submitted to and approved by the Contracting Officer.

3.2 Shop Drawings: Diagrammatic drawings and detailed utility connection drawings for each item shall be submitted to and approved by the Contracting Officer. Submit five sets of shop drawings for each item.

3.3 Certificates: S[redacted]60.

4. MATERIALS AND COMPONENTS: Conform to the specifications referenced herein for each item, with the following exceptions or additions:

4.1 Aluminum Alloy: Equivalent in ultimate tensile, yield and shear strengths to Alloy 6063-T5 or 6063-T6, conforming to ASTM B221.

4.2 Carbon Steel: ASTM A568, cold rolled sheets, commercial bright finish. Stretcher level sheets 16 gauge and lighter.

4.3 Chromium Plating: Apply over nickel coating. On brass or bronze, apply nickel coating either directly or over a coating of copper. On zinc alloy die castings, apply nickel coating over a coating of copper. Each coating shall completely cover surfaces that are visible after installation, and conform to the following:

4.3.1 Chromium Plating on Brass:

(a) Copper: Optional, not required

(b) Nickel: 0.00010 inch, 0.0025 mm.

(c) Chromium: 0.00001 inch, 0.00025 mm

4.3.2 Chromium Plating on Zinc Alloy Die Castings:

(a) Copper: 0.00020 inch, 0.0051 mm

(b) Nickel: 0.00030 inch, 0.0076 mm (final nickel coating)

(c) Nickel Plus Copper : 0.00075 inch, 0.019 mm (total)

(d) Chromium: 0.00001 inch, 0.00025 mm

4.4 Clad Metals: Nickel, nickel-copper alloy, or stainless steel clad to steel shall be at least 10 percent of total thickness of metal.

4.5 Corrosion Resisting Metal: Either nickel-copper alloy or stainless steel or white metal.

4.6 Fasteners: Rivets, bolts, nuts, studs, spacers, and metals used for welding shall be of same kind of metal as material being fastened or of a metal that will not react to cause corrosion. Where corrosion resistant metals are jointed to each other or to other metals, rivets, bolts, and material used for welding shall be corrosion resistant metal.

4.7 Stainless Steel: ASTM A167, Class 301, 302, or 304. Exposed surfaces shall have a satin finish.

4.8 Pipe and Tubing: Seamless, annealed, and ground smooth. Welded tubing shall be thoroughly heat treated and properly quenched to eliminate carbide precipitation, drawn true to size and roundness. Steam, water and waste lines; ASTM B88, or ASTM B135, Alloy 1.

4.9 Timers: Capable of being programmed by operator and provided with automatic reset.

5. INSTALLATION: Conform to installation provisions of Section entitled "General Requirements for Medical Equipment".

6. FIELD TESTS AND INSPECTIONS:

6.1 Procedure: Perform in accordance with reference specifications.

6.2 Inspection: Examine each item for visual defects and conformance to specifications.

6.3 Tests: Test each item to insure that the equipment is operational and conforms to specification requirements.

7. ITEMS:

7. ITEMS:

7.1 Item L-2100, Dryer, Laboratory Glassware: Delete entire paragraph and substitute the following in lieu thereof:

"7.1x Omitted".

7.2 Item L-3010, Washer, Glassware and Utensil, Steam: Delete entire paragraph and substitute the following in lieu thereof:

"7.2x Omitted".

inches.

(b) Controls, automatic.

(c) Single door, swing as indicated on drawings.

(d) Switch, door heater cut-off.

(e) Service characteristics: 208 volt, 3 phase, 60 Hz, AC.

7.1.3 Disposition: Install where indicated on drawings.

7.2 Item L-3010, Washer, Glassware and Utensil, Steam:

7.2.1 Washer shall be a steam heated, freestanding, cabinetized unit, for washing laboratory glassware consisting of petri dishes, beakers, flasks, pipettes of assorted sizes, and hospital metalware, consisting of bedpans, basins, trays, urinals, bowls, and small cups; overall maximum dimensions 43 inches across face, 35 inches front to back, 80 inches high; conforming to VA Specification X-1417, except as otherwise specified herein.

7.2.2 Include the following:

(a) Cabinet fabricated of welded stainless steel, with access panel on loading side to facilitate all servicing from front of unit. Exposed to view stainless steel with satin finish.

(b) Wash compartment, enclosed in base cabinet, for liquid detergent, with automatic dispensing system and means for determining detergent level in system.

(c) Load capacity, 26 inches in diameter by 20 inches high.

(d) Door, vertical sliding type.

(e) Pre-treated water tank and pump, for distilled rinse water.

(f) Vent system, exhaust through duct collar.

(g) Controls, automatic, with adjustable cycles. Include thermostatic control of hot water cycles.

(h) Intregal water heat booster to provide 180 degree water.

(i) Load racks, baskets and devices, to provide for two complete loads of each of the following products, when one load is being washed and the other load is being loaded or unloaded: Pipettes, flasks, miscellaneous small instruments, and miscellaneous small bowls. Load racks, baskets, and devices to be completely compatible for use in the Dryer, Laboratory Glassware (Item L-2100, Paragraph 7.1) without transfer of contents.

(j) Service Characteristics:

(1) Hot Water: 40 to 80 psi, 1" inch line.
Cold Water: 1/2 inch NPT.

(2) Pre-treated Water: 3/4 inch NPT (20 to 50 psig).

(3) De-ionized water, 3/4 inch NPT.

(4) Steam: 30 to 80 psi, 80 to 270 pounds per hour, 3/4 inch NPT.

(5) Electrical: 120 volts, 60 Hz, AC.

(6) Condensate, 1/2 inch NPT, return to source.

(7) Drain, 2 inch NPT.

~~7.2.3 Disposition: Install where indicated on drawings.~~

7.3 Item S-6700, Washer, Bedpan and Urinal:

7.3.1 Washer shall be a wall recessed type, for washing and sanitizing patient bedpans and urinals; Type III, Class 1, conforming to GG-W-101.

7.3.2 Include the following:

(a) Controls, automatic.

(b) Service Characteristics:

(1) Electrical: 120 volts, 60 Hz, AC.

(2) Cold Water: 30 psi., 1 inch NPT.

(3) Steam: 3/8 inch NPT.

(4) Drain, 3 inch NPT.

7.3.3 Disposition: Install where indicated on drawings.

7.4 Item M-5700, Rack, Drying; Bedpan/Urinal:

7.4.1 Unit shall be wall mounted, all stainless steel construction, adequate for drying 6 male urinals and 3 bedpans. Provide stainless steel drip pan below.

7.4.2 Disposition: Wall mount at height shown adjacent to bedpan washer where indicated on drawings.

7.5 Item M-3960, Washer, Equipment, Steam; Gun Set with Table:

7.5 Item M-3960, Washer, Equipment, Steam; Gun Set with Table: Delete entire paragraph and substitute the following in lieu thereof:

"7.5x Omitted".

7.5.2 Include the following:

(a) Gun, squeeze action, fingertip control.

(b) Mixing nozzle with pinpoint, pressurized action.

(c) Low heat conducting handgrips with wire and asbestos wrapped steam hose, 10 feet long.

(d) Polyethylene detergent tank 2-1/2 gallon capacity, wall mounted, with 10 foot long detergent hose constructed identically to steam hose.

(e) Strainer and regulator valve (detergent and steam to nozzle).

(f) Steam-water selector; brass pipes and valves; stainless steel manifold, wall mounted.

(g) Accessories: Protective gloves, one 2 inch diameter nylon brush and one 2 inch diameter stainless steel brush.

(h) Wall mounted, hinged fold down table, 60 inches long by 29 inches deep, mounted 36 inches above floor. Fabricate of stainless steel countertop and backsplash, folding brackets with hemmed edges and mounting supports. Top braced and supported with stainless steel channels and flanges and hinged with continuous piano hinges. Include all hardware for wall mounting. See details included in this section.

7.5.3 Service Characteristics:

(a) Steam: 1/4 inch NPT condensate to drain.

(b) Water: Cold, 1/4 inch NPT (30 to 40 psig).

7.5.4 Disposition: Install where indicated on drawings.

---END---

SECTION 11744. DENTAL EQUIPMENT

1. APPLICABLE PUBLICATIONS: The following publications of the issues listed below, but referred to thereafter by basic designation only, form a part of this specification to the extent indicated by the references thereto:

1.1 American Society for Testing and Materials (ASTM) Publications:

A167-74	Stainless and Heat-Resisting Chromium-Nickel Steel Plate, Sheet and Strip.
A568-72	Steel Carbon and High-Strength Low-Alloy Hot-Rolled Sheets, Hot-Rolled Strip, and Cold-Rolled Sheet, General Requirements.
B221-76a	Aluminum-Alloy Extruded Bars, Rods, Wire, Shapes and Tubes.

1.2 National Fire Protection Association (NFPA) Publications:

70-1978	National Electrical Code.

1.3 United States Department of Commerce Product Standards:

PS 1-74	Construction and Industrial Plywood.

2. RELATED WORK SPECIFIED ELSEWHERE:

2.1 General Requirements: Conform to all provisions of section entitled "General Requirements for Medical Equipment".

"2.2x Service Connections to Equipment: Final utility connections to equipment under this section including waste shall be provided under sections entitled "Plumbing", "Nonflammable Medical Gas Systems", and "Interior Wiring Systems"."

3. SUBMITTALS: Conform to submittal provisions of section entitled "General Requirements for Medical Equipment" including the following:

3.1 Equipment Lists and Manufacturer's Literature: Submit seven copies for each specified item.

3.2 Shop Drawings: Submit for Items D-4000, D-7040, D-9200 and D-9300. Submit five sets of shop drawings for each item.

3.3 Samples: Not required.

3.4 Certificates: Submit for Items D-4000, D-9200 and D-9300.

4. MATERIALS AND COMPONENTS:

4.1 Stainless Steel: ASTM A167, except as otherwise specified, Class 301, 302, or 304. Exposed surfaces shall have a No. 4 finish.

4.2 Aluminum Alloy: At least equivalent in ultimate tensile, yield and shear strengths to Alloy 6063-T5 or 6063-T6, as applicable, conforming to ASTM B221.

4.3 Carbon Steel: ASTM A568, cold rolled sheets, commercial bright finish stretcher level sheets 16 gauge and lighter before fabrication.

4.4 Wiring: Electrical wiring, components and devices provided under this section shall conform to applicable provisions of NFPA 70.

5. EQUIPMENT: Conform to UL 544; produce less than 81 decibels sound when operating at full capacity. Rotating parts, pulleys, and belts shall be fully enclosed.

6. INSTALLATION: Conform to installation provisions of section entitled "General Requirements for Medical Equipment".

7. FIELD TESTS AND INSPECTIONS:

7.1 Inspection: Examine each item for visual defects and conformance to specifications.

7.2 Tests: Test each item to insure that the equipment is operational and conforms to specification requirements.

8. ITEMS:

8.1 Item D-4000, Compressor, Air, Dental.

8.1.1 Duplex packaged air compressor and dryer, each compressor having a minimum capacity of 20 for free air at 80 psig discharge pressure. All components shall be mounted on a common steel frame, wired and piped as a complete packaged unit, requiring a single 460/3/60 power source.

8.1.2 Compressor: Oil-free compressor shall be reciprocating, rotary, or centrifugal type, capable of continuous operation at design condition.

8.1.3 After Coolers: Water cooled after coolers are required on reciprocating type compressors. Size coolers for cooling the air to within 15 degrees of inlet water temperatures. The water supply shall be cut off by a solenoid valve when the compressor is not running.

8.1.4 Inlet Silencers: Provide a properly sized silencer for each compressor.

8.1.5 Drives: Electric motor drives with either flexible couplings or V-belt drives. Reciprocating compressors shall have V-belt drives. Drive guards shall conform to ANSI B15.1.

8.1.6 Motors and Motor Starters: NEMA MG1 and NEMA ICS. Motors shall have dripproof enclosures. Motor starters shall be magnetic across-the-line type with general purpose enclosures, and have thermal overload protection in each phase.

8.1.7 Receiver: Welded steel, 80 gallon capacity, and conforming to ASME Boiler and Pressure Vessel Code Section VIII and ASME labeled for 125 psig. Receiver shall have corrosion preventative lining, gauges, switches, drains and factory applied coating of paint.

8.1.8 Air Dryer, Refrigerated: Self contained, hermetically sealed compressor, moisture separator, heat exchanger, automatic controls and automatic drain. Units shall be capable of drying 95 degrees F saturated air at indicated cfm to a minus 10 degrees F dew point (atmospheric dew point). House unit in an enameled steel cabinet. Controls shall automatically shut down units at low or no load conditions.

8.1.9 Air Filter: 5 micron air filter of the indicated cfm capacity and working pressure.

8.1.10 Automatic Controls: Provide automatic controls for alternating the units on start-up and for a one minute delay of second unit start-up when units are on emergency power.

DE-2 8.2 Item D-7040, Utility Connection Device (Category "B" Equipment):

8.2.1 Device consists of a utility junction box assembly for floor mounting in a dental operatory and provides required services to a dental operating apparatus by means of one umbilical cord. This Item is Category "B", Government furnished and Contractor installed. Conform to NFPA 70.

8.2.2 Assembly includes the following:

(a) Housing, corrosion resistant metal box with removable cover and open back; approximately 9 inches by 14 inches by 3 inches high.

(b) Quick disconnect valves, two assemblies, each with 1/2 inch female threaded inlet, including one for air and one for water supply.

(c) Switch, one toggle type valve for mounting through end of housing.

(d) Tubing for connecting inside assembly.

8.2.3 Disposition: Install recessed in floors and walls, where indicated on drawings, and as shown herein as sketch No. 11744-1, Utility Connection Device Template, and provide necessary utilities including the following:

(a) Air, 1/2 inch threaded pipe protruding one inch from mounting surface, 60 to 100 psi.

(b) Water, 1/2 inch threaded pipe protruding one inch from mounting surface, 40 to 80 psi water pressure.

(c) Electrical power, 120 volt, 60 Hz, AC, grounded duplex convenience outlet in "J" box, with cover plate mounted inside the device housing on floor.

(d) Central oral vacuum, 5/8 inch O.D. copper. Line to run at least one inch above finish floor and approximately 1-1/2 inch parallel to floor.

8.3 Item D-9501, Trimmer, Dental Model (Category "B" Equipment):

8.3.1 Trimmer, Dental, for use in Dental Clinic, approximately 12 inches wide by 15-1/2 inches deep by 13 inches high. This Item is Category "B", Government furnished and Contractor installed. Conform to NFPA 70.

8.3.2 Include the following:

(a) Abrasive wheel.

(b) Adjustable and removable work table.

(c) 7-1/2 foot long cord and plug.

(d) 120 volts, 60 Hz, 1 phase, AC; 225 watts.

8.3.3 Disposition: Install where indicated on drawings.

8.4 Item D-6600, Mixer-Investor, Vacuum (Category "B" Equipment):

8.4.1 Mixer-Investor for use in Dental Clinic; approximately 350 gram capacity. This Item is Category "B", Government furnished and Contractor installed. Conform to NFPA 70.

8.4.2 Include the following:

(a) Unit, with all controls.

(b) Two speed operation.

(c) 1/3 HP motor.

(d) Mounting brackets and all accessories.

(e) 120 volt, 60 Hz, 1 phase, AC.

8.4.3 Disposition: Install where indicated on drawings.

8.5 Item D-9300, System, Ord Evac., Central/Wet: RFP-85

8.5.1 Turbines Centrigfugal - Two Required: Each turbine shall be a four-bearing direct drive coupled unit on a common tubular steel frame capable of providing 12 in. hg. minimum while simultaneously delivering 100 CFM. The turbine must not turn faster than 3600 RPM. The manufacturer of the turbines must provide certified flow charts and graphs showing above performance data, and be prepared to perform a test with flow equipment at the Contracting Officer's discretion.

8.5.2 Motor: Shall be continuous duty, TEFC, 460 volts, 3 phase 60 Hertz, 3450 RPM with bearings either sealed or of the lubricated type. All lubrication instructions shall be stamped on the motor or directly attached.

8.5.3 Isolators: Shall be required for the vacuum turbines and the turbine vibration level of each turbine shall not exceed 1.5 mils measured and stamped on equipment.

8.5.4 Mufflers: The open bore expansion type shall be used for the reduction of exhaust noise and shall be of the clean bore style without deflectors or baffles and in no way shall they increse the exhaust air temperature or cause back pressure.

8.5.5 Automatic Turbine Check Valves: These valves will allow either turbine the option of operating on physical command from the control panel by stopping bleed air coming from the turbine not in operation. These valves are to operate by the suction created by the turbine automatically and not by manual or electrical means.

8.5.6 Flexible Type Pipe Isolators: Shall be required between piping and intake and exhaust of turbine and separator.

8.5.7 Liquid Separator Collection Tank: Shall employ tangetial intake or connection from operatory piping. It shall be an all fiberglss, one piece constructed unit. The bottom shall be bell shaped to allow fast discharge to floor sink. This separator must be equipped with an automatic overflow to safeguard from an accidental over-filling. This tank must be certified to maintain a constant negative pressure of 12" Hg maximum. It shall be free standing, capable of supporting its own weight plus the weight when filled to capacity with water. The tank shall have a capacity of 65 gallons. Manual flushing shall also be incorporated with a 3/4 connection to building cold water per local code.

8.5.7 Liquid Separator Collection Tank: In the last line change "local code" to "Standard Plumbing Code".

8.5.8 Remote Control Panel: Shall be provided and shall operate each turbine on command. This panel will read negative pressure within the piping system in inches of mercury. It shall be equipped with an indicator light showing the turbine is in operation as well as a switch to turn the turbine on and off. It shall be a brushed stainless steel finish with all switches and lights flush mounted. "On" - "Off" indicators shall be included on the face of the panel.

8.5.9 Surge Control Device & Silencer: Shall be provided to prevent surging or pulsation. At low air flow from turbine, automatic modulation surge control is to bleed air into the system, when system is operating at less than 50 percent capacity. The surge control device shall be mounted in the pipe extending from the central separator to the turbine suction or inlet. The inlet part of the bleed valve shall have a baffled, sound-absorbent lined muffler to silence air noise to an acceptable level. The bleed valve shall be controlled by a motor-current sensing device.

8.5.10 Motor-Current Sensing Device: Shall be provided for turbine. The sensing device shall operate the bleed valve after the turbine is turned on manually. All control wiring, control components transformers and accessories required for the complete control system shall be provided. The control system components shall be housed in a single steel NEMA I control panel enclosure. The entire panel shall be factory assembled, wired and tested.

8.5.11 Electrical Motor Control Panel: Shall be required for the turbine motors. This panel shall be constructed of a NEMA I enclosure surface mounted, including magnetic starters, non-reversing type with overload protection in all phases. Low voltage protection or release and external manual reset overload protection or release and external manual reset overload protection shall be a thermal solder pot relay with manual reset. Holding coil shall be 120V rated.

The control circuit shall be operated by a line voltage transformer reduced to 120 V. This transformer shall be sized for the total number of devices to be controlled. This panel shall supply line voltage to the starter via a circuit breaker internally mounted and shall be magnetic trip type for motor circuit protection and shall be sized for horsepower rating of the motor and starter. An operating handle shall be a through the door type and shall be interlocked so that it must be in the off position before opening the enclosure door. There shall be a hand-off-auto switch for each starter and a green pilot light for each switch to indicate "Off" and a red pilot light to indicate "On". The auto mode shall operate a remote panel located in the dental facility. This panel shall be complete including all components necessary for proper operation. All terminal strips where remote switching and lights connect shall be clearly marked. Any remote connections which begin or terminate in this control panel shall be connected to a prewired terminal strip and not the deive itself.

Complete drawings and diagrams including a point to point wiring diagram showing each device and connection of a wire or wires to the device and other devices will be included in the operations manual. This panel may also incorporate the surge control system and may be powered by the control transformer included in this panel. The remote switching shall be 120 V and 120 V pilot light. One switch and one light for each vacuum turbine.

8.5.12 Ingestion Gates: Shall be so designed, installed and set, so not to allow overdrain of motor amperage to occur.

8.6 Item D-0760, Casting Machine Guard, 13 Inch:

8.6.1 For Prosthetic Dental Laboratory, casting machine guard and rim, 13 inch diameter. Stainless steel guard and stainless steel rim to trim working surface.

8.6.2 Disposition: Install in Prosthetic Laboratory where indicated on drawings.

8.7 Item D-8600, Bin, Plaster, 4 Compartment:

8.7.1 Prosthetic Dental Equipment, Plaster Bin, four compartment, wall hung, 300 pound capacity, 20 gauge steel with 18 gauge ends, 30 inches high by 10 inches wide by 36 inches long.

8.7.2 Disposition: Install in Prosthetic Laboratory where indicated on drawings.

8.8 Item D-0860, Light, Bench, Dental:

8.8.1 For Prosthetic Dental Laboratory, Bench Light, 110 volt, 60 Hz, AC. Rotates 330 degrees horizontally on ventilated transformer base; arm moves 110 degrees in vertical arc and shade tilts 180 degrees. Conform to NFPA 70.

8.8.2 Disposition: Install in Prosthetic Laboratory where indicated on drawings.

---END---

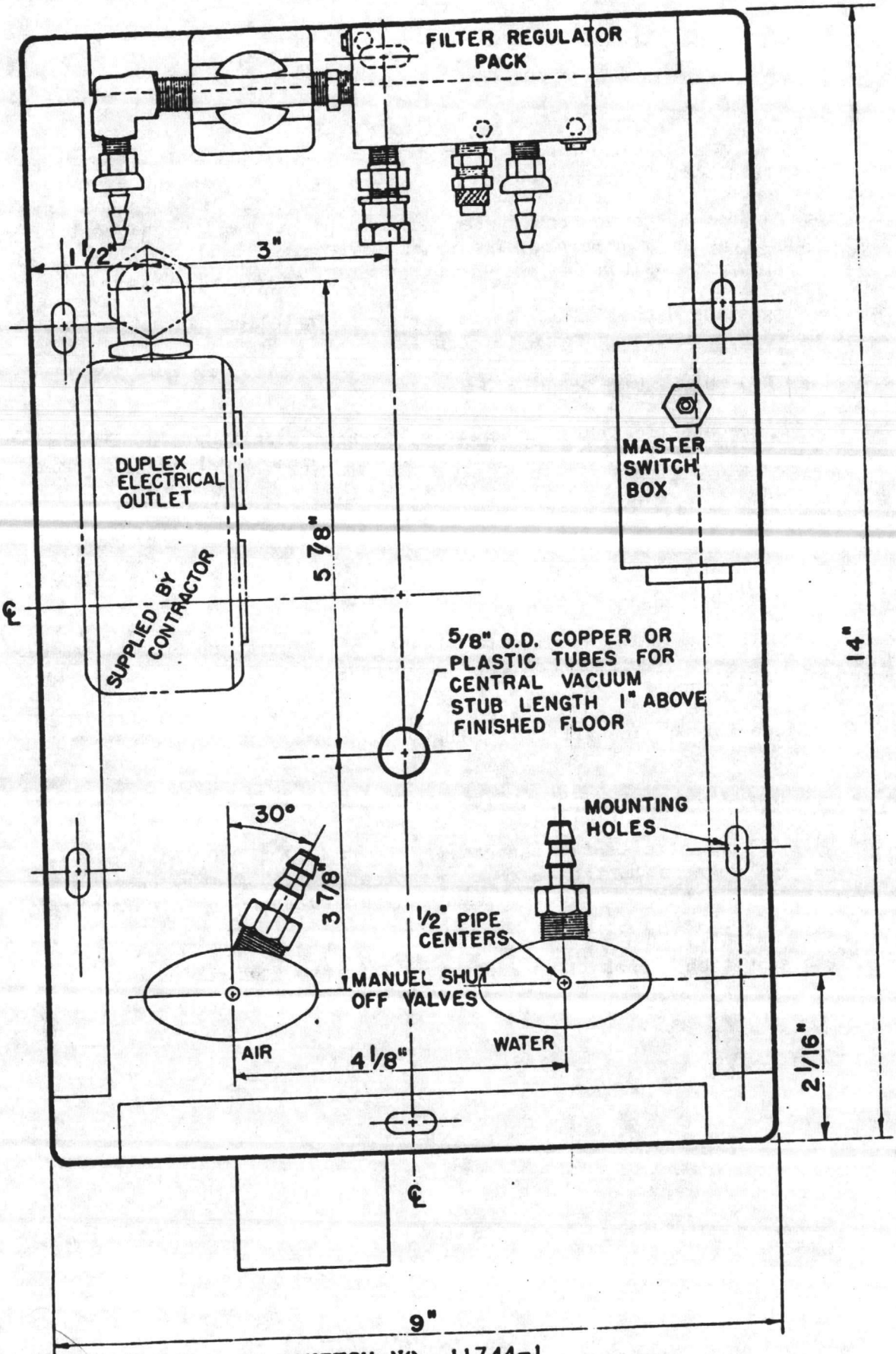

SKETCH NO. 11744-1

UTILITY CONNECTION DEVICE TEMPLATE

05-77-7526

11744-8

SECTION 11757. RADOIGRAPHIC DARKROOM EQUIPMENT

1. APPLICABLE PUBLICATIONS: The following publications of the issues listed below, but referred to thereafter by basic designation only, form a part of this specification to the extent indicated by the references thereto:

1.1 Federal Specifications:

GG-I-00446D	Illuminator, X-ray Film.
WW-P-541/7B & Int Am 1	Plumbing Fixtures (Shower Bath and Heads, and Water Control Valves, Land Use).

1.2 American Society for Testing and Materials (ASTM) Publications:

A167-74	Stainless and Heat-Resisting Chromium-Nickel Steel Plate, Sheet, and Strip.
A568-74	Steel, Carbon and High-Strength Low-Alloy Hot-Rolled Sheet, Hot-Rolled Strip, and Cold Rolled Sheet, General Requirements.
B221-76a	Aluminum-Alloy Extruded Bars, Rods, Wire, Shapes, and Tubes.

1.3 National Electrical Manufacturer's Association (NEMA) Publications:

LD 3-1975	High-Pressure Decorative Laminates.

1.4 United States Department of Commerce Product Standards:

PS 1-74	Construction and Industrial Plywood.

2. RELATED WORK SPECIFIED ELSEWHERE:

2.1 General Requirements: Conform to all provisions of section entitled "General Requirements for Medical Equipment".

2.2 Service Connections to Equipment: Final utility connections to equipment under this section including waste shall be provided under section entitled "Plumbing" and "Interior Wiring Systems".

3. SUBMITTALS: Conform to submittal provisions of section entitled "General Requirements for Medical Equipment", including the following:

3.1 Equipment Lists and Manufacturer's Literature: Seven copies of printed specifications and installation requirements for each item shall be submitted to and approved by the Contracting Officer.

3.2 Shop Drawings: Diagrammatic drawings and detailed utility connection drawings for items: X-7700, M-5581,M-5582, M-5579, X-5300, X-5301, X-5302, M-5583 and M-5580 shall be submitted to and approved by the Contracting Officer. Submit five sets of shop drawings for each item.

3.3 Certificates: Submit for Items X-3800, X-3830, X-3900, X-3930, X-3960, X-4000, X-4010, X-5300, M-5579, M-5580, M-7700, M-5582 and M-5583.

3.3.1 Leakage Certificate: Furnish documents certifying that the maximum ballast leakage for each section of each type of film illuminator specified does not exceed 25 micro amps.

4. MATERIALS AND COMPONENTS: Except as specified otherwise herein, conform to the following:

4.1 Aluminum Alloy: Equivalent in ultimate tensile, yield and shear strengths to Alloy 6063-T5 or 6063-T6, conforming to ASTM B221.

4.2 Carbon Steel: Conform to ASTM A568, cold rolled sheets, commercial bright finish. Stretcher level sheets 16 gauge and lighter.

4.3 Stainless Steel: ASTM A167, Class 301, 302 or 304.

5. INSTALLATION: Conform to installation provisions of section entitled "General Requirements for Medical Equipment".

6. FIELD TESTS AND INSPECTION:

6.1 Procedure: Perform in accordance with reference specifications.

6.2 Inspections: Examine each item for visual defects and conformance to specifications.

6.3 Tests: Test each item to insure that the equipment is operational and conforms to specification requirements.

7. ITEMS:

7.1 Item X-3150, Rack, Apron and Glove:

7.1.1 Rack, wall mounted, for holding aprons and gloves in x-ray rooms.

7.1.2 Include the following:

(a) Mounting bracket, 10 inches wide by 12-7/8 inches high, cold rolled steel, enamel finish.

(b) Cylinder; chrome plated steel; glove holders anodized aluminum.

(c) Cylindrical support arm for aprons, 2-1/2 inch diameter by 27 inches long.

(d) Vertical holders (2) for gloves.

7.1.3 Disposition: Install where indicated on drawings.

7.2 Item X-1100, Bin, Film Loading, Radiographic Film:

7.2.1 Bin shall be a cabinet suitable for storing and sorting open, unexposed boxes of medical radiographic film. Cabinet finished dimensions approximately 18 to 19 inches long (across face), from 15 to 22 inches wide (front to back), and 34-1/2 to 36 inches high.

7.2.2 Include the following:

(a) Base cabinet section fabricated of carbon steel, with finishes sides, complete with raised base.

(b) Swing-out bin, flush mounted, with exposed to exterior front panel plainly marked "FILMS". Counterbalance unit mount with continuous piano type hinge along lower edge.

(c) Spacers, built-in dividing bin into 6 equal compartments each approximately 15-1/2 inches wide x 2-1/4 inches front to back x 20 inches deep.

(d) Inserts, at least 5, removable, suitable for adapting the divided spaces to accept film boxes in sizes of 4 x 5 inches, 5 x 7 inches, 6-1/2 x 8-1/2 inches, 8 x 10 inches, 7 x 17 inches, 9-1/2 x 9-1/2 inches, 10 x 12 inches, 11 x 14 inches, and 14 x 17 inches, all with box tops flush with top of bin.

(e) Limit switch, 300 volt, 60 Hz, AC, located in cabinet back, ready for connecting in series with darkroom white light so that these lights will be automatically extinguished when bin is opened.

7.2.3 Disposition: Install where indicated on drawings.

7.3 Item X-1600, Transfer Cabinet, Cassette:

7.3.1 Transfer cabinet shall be a four door, double compartment unit, suitable for through the wall transfer of radiographic film cassettes, approximately 24-3/4 inches high x 23 inches long (across face) x 19 inches wide (front to back).

7.3.2 Include the following:

(a) Automatic interlock doors, preventing both doors of a common compartment from being opened at the same time.

(b) Label Doors: "EXPOSED" and "UNEXPOSED".

(c) Automatic signal device, activated when one or more standard 5 x 7 inch or larger cassettes are in respective compartment, including a plug-in type transformer with 6-foot line cord. Signal consisting of the following:

(1) Light system, mounted over doors of transfer cabinet, consisting of a white light on side of transfer cabinet opposite darkroom, lighted when compartment designated as "unexposed" is occupied and a colored light on darkroom side of box, lighted when compartment designated as "exposed" is occupied.

(2) Colored light including an adjustable dimmer. The light safe for up to 2 minutes to unprotected high-speed medical radiographic films when exposed at a distance of 24 inches from light source and light is set at maximum intensity.

(d) Voice passage, light and radiation baffled.

(e) Installation accessories including rough-in frame, brackets and trim.

(f) Lead lining, providing protection of complete assembly equal to or greater than protection at wall within which it is indicated, 1/16 inch minimum.

7.3.3 Disposition: Install where indicated on drawings.

7.4 Item X-3800, Illuminator, Radiographic Film, Single Panel:

7.4.1 Illuminator shall be a non-explosionproof, single panel, wall recessed, fluorescent fixture, overall dimensions approximately 20 inches high x 19 inches across face x 5 inches front to back, conforming to GG-I-446, Type IV units.

7.4.2 Include the following:

(a) Finish of front metal trim, enameled steel.

(b) Trim for recessed installation.

(c) Service Characteristics: 120 volt, 60 Hz, AC; low leakage ballast.

7.4.3 Disposition: Install where indicated on drawings.

7.5 Item X-3830, Illuminator, Radiographic Film, Single Panel:

7.5.1 Illuminator shall be non-explosionproof, single panel, wall surface mounted, fluorescent fixture, overall dimensions approximately 18 inches high x 13 inches across face and 5 inches front to back, conforming to GG-I-446, for Type I units.

7.5.2 Include the following:

(a) Exposed finish of case, enameled steel.

(b) Line cord, 3 wire with grounded plug.

(c) Mounting hardware.

(d) Service Characteristics: 120 volt, 60 Hz, AC; low leakage ballast.

7.5.3 Disposition: Install where indicated on drawings.

7.6 Item X-3900, Illuminator, Radiographic Film, Double Panel:

7.6.1 Illuminator shall be a non-explosionproof, double panel, wall recessed, fluorescent fixture, overall dimensions approximately 20 inches high x 30 inches across face x 5 inches front to back, conforming to GG-I-446, for Type IV units.

7.6.2 Include the following:

(a) Finish of front metal trim, enameled steel.

(b) Trim for recessed installation.

(c) Service Characteristics: 120 volt, 60 Hz, AC; low leakage ballast.

7.6.3 Disposition: Install where indicated on drawings.

7.7 Item X-3930, Illuminator, Radiographic Film, Double Panel:

7.7.1 Illuminator shall be a non-explosionproof, double panel, wall surface mounted, fluorescent fixture, overall dimensions approximately 18 inches high x 27 inches across face x 5 inches front to back, conforming to GG-I-446, for Type III units.

7.7.2 Include the following:

(a) Exposed finish of case, enameled steel.

(b) Line cord, 3 wire with grounded plug.

(c) Mounting hardware.

(d) Service Characteristics: 120 volts, 60 Hz, AC; low leakage ballast.

7.7.3 Disposition: Install where indicated on drawings.

7.8 Item X-3960, Illuminator, Radiographic Film, Eight Panel:

7.8.1 Illuminator shall be an assembly of two 4-film size non-explosionproof continuous surface viewing units mounted in tandem (4 over 4) with wall bracket assembly and the bottom view panels tilted approximately 45 degrees from vertical; overall dimensions approximately 40 inches high x 60 inches across face x 20 inches front to back; conforming to GG-I-446, for Type II units.

7.8.2 Include the following:

(a) Exposed metal surfaces of enameled steel.

(b) End panels fabricated of either plastic laminate covered particle board or enameled steel.

(c) Shelf integral with assembly, located below bottom illuminator, approximately 20 inches front to back for the full length of unit, suitable for use in making notes and temporary holding of films not on viewer.

(d) Switches, including one for each section on each illuminator and two sets of remote switches, located under or on shelf.

(e) Wall mounting hardware.

(f) High intensity spot viewer device, manual type.

(g) Line cord, 3 wire with grounded plug.

(h) Service Characteristics: 120 volt, 60 Hz, AC; low leakage ballast.

7.8.3 Disposition: Installation where indicated on drawings.

7.9 Item X-4000, Illuminator, Radiographic Film, Four Panel:

7.9.1 Illuminator shall be explosionproof, four film size, wall recessed, fluorescent fixture, approximate overall dimensions of 28-1/2 inches high x 60-3/4 inches across face x 6 inches front to back; conforming to GG-I-446, for Type IV units.

7.9.2 Include the following:

(a) Front metal frame and trim, enameled steel.

(b) Trim for recessed installation.

(c) Diffusing panel, shatterproof.

(d) Power Characteristics: 120 volt, 60 Hz, AC. Wiring shall enter unit through top, more than 5 feet above finished floor; low leakage ballast.

7.9.3 Disposition: Install where indicated on drawings.

7.10 Item X-4010, Illuminator, Radiographic Film, Four Panel:

7.10.1 Illuminator shall be a non-explosionproof, four film size, wall surface mounted, fluorescent fixture, approximate overall dimensions of 20 inches high by 62 inches across face by 5 inches front to back, conforming to GG-I-446, for Type IV units.

7.10.2 Include the following:

(a) Exposed surface of case, enameled steel.

(b) Line cord, 3 wire with grounded plug.

(c) Service Characteristics: 120 volt, 60 Hz, AC; low leakage ballast.

7.10.3 Disposition: Install where indicated on drawings.

DE-8

7.11 Item X-7700, Tank, Developing, Radiographic Film:

7.11.1 Tank assembly, refrigerated type, non-splashproof, single compartment unit, for manually developing, fixing and washing medical radiographic films; approximate overall dimensions of 40 inches high by 20 inches from front to back. Conform to WW-P-541/7 and ASTM A167.

7.11.2 Include the following:

(a) Cabinet construction, Type 316 stainless steel, heli-arc welded and chemically passivated, with tank insulated, assembly reinforced and legs provided with corrosion resistant adjustable leveling feet.

(b) Refrigeration unit, integrally located, mounted on appropriate isolators, including thermostatic control, water cooled condenser and cooled water storage tank; capable of delivering up to 25 GPH 68 degree F. water when incoming water is 80 degrees F.

(c) Waste piping, pre-installed, acid resistant, including overflow drain, drain valve, couplings and fittings.

(d) Inserts, solution tanks, two, each with 5 gallon capacity.

(e) Tank covers, for covering full tank opening and all inserts, Type 316 stainless steel.

(f) Valve, thermostatic, WW-P-541/7, Type T, assembly for wall surface mounting, 1 through 5 GPH at 45 psi, with integral dial thermometer, diverter valve and spray hose unit for cleaning tank and components.

7.11.3 Service Characteristics:

(a) Cold water, 1/2 inch NPT.

(b) Drain, 1-1/2 inch NPT.

(c) 120 volt, 60 Hz AC.

7.11.4 Disposition: Install where indicated on drawings.

7.12 Item M-5581, Sink, Print, Photographic:

7.12.1 Sink, Photographic, for processing prints, 20 inch by 24 inch tray capacity, Model B-3072; 35-1/2 inches deep, 75-1/2 inches wide, and 7-inch high sink section; unit 36 inches high with 4-inch high backsplash. Conform to ASTM A167.

7.12.2 Include the following:

(a) Type 316 stainless steel including stand.

(b) 3-inch thick backsplash for plumbing.

(c) 1/2-inch thick bottom insulation.

(d) Flat and level sink bottom.

(e) Recessed stainless steel drains.

(f) Stainless steel stand with gussets for shelving and four point leveling feet.

(g) Thermostatic valve WR-3; 1/2-inch hot and cold water lines, 1-1/2 inch drain.

7.12.3 Disposition: Install where indicated on drawings.

7.13 Item M-5582, Washer, Print, Automatic:

7.13.1 Washer for Automatic Processing of Prints; capacity of 150 prints, 8 x 10 inch, at one time; Model M-4, stainless steel stand.

7.13.2 Include the following:

(a) Type 316 stainless steel construction.

(b) Cylinder, C.R.S.

(c) Seamless, smooth, polyethylene tank.

(d) Triple action print washing; mechanical, hydraulic and pneumatic.

(e) Automatic controls.

(f) Electrical characteristics, 115 volt, 1 phase, 60 Hz.

(g) 1/2 inch cold water line, 1/2 inch hot water line.

(h) Drain, 1-1/2 NPT.

7.13.3 Disposition: Install where indicated on drawings.

7.14 Item M-5579, Processor, Film, Color:

7.14.1 Processor for Color Film for Medical Photography: 3-1/2 gallon capacity for sheet and roll film. Model CP-823 with stainless steel stand and base; 26 inches deep, 44-1/2 inches wide, and 54 inches high. Provide air compressor.

7.14.2 Include the following:

(a) Type 316 stainless steel construction.

(b) Heliarc welded water jacket and tank.

(c) Automatic 7 gallon GPM thermostatic valve.

(d) Process tanks including light-tight covers.

(e) Quick dump wash tank.

(f) P.V.C. drain manifold.

(g) Solid-state gas burst time, adjustable.

(h) P.V.C. water inlet and recirculation fittings.

(i) Gas burst distributors, built-in, to each tank.

(j) Recirculation system, P.V.C., factory installed fittings.

(k) Internal plumbing fittings, for nitrogen/air and water; sweat solder copper.

(l) Insulated water jacket.

(m) Adjustable nitrogen/air controls.

(n) Combination rack for sheet and roll film.

(o) Air compressor, oil free, remote location:

(1) Automatic nitrogen/air system; with piping installed from compressor to two remote processors.

(2) 5184 cubic inches of air delivered to 10-gallon tank.

(3) Automatic pressure switch; on at 35 psig and off at 50 psig.

(4) Compressor mounted on 12 gauge ASME tank.

(5) Thermal protection for single phase motor.

(6) Filter, safety valve, gauge, pressure switch, shut-off valve, and check valve.

(7) Nitrogen/air timer.

(p) Controls and starters.

7.14.3 Service characteristics:

(a) 1/2-inch cold water line, male (processor).

(b) 1/2-inch hot water line, male (processor).

(c) 1/2-inch nitrogen/air lines, compressor to processors.

(d) 1-1/2-inch drain, (processor).

(e) 115 volt, 50/60 cycle, 5 amp, AC (processor).

(f) 208 volt, 1 phase, 60 Hz, AC (compressor motor).

7.14.4 Disposition: Install where indicated on drawings.

XX-15 7.15 Item X-5300, Processor, Film, X-Ray:

7.15.1 Processor shall be suitable for automatically developing, fixing, washing and drying medical radiographic films at 90 seconds per film, at least 230, 14 inch by 17 inch films per hour. A cabinetized unit, roller transport type, for locating in a lighted room and be fed from a darkroom through an opening in the wall.

7.15.2 Include the following:

(a) Cabinet with chemical resistant finish and removable panels to facilitate servicing.

(b) Controls, automatic, accessible from feed side of unit. Include integral or separate power switch and replenisher status indicators.

(c) Water saver controls, accessible from feed side of unit, to reduce water demand.

(d) Valve, thermostatic, WW-P-541/7, Type T, for wall surface mounting, 1 through 5 GPM at 45 psi, with integral dial thermometer.

(e) Exhaust hose, flexible, acid fume resistant tubing, at least 10 feet long.

(f) Provide for attachment and connection to silver recovery system.

(g) Chemical supply tubing, plastic, resistant to harm from chemicals, to run from chemical tank spout to processor fitting in underfloor conduit installed by other trades.

(h) Lightproof stripping, compressible foam, resilient material suitable for application to either the perimeter of rough opening or edge of unit's face. Apply so that, with processor placed against opening, this material will provide a lightlock.

(i) Pipe and fittings, PVC, to assemble as an "L" shaped line connected to face of processor at waste opening, allowing waste flushed from processor to discharge directly over floor drain. Install to provide a 1 inch minimum air gap between discharge end of pipe and drain.

(j) Service Characteristics:

(1) Electrical: 120/208 volt, 60 Hz, 3 wire, AC.

(2) Hot and cold water, to thermostatic valve with at least 30 but not more than 65 pounds pressure.

(3) Floor drain, 2 inches, interrupted.

(k) Filters, installed between mixing valves and the processor.

7.15.3 Disposition: Install where indicated on drawings.

XX-16 7.16. Item X-5301, Processor, Film, X-Ray:

7.16.1 Automatic Processor fitted for addition and connection to Government furnished daylight processing system. Processor shall be freestanding.

7.16.2 Include the following:

(a) Processor shall be as previously specified in this section, paragraphs 7.15 thru 7.15.2 (omit requirements of 7.15.2 h and k).

(b) Adaptors and accessories required for compatible and permanent connection to Daylight Processing System.

(c) Vent, water and drain lines installed under unit and thru the floor.

7.16.3 Disposition: Install where indicated on drawings.

XX-17 7.17 Item X-5302, Processor, Film, X-Ray:

7.17.1 Automatic Processor fitted for attachment and connection to Government furnished chest x-ray apparatus. Processor shall be freestanding on three sides and connected to chest unit at film receiving end.

7.17.2 Include the following:

(a) Processor shall be as previously specified in this section, paragraphs 7.15 thru 7.15.2 (omit requirement of 7.15.2 h).

(b) Adaptors and accesories required for compatible and permanent connection to chest x-ray apparatus.

(c) Vent, water and drain lines installed under the unit and thru the floor.

7.17.3 Disposition: Install where indicated on drawings.

7.18 Item X-7951, Tank Replenisher:

7.18.1 Replenisher Tank for chemicals to service automatic processors, remote location, 55 gallon capacity.

7.18.2 Include the following:

(a) Top lid.

(b) Spout.

(c) Plastic tank construction.

7.18.3 Disposition: Install in precast terrazzo receptors where indicated on drawings.

7.19 Item X-7952, Tank, Replenisher:

7.19.1 Replenisher Tank for chemicals to service automatic processors, remote location, 14 gallon capacity.

7.19.2 Include the following:

(a) Top lid.

(b) Spout.

(c) Plastic tank construction.

7.19.3 Disposition: Install in precast terrazzo receptors where indicated on drawings.

7.20 Item X-1500, Holder, X-Ray Film Cassette: (Category "E1" Equipment, Refer to Section 11797 par. 6.17).

7.20.1 Holder, wall mounted with inch scales, for supporting cassettes in the vertical position.

7.20.2 Include the following:

(a) Enameled steel and stainless steel construction, UL and CSA listings.

(b) Grid holder.

(c) Spring action vertical lock.

(d) Carriage safety interlock switch.

(e) Approximate size: 13-1/2 inches wide by 50 inches high by 4-1/2 inches deep.

(f) Inch and centimeter scale height indicators and grid channels.

7.20.3 Disposition: Where units are indicated on drawings, provide wall reinforcing for high and low attachment.

7.21 Item M-5580, Processor, Film, Black and White:

7.21.1 Film Processor, for black and white, sheet or roll film, 3-1/2 gallon capacity. Model BW-814 with stainless steel stand and base; 26 inches deep, 44-1/2 inches wide, and 54 inches high.

7.21.2 Include the following:

(a) Type 316 stainless steel construction.

(b) Nitrogen burst system, 3 tanks, one wash.

(c) Internally braced, heliarc welded, tank leveling shelves, copper piping, with internal fittings connected.

(d) P.V.C. burst distributors.

(e) Base leveling screws.

(f) Four process tanks, one wash.

(g) Distributors installed on each tank.

(h) Pressure regulator.

(i) Individual shut-off valves, each gas burst tank.

(j) Adjustable timers; off/on continuous switch.

(k) Automatic temperature control; water output gauge; volume control valves; auxiliary tempered water outlet; vacuum breakers installed.

(l) Rotary, quick dump valve.

(m) Sheet and roll film racks.

7.21.3 Service characteristics:

(a) 1/2-inch hot and cold water lines to temperature control.

(b) 1/2-inch gas connection to remote air compressor.

(c) 1-1/2-inch drain, I.P.S.

(d) 115 volt, 50/60 cycle, 5 amp, AC.

7.21.4 Disposition: Install where indicated on drawings.

7.22 Item M-5583, Water Chiller, Print Sink:

7.22.1 Water Chiller for Temperature Control Devices and Processing Sinks: Unit encased in stainless steel housing, 14-1/4 inches deep, 33-3/4 inches wide, and 16-1/8 inches high. Deliver 68 degree F. water automatically to sinks from 85 degree incoming water, factory set.

7.22.2 Include the following:

(a) Condenser, water-cooled, hermetically sealed.

(b) Holding tank, stainless steel, 9 gallon capacity.

(c) Temperature control, automatic.

(d) Mixing valves and bypass valves.

(e) Internal thermostat, adjustable.

(f) Piping from unit to sinks, installed.

7.22.3 Service Characteristics:

(a) 3/8-inch water input.

(b) 3/8-inch cold water output, drain.

(c) 1/2-inch input drain, condenser.

(d) 115 volt, 50/60 cycle, 1 phase, 11 amp, AC.

7.22.4 Disposition: Install where indicated on drawings.

---END---

SECTION 11797. GOVERNMENT FURNISHED MEDICAL AND DENTAL EQUIPMENT, CONTRACTOR ROUGH-IN AND GOVERNMENT INSTALLED, AND CONTRACTOR INSTALLED

1. DESCRIPTION: This section includes the rough-in for Government furnished and Government installed equipment, and the installation of Government furnished equipment not specified under section entitled "Government Furnished and Contractor Installed Existing Medical Equipment".

2. RELATED WORK SPECIFIED ELSEWHERE:

2.1 General Requirements: Conform to all provisions of section entitled "General Requirements for Medical Equipment".

2.2 Service Connections to Equipment: Final utility connections to equipment under this section (including waste) are provided under the relevant sections of this specification governing the utility.

2.3 Items Installed by Other Sections: Items installed under other sections are so designated under the specific item.

3. SUBMITTALS:

3.1 Manufacturer's descriptive literature including connection requirements and operating instructions will be furnished to the Contractor by the Contracting Officer upon delivery of the equipment to the Contractor, including available shop drawings.

3.1.1 Contractor shall verify job conditions affecting the work, including job measurements, rough-in requirements, and relation to work of other trades. Coordinate provided shop drawings.

4. EQUIPMENT:

4.1 Government Furnished, Government Installed Equipment:

4.1.1 Rough-in items scheduled as Government furnished and Government installed equipment, items scheduled Category "E1", refer to specific item under articles entitled "ITEM" in this section for extent of requirements.

4.2 Government Furnished, Contractor Installed Equipment:

4.2.1 Install items scheduled as Government furnished and Contractor installed equipment, items scheduled Category "E2", refer to specific item under articles entitled "ITEM" in this section for extent of requirements.

4.2.2 Work includes labor, transportation, materials, tools, appliances, and utilities necessary.

5. ROUGH-IN; INSTALLATION:

5.1 General: The following requirements apply as applicable to the Category of the equipment furnished, "Category E1 and E2" as defined hereinbefore, the Contractor is responsible for rough-in only of Category "E1" equipment, and responsible for rough-in and installing of Category "E2" equipment.

5.1.1 Coordinate work of this section with related work of other sections whose work abuts, adjoins, or is in any way affected by or related to work under this section, to obtain proper installation of all items.

5.1.2 Verify pipe connection sizes and locations shown on the plans and any available roughing-in diagrams with the actual equipment to be installed.

5.2 Protection for Equipment and Materials:

5.2.1 Utilities: Close pipe openings with caps or plugs and protect electrical work as necessary.

5.2.2 Equipment: Tightly cover and protect equipment against dirt, water, and mechanical or chemical injury.

5.2.3 Damage to Government property due to fault or negligence of the Contractor shall be repaired or replaced at no additional expense to the Government.

5.3 Equipment Installation - General:

5.3.1 Locations: The location of the Government furnished equipment is indicated on the drawings.

5.3.2 Roughing-In: Rough-in utility service at walls, ceilings, or floors as necessary for each piece of equipment.

5.3.3 Installation: Install equipment as directed by the equipment manufacturer. Work shall be assembled and installed in harmony with other trades.

5.4 Cutting and Repairing:

5.4.1 Work shall be carefully laid out in advance.

5.4.2 Make repairs to piping with new materials. No caulking or screwed joints or holes acceptable.

6. ITEMS (CATEGORY "E1" EQUIPMENT) (Rough-in only):

6.1 Item X-5350, Processor, Film, Rad. Dental:

6.1.1 Automatic table model for processing dental x-ray film with thermostatic mixing valve, electric plug-in. Provide 3/8 inch hot and cold water cocks with serrated tips in wall over countertop.

6.1.2 Disposition: Provide utility services where indicated on drawings.

6.2 Item X-6450, X-Ray Apparatus, Dental:

6.2.1 Wall mounted dental radiographic unit; 15 MA, 90 KVP, 120 volt, 60 Hz, AC; 2100 watts; wall mounted control unit located separate from wall mounted folding bracket.

6.2.2 Disposition: Reinforce walls to support wall mounted radiographic unit as indicated on drawings. Empty conduit, wall boxes and electrical services shall be provided and installed where indicated on drawings. Surround built-in wall boxes with lead protection.

6.3 Item X-6500, X-Ray Apparatus, Dental Panographic:

6.3.1 Radiographic unit, dental, panographic, 10 MA, 9 KVP, 110 volt, 10 amp, 2400 watts; motor driven chair.

6.3.2 Disposition: Empty conduit and boxes in walls and floor, and electrical service shall be provided and installed where indicated on drawings. Surround wall boxes with lead protection.

6.4 Item X-6171, X-Ray, Heavy duty fluroscopic unit with single plane:

6.4.1 X-ray apparatus, fluroscopic unit with single plane, special procedures, 850 MA, 150 KVP, 600 volt, 100 amp, 60 Hz, three phase, 12 pulse, AC, including accessories.

6.4.2 Disposition: Empty conduit and boxes in walls, ceiling and floor; main cut-off switch and electrical service at proper voltage; and lead protection surrounding wall boxes shall be provided and installed where indicated on drawings.

6.5 Item X-6200, X-Ray Apparatus, Radiography:

6.5.1 X-ray apparatus for General Radiography, 600 MA, 120 KVP, 60 Hz, 480 volt, 100 amp, three phase AC, including accessories. Federal Specification No. GG-X-635D.

6.5.2 Disposition: Empty conduit and boxes in walls, ceiling and floor; main cut-off switch and electrical service at proper voltage; lead protection surrounding wall boxes shall be provided and installed where indicated on drawings.

XR-11 6.6 Item X-5100, X-Ray Chest Unit, 600/800 MA:

6.6.1 Automatic chest unit, freestanding, floor mounted, with tube stand, changer and transporter system for use with Daylight Processing System. Up to 1000 MA at 100 KVP and 600 MA at 150 KVP, MA and KVP selections; generator rated at 100 KW. 480 volt, three phase, 60 Hz, 100 amp, AC, including accessories.

6.6.2 Disposition: Empty conduit and boxes in walls and floor; main cut-off switch and electrical service at proper voltage shall be provided and installed. Provide underfloor vent, water and drain line to service automatic processor attached to this unit. Install where indicated on drawings.

6.7 Item X-6800, X-Ray, 800 MA, Rad/Fluo/TV:

6.7.1 X-ray apparatus, radiographic and fluoroscopic with television chain and video tape recorder; 850 MA, 150 KVP; 600 volt, 100 amp, 60 Hz, three phase, AC, 12 pulse, including accessories.

6.7.2 Disposition: Empty conduit and boxes in walls, ceiling and floor; main cut-off switch with electrical service at proper voltage; lead protection surrounding wall boxes shall be provided and installed where indicated on drawings.

6.8 Item X-6530, X-Ray, 600 MA, Urological:

6.8.1 X-ray apparatus, urological, radiographic for cystoscopic rooms; 300 MA, 150 KVP, 230 volt, single phase, 60 Hz, 195 amp, AC, with 45 KVA maximum, including accessories.

6.8.2 Disposition: Empty conduit and boxes in walls and floor; main cut-off switch and electrical service at proper voltage; lead protection surrounding wall boxes shall be provided and installed where indicated on drawings.

6.9 X-Ray Apparatus Accessories:

6.9.1 Accessories for x-ray apparatus including transformers, generators, control panels, rotor controls, universal system cabinets, flurocon cabinets, F.C. programmers and automatic collimators, etc. are located and identified on the drawings and equipment schedules.

6.9.2 Disposition: Provide lead protection for devices in lead-lined walls; floor cut-outs in slabs for boxes; closure, trim and furring for x-ray accessories and cabinets which are shown recessed and flush with finished walls. Provide wall reinforcing and install trim closure strips and furring for recessed equipment.

6.10 Item X-1717, Cassette, Unloader, Daylight:

6.10.1 Cassette Unloader, Daylight, freestanding, mobile, approximately 21 inches deep, 28 inches wide and 41 inches high, complete with transport feeder.

6.10.2 Disposition: Provide electrical outlet for each unit with 110 volt, 60 Hz, AC, one phase service. Install where indicated on drawings.

6.11 Item X-1711, Dispenser, Film, 14 Inches by 17 Inches, Day:

6.11.1 Dispenser for 14 inch by 17 inch film, Daylight System, wall mounted, 100 film capacity, 9-1/3 inches deep by 21-1/2 inches wide by 51-7/12 inches high.

6.11.2 Disposition: Provide 115 volt, 60 Hz, one phase, AC, 2 amp electrical service for unit. Surround electrial box with lead protection when located in lead-lined walls. Install service to units where indicated on drawings.

6.12 Item X-1712, Dispenser, Film, 11 Inches by 14 Inches:

6.12.1 Dispenser for 11 inch by 14 inch film, Daylight System, wall mounted, 100 film capacity, 9-1/3 inches deep by 21-1/2 inches wide by 51-7/12 inches high.

6.12.2 Disposition: Provide 115 volt, 60 Hz, one phase, AC, 2 amp electrical service for unit. Surround electrical box with lead protection when located in lead-lined walls. Install service to units where indicated on drawings.

6.13 Item X-1713, Dispenser, Film, 10 Inches by 12 Inches.

6.13.1 Dispenser for 10 inch by 12 inch film, Daylight System, wall mounted, 100 film capacity, 9-1/3 inches deep by 17-1/2 inches wide by 44 inches high.

6.13.2 Disposition: Provide 115 volt, 60 Hz, one phase, AC, 2 amp electrical service for unit. Surround electrical box with lead protection when located in lead-lined walls. Install service to units where indicated on drawings.

6.14 Item X-1715, Dispenser, Film, 8 Inches by 10 Inches:

6.14.1 Dispenser for 8 inch by 10 inch film, Daylight System, wall mounted, 100 film capacity, 9-1/3 inches deep by 17-1/2 inches wide by 44 inches high.

6.14.2 Disposition: Provide 115 volt, 60 Hz, one phase, AC, 2 amp electrical service for unit. Surround electrical box with lead protection when located in lead-lined walls. Install service to units where indicated on drawings.

6.15 Item X-9800, System, Diagnostic, Ultra Sound:

6.15.1 Diagnostic Ultra Sound System, mobile, electrically operated, 120 volt, 60 Hz, AC. For use in Nuclear Medicine and OB/GYN Clinics. Consists of motorized bed and scanner, and separate electronics console, for imagining in Echoencephalography, Echocardigraphy, and Echotomography (A/Mode, M/Mode and B/Scan).

6.15.2 Disposition: Provide electrical service and wall outlet where indicated on drawings.

6.16 Item M-5545, Irradiation Treatment Booth:

6.16.1 Unit consists of a folding light cabinet to provide uniform body surrounding exposure from UVA lamps for dermatological therapy. Conform to NFPA.

6.16.2 Service Characteristics:

(a) 120 Volt, 1 phase, 3 wire grounded for plug in of pigtail cord attached to unit.

6.16.3 Disposition: Provide electrical service and wall outlet where indicated on drawings.

6.17 Item X-1500, Holder-Xray Film Cassette:

6.17.1 Holder, wall mounted, with inch scales, for supporting cassettes in the vertical position. Unit to be integrated with the automated columnation system on x-ray equipment.

6.17.2 Disposition: Provide wall reinforcement for attachment of units.

7. ITEMS (CATEGORY "E2" EQUIPMENT): (Rough-in and installation)

7.1 Item S-4770, Sterilizer, Instrument, Steam:

7.1.1 Sterilizer shall be direct steam heated, single door cabinet, freestanding, with 16 inch by 16 inch by 26 inch chamber unit. Suitable for sterilization of packs, wrapped and unwrapped instruments or utensils and flasked liquids, utilizing steam as the sterilizing agent. Approximately 73 inches high, 24 inches wide and 25 inches deep. Equipped with automatic controls and instrumentation.

7.1.2 Service Characteristics:

(a) Electrical: 120 volt, 60 Hz, one phase, AC.

(b) Steam: 3/8 inch NPT (50 to 80 psig); return 3/8 inch NPT

(c) Cold Water: 3/8 inch NPT (20 to 50 psig).

(d) Drain: 1 1/2 inch ODT.

(e) Condensate to waste.

7.1.3 Disposition: Install where indicated on drawings.

7.2 Item M-9050, Cleaner, Washer, Ultrasonic:

7.2.1 Washer-Cleaner Ultrasonic (solid state generator) type, washer-cleaner, two compartment (washer and rinse/dryer), freestanding console, approximately 60 inches wide by 24 inches to 30 inches deep (front to back) by 39 inches high, for cleaning metal, glass, plastic or rubber, meeting FCC and OSHA standards.

7.2.2 Service Characteristics:

(a) Cold Water: 3/4 inch NPT (30 to 60 psig).

(b) Hot Water: 3/4 inch NPT (30 to 60 psig), 140 to 160 degrees F.

(c) Deionized Water: 1/2 inch NPT (40 to 60 psig), Type 1.

(d) Waste: 1-1/2 inch.

(e) Electrical: 208 volt, 60 Hz, one phase, AC, 45 amp, neutral and ground power plug and outlet.

7.2.3 Disposition: Install where indicated on drawings.

ST-3 7.3 Item S-2200, Sterilizer, Pre-Vacuum, Steam, Mechanical Air Removal, with Carts:

7.3.1 Sterilizer shall be a steam heated, mechanical air removal type, double door unit, recessed through two walls, pre-vacuum, rectangular chamber, 24 inches wide by 36 inches high by 48 inches deep. A unit suitable for sterilization of packs, wrapped and unwrapped instruments and utensils and flasked liquids, utilizing steam saturation as the sterilizing agent; unit conforming to GG-S-1343, Size 3, Style D; equipped with automatic condenser, automatic controls and instrumentation.

7.3.2 Service Characteristics:

(a) 208/440 volts, 60 Hz, three phase, AC for vacuum pump.

(b) 120 volts, 60 Hz, single phase, AC for automatic controls.

(c) 120 volt, 60 Hz, single phase, AC for unit.

(d) Cold and Hot Water: 3/4 inch.

(e) Steam Supply and Return: 1/2 inch.

(f) Condensate return to source.

(g) Waste Drain: 1-1/2 inches.

7.3.3 Disposition: Install where indicated on drawings, including trim and closure strips, tops and sides, both wall faces.

7.4 Item S-1010, Sterilizer, Dry Heat, Electric:

7.4.1 Sterilizer shall be an electrically heated, gravity convection type, floor mounted unit with chamber size of approximately 19 inches by 14 inches by 19 inches, unit suitable for processing heat stable and moisture labile materials, using dry heat as the sterilizing agent. Cabinet 29 inches by 23 inches by 64 inches. Equipped with automatic controls and instrumentation.

7.4.2 Service Characteristics:

(a) 208 volt, three phase, 60 Hz, AC; controls, 110 volts, 60 Hz, one phase, AC.

(b) Provide a main power switch or a button "off" switch that will shut off all electrical power.

7.4.3 Disposition: Install where indicated on drawings.

ST-5 7.5 Item S-3131, Sterilizer, Ethylene Oxide:

7.5.1 Sterilizer shall be a gas type, double door, recess mounted through two walls, rectangular chamber, 24 inches wide by 36 inches high by 48 inches deep; an automatically controlled unit for sterilizing heat and moisture sensitive items, using a mixture of ethylene oxide and halogenated hydrocarbons as the sterilizing agent; equipped with automatic controls and instrumentation. Unit shall conform to GG-S-1344 for Size 4, Style D.

7.5.2 Service Characteristics:

(a) Steam supply and (vented) condensate line,: 1/2 inch, (50 to 80 psig, supply).

(b) Drain/waste: 1-1/2 inches.

(c) Cold Water: 1/2 inch, 20 to 50 psig.

(d) Gas Connection: 1/2 inch.

(e) Condensate to waste, 1/2 inch.

(f) Connect item to dual gas cylinders at locations shown.

(g) Electrical: For controls, 120 volt, 60 Hz, AC; for vacuum pump motor, 208 volt, 60 Hz, three phase, AC.

7.5.3 Disposition: Install where indicated on drawings including trim and closure strips. Supervise installation and testing. Provide tops and sides, both wall faces.

ST-6 7.6 Item S-7640, Aerator, Gas:

7.6.1 Aerator shall be a single door, rectangular chamber, 24 inches wide by 36 inches high by 60 inches deep, recess mounted unit for non-pressurized removal of ethylene oxide and freon gas from heat and moisture labile materials processed in ethylene oxide sterilizers. Equipped with automatic controls and instrumentation. Cabinet, front to back, 70 inches.

7.6.2 Service Characteristics:

(a) Electrical: 208 volt, 60 Hz, 20 amp, three phase, AC; controls, 120 volt, 60 H_3, one phase, AC.

(b) Vent: 2-1/2 inches.

7.6.3 Disposition: Install where indicated on drawings, including trim and closure strips, top and sides.

ST-7 7.7 Item S-4455, Washer/Decontaminator (Includes Conveyors):

7.7.1 Automatic pass-thru two door steam sterilizer designed to feed, load, steam decontaminate and sterilize, and unload processing baskets; chamber size, approximately 36 inches wide by 24 inches high by 29 inches deep, or 25 inches wide by 18 inches high by 30 inches deep. Includes installation of conveyors at loading and unloading ends.

7.7.2 Service Characteristics:

(a) Electrical: 208 volts, three phase, 60 Hz, AC; controls, 120 volt, 60 Hz, one phase, AC.

(b) Steam: 1 inch, 50 to 80 psi.

(c) Cold Water: 1 inch, 60 to 80 psi.

(d) Deionized Water: 1 inch, 20 to 50 psi.

(e) Air: 1/2 inch, 80 psi.

(f) Drain, 1 1/2 NPT

7.7.3 Disposition: Install where indicated on drawings, including trim and closure strips, top and sides, both wall faces.

7.8 Item S-4172, Cleaner, Pressure Sensitive Materials:

7.8.1 Cleaner/Decontaminator system for anesthesia and respiratory therapy equipment, floor mounted, freestanding stainless steel cabinet approximately 30 inches wide by 24 inches deep by 36 inches high with above top control panel. Equipped with automatic controls and instrumentation and a complete self contained, chemical solution decontamination system.

7.8.2 Service Characteristics:

(a) Electrical: 115 volts, 60 Hz, one phase, AC, 15 amp.

(b) Water: 1/2 inch NPT hot water, and 1/2 inch NPT cold water supply, with cut-off valves.

(c) Drain: 3 inch standpipe drain for solutions and water hose drains.

7.8.3 Disposition: Install where indicated on drawings, including closure trim.

7.9 Item S-1220, Sterilizer, Steam:

7.9.1 Sterilizer shall be direct steam heated, single door, freestanding cabinet with 20 inch by 20 inch by 38 inch chamber unit. Suitable for processing laboratory supplies, culture media, contaminated waste and other heat and moisture stable materials at temperatures of 100 to 132 degrees C, streaming steam (non-pressure) at 100 degrees C, and heat-coagulable and heat sensitive materials between 78 and 104 degrees C. Cabinet size, approximately 30 inches wide by 40 inches deep by 75 inches high. Unit shall conform to Type III, Size 2, Style A, Federal Specification GG-S-1340.

7.9.2 Service Characteristics: (Install and connect.)

(a) Electrical: 120 volts, 60 Hz, single phase, AC.

(b) Steam: 1/2 inch NPT, 50 to 80 psig dynamic.

(c) Steam Return: 1/2 inch NPT to waste.

(d) Water and Drain: 1/2 inch NPT cold water, 20 to 50 psig dynamic; drain, 1-1/2 inch NPT.

7.9.3 Disposition: Install where indicated on drawings.

7.10 Item S-3065, Sterilizer, ETO, Double Door (For future installation):

7.10.1 Sterilizer shall be gas type, double door, recess mounted thru two walls, with rack and shelves, rectangular chamber, 16 inches by 16 inches

by 28 inches; an automatically controlled unit for sterilizing heat and moisture sensitive items using a mixture of ethylene oxide and halogenated hydrocarbons as the sterilizing agent; equipped with automatic controls and instrumentation. Conform to Federal Specification GG-S-1344, Size 1, Style D.

7.10.2 Service Characteristics:

(a) Steam Supply and (Vented) Return: 3/8 inch (50 - 80 psig) supply.

(b) Drain-Waste: 1-1/2 inch ODT.

(c) Cold Water: 3/8 inch (20 - 50 psig).

(d) Gas Connection: 1/2 inch, connect to dual gas cylinders.

(e) Condensate to waste.

(f) Electrical: Controls, 120 volt, 60 Hz, AC; for pump motor and heaters, 208 volt, 60 Hz, three phase, AC.

7.10.3 Disposition: Where this unit is indicated on drawings, cap utilities and services at the floor and provide removable panels on both walls of service chase.

7.11 Item S-3171, Washer, Cart, Automatic:

7.11.1 Cart Washer, Walk-In, Double Door Unit, suitable for automatically washing, rinsing, and drying hospital utility utensils, delivery pick-up and delivery carts, hospital metal equipment, high impact thermoplastic containers, carts and cases. Designed and capable of washing miscellaneous small component thermoplastic parts used in the container carts and cases. Pass-thru model for pit mounting, 108 inches deep, 130 inches wide, and 96 inches high, stainless steel finish exterior panels on three sides.

7.11.2 Service Characteristics:

(a) Chilled Water: 1 inch, 45 degrees F., supply and return.

(b) Hot Water: 3/4 inch NPT, 25 psi, 110 degrees F. minimum.

(c) Steam: 1-1/4 inch NPT, 60 psi, 450 pounds per hour.

(d) Condensate Return: 3/4 inch NPT to source.

(e) Compressed Air: 40/50 psi, 4-5 cfm.

(f) Drain: 3 inch NPT, in sump pit.

(g) Exhaust: Connect to building exhaust outlet.

(h) Electrical: 208 volt, 3 phase, 60 Hz, 4 wire, 39 amp.

7.11.3 Disposition: Install where indicated on drawings, and include construction of sump and drain pit, floor recesses for sliding door tracks, sloping concrete floor in wash chamber painted with epoxy coating, furring from top of unit to ceiling, and closure strips where unit abuts walls and ceilings.

7.12 Item C0071, Sink/Worktop, Prefabricated:

7.12.1 Unit consists of prefabricated sink/work counter with skirts and aprons; exposed parts covered with plastic laminate, metal backsplash; unit approximately 24 inches deep by 48 inches wide; canterlever mounted on wall rails.

7.12.2 Assembly includes:

(a) Prefabricated plastic work top unit.

(b) Stainless Steel Sinks: (Single bowl for units designated AW-1 and two bowls for units designated AW-2 on the drawings.)

(c) Two metal standards, each 6 feet long for vertical surface mounting at 48 inches on center.

(d) One horizontal rail to attach to metal standards for support of canterlevered work top units.

(e) Sink fittings, wrist handles, gooseneck spout, drains, traps, valves, cut-off valves; drain pipe and hot and cold water piping to connect to building stub-outs at wall.

7.12.3 Disposition: Install each unit where indicated on drawings. Installation includes permanent attachment of two vertical standards, surface mounted to walls; attachment of the horizontal rail and the work top unit to the standards; installation of sink bowl (or bowls) in counter top; assembly and installation of all fittings, traps, valves, etc. required for sinks; and connection of hot and cold water, and drain to building stub-outs.

7.13 END

SECTION 11798. PREFABRICATED AUDIOMETRIC ROOMS

1. APPLICABLE PUBLICATIONS: The following publications of the issues listed below, but referred to thereafter by basic designation only, form a part of this specification to the extent indicated by the references thereto:

1.1 Military Specification:

MIL-J-641D Jack, Telephone, General Specification for.

1.2 American Society for Testing and Materials (ASTM) Publications:

A366-72 Steel, Carbon, Cold-Rolled Carbon Sheet, Commercial Quality.

C423-66(1972) Sound Absorption of Acoustical Materials in Reverberation Rooms.

E90-75 Laboratory Measurement of Airborne-Sound Transmission Loss of Building Partitions.

1.3 Veterans Administration Specification (VA):

X-1438A Booth, Audiometric Exam.

2. RELATED WORK SPECIFIED ELSEWHERE:

2.1 General Requirements: Conform to all provisions of section entitled "General Requirements for Medical Equipment".

2.2 Service Connections to Equipment: Final utility connections to equipment under this section shall be provided under section entitled "Interior Wiring Systems".

3. SUBMITTALS: Conform to submittal provisions of section entitled "General Requirements for Medical Equipment", including the following:

3.1 Equipment Lists and Manufacturer's Literature: Seven copies of printed specifications and installation requirements for item M-0300 shall be submitted to and approved by the Contracting Officer.

3.2 Shop Drawings: Dimensional, assembly and service connection detail drawings for item M-0300 shall be submitted to and approved by the Contracting Officer. Submit five sets of shop drawings for each item.

3.3 Certificates: Submit for Item M-0300.

4. MATERIALS AND COMPONENTS: Conform to VA specification X-1438, except as specified otherwise herein.

7. ITEMS (CATEGORY "E2" EQUIPMENT): (Rough-in and Installation)

At the end of paragraph 7.12, add the following new paragraphs:

7.13 Item M-8600, Cabinet, Warming, Blanket and Solution:

7.13.1 Warming Cabinet shall be a two compartment, cabinet mounted, steam heated unit, for storage of solutions and blankets; approximately 24 inches front to back by 30 inches across face by 72 inches high. Unit shall conform to VA Specification X-1437.

7.13.2 Unit includes:

(a) Top and lower compartment, steam heated.

(b) Lower storage compartment with 2 adjustable shelves.

(c) Automatic variable temperature controls, operating from 100 degrees F. to 180 degrees F., including heat light that glows to indicate heater is in operation and oven temperature light with alarm.

(d) Finish of exposed to view surfaces, both interior and exterior of cabinet, including door, shall be of satin finished stainless steel.

(e) Door swing, as indicated on drawings.

(f) Service Requirements:

(1) Steam: 3/8 inch NPT, 30 to 60 psi.

(2) Electrical: 120 volt, 60 Hz, AC.

(3) Condensate, 3/8 inch, return to source.

7.13.3 Disposition: Install where indicated on drawings.

7.14 Item L-2100, Dryer, Laboratory Glassware:

7.14.1 Dryer shall be an electrically heated, freestanding, cabinetized unit, for drying laboratory glassware consisting of petri dishes, beakers, flasks, pipettes and metalware consisting of pans, basins, trays and bowls; overall dimensions 33 inches across face x 30 inches front to back x 76 inches high; conforming to W-O-830, Type II, Class 1, Style 1, except as otherwise specified herein.

7.14.2 Unit includes:

(a) Chamber capacity: At least 26 inches x 26 inches x 55 inches.

(b) Controls, automatic.

(c) Single door, swing as indicated on drawings.

(d) Switch, door heater cut-off.

(e) Service characteristics: 208 volt, 3 phase, 60 Hz, AC.

7.14.3 Disposition: Install where indicated on drawings.

7.15 Item L-3010, Washer, Glassware and Utensil, Steam:

7.15.1 Washer shall be a steam heated, freestanding, cabinetized unit, for washing laboratory glassware consisting of petri dishes, beakers, flasks, pipettes of assorted sizes, and hospital metalware, consisting of bedpans, basins, trays, urinals, bowls, and small cups; overall maximum dimensions 43 inches across face, 35 inches front to back, 80 inches high; conforming to VA Specification X-1417, except as otherwise specified herein.

7.15.2 Unit includes:

(a) Cabinet fabricated of welded stainless steel, with access panel on loading side to facilitate all servicing from front of unit. Exposed to view stainless steel with satin finish.

(b) Wash compartment, enclosed in base cabinet, for liquid detergent, with automatic dispensing system and means for determining detergent level in system.

(c) Load capacity, 26 inches in diameter by 20 inches high.

(d) Door, vertical sliding type.

(e) Pre-treated water tank and pump, for distilled rinse water.

(f) Vent system, exhaust through duct collar.

(g) Controls, automatic, with adjustable cycles. Include thermostatic control of hot water cycles.

(h) Intregal water heat booster to provide 180 degree water.

(i) Load racks, baskets and devices, to provide for two complete loads of each of the following products, when one load is being washed and the other load is being loaded or unloaded: Pipettes, flasks, miscellaneous small instruments, and miscellaneous small bowls. Load racks, baskets, and devices to be completely compatible for use in the Dryer, Laboratory Glassware (Item L-2100, Paragraph 7.1) without transfer of contents.

(j) Service Characteristics:

(1) Hot Water: 40 to 80 psi, 1" inch line.
Cold Water: 1/2 inch NPT.

(2) Pre-treated Water: 3/4 inch NPT (20 to 50 psig).

(3) De-ionized water, 3/4 inch NPT.

(4) Steam: 30 to 80 psi, 80 to 270 pounds per hour, 3/4 inch NPT.

(5) Electrical: 120 volts, 60 Hz, AC.

(6) Condensate, 1/2 inch NPT, return to source.

(7) Drain, 2 inch NPT.

7.15.3 Disposition: Install where indicated on drawings.

7.16 Item M-3960, Washer, Equipment, Steam; Gun Se

7.16.1 Steam Gun Set and Table for steam-water cl heat and moisture resistant equipment items, wall mount B88 and ASTM B135.

7.16.2 Unit includes:

(a) Gun, squeeze action, fingertip control

(b) Mixing nozzle with pinpoint, pressuriz

(c) Low heat conducting handgrips with wir steam hose, 10 feet long.

(d) Polyethylene detergent tank 2-1/2 g mounted, with 10 foot long detergent hose constructed hose.

(e) Strainer and regulator valve (dete nozzle).

(f) Steam-water selector; brass pipes a steel manifold, wall mounted.

(g) Accessories: Protective gloves, one brush and one 2 inch diameter stainless steel brush.

(h) Wall mounted, hinged fold down table, inches deep, mounted 36 inches above floor. Fabricat countertop and backsplash, folding brackets with hemme supports. Top braced and supported with stainless steel and hinged with continuous piano hinges. Include al mounting. See details included in this section.

7.16.3 Service Characteristics:

(a) Steam: 1/4 inch NPT condensate to drai

(b) Water: Cold, 1/4 inch NPT (30 to 40 ps

7.16.4 Disposition: Install where indicated on dra

5. INSTALLATION: Conform to installation provisions of section entitled "General Requirements for Medical Equipment".

6. FIELD TESTS AND INSPECTIONS:

6.1 Inspection: Examine each item for visual defects and conformance to specifications.

6.2 Tests: Perform tests on each audiometric booth in accordance with VA specification X-1438.

7. ITEMS:

7.1 Item M-0300, Audiometric Examination Booth:

7.1.1 Booth shall be prefabricated, approximately 78 inches high x 36 inches wide x 40 inches long inside, and 90 inches high x 44 inches wide x 48 inches long outside; conforming to VA specification X-1438, except as otherwise specified herein; ASTM A336, ASTM C423, ASTM E90; and MIL-J-641.

7.1.2 Include the following:

(a) Double wall construction.

(b) Ventilation system consisting of a self contained forced air unit providing 100 cfm of air into the testing room. Operation of system shall be below the threshold of hearing to three feet above floor inside the testing room. Mount system on unit as indicated on the drawings.

(c) View window, where indicated in unit's wall, shall be 24 inches long x 30 inches high. Locate window with sill 36 inches above floor of unit.

(d) Audiometric connector panel, shall be so constructed that unused jacks and receptacles will be covered to maintain the noise attenuating characteristics of the room. The panel shall include the following connectors:

(1) Six Each: three conductor jack with open circuit conforming to MIL-J-641, No. 5D, Item JJ-033 without frame interlocks or locating pin.

(2) One Each: three contact 2-1/16 x 1-1/2 inch cinch connector with a maximum 1.350 diameter plug hole, 7/16 inch deep, and standard termination, interior.

(3) One Each: three contact 2-1/16 x 1-1/2 inch cinch connector with a maximum 1.350 diameter plug hole, 7/16 inch deep, and standard termination, exterior, male.

(4) One Each: four contact, 2-1/16 x 1-1/2 inch cinch connector with a maximum 1.350 diameter plug hole, 7/16 inch deep, and standard termination, interior.

(5) One Each: four contact, 2-1/16 x 1-1/2 inch cinch connector with a maximum 1.350 diameter plug hole, 7/16 inch deep, and standard termination, exterior male.

(e) Light Fixture: One bulb swivel type, incandescent.

(f) Ramp, sized to accommodate handicapped and wheeled equipment.

(g) Noise reduction shall conform to the following table:

Octave Band Center Frequency (Hz)	Decibels (dB)
31.5	23
63.	28
125	36
250	44
500	52
1000	57
2000	65
4000	68
8000	71

7.1.3 Disposition: Install where indicated on drawings.

---END---

SECTION 11799. GOVERNMENT FURNISHED AND CONTRACTOR INSTALLED EXISTING MEDICAL EQUIPMENT

SECTION 11799. GOVERNMENT FURNISHED AND CONTRACTOR INSTALLED EXISTING MEDICAL EQUIPMENT

Delete this section in its entirety.

Medical Center, [illegible]

2. RELATED WORK SPECIFIED ELSEWHERE: Final utility connections and utility service to equipment under this section including waste shall be provided under sections entitled "Plumbing", "Steam Distribution", and "Interior Wiring Systems".

3. REMOVAL FROM EXISTING LOCATION:

3.1 Equipment Removal Schedule: Shall be coordinated with Contracting Officer.

3.1.1 Shut-down of existing building's operations shall be minimized.

3.1.2 No utilities may be turned off without the approval of the Contracting Officer.

3.2 Protecting of Building and Occupants: All necessary precautions to protect building and occupants from injury due to equipment removal shall be taken.

3.2.1 Cap and label pipe lines to and from removed equipment.

3.2.2 Cover and insulate exposed wires to and from removed equipment.

3.2.3 Adequately cover floor openings and flag projections.

3.3 Patching and Repairing of Existing Facilities: Shall be by the Contractor in accordance with General Requirements Sections.

4. PROTECTION:

4.1 Utilities: Close pipe openings with caps or plugs and protect electrical work.

4.2 Equipment: Tightly cover and protect equipment against dirt, water, and mechanical or chemical injury.

4.3 Repair: Damage to Government property due to fault or negligence of the Contractor shall be repaired or replaced at no additional expense to the Government.

5. INSTALLATION: Install each item in accordance with the installation provisions of section entitled "General Requirements for Medical Equipment".

6. FIELD TESTS AND INSPECTIONS:

6.1 Inspection: Examine each item for visual defects.

6.2 Tests: Test each item to insure that the equipment is operational.

7. ITEMS: The equipment listed in this section shall be removed from the designated existing location, protected, transported, and installed where indicated on the drawings.

7.1 Item S-4771, Sterilizer, Steam; Cabinet:

7.1.1 Sterilizer shall be direct steam heated, single door, freestanding cabinet which is located in existing Hospital. Suitable for processing laboratory supplies, culture media, contaminated waste and other heat and moisture stable materials at temperatures of 100 to 132 degrees C, streaming steam (non-pressure) at 100 degrees C, and heat-coagulable and heat sensitive materials between 78 and 104 degrees C. Cabinet size, approximately 30 inches wide by 40 inches deep by 75 inches high.

7.1.2 Connect the following after re-installation:

(a) Automatic controls, motorized, multi-port valve.

(b) Alarm and signal light.

(c) Steam and steam return piping.

(d) Water and drain piping.

(e) Electrical services.

(f) Condensate to waste.

(g) Main control panel; secondary control panel; indicator-recorder, controller and exposure timer.

(h) Chamber-trap bypass handle.

7.1.3 Service Characteristics:

(a) Electrical: 120 volts, 60 Hz.

(b) Steam: 3/8 NPT (50 to 80 psig).

(c) Steam Return: 3/8 NPT to waste.

202. Unit shall be fully mechanical requiring no manual lifting to operate and shall have a working range of 12 inches above dock and 12 inches below dock. Dock leveler designed shall allow ramp to tilt up to 4 inches left or right.

4.1 General Requirements: All parts of the equipment shall be of such design, size, materials, and strength as to readily carry and sustain the maximum allowable load imposed upon it, with a proper factor of safety, maximum mechanical efficiency, and a minimum wear on parts. Ramp shall not bind, jam, or suffer damage to its components while operating within the specified operating ranges. Each part shall be made to definite standards, tolerances, and clearances so that it shall be possible to replace or adjust any part without the necessity of machine work.

4.2 Ramp: Ramp shall be steel treadplate with a minimum yield of 55,000 psi, and reinforced with eight 6 inch formed channels.

4.3 Lip: Lip shall be 5/8 inch thick ASTM A36 steel treadplate, 16 inches long by width of dock leveler with chamfered leading edge, and have 12 inch lip extension beyond bumpers. Lip shall automatically extend and lock at the highest ramp position to clear all truck beds.

4.4 Frame: Frame shall be structural and formed steel weldment.

4.5 Counterbalance: Counterbalance shall be by an enclosed compression spring applied to rate compensating lifting arm at center of ramp. Counterbalance shall have a single adjustment at front of board.

4.6 Toe Guards: Toe guards shall be one piece steel providing protection throughout entire operating range.

4.7 Traffic Legs: Hinged legs shall provide full capacity support both at and below dock level. Auxiliary leg release shall allow lowering of unit below dock level without extending lip.

4.8 Emergency Safety System: Provide each dock lever with an emergency safety system to limit the downward movement of dock leveler to 3 inches from any position in the dock leveler working range.

4.9 Bumpers: Each dock leveler shall be provided with two 4 inch by 18 inch by 18 inch "L" shaped molded, fiber impregnated rubber dock bumpers.

4.10 Welding: Welding shall be semi-automatic, inert gas arc.

4.11 Finish: All components shall be Wheelabrator shot cleaned, flow coat painted and oven dried. Finish shall pass ASTM B117 salt spray test and 300 hour water immersion test.

5. LOADING DOCK BUMPERS: Loading dock bumpers shall be provided for horizontal and vertical installation on face of docks and shall be of size and

SECTION 11872. DOCK LEVELERS AND BUMPERS

1. APPLICABLE PUBLICATIONS: The following publications of the issues listed below, but referred to thereafter by basic designation only, form a part of this specification to the extent indicated by the references thereto:

1.1 American Society for Testing and Materials (ASTM), Publications:

A36-75	Structural Steel.
A307-76b	Carbon Steel Externally and Internally Threaded Standard Fasteners.
B117-73	Salt Spray (Fog) Testing.

1.2 National Bureau of Standards (Commercial Standard) Publication:

CS 202-56	Industrial Lifts and Hinged Loading Ramps.

2. QUALITY CONTROL: Approval, except those required for field installations, field applications, and field tests, shall be obtained before custom fabrication is started and before delivery of materials or equipment to the project site.

2.1 Tests and Test Reports: The testing requirements incorporated in referenced documents will be waived provided the manufacturer submits certificates that previously manufactured materials have been tested by recognized laboratories, that such materials meet testing requirements specified and that the tested materials are of the same type quality, manufacture and make as that furnished for this project. Copies of the test reports need not be submitted except as specifically requested by the Contracting Officer.

3. SUBMITTALS:

3.1 Shop Drawings: Shop drawings shall be submitted and approved prior to commencement of work. Shop drawings shall show the concrete pit details including edge angles, bumpers, method of mounting and anchoring the dock levelers, and detailed information covering all built-in items (such as anchors). Shop drawings shall show all construction changes or additional space requirements needed to install dock levelers.

3.2 Manuals and Instructions: Operating and maintenance manuals, including written instructions relative to care, adjustment and operation of dock levelers, and photographs or cuts of repair parts with part numbers listed shall be submitted.

4. DOCK LEVELERS: Dock levelers shall be of size indicated with a 20,000 pound live load capacity. Unit shall conform to Commercial Standard CS

(g) Nameplate of corrosion-resistant metal, permanently attached in conspicuous location on front of unit. Nameplate legend shall include: manufacturer's name, trade name of unit if any, model and serial number, rated capacities and types of waste for which designed.

(h) An ignition burner shall be provided in the primary combustion chamber for waste light-off. This burner shall be automatically activated by control system. Length of burn time shall be field adjustable.

(i) Controls shall be automatic type with electric ignition. Controls shall be installed in accord with National Electrical Code. Burner shall be integrally wired with its controls, protected against radiated heat, and painted with heat-resistant paint.

(j) Electrical service for controls shall be two-wire, 120 volts, 60 Hz, single phase, with safety devices energized from hot wire side of control circuit. Control panel shall include integrally mounted step-down transformer for 120 volt control circuit when burner motor is not wired for 120 volts.

(k) Furnish motors, motor starters and electric controls as specified, conforming to requirements as specified in Division entitled, "Electrical".

(l) Provide one complete set of any special tools required for proper operation and maintenance of incinerator, in suitable case with identification markings.

9.1.3 Disposition: Install where indicated on drawings and coordinate with other trades.

----END----

9. ITEMS:

9.1 Item L-2400, Incinerator:

9.1.1 Incinerator shall be a batch burn type, operated in accordance with the controlled air principle of combustion. A means shall be provided by which all combustion air (primary and secondary) can be properly regulated to insure complete smokeless combustion of the waste material. The unit shall be provided with one or more primary combustion chambers and one secondary combustion chamber (carburetor) properly designed to consume all combustible effluent generated in the primary combustion chamber. The unit shall fit the space allocated allowing ample room for loading and maintenance operations. The outer casing shall be of not less than 10 guage steel plate reinforced with structural steel members. The lining shall consist of not less than 4-1/2 inches castable refractory properly anchored to the steel casing. This material shall comply with ASTM C401. Insulation material shall comply with ASTM C612, Class 2. Conform to ANSI B15.1; NFPA No. 54 and 70; IIA Incinerator Standards.

9.1.2 Include the following:

(a) Exhaust stack, shall be supported from the incinerator or incinerator foundation and shall be refractory lined, metal jacketed, suitable for temperatures up to 2000 degrees F, UL approved. Stack base plate shall have gussets for support and attachment to the carburetor. Spark screen shall be provided. Barometric damper shall be provided if required to prevent overdraft. "Stack shall terminate a minimum of 10'-0" above the roof."

(b) Burner(s), shall be applicable for use with propane vapor, and shall be equipped with electronic safety controls and automatic electric ignition.

(c) A control panel containing controls for complete programming of the burning cycles shall be furnished. All wiring shall be properly numbered and identified to the schematic wiring diagrams. A "start" pushbutton shall be provided for initiating each burning cycle. All control wiring, including starters, shall be furnished and installed by the manufacturer as an integral part of this unit. Length of burn times shall be field adjustable. Controls shall provide for automatic continuation of burn cycle to completion in the event of power failure during a burn.

(d) The primary chamber shall be provided with loading door to facilitate complete loading of waste.

(e) Design of unit shall permit the loading and reduction of type IV wastes, only, when mixed waste is not being burned.

(f) Prime and finish coat of paint shall be applied per manuafacturer's standard paint specification and color.

7.5 After refractories have been cured and prior to operating test, incinerator shall be operated at rated capacity for period of one hour to build up refractory heat storage and temperature. After warm-up period is completed, remove residue and ashes from unit before 6 hour operating test is conducted.

7.6 Incinerator shall completely consume wastes as received, reducing them to ashes without emission of offensive odors, without charred material and without smoke in excess of regulated limits.

7.7 Operating log shall be maintained by testing personnel during test periods, including the following data:

7.7.1 Date and time.

7.7.2 Type, percentage and weight of waste charged.

7.7.3 Chamber temperatures.

7.7.4 Stack temperature.

7.7.5 Casing surface temperature, sides and top, total of five locations.

7.7.6 Remarks - such as adjustments to equipment, controls and the like, and unusual conditions, as improper combustion, malfunction of burner and the like.

7.7.7 Amount of residue removed from unit at end of operating test. Weight of residue of waste charged shall be not more than the following amounts:

Type 0 waste - 7%
Type IV waste - 7%

7.8 Malfunction or Damage: In event tests disclose any malfunctioning of equipment, or if any damage is caused to any part of unit and equipment during or after test, repairs, replacements and corrections shall be made to restore unit and equipment to original or better condition, and tests repeated as specified, until incinerator complies with specifications.

8. OPERATING AND MAINTENANCE MANUAL:

8.1 Three copies of manuals in hard back binders shall be provided.

8.2 Manuals shall cover operating procedures, maintenance points and schedules, parts lists, trouble-shooting.

8.3 Manuals shall be specifically edited for the model and components provided.

4.2 Associated Work: Other work associated with the incinerator, including gas piping, electrical power wiring and ventilation, is covered in other sections of these specifications.

4.3 Safety Standards:

4.3.1 Safety features shall include those required by the referenced publications.

4.3.1.1 Couplings, motor shafts, gears or other moving parts shall be fully guarded, in accordance with ANSI 15.1. Guards shall be cast iron or expanded metal. Guard parts shall be rigid and suitably secured and be readily removable without disassembling the guarded unit.

5. ENVIRONMENTAL REQUIREMENTS:

5.1 The incinerator must comply with the requirements of all applicable local, state and federal emission regulations. The incinerator is to operate with no visible emission.

5.2 After the test burn specified herein, manufacturer shall provide certificate of compliance with a State of North Carolina permit to operate, signed by official representative for testing.

6. MANUFACTURER'S SUPERVISION:

6.1 The Contractor shall provide the services of competent factory representatives to supervise the installation, test, start-up, and adjustment of incinerator and to instruct Government personnel in the proper operation and maintenance of the equipment. Such services shall be provided for a minimum of 2 working days.

7. FIELD TESTS:

7.1 After incinerator installation is completed and prior to acceptance, Contractor shall conduct continuous 6 hour operating test to demonstrate ability of incinerator to consume, as received, materials specified.

7.2 Tests shall be supervised by manufacturer's representative in presence of Contracting Officer or his authorized representative.

7.3 Contractor shall furnish all test equipment, accurately calibrated instruments and operating personnel to conduct tests. Fuel, when available, shall be furnished by the Government.

7.4 Government will supply waste material, meeting general requirements of waste specified, to be consumed as to type, percentage and the like, for tests.

(d) Water and Drain: 3/8 NPT cold water (20 to 50 psig) dynamic; drain 1-1/2 inch NPT.

7.1.4 Disposition: Install where indicated on drawings and connect to building utilities.

---END---

SECTION 11868. PATHOLOGICAL INCINERATOR

1. APPLICABLE PUBLICATIONS: The following publications of the issues listed below, but referred to thereafter by basic designation only, form a part of this specification to the extent indicated by the references thereto:

1.1 American National Standards Institute (ANSI) Publication:

B15.1-72 Safety Standard for Mechanical Power-Transmission Apparatus.

1.2 National Fire Protection Association (NFPA) Publications:

No. 54-74 National Fuel Gas Code.

No. 70-1978 National Electrical Code.

1.3 Incinerator Institute of America:

Incinerator Standards.

1.4 American Society for Testing and Materials (ASTM) Publications:

C401-70(1976) Classification of Castable Refractories.

C612-70 Mineral Fiber Block and Board Thermal Insulation.

2. QUALITY CONTROL: Approvals, except those required for field installations, field applications, and field tests shall be obtained before delivery of materials or equipment to the project.

3. SUBMITTALS: Forward submittals, in seven copies, separately and apart from submittals required by other sections and mark "Submitted under section entitled "Pathological Incinerator". Submittals shall be forwarded through the Contractor's Quality Control representative to the Contracting Officer for approval.

3.1 Submittals shall include layout or shop drawings, showing dimensional data, general arrangement, rough-in data for utilities, performance data and specifications of materials.

4. GENERAL REQUIREMENTS:

"4.1x The requirements include the provision and test of one incinerator system complete with stack and appurtenances as specified and indicated. Incinerator shall be suitable for type 0 wastes, type IV wastes or mixed type 0 and IV wastes. Type 0 and IV wastes are defined in Incincerator Institute of America manual entitled "Incinerator Standards". The incinerator shall have a minimum burning capacity of 375 pounds of type IV wastes per 6 hour burn period."

shape all as indicated. Loading dock bumpers are in addition to bumpers provided as a component part of dock levelers. Loading dock bumpers shall be fabricated from rubberized-fabric truck tires cut to uniform size pads and punched to receive 3/4 inch steel supporting rods. Each bumper shall be closed with two 3 inch by 2-1/2 inch by 1/4 inch structural steel angles under approximately 1500 pound pressure. Angles shall be welded to 3/4 inch rods at one end and closed with threaded rod and nut at the other end. Anchor leg of angle shall extend a minimum of 2-1/2 inches beyond rubber surface at each end. Anchor bolts shall conform to ASTM A36 with cut threads or ASTM A307, and nuts and washers shall conform to ASTM A307.

6. INSTALLATION:

6.1 Dock Levelers: Dock levelers shall be installed by, or under the supervision of the manufacturer or an individual or firm licensed by the manufacturer. Supervision shall include, at a minimum, inspection of the installation as the work progresses to insure that the equipment is installed properly. If the dock levelers furnished requires modification of the construction shown, such modifications shall be made without additional cost to the Government. The pit for the dock leveler shall not be poured until the shop drawings have been approved, coordinated with the pit construction, and all built-in parts are in place. Provide all necessary anchor bolts, shims, fastenings, recesses, cutouts, slots, holes, grouting, etc. to accommodate installation of the equipment. Installation and adjustment shall be in strict accordance with the manufacturer's installation manual, a copy of which shall be submitted with the shop drawings.

6.2 Loading Dock Bumpers: Install loading dock bumpers where indicated, in accordance with approved shop drawings and manufacturer's instructions.

---END---

SECTION 11881. DETENTION SCREENS

1. APPLICABLE PUBLICATIONS: The following publications of the issues listed below, but referred to thereafter by basic designation only, form a part of this specification to the extent indicated by the references thereto:

1.1 American Society for Testing and Materials (ASTM) Publications:

A36-75	Structural Steel.
A478-76	Chromium-Nickel Stainless and Heat-resisting Steel Weaving Wire.

2. QUALITY CONTROL: Approvals, except those required for field installation, field application and field tests, shall be obtained before delivery of materials to the project site.

3. SUBMITTALS:

3.1 Tests and Certificates: The testing requirements for materials incorporated in referenced document will be waived provided the Contractor submits certificates from the manufacturer stating that materials furnished for this project conform to all requirements of this specification and the referenced documents. Material certificates shall be submitted to and approved by the Contracting Officer. Copies of the test reports need not be submitted except as specifically requested by the Contracting Officer.

3.1.1 Sample Certificate: The certificate shall not contain statements that could be interpreted to imply that the product does not meet all requirements specified, such as "as good as"; "achieve the same end use and results as materials formulated in accordance with the referenced specification"; "equal or exceed the service and performance of the specified material". The certificate should simply state that the product conforms to all requirements specified.

SAMPLE CERTIFICATE

The manufacturer hereby certifies that all following products being furnished for this project conform to all requirements of the project specifications and the respective reference specifications:

MANUFACTURER AND PRODUCT	REFERENCE SPECIFICATION
John Doe Company Steel Shapes	ASTM A36

SIGNATURE AND TITLE

3.2 Shop Drawings: Shop drawings shall be submitted to and approved by the Contracting Officer before delivery of materials to the site. Drawings

shall show plans, elevations, details of construction, gages of metal, fittings, mountings, installation details, and anchoring.

3.3 Samples: The following samples of materials shall be submitted to and approved by the Contracting Officer before work is started:

(1) Wire Cloth: One unit 12-inches by 12-inches.

(2) Swing Frame: One unit at corner, 6-inches by 6-inches.

(3) Sub-Frame: One unit at corner, 6-inches by 6-inches.

3.4 Manufacturer's Installation Procedures: Current copies of material manufacturer's recommended standard installation procedure for material shall be submitted to and approved by the Contracting Officer before work is started.

4. DELIVERY AND STORAGE:

4.1 Delivery: Screens and accessories delivered to the site shall be inspected for damage, unloaded and stored in suitable and accessible spaces with a minimum of handling.

4.2 Storage: At the site, screens shall be stored carefully on platforms under cover. The storage spaces shall be in dry locations with adequate ventilation, free from dust, or water, and shall permit easy access for inspection and handling. The use of non-vented plastic or canvas shelters which create a humidity chamber shall be avoided. If the fiberboard wrapper on the screen becomes wet, the carton shall be removed immediately. To promote air circulation, a 1/4 inch space shall be provided between the screens.

5. MATERIALS:

5.1 Steel: ASTM A36.

5.2 Wire Cloth: Stainless steel wire cloth shall be 12 by 12 mesh .028 high tensile type 302/304 conforming to ASTM A478. The wire shall have double crimped crossings with a minimum crimp ratio of 45 percent. After weaving the tensile strength shall test not less than 800 pounds per linear inch on either the horizontal or vertical strands.

5.3 Screen Hardware: Each screen shall have a concealed bitt key lock actuating case hardened steel bolts. The bolts operate simultaneously from one key station with a special bitt key. Emergency releasing is available by either keying both sides or a lift handle on the exterior of the screen. Each screen shall be provided with rubber bumpers and 2 or more concealed plated 11 gage steel hinges with hard brass loose pins. Each screen shall have all necessary installation hardware, including fastening screws, adjusting screws and 16 gage steel scribes. The scribes shall be supplied at the head and jambs if required.

6. FABRICATION: All detention screens shall be of the medium security type, except where maximum security type is indicated.

6.1 Swing Frame: The swing frame shall be of channel design and made of not less than 11 gage steel. The corners of the swing frame shall be electrically welded and ground smooth. When the swing frame is in a closed position, both the inside and the outside faces shall be free from all screws, rivets or bolts; thus providing maximum security from either side.

6.2 Integral Sub-frame: The sub-frame and outer cover plate shall be an integral channel design and made of not less than 11 gage steel. The corners of the integral sub-frame shall be electrically welded and ground smooth.

6.3 Wire Cloth Attachment:

6.3.1 Medium Security Type: The wire cloth shall be wrapped around the edge of the swing frame and held securely in place by means of wire cloth retainer clips. The wire cloth retainer clips shall be attached by means of screws and shall be spaced on approximately 8 inch centers, passing through the wire cloth twice.

6.3.2 Maximum Security Type: Each wire cloth suspension system shall consist of 2 leaf springs, 2 wire cloth retainer clevises and one wire cloth clevis. The clevis supports the 8 gage leaf springs at their mid-point. The springs in turn support the two wire cloth clevises on approximate 8 inch centers. The wire cloth shall be wrapped around the wire cloth shim and held within the wire cloth retainer clevis by 2 drive screws on 3 inch centers.

6.4 Finish: Both frame units and scribes shall be thoroughly cleaned inside and out, bonderized, finished with one coat of grey primer, and one coat of baked-on grey enamel. See color schedule for final paint color.

7. INSTALLATION: Manufacturer or one of their approved qualified erectors shall install screens. Screens shall be installed in accordance with approved shop drawings and manufacturer's directions. After installation, all exposed surfaces shall be thoroughly cleaned, and all damaged work shall be restored to its original condition, or replaced with new work at no expense to the Government.

---END---

SECTION 12510. ELECTRIC DRAPERY TRACKS

1. APPLICABLE PUBLICATIONS: The following publications of the issues listed below, but referred to thereafter by basic designation only, form a part of this specification to the extent indicated by the references thereto:

1.1 Federal Specification:

QQ-A-200/9C & Am 1	Aluminum Alloy Bar, Rod, Shapes, Tube, and Wire, Extruded 6063.

1.2 American Society for Testing and Materials (ASTM) Publication:

A480-75	Flat-rolled Stainless and Heat-resisting Steel Plate, Sheet, and Strip.

1.3 National Association of Architectural Metal Manufacturers (NAAMM) Publication:

Metal Finishes Manual (Finish Designation), August 1969.

2. QUALITY CONTROL: Approvals, except those required for field installation, field application and field tests, shall be obtained before delivery of materials to the project site.

3. SUBMITTALS:

3.1 Tests and Certificates: The testing requirements for materials incorporated in referenced documents will be waived provided the Contractor submits certificates from the manufacturer stating that materials furnished for this project conform to all requirements of this specification and the referenced documents. Copies of the test reports need not be submitted except as specifically requested by the Contracting Officer.

3.1.1 Sample Certificate: The certificate shall not contain statements that could be interpreted to imply that the product does not meet all requirements specified, such as "as good as"; "achieve the same end use and results as materials formulated in accordance with the referenced specification"; "equal or exceed the service and performance of the specified material". The certificate should simply state that the product conforms to all requirements specified.

SAMPLE CERTIFICATE

The manufacturer hereby certifies that all following products being furnished for this project conform to all requirements of the project specifications and the respective reference specifications:

MANUFACTURER AND PRODUCT	REFERENCE SPECIFICATION
John Doe Company Extruded Aluminum	QQ-A-200/9

SIGNATURE AND TITLE

3.2 Shop Drawings: Shop drawings shall be submitted and approved before work is started. Drawings shall show elevations, details, anchorage, metal thicknesses, and other details of construction.

3.3 Samples: Submit two samples of track, end caps, brackets, master carrier, carrier, and anchors for approval before work is started. Samples shall be submitted with finish as specified.

3.4 Manufacturer's Installation Procedures: Submit current copies of manufacturer's recommended standard installation procedures for electric drapery tracks before work is started.

4. DELIVERY AND STORAGE: Materials shall be delivered to the job in the manufacturer's original unopened containers, with the brands and names clearly marked thereon. All materials shall be carefully handled and shall be stored in their original containers until time of installation.

5. ELECTRIC DRAPERY TRACKS: Drapery tracks shall be electric operated, two-way draw (center draw) as indicated.

5.1 Track: Track shall be .080 inches thick extruded from 6063-T5 aluminum alloy conforming to QQ-A-200/9. Track shall be 2-5/8 inches wide by 2-1/4 inches high by length as indicated. Track shall be of type to accept a linear motor.

5.2 End Caps: End caps shall be 1/8 inch thick, fabricated from polycarbonate, and of size and shape to fit ends of track.

5.3 Master Carrier: Each track shall be provided with 2 master carriers.

5.3.1 Frames: Master carrier frames shall be fabricated from polycarbonate.

5.3.2 Arms: Master carrier arms shall be fabricated from 1010 hot rolled steel sheet, .093 inches thick.

5.3.3 Bearings: Master carrier bearings shall have Teflon coated polycarbonate wheels.

5.4 Snap Carriers: Each track shall be provided with snap carriers, spaced 1-7/8 inch on center. Carriers shall be fabricated from copolymer plastic with Teflon coated polycarbonate wheels.

5.5 Brackets: Brackets shall be .187 inch thick extruded from 6063-T5 aluminum alloy conforming to QQ-A-200/9.

5.6 Anchors: Anchors shall be of type and design as recommended by track manufacturer for this type application. Spacing of anchors shall be as recommended by track manufacturer.

5.7 Motor: Provide one motor for each drapery panel. Motor shall be a linear type using magnetic thrust for propulsion. Each linear motor shall produce a thrust of 6 pounds. Motor shall be designed to operate inside track and shall be provided with a built-in thermal breaker which protects against any possible overload. Motor shall consist of an actuator unit and an electrified rail within the track. Motor encasement shall be fabricated from polycarbonate. Each motor shall be rated 500 watts at 120 volts, 60 Hz.

5.8 Switch: Each drapery track shall be provided with one single pole, double throw, momentary contact, 120 volt tumbler type keyed switch. Provide 4 keys per switch. Switch shall be for flush mounting with a stainless steel cover plate. Key units in accordance with Contracting Officer's requirements.

5.9 Electrical Components, Construction, and Workmanship: Conform to the requirements of section entitled "Interior Wiring Systems".

6. FINISH: All exposed aluminum surfaces shall have a AA-M10-C22-A42 color anodized finish in accordance with the requirements of NAMM's "Metal Finishes Manual". Finish color shall be black. Finish shall match in appearance or fall within the two extremes of color range of the approved samples. Cover plate shall have a No. 4 finish conforming to ASTM A480.

7. INSTALLATION: Installation shall be performed by mechanics skilled in installation of electric drapery tracks. Tracks shall not be installed until painting and finishing operations are complete. Install, connect, and place in successful operation electric drapery tracks, control devices, conduit, fittings, wiring, connecting hardware, and accessories in accordance with UL requirements, manufacturer's instruction details, and approved shop drawings. Electrical service of the indicated characteristics will be provided at each electric drapery track. Electrical workmanship shall be in accordance with section entitled "Interior Wiring Systems". After installation and connection, adjust operators, hardware, and controls to insure that electric drapery tracks function properly.

8. TESTS: After installation of drapes, the Contractor shall demonstrate to the satisfaction of the Contracting Officer that each electric drapery track functions properly. Contract shall not be complete until such tests meet the approval of the Contracting Officer.

---END---

SECTION 13451. REFRIGERATED ROOM

1. APPLICABLE PUBLICATIONS: The following publications of the issues listed below, but referred to thereafter by basic designation only, form a part of this specification to the extent indicated by the references thereto.

1.1 Military Specifications:

MIL-I-24172 & Am 1	Insulation, Plastic, Cellular Polyurethane, Rigid, Preformed and Foam in Place.

1.2 American Society for Testing and Materials (ASTM):

E84-76	Surface Burning Characteristics of Building Materials.

1.3 National Sanitation Foundation (NSF):

7-71	Food Service Refrigerators and Storage Freezers.

2. QUALITY CONTROL: Approvals, except those required for field installation, field application and field tests, shall be obtained before delivery of materials to the project site.

2.1 Standards Compliance: Where equipment or materials are specified to conform to requirements of the publications of organizations such as UL, NSF, ASTM, the Contractor shall submit proof of such conformance. The label or listing of the specified agency will be acceptable evidence. In lieu of such certification, label or listing, a written certificate from an approved nationally recognized testing agency adequately equipped and competent to perform such services may be submitted, stating that the items have been tested and that the units conform to requirements specified herein, including methods of testing of the specified agencies.

2.2 Cataloged Products: Materials and equipment shall be cataloged products of manufacturers regularly engaged in production of such materials or equipment and shall be manufacturer's latest design that complies with the specification requirements. Where two or more units of the same class of equipment are required, these units shall be products of a single manufacturer; however, the component parts of the system need not be the products of the same manufacturer. Each item of equipment shall have manufacturer's name, address, and model and serial number on a nameplate securely affixed in a conspicuous place; nameplate of a distributing agent only will not be acceptable.

2.3 Verification of Dimensions: The Contractor shall be responsible for the coordination and proper relation of his work to the building structure and to the work of all trades. The Contractor shall visit the premises and thoroughly familiarize himself with all dimensions in the field, and to advise the Contracting Officer of any discrepancy before performing any work.

3. SUBMITTALS:

3.1 Tests and Certificates: The testing requirements for materials incorporated in referenced documents will be waived provided the Contractor submits certificates from the manufacturer stating that materials furnished for this project conform to all requirements of this specification and the referenced documents. Material certificates shall be submitted to and approved by the Contracting Officer. Copies of the test reports need not be submitted except as specifically requested by the Contracting Officer.

3.1.1 Sample Certificate: The certificate shall not contain statements that could be interpreted to imply that the product does not meet all requirements specified, such as "as good as"; "achieve the same end use and results as materials formulated in accordance with the referenced specification"; "equal or exceed the service and performance of the specified material". The certificate should simply state that the product conforms to all requirements specified.

SAMPLE CERTIFICATE

MANUFACTURER AND PRODUCT	REFERENCE SPECIFICATION
John Doe Company Insulation	ASTM E84

SIGNATURE AND TITLE

3.2 Samples: The following samples shall be submitted to and approved by the Contracting Officer before work is started:

(a) Prefabricated Panels: One unit 12 inches by 12 inches.

(b) Panel Gaskets: One unit 12 inches long.

(c) Door Gasket: One unit 12 inches long.

(d) Section Fasteners: Two of each type.

3.3 Shop Drawings: Shop drawings shall be submitted to and approved by the Contracting Officer before work is started. Drawings shall show types, sizes, locations, metal gages, hardware provisions, installation details, and other details of construction.

3.4 Manufacturer's Installation Procedures: Manufacturer's installation procedures shall be submitted to and approved by the Contracting Officer before work is started. Installation procedures shall accompany shop drawings.

3.5 Manufacturer's Maintenance Instructions: Submit to the Contracting Officer, upon completion and prior to acceptance of work, current copies of

refrigerated room manufacturer's printed recommendations on maintenance methods for refrigerated room.

3.6 Catalog Data: Complete descriptive literature shall be submitted to and approved by the Contracting Officer. Data which describes more than one type, size, model, or item shall be clearly marked to indicate which type, size, model, or item Contractor intends to provide. Data shall be sufficient to show conformance to specified requirements.

4. DELIVERY AND STORAGE: Materials shall be delivered to the job site wrapped in a protective covering, with the brands and names clearly marked thereon. Materials shall be stored in dry locations with adequate ventilation, free from dust, or water and in such a manner to permit easy access for inspection and handling. Materials shall be handled carefully to prevent damage to the faces, edges, and ends. Damaged items that cannot be restored to like-new condition shall be replaced at no additional cost to the Government.

5. GENERAL DESCRIPTION: The work includes providing one Refrigeration Storage Room of the prefabricated panel type located in Level 1, Area F, Room Number E161. Unit shall be complete and ready for operation. Unit shall be metal clad, interlocking, factory prefabricated insulated sectional type. The construction shall utilize an integral locking device to allow unit to be erected without special tools. The entire unit and all its component parts shall be approved by Underwriters' Laboratories, Inc. Construction shall be in accordance with the NSF 7. All interior wall, ceiling and floor junctions shall have smooth 0.5 inch radius corners. Internal wiring for lighting, receptacles, and door heaters shall be part of pre-fabricated unit furnished and installed by Refrigerator Storage Room manufacturer. Wire for internal circuits and evaporator unit shall be terminated in junction boxes and vaporproof seal shall be provided between wires and conduits at wall and ceiling penetrations to prevent the entrance of water vapor into the conduits. Power service connections for internal circuits and evaporator unit will be provided under section entitled "Interior Wiring Systems".

6. MATERIALS:

6.1 Panel Sections: Panel sections shall be capable of being used as a load bearing member. Panel sections shall be 11-1/2 inches, 23 inches, and 46 inches wide, except where specified otherwise. Sections shall consist of interior and exterior metal pans precisely formed with metal dies and checked with gauges for uniformity. Insulation shall be rigid urethane and shall be "foamed-in-place" to bind tenaciously to interior and exterior metal pans to form a rigid strong wall without wood or metal structural members. Section edges shall have tongues and grooves "foamed-in-place" to assure air-tight vapor-proof joints. Provide vinyl proof gasket at all joints. Construction of the floor section shall be similar to all other panel sections, except floor section shall be capable of withstanding uniformly distributed floor loads up to and including 600 pounds per square foot. All panel facings shall

be .042 inch thick stucco embossed aluminum, except floor panel facings shall be 14 gage bright galvanized steel.

6.2 Insulation: Insulation shall be 4-inches thick rigid urethane foam (poured-in-place, not frothed) conforming to MIL-I-24172. Insulation shall conform to ASTM E84 and shall have a flame spread rating of 25 or less with a certifying UL label on every panel. The expanding agent shall be only Freon 11 with an inherent pressure of 38 psi when foam is heated to 150 degrees F. Thermal conductivity factor shall not exceed 0.118 BTU per hour. Overall coefficient of heat transfer shall not exceed .029. The insulation must remain stable at a temperature range of -90 degrees F. to +250 degrees F. Insulation shall carry Factory Mutual approval.

6.3 Section Fasteners: All panel sections shall be joined together with joining devices. Distances between locks shall not exceed 42 inches. Each locking device consists of a cam-action, hooked locking arm placed in one section, and a steel rod precisely positioned in the adjoining section so that by rotating the locking arm, the hook engages over the rod with cam action draws the sections tightly together. Both the locking arm and steel rod shall be housed in steel pockets set into the urethane insulation. These steel pockets shall be rigidly connected from one joining edge to the other joining edge of the same section by using 2 inch wide steel straps set into the insulation, forming perimeters of steel for extra strength. Locks shall be actuated from inside the room, enabling sections to be erected tight against a wall. An aligning device shall be provided in at least one joining device per vertical section. Stainless steel press-fit caps shall be provided to close wrench holes. The required locking wrench shall be supplied as part of the unit.

6.4 Hinged Door Section: An entrance opening of not less than 48 inches wide by 84 inches high shall be provided in a 69 inch wide section. The door shall be an infitting, flush-mounted type. Insulation shall be as specified in paragraph entitled "Insulation". Door facings for Refrigerator Storage shall be .042 inch thick stucco embossed aluminum.

6.4.1 Door Gaskets: A thermoplastic gasket with a magnetic steel core shall be mounted on both sides and top edges of the door. Bottom edge of door shall contain an adjustable rubber wiper gasket. When door is closed, magnetic force of the gasket shall form a positive air-tight seal. Gaskets shall be resistant to oil, fats, water and sunlight and be of the replaceable type.

6.4.2 Anti-Sweat Heaters: Door shall have two sets of heaters to prevent condensation and frost formation. One set of heaters shall be concealed behind the metal edge of the door jamb on all four sides and be thermostatically controlled. The second set of heaters shall be concealed beneath the exterior edges of the door and around the entire door perimeter. Provide metal threshold over anti-sweat heaters in floor of Refrigerated Storage Room.

6.4.3 Door Hardware:

6.4.3.1 Latch and Strike Assembly: The latch and strike assembly shall be made of cast aluminum with chromium finish. The latch shall be made to accommodate a padlock but shall include an inside safety release mechanism to prevent anyone from being locked inside.

6.4.3.2 Hinges: The hinges shall be made of cast aluminum and match the latch in general finish and design. Blades shall be no less than 9 inches and hinges shall be uplift type with nylon cam or 1/2 inch diameter stainless steel pins.

6.4.3.3 Door Closer: Provide manufacturer's standard door closer on Refrigerator Storage Door.

6.5 Observation Window: A 14-1/2 inch by 23 inch observation window shall be provided in Refrigerator Storage Door only, for vision into the area. Glass unit shall consist of at least three panels of glass, with sealed air spaces between with appropriate moulding.

6.6 Diamond Plate: Provide 3/16 inch thick aluminum diamond plate on interior floor of Refrigerator Storage.

6.7 Lighting: The door section shall be provided with an incandescent vapor-proof lamp on the interior. An operating toggle switch and pilot light shall be mounted on the exterior. An inlet box shall be provided for 115 volt, 60 cycle, single phase service.

6.8 Sleeves: Provide field-located factory-installed sleeved openings through insulated panels for refrigerant, water, drain, gas, electrical service lines and for thermometer and control elements. Sleeves shall be of a size to allow at least 1/2 inch clearance around insulation of pipes and conduits. Sleeves shall be plastic pipe fitted with plastic flanges inside and out. Sleeves and flanges shall be cemented at wall surfaces to provide strength and vapor seal. After pipes or devices are installed in sleeves annular, spaces shall be closed with glass fiber or foamed-in place urethane insulation and a mastic vapor seal applied to each end of sleeve.

6.9 Closure Strips: Area at sides of exposed front ends of refrigerator shall be vertical single closures rigidly secured to adjacent construction; designed to over-lap refrigerator ends and adjoining walls not less than 2 inches; and held against refrigerator by concealed means which shall not penetrate vapor-sealing of refrigerator nor damage adjoining walls.

6.10 Refrigeration System: Refrigeration system for Refrigerated Storage Room is specified under section entitled: "Refrigeration Equipment for Refrigerator Storage Room".

7. INSTALLATION: Install Refrigerated Storage Room in accordance with manufacturer's recommendations and approved shop drawings. Provide all electrical wiring and service connections as specified under other sections.

---END---

SECTION 13712. RADIO FREQUENCY SHIELDING

1. APPLICABLE PULBICATIONS: The following publications of the issues listed below, but referred to thereafter by basic designation only, form a part of this specification to the extent indicated by the references thereto:

1.1 Military Standards:

MIL-STD-285 Attenuation Measurement for Enclosures Electro-magnetic Shielding for Electronic Test Purposes, Method of.

1.2 American Society for Testing and Materials (ASTM) Publications:

E84-77 Surface Burning Characteristics of Building Materials, Test for.

E90-75 Airborne-Sound Transmission Loss of Building Partitions, Laboratory Measurement of.

E-152-76 Fire Tests of Door Assemblies.

1.3 National Fire Protection Association (NFPA) Publications:

80-75 Fire Doors and Windows.

2. QUALITY CONTROL: Approvals, except those required for field installations, field applications and field tests, shall be obtained before custom fabrication is started and before delivery of materials or equipment to the project site.

2.1 Testing: The Contracting Officer will witness all field tests. Contractor shall provide Contracting Officer ample notice of dates and times scheduled for tests. The Contractor shall provide all labor, equipment, qualified testors, and incidentals required for the tests. Deficiencies shall be corrected and enclosure shall be retested at no additional expense to the Government. The enclosure shall be field tested for isolation from ground during consturction and for radio frequency shielding upon completion as follows:

2.1.1 During construction of the radio frequency shielded enclosure, a relay operating ohmmeter shall be connected at all times to assure that the shielded enclosure is isolated from building ground by a minimum of 1,000 ohms.

2.1.2 The shielded enclosure shall be tested in compliance with MIL-STD-285, as modified for hospital installations by a test plan submitted by the manufacturer and approved by the Contracting Officer to demonstrate the attenuation as specified in paragraph entitled "Functional Performance". Testing shall be performed by the Contractor and shall be witnessed by the Contracting officer. Two tests shall be required as described below:

(a) Qualification Test: Qualification test shall be performed after the shielded enclosure is installed and before any other finishes or building construction is erected within the shielded enclosure.

(b) Acceptance Test: Acceptance test shall be performed after completion of the room, just prior to occupancy by the Government.

2.2 Guarantee: The radio frequency shielded enclosure shall be guaranteed against defective materials and workmanship and shall retain the specified shielding characteristics for a period of five years from the date of the Acceptance Test.

2.3 Qualifications: Approval by the Contracting Officer is required of products or services of proposed manufacturer, suppliers and installers, and will be based upon submission by the contractor of certification that:

(a) The manufacturer is regularly and presently manufacturing electromagnetic shielding as one of his principle products.

(b) The manufacturer shall have all necessary facilities to produce in his own factory, shielded laboratory assemblies meeting the requirements specified for work in this specification.

(c) Installer shall have technical qualifications, experience, trained personnel and facilities to install specified items. Approval will not be given, however, where the experience record is one of unsatisfactory performance.

(d) Manufacturer's product similar to those submitted have been in satisfactory and efficient operation for the lives of the buildings where shielding installations have been installed but not less than three years without degradation of performance. Contractor shall submit list of such installations.

(e) Manufacturer shall have access to necessary test equipment to be used during erection of shielded facility and for the performance of all specified tests after erection is completed.

2.3.1 Contracting Officer retains the right to approve an experience record less than that specified when the best interest of the Government would be served by such action and objectives of specification fulfilled.

2.3.2 Testing Qualification: All required test consisting of factory test, testing during erection and testing upon completion shall be performed by the manufacturer of the shielded facilities at no additional expense to the Government, or by any independent testing laboratory paid by the Contractor and approved by the Contracting Officer. Manufacturer's test department shall submit a listing of their test facilities, test instrumentation and qualification of its test personnel, to Contracting Officer for approval. The

test department shall produce evidence that they have in house test facilities which are in use at least five years for radio frequency testing of electromagnetic shielding design. Also, evidence should be submitted that it has a regular member of its technical staff, a registered professional engineer, with at least ten years experience in design, test and development of radio frequency shielded facilities.

3. SUBMITTALS:

3.1 Shop Drawings: Shop drawings shall be submitted to and approved by the Contracting Officer before work is started. Drawings shall show typical plan, elevation of the enclosure, typical construction, method of assembly, sections, location of miscellaneous penetrations and any other condition which will affect the shielded enclosure or trades which will perform work adjacent to or within the enclosure. Complete design drawings are required detailing not only the shielded enclosure but every other trade in conjunction with the enclosure, including wiring and ventilating.

3.2 Manufacturer's Installation Procedures: Manufacturer's current recommended installation procedures shall be submitted to and approved by the Contracting Officer before work is started. Installation procedures shall accompany shop drawings.

3.3 Operation and Maintenance Instructions and Parts List: Operation and maintenance instructions and parts list shall be submitted to and approved by the Contracting Officer. The instructions shall include complete procedure necessary to operate and maintain the enclosure including maintenance procedure, trouble shooting, assembly and disassembly of the room. Parts list shall include spare parts recommended by manufacturer to insure efficient operation of the enclosure.

3.4 Tests and Certificates: The testing requirements for materials incorporated in referenced documents will be waived provided the Contractor submits certificates from the manufacturer stating that materials furnished for this project conform to all requirements of this specification and the referenced documents. Material certificates shall be submitted to and approved by the Contracting Officer. Copies of the test reports need not be submitted except as specifically requested by the Contracting Officer.

3.4.1 Sample Certificate: The certificate shall not contain statements that could be interpreted to imply that the product does not meet all requirements specified, such as "as good as"; "achieve the same end use and results as materials formulated in accordance with the referenced specification"; "equal or exceed the service and performance of the specified material". The certificate should simply state that the product conforms to all requirements specified.

SAMPLE CERTIFICATE

The manufacturer hereby certifies that all following products being furnished for this project conform to all requirements of the project specifications and the respective reference specifications:

MANUFACTURER AND PRODUCT	REFERENCE SPECIFICATION
John Doe Company Panels	ASTM E90

SIGNATURE AND TITLE

4. PRODUCT DELIVERY AND STORAGE:

4.1 Delivery: Deliver materials to the Project site in original, unopened packages, containers, or bundles bearing the manufacturer's name and brand.

4.2 Storage: Keep materials dry; protect from weather; and store under cover, above the ground and away from sweating walls or other damp surfaces.

5. FUNCTIONAL PERFORMANCE:

5.1 The function of radio frequency shielding construction is to provide an interference free environment with a single ground point an/or to retain radio frequency signals inside of the shielded environment. In order to meet the functional performance criteria, all certification and applicable construction details shall be provided by the manufacturer of the enclosure. The interference free environment shall meet the following functional requirements:

(a) Attenuation to Magnetic Field: 60 db at 14 KHz increasing to 100 db at 200 KHz frequency.

(b) Attenuation to Electric Field: 110 db between 200 KHz and 50 MHz.

(c) Attenuation to Plane Waves: 100 db between 50 MHz and 10 GHz.

(d) The environment must be constructed ungrounded with a minimum resistance to ground of 1,000 ohms. After construction the environment shall be grounded at a single point, independent of all other ground reference levels.

(e) Panels shall have sound transmission class (STC) 30, when tested in accordance with ASTM E90 (not accounting for sound transmission loss of surrounding building construction).

(f) Flame resistance of shielded construction shall have a flame spread classification of 0, fuel contribution of 15, smoke density of 30, and

corresponding NFPA interior finish classification shall be Class A, UBC Class I when tested in accordance with ASTM E84.

(g) The door assemblies shall conform to NFPA 80 when tested per method defined in ASTM E152.

6. RADIO FREQUENCY SHIELDING ENCLOSURE: Radio frequency shielding enclosure includes a complete radio frequency shielding environment installed within the building of sizes detailed, with all accessories and facilities required; fully tested to meet the performance requirements specified; necessary supports and fasteners for a complete installation; all necessary shielded fittings for all penetrations; all other fittings, expansion anchors, hangers, isolators and supports as may be required for complete installation including those required for support of ceiling hung equipment and equipment supports; provisions to receive conventional building materials indicated both inside and outside of shielded environment as required or indicated; and suspended supporting system as indicated and dielectrically insulated from adjacent construction. The six sided enclosure shall be a modular arrangement of structural panels including framing system.

6.1 Radio Frequency Shielding Panels: Walls, floor, and ceiling panels shall be rigid structural laminated panels, faced with heat treated, annealed steel, treated to resist corrosion without degrading electrical continuity or radio frequency attenuation. Panel thickness shall complement the radio frequency framing system with a tolerance of plus or minus .015 inches. Factory fabricate corner sections as indicated. Floor panels shall have 1/8-inch thick masonite filler factory bonded on both sides of panel, and wall panels shall have 1/4 inch thick masonite filler factory bonded on room finish side.

6.2 Panel Interlocking System: Panel interlocking system shall consist of 1/8-inch thick half-hard H.R. steel, zinc-coated to resist corrosion without degrading the electrical continuity of the joint. Framing element shall consist of continuous shapes which provide a clamping action of panel edges with uniform and constant pressure contact against shielding elements for distance of at least 5/8 inches. Contacting surface to have a No. 63 finish and rolled section to have a tolerance of plus or minus .005 inches. Line contact will not be acceptable. Trihedral corners shall be framed with brass machined casting corner cap assemblies consisting of inner and outer parts. Fasteners shall be cadmium-plated, spaced 4-inches on center. All fasteners shall be heat treated and hardened with minimum tensile strength of 135,000 psf. Provide countersunk screws at floor and wall panel joints. The walls shall be self-supporting. The deflection of the walls under static load of 75 pounds applied normal to the wall surface shall cause a deflection not to exceed 1/250 of unsupported span. Radio frequency ceiling shall be supported from parent room overhead construction by means of dielectrically isolated adjustable type hangers. Deflection of the panels, including finishes, lights, diffusers, etc. shall not exceed 1/270 of the span.

6.3 Door Unit: Door unit mark No. W157 shall be factory assembled, consisting of door leaf, door frame, threshold, hardware and electrical contact strips. The door and frame perimeter shall be banded with extruded architectural bronze channels. The extruded channel of the frame shall have a recess to receive two rows of electrical contact strips in such a way that they are snapped in place without solder or fasteners. The contact strips must be unexposed when the door is open and must be easily replaceable without tools. Door perimeter shall utilize door sealing mechanism. Door shall be faced with hardwood veneer to match other doors in Hospital.

6.4 Door Hardware: Door hardware for door mark No. W157 shall consist of three radial and thrust bearing hinges of special design, with provisions to adjust the door in hung position, without removing the hinges, in increments of 0.005 inches in vertical or horizontal direction. The locking device shall consist of cam actuated type latch which is completely recessed within the door leaf, shall be operable from both sides of the door, and shall have permanently lubricated bearings at all points of pivot or rotation. Contact with the strike shall be by cam follower roller bearing. With the door leaf at rest with the finger stock in light contact with the frame, and without any force being exerted on it, the mechanism shall on rotation of the lever handle, draw the door into its final closing radio frequency tight position. Force on the handle required to finally seat the door shall not exceed 10 foot pounds. Reverse rotation of the handle shall force the door outward until the finger stock is free of the frames, with no more force than specified for the closing operation. In addition, door mark No. W157 shall be provided with a mortise lock operated by thumb turn on room side and key on outside. Cylinder shall be under section entitled "Finish Hardware". All hardware shall have finish to match finish of adjacent hardware.

6.5 Ceiling Supports (Inside Shielded Enclosure): See details on drawings. Ferrous metal items shall be either galvanized or coated with manufacturer's standard baked-on prime coat of paint.

6.6 Ground Provision: A single point ground shall be provided by means of 1/2 inch-13 brass stud located on the power line filter panel and as near as possible to the power line filters.

6.7 Related Materials: Acoustical ceiling tile and suspension system, metal stud partition (including gypsum wall board and insulation), gypsum wallboard laminated to masonite filler, window unit, door and frame unit (Mark No. W157A), resilient flooring and base is provided under other sections.

6.8 Waveguide-Type Air Vents: Specified and provided under section entitled "Air Supply Systems".

6.9 Line Filters:

6.9.1 Power Line Filters: Incoming electrical power lines, including neutrals shall be provided with radio frequency filters as indicated on Drawings. The filters shall have current and voltage ratings as indicated.

6.9.2 Telephone and Signal Line Filters: Incoming telephone and signal lines shall be provided with radio frequency filters as indicated on Drawings.

6.10 Service Panel: Power and telephone/signal lines shall enter the enclosure through a single entrance plate, confining penetration to as small an area as practical.

7. VERIFICATION OF CONDITIONS: Contractor shall verify at site all conditions affecting work of this section. Report to the Contracting Officer discrepancies, if any, between drawings and field conditions prior to commencing work. Commencing work indicates acceptance of conditions and surfaces underlying and adjacent to work of this section.

8. INSTALLATION: Coordinate work under this section with other building trades, including mechanical and electrical trades and equipment supplies. Installation shall be performed by manufacturer of shielded enclosure or under his direct field supervision. Commence installation after all surfaces are ready to receive the shielded enclosure. Polyethylene film of 6 mil thickness shall be placed over the structural floor of the parent room before any other work is placed thereon. Over this film additional filler material shall be provided to provide uniform ungrounded support for the panel. All panels shall be laid in a straight line with true level and even surfaces, and the joints shall be in alignment. Exposed surfaces shall be thoroughly cleaned of all dirt, finger marks and foreign matter resulting from handling or installation, and all areas shall be left free of defects.

---END---

SECTION 13750. RADIATION PROTECTION

1. APPLICABLE PUBLICATIONS: The following publications of the issues listed below, but referred to thereafter by basic designation only, form a part of this specification to the extent indicated by the references thereto.

1.1 Federal Specifications:

DD-G-451D	Glass, Float or Plate, Sheet, Figured (Flat, for Glazing, Mirrors and Other Uses).
QQ-L-201F & Am 2	Lead Sheet.
SS-L-30D	Lath, and Board Products, Gypsum.

1.2 Gypsum Association (GA):

GA-216-77	Recommended Specifications for the Application and Finishing of Gypsum Board.

1.3 National Bureau of Standards (NBS) Handbook:

76	Medical X-Ray Protection Up to Three Million Volts (February 1961 and Insert May 1964).

2. QUALITY CONTROL: Approvals, except those required for field installation, field application and field tests, shall be obtained before delivery of materials to the project site.

2.1 Testing: After the X-ray equipment has been installed and placed in operating condition, the X-ray installation shall be tested by a certified health physicist from the American Board of Health Physics or a physicist certified by the American Board of Radiology. Testing shall be performed in accordance with paragraph 4 of NBS's "Handbook 76". Four copies of the physicist's report shall be furnished to the Contracting Officer. Any part of the X-ray shielding work found to be defective shall be corrected or replaced, including all other work affected thereby, at no additional cost to the Government.

2.2 Guarantee: All x-ray protective materials shall be guaranteed to retain the required shielding effectiveness for a period of 5-years from date of testing.

3. SUBMITTALS:

3.1 Tests and Certificates: The testing requirements for materials incorporated in referenced documents will be waived provided the Contractor submits certificates from the manufacturer stating that materials furnished for this project conform to all requirements of this specification and the referenced documents. Material certificates shall be submitted to and approved by the Contracting Officer. Copies of the test reports for sound

rated assemblies shall be submitted to and approved by the Contracting Officer before work is started. Copies of other test reports need not be submitted except as specifically requested by the Contracting Officer.

3.1.1 Sample Certificate: The certificate shall not contain statements that could be interpreted to imply that the product does not meet all requirements specified, such as "as good as"; "achieve the same end use and results as materials formulated in accordance with the referenced specification"; "equal or exceed the service and performance of the specified material". The certificate should simply state that the product conforms to all requirements specified.

SAMPLE CERTIFICATE

The manufacturer hereby certifies that all following products being furnished for this project conform to all requirements of the project specifications and the respective reference specifications:

MANUFACTURER AND PRODUCT	REFERENCE SPECIFICATION
John Doe Company Sheet Lead	QQ-L-201

SIGNATURE AND TITLE

3.2 Shop Drawings: Shop drawings shall be submitted to and approved by the Contracting Officer before work is started. Drawings shall show view window; lead lined gypsum wallboard including elevations and details at doors, view windows, corners, and partition intersections; location of fasteners for lead lined gypsum wallboard; and other details of construction.

3.3 Samples: The following samples shall be submitted to and approved by the Contracting Officer before work is started:

(a) Sheet lead: Two samples 12 inches by 12 inches of each thickness specified.

(b) Lead Glass: Two samples 12 inches by 12 inches of lead glass.

(c) Gypsum Wallboard:

(1) Lead Lined: Two samples 12 inches by 12 inches.

(2) Non-Lead Lined: Two samples 12 inches by 12 inches.

(d) Fasteners: Four of each type.

(e) Gypsum Wallboard Accessories: Two of each type.

(f) Gypsum Wallboard Adhesive: One quart.

(g) View Window: One sample of view window specified, complete. May be used in project.

(h) Plaque: One sample, complete. May be used in project if applicable.

(i) Acoustical Sealant: One tube.

3.4 Manufacturer's Installation Procedures: Manufacturer's current recommended installation procedures for all items specified shall be submitted to and approved by the Contracting Officer before work is started. Installation procedures shall accompany shop drawings.

4. PRODUCT DELIVERY AND STORAGE:

4.1 Delivery: Deliver materials to the Project site in original, unopened packages, containers or bundles bearing the manufacturer's name and brand.

4.2 Storage: Keep all materials dry; protect from weather; and store under cover, above the ground and away from sweating walls or other damp surfaces. Store gypsum wallboard on level surfaces and stack same flat to avoid damage to edges, ends and surfaces.

5. GENERAL: The drawings indicate the location, type and thickness of X-ray shielding materials. Thicknesses indicated for sheet lead and linings are minimum thicknesses acceptable. X-ray shielding work shall be in accordance with the requirements specified herein and with all applicable recommendations of NBS's "Handbook 76". The shielding shall be continuous within its limits; and where other work, materials or accessories penetrate the shielding, lead patches, lead sleeves, or sheet lead shall be installed as required to provide continuity of the shielding. Unless otherwise specified, effective lead laps in the completed installation shall be not less than 1 inch.

6. SOUND RATED ASSEMBLIES: Radiation protection construction shall conform to the performance requirements of ASTM E90 and ASTM E413 for indicated STC ratings.

7. MATERIALS:

7.1 Sheet Lead: Federal Specification QQ-L-201, Grade C.

7.2 Lead Glass: Federal Specification DD-G-451, Type I, Class 1, Quality q3, with a lead equivalent of not less than that of the barrier in which it is installed.

7.3 Gypsum Wallboard:

7.3.1 Lead Lined: Federal Specification SS-L-30, Type III, Grade X, Class 1, Form a, Style 3 (tapered edge) with a single unpierced piece of sheet lead, the same size as the wallboard, laminated to back. A continuous layer of mastic shall be utilized in laminating the sheet lead to the wallboard under hydraulic pressure.

7.3.2 Face Layer: Federal Specification SS-L-30, Type III, Grade X, Class 1, Form a, Style 3 (tapered edge).

7.4 Gypsum Wallboard Accessories: Corner bead and edge trim shall conform to GA-216.

7.5 Gypsum Wallboard Adhesive: Adhesive for fastening gypsum board to gypsum board shall be of type recommended by gypsum wallboard manufacturer.

7.6 Fasteners: Lead washers with drive screws of type recommended by gypsum wallboard manufacturer and having a lead equivalent of not less than that of the barrier in which it is installed.

7.7 View Windows: View window frames shall be fabricated from factory primed painted 18 gage cold rolled steel and lined with the same lead thickness as the wall in which it is installed. Baffled slots shall be provided at the bottom for voice passage. The two separate frames shall telescope together to accommodate wall thickness indicated. Frames shall be constructed as to form a minimum overlap of 3/8 inch at all points of the perimeter of the lead glass. Removable stops shall be provided for glazing. Lead glass for view windows shall be as specified in paragraph entitled "Lead Glass".

7.8 Lead Lined Wood Doors: Lead lined wood doors are specified in section entitled "Wood Doors".

7.9 Door Frames: Door frames are specified in section entitled "Hollow Metal Doors and Frames".

7.10 Plaque: Each room or area which provides radiation protection shall have a plaque designating the lead thickness and lead equivalent of each wall, including view window, mounted at the location directed. Locations where lead thicknesses change or where lead is not continuous shall be indicated on the plaque. Plaques shall be aluminum, Bakelite, or other approved materials and shall be of sufficient size to contain the information required.

7.11 Acoustical Sealant: Type recommended by the wallboard manufacturer to provide STC ratings indicated.

8. INSTALLATION: Install all materials in accordance with manufacturer's recommendations and the following requirements, except sound rated assemblies shall be installed to provide sound ratings indicated.

8.1 Gypsum Wallboard: Gypsum wallboard shall be installed in accordance with GA-216, unless otherwise specified, indicated or recommended by the gypsum wallboard manufacturer.

8.1.1 Lead Lined Gypsum Wallboard: Predrilling or drilling of pilot holes for fasteners in lead lined gypsum wallboard shall be performed as necessary to prevent deformation of the fastener and to prevent distortion of the wallboard. A 2 inch wide strip of sheet lead shall be provided with each sheet and shall be applied to framing system prior to installation of lead lined gypsum wallboard so as to provide a minimum of 1 inch overlap with the adjoining sheet and at all joints. Apply wallboard with long dimensions parallel to vertical supports and with lead lining next to supports. Screw attach lead lined gypsum wallboard to framing with screws spaced not greater than 8 inches on centers at the edges and ends of panels, and at all supports.

8.1.2 Face Layer: Apply face layer with long dimension perpendicular to vertical supports. Face layer shall be applied by adhesive only. Fasteners not permitted.

8.1.3 Gypsum Wallboard Accessories: Install accessories in accordance with GA-216. Fasteners for accessories shall not penetrate lead lining.

8.1.4 Finishing: Joint and corner treatment shall be in accordance with GA-216.

8.2 View Windows: Install view windows in accordance with approved shop drawings and manufacturer's recommendations to provide an effective lead lap with the barrier in which they occur.

8.3 Built-In Items: Where built-in items other than those specified above penetrate lead linings, provisions shall be made for maintaining the continuity of the barrier. Lead patches shall be used for this purpose whenever practicable. Where ducts, conduit, and similar items prevent the use of patches, lead sleeves or lead linings shall be used.

8.4 Sealant Application: Install acoustical sealant to provide STC ratings indicated. Apply sealant as recommended by the manufacturer, filling all cut-outs, openings, voids at floor and ceiling where partitions abut to dissimilar construction, and elsewhere to provide the required sound ratings.

---END---

SECTION 13942X

ENERGY MONITORING AND CONTROL SYSTEMS (EMCS)
INTERFACE MATERIALS

13942

1. APPLICABLE PUBLICATIONS: The following publications of the issues listed below, but referred to thereafter by basic designation only, form a part of this specification to the extent indicated by the references thereto:

1.1 American National Standards Institute (ANSI) Publications:

B9.1-71	Safety Code for Mechanical Refrigeration
B31.1-77	Power Piping
B31.5-74	Refrigeration Piping
C12-1975	Electricity Metering, Code for
C57.13-1968	Requirements for Instrument Transformers

1.2 National Fire Protection Association (NFPA) Publication:

70-1978	National Electrical Code
90A-76	Air Conditioning and Ventilating Systems

1.3 National Electrical Manufacturers Association (NEMA) Publication:

EI 20-75	Watthour Meters

1.4 Electronic Industires Association (EIA) Publication:

RS-232-C	Interface Between Data Terminal Equipment and Data Communication Equipment Employing Serial Binary Data Interchange (Aug 1969).

2. GENERAL REQUIREMENTS: Section 15011, General Requirements, Mechanical, with the following modifications, applies. The work includes providing indicating, alarming, controlling systems interfaces and related work for tie-in to future EMCS installation. Each system shall be complete and ready for operation. Equipment materials, installation, and workmanship shall be in accordance with ANSI B9.1, B31.1, B31.5 and NFPA 70, 90A except as specified or indicated otherwise. In the NFPA standards refered to herein, the advisory provisions shall be considered to be mandatory, as though the word "shall" had been substituted for "should" wherever it appears; reference to the "authority having jurisdiction" shall be interpreted to mean the Contracting Officer.

2.1 Submittals Required: Shop drawings, manufacturer's data and certificates for equipment, materials, finish, and pertinent details for

DIVISION 13. SPECIAL CONSTRUCTION

SECTION 13942X. ENERGY MONITORING AND CONTROL SYSTEMS (EMCS) INTERFACE MATERIALS

2. GENERAL REQUIREMENTS: At the end of this paragraph add the following:

"2.5 As-Built Working Drawings: Upon completion, and before final acceptance of the work, furnish to the Contracting Officer a complete se of as-built working drawings of installation for record purposes. The as-built working drawings shall be not smaller than 30 and 42 inches reproducible drawings on mylar film with title block (8 by 4 inches) similar to full size contract drawings. The as-built working drawings shall be furnished in addition to the as-built contract drawings required by Section 01012: Additional General Paragraphs."

each system shall be submitted and approved before procurement, fabrication or delivery of such items to the job site. Partial submission will not be acceptable. Descriptive data shall be annotated to show the specific model, type and size of each item the Contractor proposes to furnish.

2.2 Manufacturer's Data: The manufacturer's data shall include the following:

a. Terminal cabinets (CO)
b. Sensor devices (each type and component), including complete wiring and connection diagrams (CO)
c. Control devices (each type and component), including complete wiring and connection diagrams (CO)

2.3 Shop Drawings: Shop drawings shall include the following:

a. Terminal cabinets, including terminal blocks. (CO)

2.4 Operation and Maintenance Manuals: Furnish operation and maintenance manuals for all items of equipment listed under "Manufacturer's Data". These manuals shall contain full hardware support documentation, which shall include, without being limited to, the following:

a. General description and specifications
b. Installation and initial checkout procedures
c. Principles and theory of operation
d. Detailed electrical and logical description
e. Complete trouble-shooting procedures, diagrams, and guidelines
f. Complete alignment and calibration procedures for all components
g. Preventive maintenance requirements
h. Detailed schematics and assembly drawings
i. Complete spare parts lists
j. Interface requirements and capabilities
k. Signal identification and timing diagrams

← 2.5

3. EQUIPMENT: Equipment shall conform to the following specifications and to the other requirements specified herein.

3.1 Sensor and Control Devices:

3.1.1 General: Provide all remote sensing points and instrumentation as indicated. All sensors shall be compatible (either industrial or commercial grade) with ATC contractors equipment and shall have accuracies as stated hereinafter. Hysteresis, relaxation time, span, max./min. limits, etc. shall also be accounted for in all applications of sensors and controls.

3.1.2 Field wiring for each binary device shall be two conductor No. 18 AWG or No. 20 AWG, stranded, twisted pair, copper, 300 volt, thermoplastic. For multi-conductor wire having four or more conductors, wire size shall be not less than No. 22 AWG solid copper. All analog inputs shall be wired with shielded, solid copper wire not less than 18 AWG No. 20 AWG, stranded, twisted pair, copper wire, 300 volt, thermoplastic. All wires shall be

terminated with pressure type connectors suitable for wire size and material as well as terminal connection. Wire in physical contact with compression screw shall not be acceptable.

3.1.3 Route conduit and cable from each sensor, control device, fire alarm contact, intrusion alarm device, door holder activation schedule and all other devices as indicated on the Input/Output Schedules. The cabling and conduit shall be routed to the Smoke Area FID Terminal Cabinet.

3.1.4 Temperature Sensors:

3.1.4.1 Temperature sensors shall be thermistor resistance thermocouple type, however thermocouples shall be restricted to temperature range of + 250 degrees F and above. Analog temperature sensors shall provide an output signal that varies continuously with the sensed temperature, within a specified range. Binary temperature sensors shall provide an output signal that is either on or off (i.e., switch closure, typical of residential room thermostat, etc.) depending upon whether the sensed temperature is above or below the setpoint temperature. Temperature sensors shall be suitable for one or more of the following mounting methods:

a) Room Type - shall be suitable for wall mounting, with or without protective guards, occupant setpoint adjustment, and system selection switches.

b) Insertion Type - shall be suitable for insertion into air ducts at any angle, and shall have a minimum insertion of 6 inches.

c) Immersion Type - shall be suitable for immersion into fluids in tanks or pipes with or without separable well and heat transfer compound.

d) Averaging Type with Extended Element - shall be suitable for duct mounting to obtain average temperature by sampling along a capillary tube element not less than 8 feet in length.

e) Safety Type with Extended Element - shall be suitable for duct mounting to detect the coldest temperature in any 1 foot section of 20 foot minimum length capillary element. Typical use-freeze protection of water coils.

All sensors of a particular category in any one building shall be of the same type and manufacturer. Temperature sensors located outdoors shall have sun shades to minimize solar effects and shall be mounted to minimize building outside air film effects.

3.1.4.2 The following shall apply to thermistor, resistance or thermocouple temperature detectors:

a. Stem or tip sensitive types, for insertion or immersion.
b. Sensing elements shall be hermetically sealed.
c. Stem and tip construction shall be 304 stainless steel, copper, glass, or epoxy.

d. All external trim material shall be completely corrosion resistant with all parts assembled into a watertight, vibration-proof, heat resistant assembly.

e. Thermometer wells shall be of bronze, stainless steel, copper, or monel materials. Heat transfer compounds shall be compatible with the sensor. Compression type fittings between sensors and thermometer wells are acceptable.

f. Sensors shall have a time constant response of less than 3 seconds to a temperature change of one degree.

g. Sensors shall operate over the following ranges with the accuracies specified over the noted range of the sensor:
+20 degrees F to +250 degrees F, plus or minus 0.75 degrees F;
+100 degrees F to +500 degrees F, plus or minus 2.0 degrees F;
+250 degrees and up, plus or minus 2.0 degrees F. (Thermocouples only) end to end accuracy.

3.1.5 Differential Pressure Sensors:

3.1.5.1 The entire assembly shall be so constructed that shock, vibration and pressure surges of 25 psi above scale will neither harm the gage nor affect its accuracy.

3.1.5.2 Pressure sensors shall have the following features:

a. Adjustable high and low limits.
b. Suitability for operation in an ambient temperature range required by the service.
c. Accuracy within 1 percent of full scale.
d. Operating range shall be as required for the service.
e. Static pressure taps for ease of inserting a calibration meter.
f. Three value manifolds for isolation and nulling.
g. Blow down valves for steam system installations.

3.1.6 Differential Pressure Switches:

3.1.6.1 All pressure sensing elements shall be corrosion resistant.

3.1.6.2 Pressure sensing elements shall be Bourdon tubes, bellows or diaphragm type.

3.1.6.3 Units shall have adjustable range and differential pressure settings.

3.1.6.4 Pressure sensor switches shall be snap action type with gold plated wiping contacts, rated at 24 volts DC.

3.1.6.5 Sensor assembly shall operate automatically and reset automatically when conditions return to normal.

3.1.6.6 Complete sensor assembly shall be protected against vibration at all critical movement pivots, slides, etc.

3.1.6.7 Sensor Ratings: Sensors shall have the following pressure and accuracy ratings:

a. Chilled, condenser and hot water sensors shall be rated at 125 psig, with an accuracy of plus or minus 1.0 psi.
b. Low and medium steam pressure sensors shall be rated at 150 psig. Low pressure shall operate from 0 to 30 psig with an accuracy of plus or minus 0.5 psi. Medium pressure shall operate from 0 to 100 psig with an accuracy of plus or minus 1.0 psi.
c. High steam pressure sensors shall be rated at 300 psig, have a full operating range of 0-300 psig with an accuracy of plus or minus 2 psi.
d. High temperature water sensors shall be rated at 600 psig and have a full operating range of 0-400 psig with an accuracy of plus or minus 5 psi.
e. Sensors on all steam lines and high temperature water lines shall be protected by pigtail siphons installed between the sensor and the fluid line.
f. Sensors on all steam or liquid lines shall have an isolation valve installed between each sensor and its pressure source.

3.1.7 Relative Humidity Sensors: The sensor shall be an analog precision resistance type Relative Humidity Detector. The sensing element shall be rated for the Relative Humidity Range designed into the building environmental control system. The sensor shall have an overall accuracy of plus or minus 2.5 percent of span over the range of 20 to 80 percent relative humidity.

3.1.8 Watthour Meters and Current Transformers:

3.1.8.1 Meters shall include all 3 phases, test and terminal blocks, watt transducers, and meter connections to the FID for continuous (analog) monitoring of power. Two potential transformers shall be provided for 480 volt 3 wire systems for watthour meter use. Accuracy shall be plus or minus 0.25 percent of full scale. Watthour meters for chiller applications shall in addition have an instantaneous watt indicator with analog or digital display.

3.1.8.2 Watthour meters and sockets shall be in accordance with ANSI C12 and NEMA EI-20.

3.1.8.3 Potential and current transformers shall be in accordance with ANSI C57.13. Potential transformers shall be supplied with two primary fuses.

3.1.9 Remote Reset Controllers:

3.1.9.1 The controller shall be electronic and matched to the device being controlled.

3.1.9.2 The controllers shall have adjustable temperature ranges of plus or minus 12.5 degrees F, plus or minus 25 degrees F, plus or minus 50 degrees F, plus or minus 75 degrees F, or plus or minus 100 degrees F from a nominal temperature for the specific application. Selection shall be

based upon the operating range of the controlled variable. Controllers shall have reset increments no greater than and accuracy not less than that specified for the respective sensor accuracy.

3.1.9.3 Feedback shall be provided for each remote reset controller adjusted set point. If shall be derived through mechanical coupling to driven setpoint adjuster or final control motion (e.g. rotary potentiometer linked to set point screw adjuster or slide wire potentiometer tracking control valve stem position).

3.1.10 Level Indicating Transmitter:

3.1.10.1 Service: Underground fuel oil storage.

3.1.10.2 Type: Provide ultrasonic or capacitance style level indicating transmitter suitable for outdoor environment.

3.1.10.3 Operation:

a. Operate on 115 VC @ 60 Hz.

b. Incorporate automatic temperature compensation covering a minimum of -30 degrees F to 200 degrees F.

c. Incorporate a 0 to 100% adjustable range of no less than 0 to 144 inches.

d. Incorporate an output of 4 to 20 ma linear to tank level.

e. Incorporate an integral 0 to 100% indicator.

f. Incorporate a minimum two points - empty and full - of adjustment for calibration.

3.1.10.4 Miscellaneous Provisions: Provide a 4"-150 lb. carbon steel flange tapped as required for transmitter/element mounting to tank. Transmitter/element is vertical. Calibrated range 0" ti 126".

4. INSTALLATION:

4.1 Sensors and Controls:

4.1.1 General: Provide all remote sensing points and instrumentation as indicated.

4.1.1.1 Wiring from sensors and control devices shall be to terminal block located in the DTC. The terminal block shall be permanently marked for identification. All circuits shall be protected to avoid interruption of service due to short-circuiting or other conditions which might adversely affect the connected devices. The blocks shall be numbered by circuit pairs, such as 1 to 25, 26 to 50, etc. Each individual signaling circuit shall be classified as a circuit pair. All wiring that comes from external sources to the site shall be line protected from lightning and static electricity.

4.1.1.2 Wiring and the installation thereof shall conform to the standards of the National Electrical Code (NFPA 70).

4.1.1.3 Each field wire shall be labeled or coded at each end. Each point of all field terminal strips shall be permanently labeled or coded to show the instrument or item served. Color coded cable with cable diagrams may be used to accomplish cable identification.

4.1.2 Temperature Sensors:

4.1.2.1 All sensors shall be stabilized to such a level as to permit on-the-job installations that will require minimum field adjustments or calibrations.

4.1.2.2 Temperature sensor assemblies shall be readily accessible and adaptable to each type of application in such a manner as to allow for quick, easy replacement and servicing without special tools or skills.

4.1.2.3 Strap-on mountings, utilizing helical screw stainless steel clamps, shall be permitted on hot water piping up to 3 inches only. All other water temperature sensors shall be in wells.

4.1.2.4 Outdoor installations shall be of rainproof construction or in NEMA 3R enclosures. These installations shall be protected from solar radiation and wind effects by stainless steel shields.

4.1.2.5 Sensors shall be with [brushed-aluminum or brushed stainless steel enclosures where located in finished spaces.

4.1.2.6 Sensors in ducts shall be mounted in locations to sense the correct temperature of the air only and shall not be located in dead air spaces or positions obstructed by ducts, equipment, etc. The location of installation shall be within the vibration and velocity limits of the sensing element. Where an extended surface element is required to properly sense the average temperature it shall be securely mounted within the duct in an approved manner and shall be positioned to measure the best average temperature. Elements shall be thermally isolated from brackets and supports to respond to air temperature only. Ducts shall be securely sealed where elements or connections penetrate ducts.

4.1.2.7 All sensors measuring temperatures in pipes larger than 1 inch in diameter, except as noted in paragraph 4.1.2.3 above, or in pressure vessels, shall be provided with wells properly fabricated for the service. Wells shall be non-corrosive to the medium being measured and shall have sufficient physical strength to withstand all (including test) pressures and velocities to which they are subjected. Wells shall be installed in the piping at elbows where piping is smaller than the length of the well to effect proper flow across the entire area of the well. Wells may be installed either looking up-stream or down-stream. Suitable thermal transmission material shall be provided within the well to speed the response of temperature measurement. Wells shall be provided with packing nuts to contain the thermal transmission material and allow for easy removal. Well shall not restrict flow area to less than 70 percent of line-size-pipe normal flow area.

4.1.3 Static Pressure Sensors: Sensors installed outdoors shall be installed in a NEMA 12 enclosure.

4.1.4 Pressure Differential Sensors: Sensors shall be installed in NEMA 3R enclosures and are to be corrosion resistant throughout.

4.2 Terminal Cabinets:

4.2.1 General: Install all terminal cabinets in accordance with instructions given on drawings.

4.2.2 FID Terminal Cabinets shall be in dry interior areas of buildings. Panels shall not be installed adjacent to heat generating devices.

4.2.3 Wiring and the installation thereof shall conform to the standards of the National Electrical Code (NFPA 70).

5. FIELD TESTS AND INSPECTIONS: Upon completion of installation of each piece of equipment, field inspect and mechanically and electrically test equipment for proper function. Submit a certification to the Contracting Officer that each piece of equipment has been field inspected and tested for proper function prior to final system test.

- - - o 0 o - - -

FIRE ALARM DEVICE ANNUNCIATION TABLE

Point Annunciation Summary		Alarm Contacts Located in Fire Alarm Cabinet (FATC or FAEC)
Basement -	Manual Pull Station Smoke Zone BG	BFAEC
Basement -	Smoke Detector Smoke Zone BG	BFAEC
Basement -	Water Flow Switch Smoke Zone BG	BFAEC
Basement -	Valve Supervisory Device Smoke Zone BG	BFAEC
Basement -	AHU-25 Unit - Smoke Detector Smoke Zone BG	BFAEC
Basement -	AHU-40 Unit - Smoke Detector Smoke Zone BG	BFAEC
Basement -	HV-2 Unit - Smoke Detector Smoke Zone BG	BFAEC
Basement -	HV-4 Unit - Smoke Detector Smoke Zone BG	BFAEC
Basement -	Kitchen Hoods Smoke Zone BG	BFAEC
Basement -	Pre-Action Sprinkler System - Wet Pipe Rooms E001, E002, E003 & E004	BFAEC
Basement -	Pre-Action Sprinkler System - Dry Pipe Rooms E001, E002, E003 & E004	
Northeast of Hospital	OS&Y Valve Main Valve Pit	BFAEC
Basement -	Fire Alarm System Trouble	BFAEC
Basement -	Manual Pull Station Smoke Zone BE	BFAEC
Basement -	Thermal Detector Smoke Zone BE	BFAEC
Basement -	Water Flow Switch Smoke Zone BE	BFAEC

Basement -	Valve Supervisory Device Smoke Zone BE	BFAEC
Basement -	HV-5 Unit - Smoke Detector Smoke Zone BE or First Floor 1F	BFAEC
Basement -	HV-6 Unit - Smoke Detector Smoke Zone BE	BFAEC
First Floor -	Manual Pull Station Smoke Zone 1A	1FATCA
First Floor -	Smoke Detector Smoke Zone 1A	1FATCA
First Floor -	Water Flow Switch Smoke Zone 1A	1FATCA
First Floor -	Valve Supervisory Device Smoke Zone 1A	1FATCA
First Floor -	AHU-38 Unit - Smoke Detector Smoke Zone 1A	1FATCA
First Floor -	AHU-39 Unit - Smoke Detector Smoke Zone 1A	1FATCA
First Floor -	Manual Pull Station Smoke Zone 1B1	1FATCB
First Floor -	Smoke Detector Smoke Zone 1B1	1FATCB
First Floor -	Water Flow Switch Smoke Zone 1B1	1FATCB
First Floor -	Valve Supervisory Device Smoke Zone 1B1	1FATCB
First Floor -	AHU-36 Unit - Smoke Detector Smoke Zone 1B1	1FATCB
First Floor -	AHU-37 Unit - Smoke Detector Smoke Zone 1B1	1FATCB
First Floor -	Manual Pull Station Smoke Zone 1B2	1FATCB
First Floor -	Smoke Detector Smoke Zone 1B2	1FATCB

First Floor -	Manual Pull Station Smoke Zone 1C1	1FATCC1
First Floor -	Smoke Detector Smoke Zone 1C1	1FATCC1
First Floor -	Water Flow Switch Smoke Zone 1C1	1FATCC1
First Floor -	Valve Supervisory Device Smoke Zone 1C1	1FATCC1
First Floor -	AHU-33 Unit - Smoke Detector Smoke Zone 1C1	1FATCC1
First Floor -	Manual Pull Station Smoke Zone 1C2	1FATCC1
First Floor -	Smoke Detector Smoke Zone 1C2	1FATCC1
First Floor -	Water Flow Switch Smoke Zone 1C2	1FATCC1
First Floor -	Valve Supervisory Device Smoke Zone 1C2	1FATCC1
First Floor -	AHU-34 Unit - Smoke Detector Smoke Zone 1C2	1FATCC1
First Floor -	AHU-35 Unit - Smoke Detector Smoke Zone 1C2	1FATCC1
First Floor -	Manual Pull Station Smoke Zone 1D2	1FATCD
First Floor -	Smoke Detector Smoke Zone 1D2	1FATCD
First Floor -	Valve Supervisory Device Smoke Zone 1D2	1FATCD
First Floor -	AHU-26 Unit - Smoke Detector Smoke Zone 1D2	1FATCD
First Floor -	AHU-32 Unit Smoke Detector Smoke Zone 1D2	1FATCD
First Floor -	AHU-44 Unit - Smoke Detector Smoke Zone 1D2	1FATCD

First Floor -	Manual Pull Station Smoke Zone 1D1	1FATCD
First Floor -	Smoke Detector Smoke Zone 1D1	1FATCD
First Floor -	Water Flow Switch Smoke Zone 1D1	1FATCD
First Floor -	Valve Supervisory Device Smoke Zone 1D1	1FATCD
First Floor -	AHU-27 Unit - Smoke Detector Smoke Zone 1E1	1FATCD
First Floor -	AHU-28 Unit - Smoke Detector Smoke Zone 1D1	1FATCD
First Floor -	HV-3 Unit - Smoke Detector Smoke Zone 1D1	1FATCD
First Floor -	Manual Pull Station Smoke Zone 1E1	1FATCD
First Floor -	Smoke Detector Smoke Zone 1E1	1FATCD
First Floor -	Water Flow Switch Smoke Zone 1E1	1FATCD
First Floor -	Valve Supervisory Device Smoke Zone 1E1	1FATCD
First Floor -	AHU-43 Unit - Smoke Detector Smoke Zone 1E1	1FATCD
First Floor -	Pre-Action Sprinkler System Rooms E113 and E114	1FATCD
First Floor -	Manual Pull Station Smoke Zone 1E2	1FATCD
First Floor -	Smoke Detector Smoke Zone 1E2	1FATCD
First Floor -	AHU-41 Unit - Smoke Detector Smoke Zone 1E2 and 1F	1FATCD

First Floor -	Manual Pull Station Smoke Zone 1F	1FATCF
First Floor -	Smoke Detector Smoke Zone 1F	1FATCF
First Floor -	Water Flow Switch Smoke Zone 1F	1FATCF
First Floor -	Valve Supervisory Device Smoke Zone 1F	1FATCF
First Floor -	AHU-46 Unit - Smoke Detector Smoke Zone 1F	1FATCF
First Floor -	Manual Pull Station Smoke Zone 1G1	1FATCG
First Floor -	Smoke Detector Smoke Zone 1G1	1FATCG
First Floor -	Water Flow Switch Smoke Zone 1G1	1FATCG
First Floor -	Valve Supervisory Device Smoke Zone 1G1	1FATCG
First Floor -	Manual Pull Station Smoke Zone 1G2	1FATCG
First Floor -	Smoke Detector Smoke Zone 1G2	1FATCG
First Floor -	Water Flow Switch Smoke Zone 1G2	1FATCG
First Floor -	Valve Supervisory Device Smoke Zone 1G2	1FATCG
First Floor -	AHU-30 Unit - Smoke Detector Smoke Zone 1G2	1FATCG
First Floor -	AHU-31 Unit - Smoke Detector Smoke Zone 1G2	1FATCG
First Floor -	Manual Pull Station Smoke Zone 1H	1FATCH
First Floor -	Smoke Detector Smoke Zone 1H	1FATCH

First Floor -	Water Flow Switch Smoke Zone 1H	1FATCH
First Floor -	Valve Supervisory Device Smoke Zone 1H	1FATCH
First Floor -	AHU-29 Unit - Smoke Detector Smoke Zone 1H	1FATCH
Second Floor -	Manual Pull Station Smoke Zone 2A	2FATCA
Second Floor -	Smoke Detector Smoke Zone 2A	2FATCA
Second Floor -	Water Flow Switch Smoke Zone 2A	2FATCA
Second Floor -	Valve Supervisory Device Smoke Zone 2A	2FATCA
Second Floor -	AHU-23 Unit - Smoke Detector Smoke Zone 2A	2FATCA
Second Floor -	AHU-24 Unit - Smoke Detector Smoke Zone 2A	2FATCA
Second Floor -	Manual Pull Station Smoke Zone 2B	2FATCB
Second Floor -	Smoke Detector Smoke Zone 2B	2FATCB
Second Floor -	Water Flow Switch Smoke Zone 2B	2FATCB
Second Floor -	Valve Supervisory Device Smoke Zone 2B	2FATCB
Second Floor -	AHU-21 Unit - Smoke Detector Smoke Zone 2B	2FATCB
Second Floor -	AHU-22 Unit - Smoke Detector Smoke Zone 2B	2FATCB
Second Floor -	AHU-42 Unit - Smoke Detector Smoke Zone 2B	2FATCB

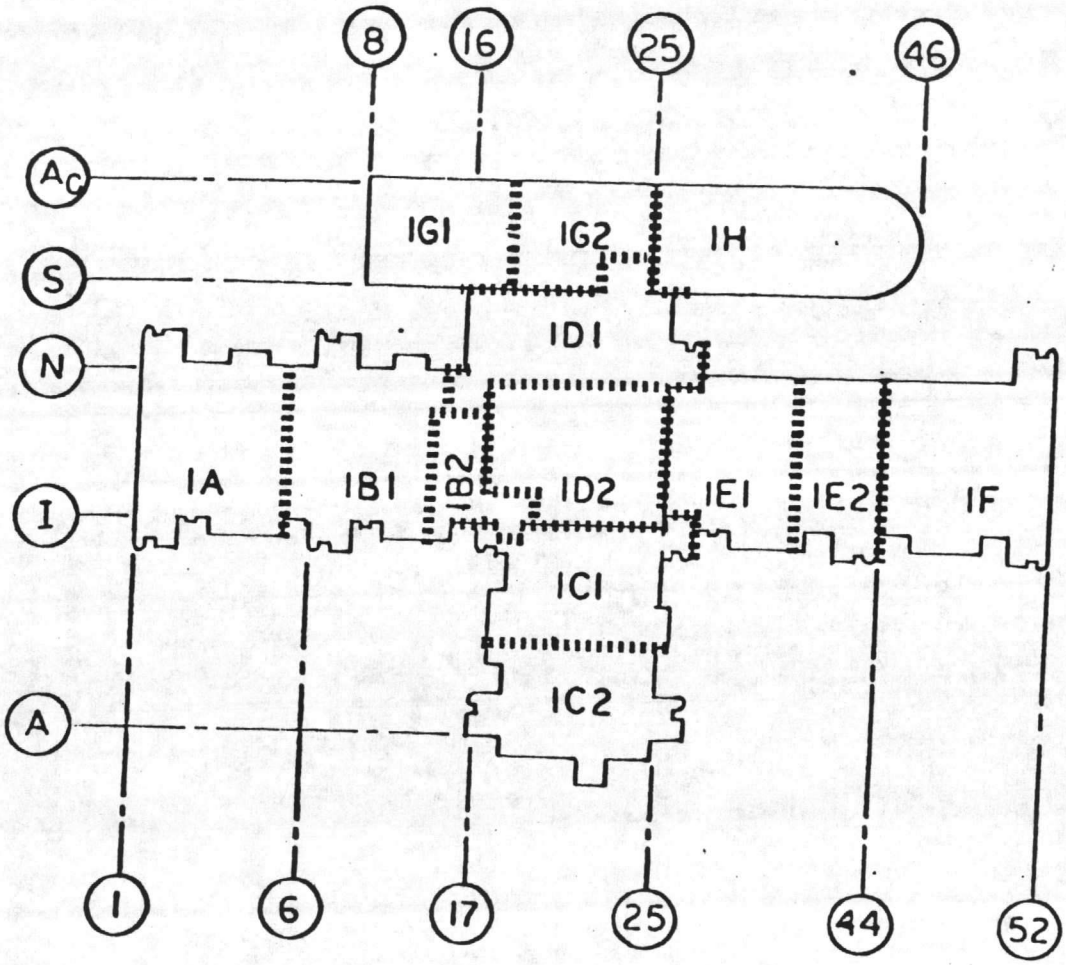

LEVEL 1 - SMOKE ZONES

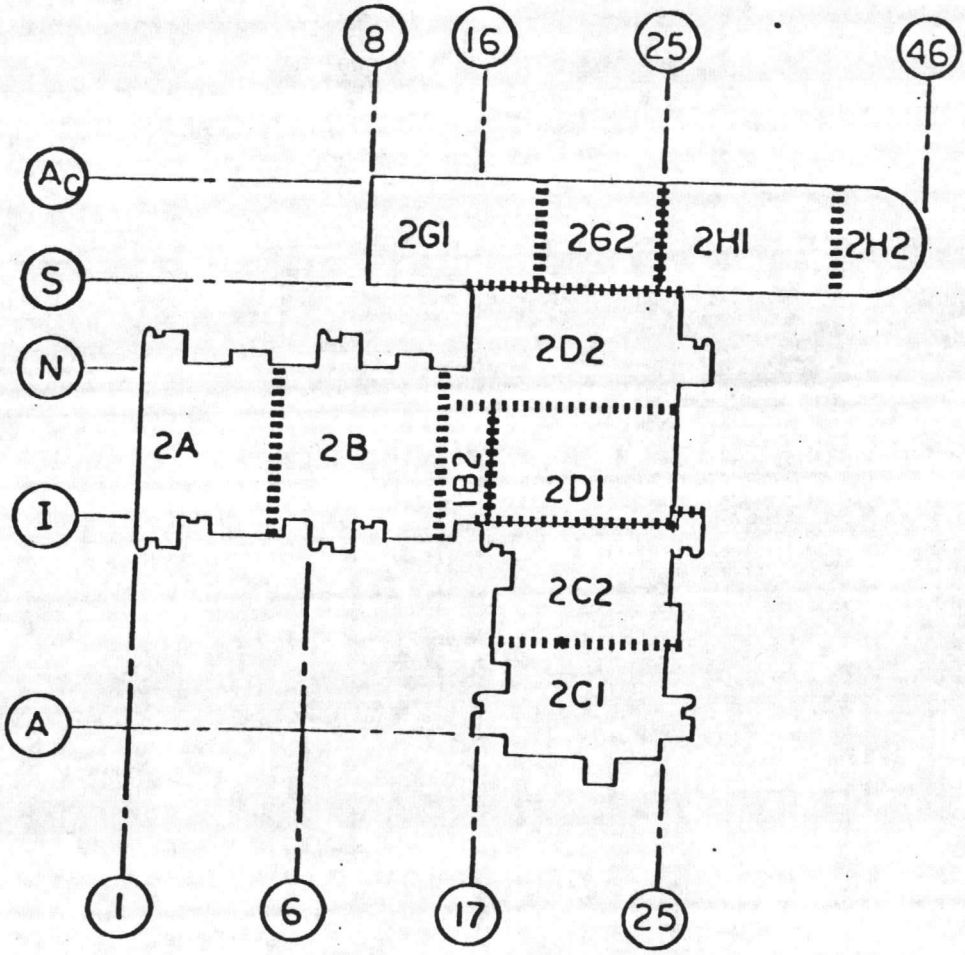

LEVEL 2 - SMOKE ZONES

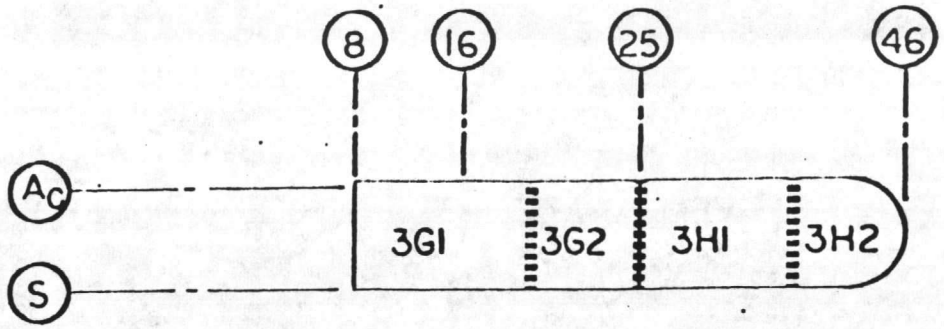

LEVEL 3 - SMOKE ZONES

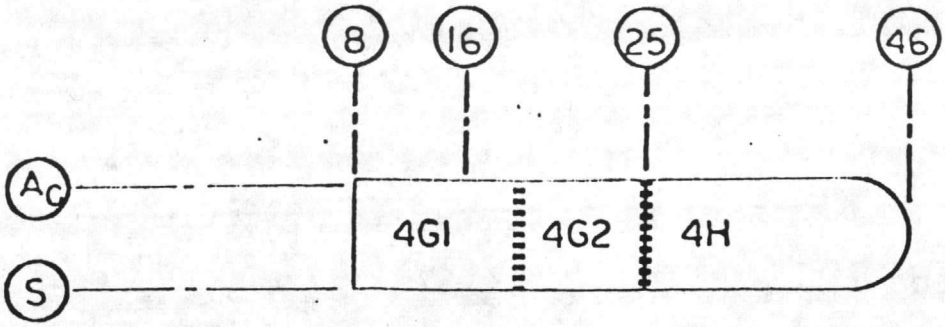

LEVEL 4 - SMOKE ZONES

DOOR HOLDER ACTIVATION SCHEDULE DESCRIPTION

This Schedule indicates the smoke doors to be closed (vertical column) and the area in which the fire alarm originated (horizontal row). The abbreviation and designation are as follows:

"B-1" - Smoke Door - Basement - Door #1

BE - Smoke zone - basement area E

○ - Denotes that smoke door can be found in smoke zone identified.

X - Denotes that smoke door in an adjoining smoke zone is effected. It may be above, below or to the adjacent smoke zone.

DOOR HOLDER ACTIVATION SCHEDULE

| DOOR HOLDER IDENTIFICATION NUMBER | SMOKE ZONE IDENTIFICATION NUMBER | | |

INTRUSION ALARM DEVICE
ANNUNCIATION TABLE

DOOR NO.	POINT ANNUNCIATION PRINTOUT
C 007	Area D - Basement - Corridor C007
C 011	Area D - Basement - Corridor C011
C 013	ARea D - Basement - Corridor C013
E 001	Area E - Basement - Tele. Eq. Rm.
E 003	Area E - Basement - Emerg. Gen. Rm.
E 005	Area E - Basement - Boiler Rm.
E 005A	Area E - Basement - Boiler Rm.
E 005B	Area E - Basement - Chiller Plant
N 002A	Area G - Basement - Corridor N002A
N 004	Area G - Basement - Cashier
N 006	Area G - Basement - Dining Room
N 007	Area G - Basement - Dining Room
M 012	Area D&H - Basement - Mech. Eq. Rm. No. 24
M 013	Area D&H - Basement - Mech. Eq. Rm. No. 25
M 013A	Area D&H - Basement - Stair No. 13
N 031	Area D&H - Basement - Corridor No. 31
M 102B	Area A - First Level - Stair No. 1
M 103D	Area A - First Level - Stair No. 2
M 100B	Area B - First Level - Stair No. 3
M 101D	Area B - First Level - Stair No. 4
W 101	Area B - First Level - Corridor W100
C 101	Area B - First Level - Main Lobby
S 120	Area C - First Level - Corridor S100B
M 105B	Area C - First Level - Stair No. 6
M 106B	Area C - First Level - Stair No. 7
M 107B	Area C - First Level - Stair No. 8
C 113	Area D - First Level - Exchange Retail Sales
C 115	Area D - First Level - Exchange Cafeteria
C 115A	Area D - First Level - Exchange Cafeteria
C 116	Area D - First Level - Exchange Cafeteria
C 119	Area D - First Level - Receiving
C 120	Area D - First Level - Bank
C 122	Area D - First Level - Drug Information
C 123	Area D - First Level - Pharmacy Clerical

C 125	Area D - First Level - Pharmacy
C 125A	Area D - First Level - Pharmacy
Roll Up Doors	Area D - First Level - Pharmacy
C 142	Area D - First Level - Collection Agent
C 143	Area D - First Level - Collection Agent
E 101	Area E - First Level - Corridor E100
E 102	Area E - First Level - Blind Sales
E 102A	Area E - First Level - Blind Sales
E 103	Area E - First Level - Blind Sales
E 122	Area E - First Level - Public Post Office
E 123	Area E - First Level - USPS Work Rm.
E 125	Area E - First Level - USPS Receiving
M 110B	Area E - First Level - Stair No. 11
E 126	Area E - First Level - Dispersing
E 126A	Area E - First Level - Dispersing
E 100D	Area F - First Level - Corridor E100C
E 136B	Area F - First Level - Corridor E136B
E 153	Area F - First Level - Flammable Storage
E 154	Area F - First Level - Medical Supply Storage
E 154A	Area F - First Level - Medical Supply Storage
E 154B	Area F - First Level - Medical Supply Storage
E 154C	Area F - First Level - Medical Supply Storage
E 154F	Area F - First Level - Medical Supply Storage
E 156	Area F - First Level - Receiving
E 157	Area F - First Level - Stock Control
E 159	Area F - First Level - Hospital Issue Area
E 162	Area F - First Level - Narcotic Vault & Secured Storage
E 164	Area F - First Level - Security Vault
E 165	Area F - First Level - Oxygen Storage
E 167A	Area F - First Level - Storage
N 101	Area G - First Level - Corridor N101
N 119A	Area G - First Level - Library
M 116	Area G - First Level - Stair No. 14
M 114B	Area G - First Level - Stair No. 12
N 112A	Area G - First Level - Corridor N101A & N101B
N 138	Area H - First Level - Administrative Area
N 144	Area H - First Level - Administrative Area
N 150	Area H - First Level - Medical Records Transcribing
N 147	Area H - First Level - Mech. Eq. Rm. No. 26
M 113	Area H - First Level - Mech. Eq. Rm. No. 26
M 115	Area H - First Level - Stair No. 15

S 249	Area C - Second Level - Emergency
S 256	Area C - Second Level - Corridor 200B
S 257	Area C - Second Level - Corridor 223B
N 400I	Area H - Fourth Level - Roof
N 400H	Area H - Fourth Level - Roof
M 415	Area H - Fourth Level - Stair No. 15
M 415A	Area H - Fourth Level - Stair No. 15
M 302	Penthouse - Stair No. 1
M 302A	Penthouse - Stair No. 1
M 307	Penthouse - Stair No. 2
M 307A	Penthouse - Stair No. 2
M 300	Penthouse - Stair No. 3
M 300A	Penthouse - Stair No. 3
M 301B	Penthouse - Stair No. 4
M 301C	Penthouse - Stair No. 4
M 304	Penthouse - Stair No. 5
M 304A	Penthouse - Stair No. 5
M 305	Penthouse - Stair No. 6
M 305A	Penthouse - Stair No. 6
M 306	Penthouse - Stair No. 7
M 306A	Penthouse - Stair No. 7
M 303	Penthouse - Stair No. 8
M 303A	Penthouse - Stair No. 8
M 309	Penthouse - Stair No. 10
M 309A	Penthouse - Stair No. 10
M 210	Penthouse - Stair No. 11
M 210A	Penthouse - Stair No. 11

Abbreviations used on Input/Output Summary Sheets, **Pages 13942X-31 through 13942X-42:**

RM	Refrigeration Machine
CT	Cooling Tower
P	Pumps
RF	Return Fan
EF	Exhaust Fan
AHU	Air Handling Unit
HV	Heating and Ventilating
CHS	Chilled Water Supply
CWS	Condenser Water Supply
HWR	Hot Water Return
HWS	Hot Water Supply
R.H. Supply	Relative Humidity
LVT PHC/HRC	Leaving Pre-Heat/Heat Recovery
D.B.	Dry Bulb
RI/SI	Ref. Area/Controlling System
gpm	gallons per minute
lb	pounds

Second Floor -	Manual Pull Station Smoke Zone 2C1	2FATCC1
Second Floor -	Smoke Detector Smoke Zone 2C1	2FATCC1
Second Floor -	Water Flow Switch Smoke Zone 2C1	2FATCC1
Second Floor -	Valve Supervisory Device Smoke Zone 2C1	2FATCC1
Second Floor -	AHU-19 Unit - Smoke Detector Smoke Zone 2C1	2FATCC1
Second Floor -	AHU-20 Unit - Smoke Detector Smoke Zone 2C1	2FATCC1
Second Floor -	Pre-Action Sprinkler System Emergency Area	2FATCC1
Second Floor -	Manual Pull Station Smoke Zone 2C2	2FATCC2
Second Floor -	Smoke Detector Smoke Zone 2C2	2FATCC2
Second Floor -	Water Flow Switch Smoke Zone 2C2	2FATCC2
Second Floor -	Valve Supervisory Device Smoke Zone 2C2	2FATCC2
Second Floor -	AHU-18 Unit - Smoke Detector Smoke Zone 2C2	2FATCC2
Second Floor -	Manual Pull Station Smoke Zone 2D1	2FATCD
Second Floor -	Smoke Detector Smoke Zone 2D1	2FATCD
Second Floor -	Water Flow Switch Smoke Zone 2D1	2FATCD
Second Floor -	AHU-16 Unit - Smoke Detector Smoke Zone 2D1	2FATCD
Second Floor -	Valve Supervisory Device Smoke Zone 2D1	2FATCD

Second Floor -	Pre-action Sprinkler System Operating Suite	2FATCD
Second Floor -	Manual Pull Station Smoke Zone 2D2	2FATCD
Second Floor -	Smoke Detector Smoke Zone 2D2	2FATCD
Second Floor -	Manual Pull Station Smoke Zone 2G1	2FATCG
Second Floor -	Smoke Detector Smoke Zone 2G1	2FATCG
Second Floor -	Water Flow Switch Smoke Zone 2G1	2FATCG
Second Floor -	Valve Supervisory Device Smoke Zone 2G1	2FATCG
Second Floor -	AHU-11 Unit - Smoke Detector Smoke Zone 2G1	2FATCG
Second Floor -	AHU-12 Unit - Smoke Detector Smoke Zone 2G2	2FATCG
Second Floor -	Manual Pull Station Smoke Zone 2G2	2FATCG
Second Floor -	Smoke Detector Smoke Zone 2G2	2FATCG
Second Floor -	Pre-Action Sprinkler System Bassinett Area	2FATCG
Second Floor -	Manual Pull Station Smoke Zone 2H1	2FATCH
Second Floor -	Smoke Detector Smoke Zone 2H1	2FATCH
Second Floor -	Water Flow Switch Smoke Zone 2H1	2FATCH
Second Floor -	Valve Supervisory Device Smoke Zone 2H1	2FATCH

Second Floor -	AHU-13 Unit - Smoke Detector Smoke Zone 2H1	2FATCH
Second Floor -	AHU-14 Unit - Smoke Detector Smoke Zone 2H1	2FATCH
Second Floor -	Smoke Detector Smoke Zone 2H2	2FATCH
Second Floor -	Water Flow Switch Smoke Zone 2H2	2FATCH
Second Floor -	Valve Supervisory Device Smoke Zone 2H2	2FATCH
Second Floor -	Pre-Action Sprinkler System Intensive Care Unit	2FATCH
Third Floor -	Manual Pull Station Smoke Zone 3G1	3FATCG
Third Floor -	Smoke Detector Smoke Zone 3G1	3FATCG
Third Floor -	Water Flow Switch Smoke Zone 3G1	3FATCG
Third Floor -	Valve Supervisory Device Smoke Zone 3G1	3FATCG
Third Floor -	AHU-7 Unit - Smoke Detector Smoke Zone 3G1	3FATCG
Third Floor -	Manual Pull Station Smoke Zone 3G2	3FATCG
Third Floor -	Smoke Detector Smoke Zone 3G2	3FATCG
Third Floor -	AHU-8 Unit - Smoke Detector Smoke Zone 3G2	3FATCG
Third Floor -	Manual Pull Station Smoke Zone 3H1	3FATCH
Third Floor -	Smoke Detector Smoke Zone 3H1	3FATCH
Third Floor -	Water Flow Switch Smoke Zone 3H1	3FATCH

Third Floor -	Valve Supervisory Device Smoke Zone 3H1	3FATCH
Third Floor -	AHU-10 Unit - Smoke Detector Smoke Zone 3H1	3FATCH
Third Floor -	AHU-9 Unit - Smoke Detector Smoke Zone 3H1	3FATCH
Third Floor -	Smoke Detector Smoke Zone 3H2	3FATCH
Third Floor -	Pre-Action Sprinkler System Coronary Care Unit	3FATCH
Fourth Floor -	Manual Pull Station Smoke Zone 4G1	4FATCG
Fourth Floor -	Smoke Detector Smoke Zone 4G1	4FATCG
Fourth Floor -	Water Flow Switch Smoke Zone 4G1	4FATCG
Fourth Floor -	Valve Supervisory Device Smoke Zone 4G1	4FATCG
Fourth Floor -	Manual Pull Station Smoke Zone 4G2	4FATCG
Fourth Floor -	Smoke Detector Smoke Zone 4G2	4FATCG
Fourth Floor -	AHU-4 Unit - Smoke Detector Smoke Zone 4G2	4FATCG
Fourth Floor -	AHU-6 Unit - Smoke Detector Smoke Zone 4H	4FATCH
Fourth Floor -	Manual Pull Station Smoke Zone 4H	4FATCG
Fourth Floor -	Smoke Detector Smoke Zone 4H	4FATCG
Fourth Floor -	Water Flow Switch Smoke Zone 4H	4FATCG

Fourth Floor -	Valve Supervisory Device Smoke Zone 4H	4FATCG

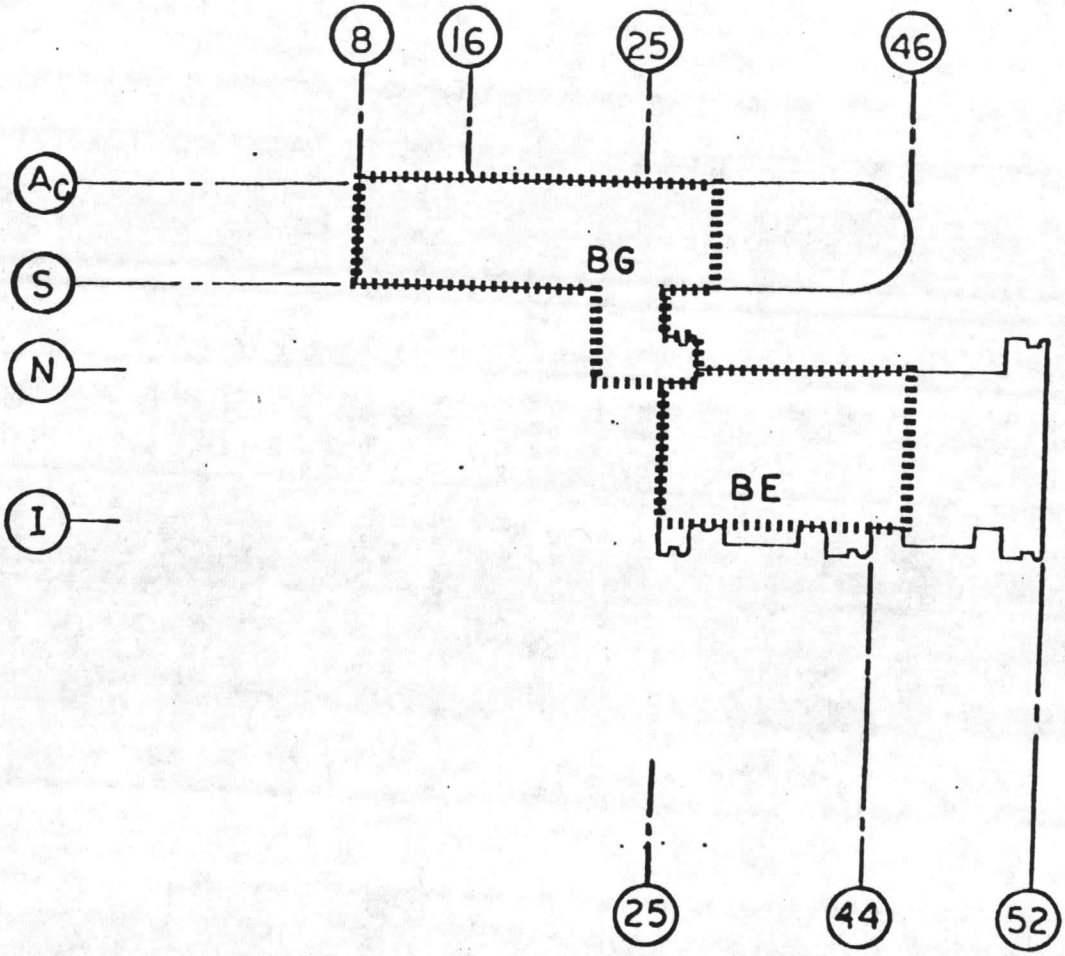

BASEMENT LEVEL - SMOKE ZONES

DRAWING AND SPECIFICATION TRANSMITTAL

J. Grubbs

LOCKWOOD GREENE ENGINEERS, INC.
SPARTANBURG, SOUTH CAROLINA 29304
P.O. BOX 491 (803)582-2351

TO Commander
Atlantic Division
Naval Facilities Engineering Command
Norfolk, Va. 23511
ATTN: Code 09A21A - L.F. Butts

DATE April 23, 1979
JOB NO. 77239.04
JOB NAME LANTDIV

TRANSMITTAL NO.
SHEET 1 OF 1
ORDER NO.

WE ARE SENDING YOU THE FOLLOWING DATA XX HEREWITH _____ UNDER SEPARATE COVER

QUAN.	DOCUMENT NO.	REV. NO.	DESCRIPTION	VENDOR	COD
1	13942X-31		I/O Schedules		
	13942X-32		I/O Schedules		
	13942X-33		I/O Schedules		
	13942X-34		I/O Schedules		
	13942X-35		I/O Schedules		
	13942X-36		I/O Schedules		
	13942X-37		I/O Schedules		
	13942X-38		I/O Schedules		
	13942X-39		I/O Schedules		
	13942X-40		I/O Schedules		
	13942X-41		I/O Schedules		
	13942X-42		I/O Schedules		

CODE FOR

LOCKWOOD GREENE DOCUMENTS		VENDOR DOCUMENTS
A - INFORMATION	E - BID	K - NO CORRECTIONS NOTED
B - REVIEW	F - CONSTRUCTION	L - MAKE CORRECTIONS NOTED
C - APPROVAL	G - PURCHASING	M - REVISE AND RESUBMIT
D - REVISED DWG. (SEE REVISION)	H -	N - REJECTED (SEE REMARKS)

COPIES TO	QUAN	TRANS ONLY	CODE	COPIES TO	QUAN	TRANS ONLY	COD

REMARKS These are originals you requested us to send readable copies.

PLEASE ACKNOWLEDGE RECEIPT BY IMMEDIATE RETURN OF SIGNED COPY OF THIS TRANSMITTAL

RECEIVED BY _____ DATE _____ TRANSMITTED BY George T. Leonard

| POINT DESCRIPTION / EQUIPMENT | DISCRETE POINTS | | | | | | | | | | | | | | | | | | | | | ANALOG POINTS | | | | | | | | | | | | | | | | | | |

| POINT DESCRIPTION / EQUIPMENT | DISCRETE POINTS | | | | | | | | | | | | | | | | | | | | ANALOG POINTS | | | | | | | | | | | | | | | | | | |

| POINT DESCRIPTION / EQUIPMENT | DISCRETE POINTS | | |

POINT DESCRIPTION / EQUIPMENT	DISCRETE POINTS: CONTROL: START/STOP	STATUS INDICATION WITH ALARM: ON/OFF	STATUS INDICATION WITH ALARM: FAILURE	GENERAL	MAINTENANCE ALARMS: TOTALIZED RUN TIME-HOURS	ANALOG POINTS: VALUE INDICATION WITH HI-LO ALARM	ANALOG POINTS: VALUE INDICATION	PROGRAMS: PROGRAMS
EF-124		X			X			
EF-147		X			X			
EF-43		X			X			
EF-4 thru EF-32	X	X			X			
EF-33	X	X			X			
EF-34 thru EF-42	X	X			X			
EF-44	X	X			X			
EF-45	X	X			X			
EF-46	X	X			X			
EF-47	X	X			X			
EF-48	X	X			X			
EF-49	X	X			X			
EF-93, EF-94	X	X			X			
EF-95, EF-96	X	X			X			
EF-97, EF-98, EF-99	X	X			X			
EF-101, EF-102	X	X			X			
EF-105, EF-106, EF-107	X	X			X			
EF-109, EF-110, EF-111	X	X			X			
EF-112, EF-113, EF-114	X	X			X			
EF-115, EF-116, EF-117	X	X			X			
EF-118, EF-122	X	X			X			
EF-125, EF-132	X	X			X			
EF-133, EF-134	X	X			X			
EF-135, EF-136	X	X			X			
EF-145, EF-146	X	X			X			
EF-148	X	X			X			
EF-108, EF-119	X	X			X			

| POINT DESCRIPTION / EQUIPMENT | DISCRETE POINTS | | |

| POINT DESCRIPTION / EQUIPMENT | DISCRETE POINTS | | | | | | | | | | | | | | | | | | | | | | ANALOG POINTS | | | | | | | | | | | | | | | | | | |

	POINT DESCRIPTION / EQUIPMENT	DISCRETE POINTS: CONTROL ON/OFF	DISCRETE POINTS: STATUS INDICATION WITH ALARM ON/OFF	DISCRETE POINTS: STATUS INDICATION WITH ALARM HIGH TEMP.	DISCRETE POINTS: GENERAL ALARM	DISCRETE POINTS: MAINTENANCE ALARMS	ANALOG POINTS: VALUE INDICATION WITH HI-LO ALARM	ANALOG POINTS: VALUE INDICATION	PROGRAMS
1/S1	FROZEN STORES		X	X					
2/S2	MEAT THAW REFRIG.		X	X					
3/S3	REFRIGERATOR STORES		X	X					
4/S4	ISSUE REFRIGERATOR		X	X					
5/S5	PRODUCE REFRIGERATO		X	X					
6/S6	DAIRY REFRIGERATOR		X	X					
	CCTV WINDOW								
	WIPER								
	POSITION 1	X							
	POSITION 2	X							
	POSITION 3	X							
	POSITION 4	X							
	CCTV CAMERAS								
	POSITION 1	X							
	POSITION 2	X							
	POSITION 3	X							
	POSITION 4	X							
	POSITION 5	X							
	POSITION 6	X							
	POSITION 7	X							
	POSITION 8	X							
	POSITION 9	X							
	PANIC SWITCH-								
	PHARMACY				X				
	MOTION DETECTOR								
	NARCOTIC VAULT				X				

05-77-7526
13942X-37

| POINT DESCRIPTION / EQUIPMENT | DISCRETE POINTS | | |

POINT DESCRIPTION / EQUIPMENT	DISCRETE POINTS				ANALOG POINTS		PROGRAMS
	CONTROL	STATUS INDICATION WITH ALARM	GENERAL	MAINTENANCE ALARMS	VALUE INDICATION WITH HI-LO ALARM	VALUE INDICATION	PROGRAMS
	ON/OFF	ON/OFF	TOTALIZED RUN TIME-HOURS				
PUBLIC ADDRESS SYSTEM AMPLIFIERS							
1. Entrance PUBLIC ADDRESS	X						
ELECTRIC MOTORS (REFER TO DIVISION 16)		X		X			

05-77-7526
13942X-39

POINT DESCRIPTION / EQUIPMENT	DISCRETE POINTS														ANALOG POINTS			PROGRAMS
	CONTROL				STATUS INDICATION WITH ALARM										GENERAL		MAINTENANCE ALARMS	VALUE INDICATION WITH HI-LO ALARM	VALUE INDICATION	PROGRAMS
					RUNNING	MALFUNCTION	LOW OIL	LOW WATER TEMPERATURE	HIGH WATER TEMPERATURE	OVERCRANK	OVERSPEED								TEMPERATURE OF	
Emergency Generator Alarms											X									
Generator No. 1					X	X	X	X	X	X	X									
Generator No. 2					X	X	X	X	X	X	X									
Generator No. 3					X	X	X	X	X	X	X									
Solar Domestic Hot Water Generating System																			X	

| POINT DESCRIPTION / EQUIPMENT | DISCRETE POINTS | | | | | | | | | | | | | | | | | | ANALOG POINTS | | | | | | | | | | | | | | | | | |

| POINT DESCRIPTION / EQUIPMENT | DISCRETE POINTS | | |

| POINT DESCRIPTION / EQUIPMENT | DISCRETE POINTS | | |

| POINT DESCRIPTION / EQUIPMENT | DISCRETE POINTS | | | | | | | | | | | | | | | | | | | | | | ANALOG POINTS | | | | | | | | | | | | | | | | | | |

POINT DESCRIPTION / EQUIPMENT	DISCRETE POINTS: CONTROL	DISCRETE POINTS: STATUS INDICATION WITH ALARM: Failure	Low Level	High Level	High/Low Pressure	Low Pressure	On / Off	DISCRETE POINTS: GENERAL	DISCRETE POINTS: MAINTENANCE ALARMS	ANALOG POINTS: VALUE INDICATION WITH HI-LO ALARM: Level (Gallons)	Temperature	ANALOG POINTS: VALUE INDICATION: Steam Flow (lbs/Hr.)	Fuel Flow (gal./min.)	PROGRAMS
e Water														
System					X									
Generator														
Overflow Tank				X										
team Supply						X								
al Feed Unit #1			X											
			X											
			X											
at Recovery			X											
Feedwater						X								
No. 1			X									X	X	
No. 2			X									X	X	
il														
(4 Req.)										X				
TR : E (lo)											X			
(REFG (oil)											X			
OF BLOOD														
ANK											X			
-SUB GRID														
SITE											X			
AT MRBT														
PLUGIN				X		X								

05-77-7526
13942X-33

Amendment #3

Corrected Copy

| POINT DESCRIPTION / EQUIPMENT | DISCRETE POINTS | | | | | | | | | | | | | | | | | | | | ANALOG POINTS | | | | | | | | | | | | | | | | | | |

POINT DESCRIPTION / EQUIPMENT	DISCRETE POINTS																								ANALOG POINTS																								PROGRAMS																							
	CONTROL				STATUS INDICATION WITH ALARM																GENERAL				MAINTENANCE ALARMS				VALUE INDICATION WITH HI-LO ALARM																				VALUE INDICATION								PROGRAMS																			
	START/STOP	SUPPLY AIR TEMP. RESET	COLD DECK RESET	HOT DECK RESET	ON/OFF	FAILURE	SMOKE DET. NO. 2	FREEZESTAT													GRAPHIC DISPLAY				TOTALIZED RUN TIME-HOURS	HIGH PRE-FILTER PRESSURE DROP	HIGH AFTER-FILTER PRESSURE DROP		RETURN AIR TEMP. °F.	RETURN AIR HUMIDITY %RH	DISCHARGE AIR TEMP. °F.	MIXED AIR TEMP. °F.	R.H. SUPPLY - %	HOT DECK TEMP. °F.	COLD DECK TEMP. °F.	LVG PHC/HRC TEMP. °F.																	TEMP. OF OUTSIDE AIR °F.	TEMP. OF O.S.A./R.A.	R.H. OUTSIDE AIR																		

POINT DESCRIPTION / EQUIPMENT	DISCRETE POINTS																				ANALOG POINTS		PROGRAMS	
	CONTROL				STATUS INDICATION WITH ALARM										GENERAL								VALUE INDICATION WITH HI-LO ALARM	VALUE INDICATION	PROGRAMS	
					RUNNING	TROUBLE	CONTROLLER "OFF" POS.	CONTROLLER MANUAL POS	LOW FUEL	RESERVE IN USE	HIGH PRESSURE	LOW PRESSURE	POWER FAILURE	LOW LIQUID LEVEL	EMERGENCY RESERVE LOW	BASEMENT LEVEL	FIRST LEVEL	SECOND LEVEL	THIRD LEVEL	FOURTH LEVEL	ELEVATOR CAR PERSONNEL ALARM				
DIESEL FIRE PUMP					X	X	X	X	X															
ELECTRIC FIRE PUMP					X								X											
NITROGEN GAS SYS.										X	X	X												
DRY PIPE VALVE												X												
NITROUS OXIDE GAS SYSTEM										X	X	X												
OXYGEN SYSTEM										X	X	X		X	X									
MEDICAL VACUUM SYS.											X	X												
MEDICAL AIR SYSTEM											X	X												
ANESTHETIC GAS SCAVENGING SYSTEM											X	X												
DENTAL AIR SYSTEM											X	X												
ELEVATOR #1															X	X	X	X	X	X				
ELEVATOR #2															X	X	X	X	X	X				
ELEVATOR #4															X	X	X	X	X	X				
ELEVATOR #5															X	X	X	X	X	X				
ELEVATOR #7															X	X	X	X	X	X				
ELEVATOR #8															X	X	X	X	X	X				
ELEVATOR #10															X	X	X	X	X	X				
ELEVATOR #11																X	/			X				
ELEVATOR #12																X	/			X				
ELEVATOR #13																X	/			X				
ELEVATOR #14																X	/			X				
ELEVATOR #9																X	/			X				
ELEVATOR #15															X	X				X				
ELEVATOR #16																X	X			X				
																X	X			X				

05-77-7526
13942X-36

POINT DESCRIPTION / EQUIPMENT	DISCRETE POINTS: CONTROL	DISCRETE POINTS: STATUS INDICATION WITH ALARM			DISCRETE POINTS: GENERAL	DISCRETE POINTS: MAINTENANCE ALARMS	ANALOG POINTS: VALUE INDICATION WITH HI-LO ALARM	ANALOG POINTS: VALUE INDICATION	ANALOG POINTS: PROGRAMS
	ON/OFF	ON/OFF	HIGH TEMP.	LOW TEMP	ALARM				
R1/S1 FROZEN STORES		X	X						
R2/S2 MEAT THAW REFRIG.		X	X	X					
R3/S3 REFRIGERATOR STORES		X	X	X					
R4/S4 DESSERT REFRIGERATOR		X	X	X					
R5/S5 PRODUCE REFRIGERATOR		X	X	X					
R6/S6 DAIRY REFRIGERATOR		X	X	X					
CCTV WINDOW									
WIPER									
POSITION 1	X								
POSITION 2	X								
POSITION 3	X								
POSITION 4	X								
CCTV CAMERAS									
POSITION 1	X								
POSITION 2	X								
POSITION 3	X								
POSITION 4	X								
POSITION 5	X								
POSITION 6	X								
POSITION 7	X								
POSITION 8	X								
POSITION 9	X								
PANIC SWITCH-									
PHARMACY					X				
MOTION DETECTOR					X				
NARCOTIC VAULT									

05-77-7526
13942X-37

| POINT DESCRIPTION / EQUIPMENT | DISCRETE POINTS | | | | | | | | | | | | | | | | | | | | | | | | | | | | | | | | ANALOG POINTS | | | | | | | | | | | | | | | | | | | | | | | | | | | | | | | | PROGRAMS | | | | | | | | | | | | | | | | | | | | | | | | | | | | | | | |
|---|---|---

POINT DESCRIPTION / EQUIPMENT	DISCRETE POINTS				ANALOG POINTS		PROGRAMS
	CONTROL	STATUS INDICATION WITH ALARM	GENERAL	MAINTENANCE ALARMS	VALUE INDICATION WITH HI-LO ALARM	VALUE INDICATION	PROGRAMS
	ON/OFF			UTILIZED RUN TIME-HOURS			
PUBLIC ADDRESS							
SYSTEM AMPLIFIERS							
1. Entrance							
PUBLIC ADDRESS	X						
ELECTRIC MOTORS (REFER TO DIVISION 16)		X		X			

| POINT DESCRIPTION / EQUIPMENT | DISCRETE POINTS | | | | | | | | | | | | | | | | ANALOG POINTS | | | | | | | | | | | | | | | |

| POINT DESCRIPTION / EQUIPMENT | DISCRETE POINTS | | | | | | | | | | | | | | | | | | | | ANALOG POINTS | | | | | | | | | | | | | | | | | | |

POINT DESCRIPTION / EQUIPMENT	DISCRETE POINTS				ANALOG POINTS		PROGRAMS
	CONTROL	STATUS INDICATION WITH ALARM	GENERAL	MAINTENANCE ALARMS	VALUE INDICATION WITH HI-LO ALARM	VALUE INDICATION	PROGRAMS
	START/STOP						
Smoke Zone 1H	X						
Second Level							
2A	X						
2B	X						
1B2	X						
2C1	X						
2D1	X						
2D2	X						
2G1	X						
2G2	X						
2H1	X						
2H2	X						
Level 3							
3G1	X						
3G2	X						
3H1	X						
3H2	X						
Level 4							
4G1	X						
4G2	X						
4H	X						

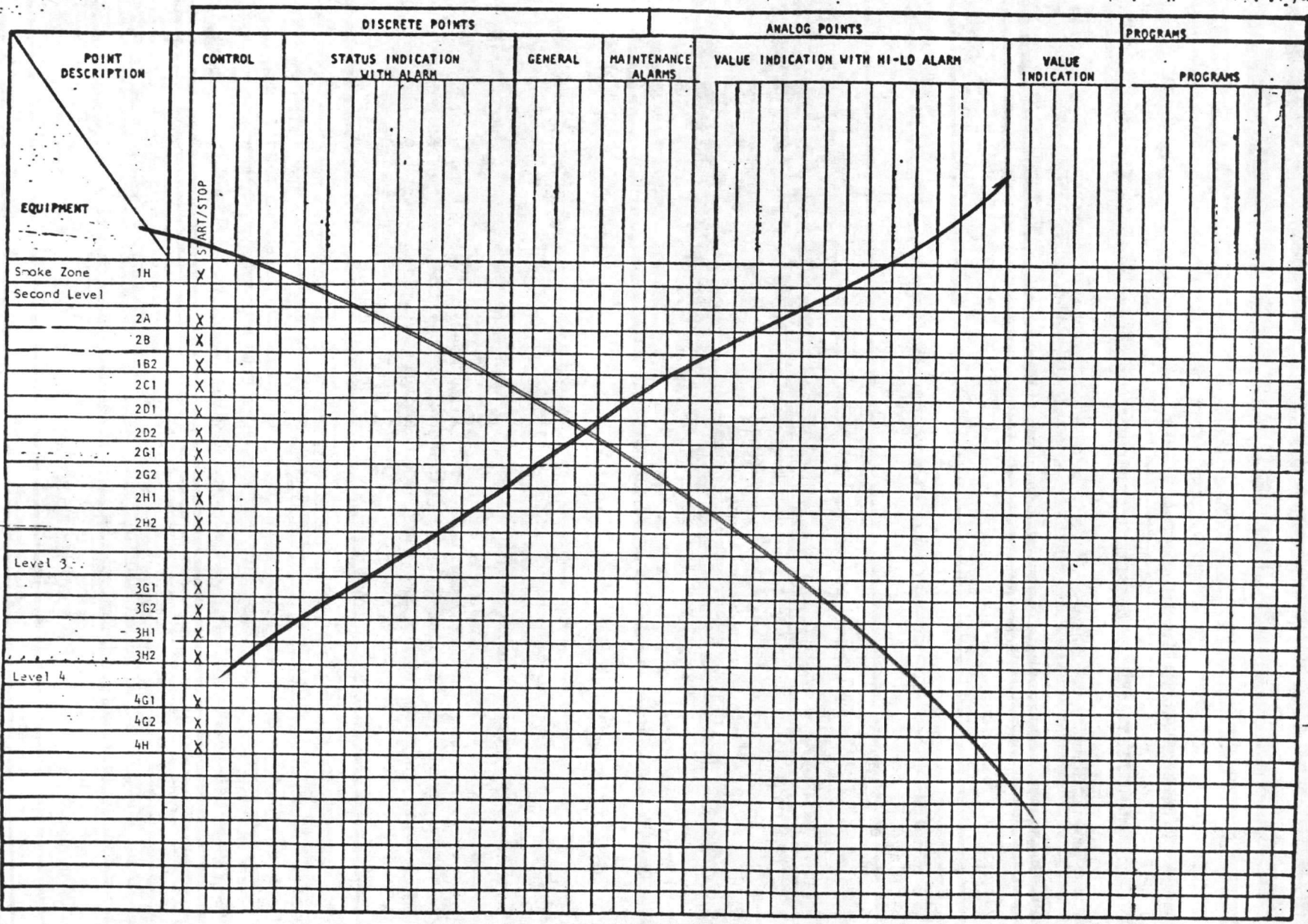

POINT DESCRIPTION / EQUIPMENT	DISCRETE POINTS: CONTROL — START/STOP	DISCRETE POINTS: STATUS INDICATION WITH ALARM	DISCRETE POINTS: GENERAL	DISCRETE POINTS: MAINTENANCE ALARMS	ANALOG POINTS: VALUE INDICATION WITH HI-LO ALARM	ANALOG POINTS: VALUE INDICATION	PROGRAMS: PROGRAMS
Smoke Zone 1H	X						
Second Level							
2A	X						
2B	X						
1B2	X						
2C1	X						
2D1	X						
2D2	X						
2G1	X						
2G2	X						
2H1	X						
2H2	X						
Level 3							
3G1	X						
3G2	X						
3H1	X						
3H2	X						
Level 4							
4G1	X						
4G2	X						
4H	X						

05-77-7526
13942-45

SECTION 14200. ELECTRIC ELEVATORS

1. APPLICABLE PUBLICATIONS: The following publications of the issues listed below, but referred to thereafter by basic designation only, form a part of this specification to the extent indicated by the references thereto:

1.1 American National Standards Institute (ANSI) Publications:

A 17.1 - 1978	Elevators, Dumbwaiters, Escalators, and Moving Walks, Safety Code for.
A 17.2 - 1973	Elevators, Escalators, and Moving Walks, Practice for the Inspection of.

1.2 Institute of Electrical and Electronic Engineers, Inc. (IEEE) Publication:

43	Testing Insulation Resistance of Rotating Machines (March 1961).

1.3 National Electric Manufacturer's Association (NEMA) Publication:

MG-1-1976	Motors and Generators.

1.4 National Fire Protection Association (NFPA) Publication:

70-78	National Electric Code.

2. QUALITY CONTROL:

2.1 General: Approvals, except those required for field installations, field applications and field tests, shall be obtained before delivery of materials to the project site.

2.2 Elevator Construction Experience and Certification: Prior to award, the low bidder shall submit data for the approval of the Contracting Officer which will show that he has successfully built and installed elevators of the same type and of the same control features as specified herein, or that he has a firm contractual agreement with a subcontractor having such required experience. The data shall include the name and locations of at least two installations where the low bidder, or the subcontractor referred to above, has installed such elevators. The low bidder shall indicate the type, size, rise, speed, load, and the control features employed at these installations and certify that these elevators have performed satisfactorily in the manner intended for a period of not less than 18 months.

2.3 Elevator Manufacturer: The elevator manufacturer shall be regularly engaged in the business of manufacturing, installing, and servicing elevators of the type and character required by these specifications. All electric elevators specified herein and all hydraulic elevators specified under section

entitled "Hydraulic Passenger Elevators" shall be furnished by same manufacturer. The elevator manufacturer shall be the manufacturer of the entire machines, controllers, and all other parts of the elevator operating equipment, including the signal system, and of all the mechanism constituting the various electrical and mechanical safety devices. The elevator manufacturer shall have an established service office, at the time of bidding, located within 50 miles of the job site. This office shall be staffed with sufficient personnel and stocked with spare parts to render prompt and efficient maintenance service.

3. SUBMITTALS:

3.1 Shop Drawings: Shop drawings shall be submitted to and approved by the Contracting Officer before work is started. They shall contain enough detailed information to determine that the equipment conforms to the requirements of this specification.

3.2 Certified Laboratory Test Reports: Before delivery of materials, certified copies in triplicate of the reports of all tests required in referenced publications shall be submitted to and approved by the Contracting Officer before work is started. The testing shall have been performed by an approved independent laboratory, within one year of submittal of reports for approval. Test reports on a previously tested material shall be accompanied by certificates from the manufacturer certifying that the previously tested material is of the same type, quality, manufacturer, and make as that proposed for this project.

3.3 Operation and Maintenance Instructions: Three complete sets of neatly and substantially bound operating and maintenance instructions shall be furnished to the Contracting Officer. Operating portion may be bound separately for maintenance portion. Operating instructions shall include detailed information relative to type, method, and sequence of controls and operation with sufficient illustrations to prevent misinterpretation. Maintenance instructions shall include complete detailed data sufficient for adequately servicing the complete system, repairing, and ordering of all replacement parts, and shall be fully illustrated for clarity. Any components or methods peculiar to a particular system shall be included in detail.

3.4 Wiring Diagrams: Complete wiring and single line diagrams showing the electrical connections, functions, and sequence of operation of all apparatus connected with the elevators, both in the machine room and in the hoistway, shall be furnished in duplicate. One set shall be framed in approved manner and mounted in the elevator machine room. The other set shall be delivered to the Contracting Officer.

3.5 Lubrication Chart: One framed lubrication chart shall be furnished and mounted as directed in the elevator machine room. Chart shall include lubricants as well as lubrication points.

4. DELIVERY AND STORAGE: The elevators shall be shipped, handled, and stored in a manner that will prevent damage. Material shall be stored in a clean dry location. All damaged material shall be replaced or repaired in an approved manner at the expense of the Contractor.

5. REPAIRS: Damage to the elevator equipment caused by the Contractor, or damage to the building caused by the failure of any part of the equipment to operate properly, shall be made good without expense to the Government.

6. REGULAR MAINTENANCE SERVICE: Regular maintenance service on the elevator shall be provided for a period of one year after the date of acceptance by the Government. Normally, this work shall be done during regular working hours; however, the service shall include 24-hour emergency call-back service during this period without additional cost to the Government. The maintenance service shall include regular weekly examinations of the installation by competent and trained employees and shall include all necessary adjustments, greasing, oiling, equipment cleaning, and supplies and parts to keep the equipment in good operable condition. Repair of damage as the result of misuse, accidents, or negligence being excluded.

7. GUARANTEE: All materials and parts shall be guaranteed for a period of one year from date of acceptance by the Government.

8. GENERAL: This specification includes the following electric traction type passenger elevators:

8.1 Elevators No. 1 and 2: The cars shall operate at 500 feet per minute, shall have a capacity of 4,500 pounds, shall have automatically operated doors, shall be variable voltage gearless type, shall have a length of travel as indicated, and shall serve five landings with each elevator having one entrance at each landing. The car platform shall be of size indicated. Door opening shall be 4'-0" wide by 7'-0" high.

8.2 Elevators No. 4 and 5: The cars shall operate at 350 feet per minute, shall have a capacity of 4,500 pounds, shall have automatically operated doors, shall be variable voltage geared type, shall have a length of travel as indicated, and shall serve five landings with each elevator having one entrance at each landing. The car platform shall be of size indicated. Door opening shall be 4'-0" wide by 7'-0" high.

8.3 Elevators No. 7 and 8: The cars shall operate at 200 feet per minute, shall have a capacity of 4,000 pounds, shall have automatically operated doors, shall be variable voltage geared type, shall have a length of travel as indicated and shall serve five landings with front and rear entrances at Basement and Level 1 and front entrances only at remaining Levels. The car platform shall be of size indicated. Door openings shall be 3'-6" wide by 7'-0" high.

9. GENERAL REQUIREMENTS: The installation, including equipment, material, workmanship, design, and tests shall be in accordance with the standard rules and specifications referenced, except as specified otherwise. The equipment shall be safe in operation, shall be of durable design and construction, and shall be the product of a manufacturer engaged in the manufacture and installation of this type of equipment. The design and construction of the equipment and parts subject to wear shall be such that similar machines and devices will be completely interchangeable, and all working parts will be accessible for inspection, servicing, and repair. Adequate means shall be provided for the lubrication of all wearing parts that require lubrication.

"9.1x Handicapped Markings: Special markings shall be provided for car buttons, car controls, and hoistway door jambs meeting the minimum requirements of National Elevator Industry, Inc.'s "Suggested Minimum Passenger Elevator Requirements for the Handicapped" dated July 1976 and revised May 1977."

10. CAR OPERATION AND CONTROL:

10.1 Emergency Stop Switch and Alarm Button: An emergency stop switch and alarm button shall be provided in the car operating panel. Operation of the stop switch shall interrupt the power supply and apply the brake independently of the regular operating device. The emergency stop switch and emergency alarm button shall be connected to one alarm bell to serve as emergency signal. The alarm bell, including conduit and wiring, shall be located in the hoistway. Provide a set of dry contacts on each emergency alarm button and circuit in traveling cable from each car to their respective machine room and connect to Field Interface Device (FID) terminal cabinet specified in Division 13.

10.2 Inspection Control Buttons: Inspection control buttons shall be provided on top of car and arranged so they can be used to operate the elevator for inspection purposes. This control shall consist of five buttons marked "Up", "Down", "Safety", "Emergency Stop Switch" (red in color), and a "Transfer Switch". The "Up" and "Down" shall operate only when the "Safety" is held in.

10.3 Car and Hoistway Door Control: The car and hoistway doors shall open automatically after the car has fully stopped at a landing or while in the leveling zone. The doors shall close after a predetermined time unless a car button is pressed when the doors shall close immediately. Pressure of a landing button at the floor at which a car is standing with closed doors shall open the doors. The doors may be reopened from the car by pressing the "Door Open" button. Doors shall be arranged to remain open for a time period sufficient to meet Handicapped Requirements.

10.4 Motor-generator Control: The motor-generator set shall start automatically in response to pressure of a call or dispatch button, and shall continue to run for a predetermined time interval after the car has answered its last call, when it shall automatically stop.

10.5 Simplex Selective Collective Automatic Operation (Elevators No. 7 and 8): The operation of the elevator shall be from pushbuttons at the landings and in the car. An "Up" and a "Down" button shall be provided at each intermediate landing. A single button shall be provided at terminal landings. A series of push buttons numbered to correspond to the various landings shall be provided in the car operating panel. If the car is at the main floor, and the hoistway and car doors are closed, and one or more car or landing buttons are pressed, the car will proceed to and stop in ascending sequence at the landing corresponding to the "Up" buttons pressed regardless of the sequence in which the buttons are pressed, provided the button for a given landing is pressed sufficiently in advance of the arrival of the car at that landing to permit the stop to be made. The car will continue in the "Up" direction stopped consecutively at the designated landings until the car has stopped at the highest landing for which an "Up" or "Down" button has been pressed. The car, after responding to the highest landing or car call, will reverse automatically, even though not at the top terminal, and will start down, stopping consecutively in response to all down landing or car calls registered in advance of the arrival of the car at those landings. An adjustable automatic load weighing device shall be provided designed to bypass registered landing calls, without interfering with the operation of the elevator, when the car is loaded to approximately 80 percent of its rated capacity independent of the weight of the hoisting ropes and compensating chains, but shall not prevent the operation of the car if loaded beyond the preset value. The actual setting of the device shall be as directed. The bypassed calls shall remain registered until such calls are answered. The operation of the emergency stop switch shall not cancel the registered calls, and after the switch is again closed, the car shall resume answering registered calls. All car movements shall be subject to the interlock and door contact circuits being established. A time limit relay shall be provided, designed to hold the car at the landing at which it has stopped for a predetermined period unless the car or hoistway door is held open, before it will start automatically in response to other calls. The car shall remain parked at the floor of the last call with car and hoistway doors closed.

10.6 Multiple Zoning Operation for Two Cars (Elevators 1, 2, 4 and 5): The building shall be divided into three (3) zones with one car assigned to the "Lobby" zone and the other car assigned to the top zone. Each car shall park in its assigned zone when there are no unanswered calls.

10.6.1 The lobby zone shall include the lobby, basements and adjacent floors above the lobby. The remainder of the floors shall be divided between the top zone and the middle zone. Either car may answer calls in the middle zone but neither car shall park in that zone.

10.6.2 The first car entering a parking zone shall be assigned to that zone. The car in the lobby zone shall park at the lobby or other pre-designated floor. The car entering the top zone with no calls registered shall stop at the lowest floor in that zone.

10.6.3 If hall calls do exist under these conditions, the car shall proceed to the first call in its direction of travel. If the hall calls exist in the opposite direction of its travel, it shall proceed to the furthest call within its zone.

10.6.4 A car arriving at a floor to park shall not open its doors. Cars shall open their doors only when stopping in response to a car or hall call.

10.6.5 Cars shall respond to hall calls within their assigned parking zone and all car calls. Should a car, after answering a hall call within its zone, travel outside its zone by a car call, it shall lose its zone assignment and shall not become an assigned car until it enters a parking zone which has no assigned car.

10.6.6 Any car traveling in answer to car call demands or any unassigned car moving to an unoccupied parking zone shall stop for hall calls which are registered in its direction of travel.

10.7 Emergency Power Operation: Elevators shall return automatically to the main floor at full rated speed, one at a time in each bank, on emergency power. A car that is out of service for other reasons shall be passed by and another car selected. A manual keyed selector switch shall be provided at the Basement floor for each bank, which shall contain a contact position for each elevator and an automatic position, permitting one elevator in each Bank to be selected to remain on emergency power or to provide power to an elevator that had been out of service when the elevators were being returned automatically.

10.8 Special Emergency Operation: Upon receiving signals from smoke detectors in elevator lobbies, elevators shall return to a designated floor in compliance with ANSI Code A17.1, Rule 211.3. The Basement Level shall be the parking floor for special emergency operation, with Level 1 as the alternate parking floor.

10.9 Special Operation (Elevators No. 7 and 8): Elevators shall have front and rear openings at the first and second landings. One opening at each of the two landings shall be key operated so that a car or hall call cannot be registered for those openings, except when the key is in the on position. A separate key switch shall be provided for the car operating panel and each hall pushbutton fixture for the first and second landings.

10.10 Operating Station: Car operating station shall consist of a service cabinet with a locked door and a flush mounted car operating panel.

10.10.1 Service Cabinet: Service cabinet shall contain the following:

a. Car light switch.

b. Top-of-car inspection switch.

c. Independent service switch (Elevators No. 1, 2, 4 and 5).

d. Switch for by-pass of door light-ray devices.

e. Provisions for telephone.

10.10.2 Operating Panel: Operating panel shall contain the following car operating devices:

a. Illuminating operating pushbuttons numbered to correspond to the landings served.

b. Emergency stop button (red).

c. Emergency alarm bell button.

d. Door open button.

e. Door close button.

f. Ventilation fan switch.

g. Key operated switch for control of rear door opening for Elevators No. 7 and 8.

11. ELEVATOR MACHINES:

11.1 General: The elevator machines shall be of the geared traction type and gearless traction type as specified. All rotating parts shall be properly balanced to eliminate vibration. Conduits shall terminate a short distance from the connection points at the equipment. No single ground, accidental short circuit, motor field discharge, or counter voltage shall retard or prevent effective brake operation whenever intended. Machines and controller frames in the elevator machine room shall be finished in accordance with the manufacturer's standard practice. Elevator control, and other panels shall be identified by means of numbers applied by decals. All iron work, metal fittings, and other uncoated ferrous surfaces exposed in the hoistway, machinery room and areas adjacent thereto, except machined surfaces which serve as a metal-to-metal base or coupling surface for another unit, shall be cleaned and painted with one coat of approved rust-inhibiting paint and one coat of black paint. Governors shall not be painted. The machine drum shall be of a diameter not less than 40 times the diameter of the hoist rope.

11.2 Spare Parts: Spare parts required for the ordinary maintenance of the elevators including a complete set of fuses and metal or carbon contacts for all control equipment shall be provided. The spare parts shall be placed in a cabinet (approximately 18 inches by 18 inches by 36 inches) provided by the contractor with doors equipped with a lock and two keys. The cabinet shall be mounted in the machinery room as directed.

11.3 Geared Traction Hoisting Machine (Elevators No. 4, 5, 7 and 8): The hoisting machine shall be of the worm geared traction type with motor, brake, worm gearing traction sheave, and bearings mounted on a common bedplate of high strength cast steel or welded structural steel. The bedplate shall be heavily ribbed or properly reinforced to provide the rigidity required to maintain accurate alignment of all parts. The bedplate shall have a raised lip at edge to prevent oil drips, or suitable drip pans shall be provided. The traction sheave shall be of hard alloy cast iron, cast steel or semi-steel, suitably grooved to produce proper traction and of sufficient thickness to provide for future wear in grooves. Secondary sheaves shall be provided with suitable guards able to withstand shock and prevent ropes from leaving their proper grooves. Sound isolation of an approved type shall be provided to effectively isolate geared machines from the machine beams or floor to prevent transmission of machine vibrations to the building structure.

11.3.1 Bearings: The bearing pedestals shall be rigidly fastened to, or be integral with the main structure of bedplate or the machine frame and properly aligned. The bearings shall be either of the anti-friction bearing metal sleeve type or of ball or roller bearing type. Bearings of anti-friction metal shall be of ample size for the loads imposed and shall be provided with oil reservoirs, automatic self-lubrication, oil gages and drain plug or cocks. Bearing pressures shall not exceed 400 pounds per square inch for babbitt and 800 pounds per square inch for bronze. Roller and ball bearings shall be arranged for grease lubrication and be provided with grease-gun connections, except ball or roller bearings which are immersed in an oil bath or are oil-lubricated by splash or positive feed. Plain cast-iron bearings will be permitted for worm shaft bearings provided the bearing pressure does not exceed 300 pounds per square inch, and provided they are immersed in oil or subject to oil-flood lubrication. The machine shall have the highest grade double acting thrust bearing of the ball or roller type. Bearing shall have two sets of balls or rollers arranged to eliminate back lash, or it shall have other approved equipment for this purpose. Thrust bearing shall be removable without dismantling machine.

11.3.2 Worm and Worm Gear: The worm shall be integral with the worm shaft, and shall be accurately cut from a solid steel forging or heat treated steel bar stock. The worm gear shall have an accurately machined bronze rim of such composition that the gear will not show appreciable wear after one year's service. It shall be of such diameter relative to that of the driving sheave that the maximum pressure between worm gear and worm will not exceed a safe value. Worm gear shall have the bronze rim secured to a cast iron center by tightly fitted turned bolts in reamed holes, with the nuts positively secured in an approved manner. Bolt holes through the outer peripheral joint of center and rim will not be permitted. Gears shall operate without appreciable noise, and shall cause no appreciable vibration in the car.

11.3.2.1 Gear Case: Gear case for enclosing worm and worm gear shall be constructed of high strength cast iron, arranged to hold a body of oil. Gear case shall be provided with gasketed handholes for inspection of gear and with approved means at worm shaft to prevent oil leakage. If a stuffing box is

used, it shall be arranged to prevent rattling at all compressions of packing, and a suitable receptacle shall be provided and suitably fitted in place to collect oil dripping from stuffing box.

11.3.3 Brake: The brake shall be in two sections, of the shoe type, and shall be so designed as to be effective to the extent of stopping and holding the car under all conditions of loading or operation up to 125 percent of rated load. Brake shoes shall be applied by springs under compression and the pressure shall be adjustable. The brake drum shall be keyed or shrunk direct to worm shaft, and shall be carefully balanced and shall have the wearing surface and edge of flange turned smooth. The wearing surface shall run true within a maximum variation of 0.005-inch. The brake shoes shall be lined with a suitable fireproof friction material so shaped to the shoe that the drum will run free with a normal clearance. Brake shall be for direct current operation only and shall be released by an electromagnet and applied by springs. The brake magnet shall be so designed that the release will be quick, and the brake application shall be automatically controlled to obtain noiseless, smooth, and gradual stops with either light or loaded car. The circuit of the brake magnet shall be opened by the several safety devices to apply the brake at both limits of travel, when car attains excessive speed, when stop is initiated by car operating device, when safety switch is opened, or on failure of current.

11.3.4 Motor with Motor-Generator Field Control: The hoisting machine motor for a geared elevator with motor-generator field control shall conform to NEMA MG-1 and be as specified herein. The motor shall be of the direct current type, designed to develop the required high starting torque with a low starting current. The motor shall be suited in all respects to the generator field control used. The motor shall be ruggedly designed and all parts shall be capable of meeting the severe requirements of elevator service. The motor shall be rated in accordance with the standards of the IEEE for 50 degrees C, 30-minute rating for class A insulation and shall have sufficient capacity to operate elevator with rated contract load at rated contract speed without overheating.

11.3.4.1 The armature shall be electrically balanced, and armature with brake drum shall be mechanically balanced. Field coils shall be spool or form wound. All windings in both armature and field shall permit reasonably easy renewal. All coils shall be impregnated and baked to prevent absorption of moisture and oil. Insulation shall be Class A as defined by IEEE Standards.

11.3.4.2 The commutator shall be insulated with mica or an approved material thermally and electrically equal to mica. Commutator and brushes shall be of sufficient size, area and design to permit operation under all conditions of loading without excessive heating and sparking, and with the same brush setting for all loads and speeds within the capacity range. The brushes shall have individual tension adjustments and means shall be provided for adjusting and positively locking the brush holder as a unit.

11.3.4.3 For Elevators No. 4 and 5, the motor shall have sufficient capacity and suitable characteristics in connection with the type of control used, to produce an average rate of acceleration under full load of not less than 3 feet per second per second nor more than 5 feet per second per second measured from the start of car motion to the time of attaining 80 percent of the contract speed. For Elevators No. 7 and 8, the rate of acceleration under full load shall be not less than 2 feet per second per second nor more than 4 feet per second per second measured from the start of car motion to the time of attaining 80 percent of the contract speed. The rate of acceleration shall permit adjustment after installation and the final adjustment shall be such as not to produce any objectionable physiological effect on the passengers.

11.3.4.4 The speed of the motor when operated with controller in full speed position shall not vary more than 10 percent of the normal rated speed under all loads within the capacity range.

11.3.4.5 The insulation resistance between conductors and the frame of motor shall be not less than one megohm. The dielectric shall successfully pass a dielectric test of twice the normal rated voltage plus 1000 RMS volts of 60 Hertz alternating current applied for one minute.

11.3.4.6 The design of frames, end bells, etc., shall be such as to insure perfect alignment of bearings and minimize vibration. The end of motor shaft shall be arranged to receive a crank, or other provision shall be made to permit the turning of motor shaft by the application of a suitable tool. One crank or tool shall be furnished for this purpose.

11.3.4.7 The motor bearings shall be either of the anti-friction bearing metal type with oil reservoirs, automatic self lubrication, oil gauges, capped filler openings and drains or of the ball or roller type arranged for grease lubrication and fitted with grease gun connections and drain plugs. The bearings and lubricant reservoirs shall be virtually dust-tight and shall incorporate effective lubricant seals or other means to prevent lubricant leakage.

11.4 Gearless Traction Hoisting Machine (Elevators No. 1 and 2): The hoisting machine shall be of the gearless traction type with slow speed motor, traction driving sheave and brake drum compactly mounted on a single shaft. The machines shall operate smoothly and with a minimum of noise and vibration. The elevator shall be substantially stopped before the brake is applied; means shall be provided to obtain quiet, smooth and gradual stops with either empty or loaded car. The traction sheave shall be of hard alloy cast iron, cast steel, or grooved to produce the required traction and of sufficient thickness to provide for future wear in the grooves. Secondary sheaves shall be provided with suitable guards able to withstand shock and prevent the ropes from leaving their proper grooves.

11.4.1 Brake: The brake shall be electromechanical, consisting of a brake drum, two brake shoes suitably supported from the machine bed, two heavy springs to apply the brake, and an electromagnet to release the brake. The

brake drum shoes and springs shall be of sufficient size and strength to stop and hold the car when carrying 125 percent of rated load. The brake drum shall have the wearing surface and edge of the flange turned true and smooth, and the wearing surface shall run true within a maximum variation of 0.005 inch. The brake shoes shall be lined with a suitable fireproof friction material shaped to the shoe so that the drum will run free with a small clearance. The spring shall be helical, operate in compression, and shall apply the brake when released by the magnet. The brake magnet shall be so designed that the release shall be quick and the brake application shall be automatically controlled by magnetic retardation to obtain noiseless, smooth, and gradual stops under all conditions of loading. The circuit of the release magnet coil shall be opened directly or indirectly (1) upon the normal stopping of the car, (2) upon failure of any of the several units of the equipment to function properly for the safe operation of the car, (3) by the various safety devices, or (4) by current failure.

11.4.2 Bearings: The hoisting machine shaft shall be of forged steel or close grain electric furnace cast steel and shall be supported by two bearings mounted on machine bedplate, or integral with machine frame. The bearing mounting and method of machining and assembly shall insure accurate bearing alignment. Bearings shall be either of the sleeve type or of the roller-bearing type, as approved. The bearings and lubricant reservoirs shall be virtually dust-tight and shall include effective lubricant seals or other means to prevent lubricant leakage. The bearing pressure for sleeve type babbit lined bearings shall not exceed 400 pounds per square inch and for bronze bearings shall not exceed 800 psi. The outer end of bearings shall be closed with a removable oil-tight plate or cap. Bearings of the sleeve type shall be provided with automatic self-lubrication, oil reservoirs, capped filler openings, drain plugs or cocks, and oil gauges. Roller bearings shall be arranged for grease lubrication and shall be fitted with grease gun connections.

11.4.3 Bedplate: The bedplate shall be of high strength cast iron or steel in one piece, either separate or integral with machine frame, or it may consist of heavy structural steel shapes welded together. The bedplate shall be heavily ribbed or reinforced to provide the rigidity required to maintain accurate alignment of parts. Accurately machined surfaces shall be provided to seat all parts secured to the bedplate or machine frame. Brackets or other extensions used as supports for principal parts shall be integral finished bolts or cap screws. Tapered dowels shall be used to accurately locate parts where necessary to insure proper positioning and alignment.

11.4.4 Hoisting Motor: The motor shall conform to NEMA MG-1, shall operate on direct current, and shall be designed to develop the required high-starting torque with a low-starting current. Motor shall be suited in all respects to the generator field control used, and all parts shall be capable of meeting the severe requirements of elevator service.

11.4.4.1 The temperature rise of the motor, when tested under full load by inserting thermometers into the various windings, shall not exceed 50

degrees C above ambient temperature. Motor shall be within 5 degrees C of ambient temperature at the time of starting test.

11.4.4.2 The motor nameplate shall state the rated horsepower, speed, volts, amperes, and other characteristics required by NEMA. All windings in both armature and field shall permit reasonably easy renewal, and all coils shall be impregnated and baked. Insulation shall be Class A as defined by IEEE Standards. The speed of the motor when operated with controller in full-speed position shall not vary more than 5 percent of the normal rated speed under all loads within the capacity range. The insulation resistance between conductors and the frame of motor shall be not less than one megohm. The dielectric shall successfully pass a breakdown test of twice the rated voltage of the motor plus 1,000 RMS volts, 60 Hertz, alternating current applied for one minute.

11.4.4.3 The commutator shall be insulated with mica or an approved material thermally and electrically equal to mica. Commutator and brushes shall be of sufficient size, area, and design to permit operation under all conditions of loading without excessive heating and sparking, and with one brush setting for all loads and speeds within the capacity range. The brushes shall have individual tension adjustments, and means shall be provided for adjusting and positively locking the brush holder as a unit.

12. CONTROL EQUIPMENT:

12.1 General: The elevator control shall be variable voltage type with automatic leveling. The elevator controller and the floor selector shall be designed to control the starting, stopping, and speed of the elevator motor to give the operation herein specified. All control equipment shall be enclosed in sheet metal cabinets with removable or hinged doors and provided with ventilating louvers. Controller mounting shall be designed to prevent transmission of vibration or noise to the building. Conduits shall not be fastened directly to or supported by the controller frame, starter frame, or machinery. Operational circuits of the controllers shall be of the solid state design.

12.2 Motion Controller: A controller shall be provided for each elevator. The controller shall contain electromagnetic switch mounted on a panel of approved material which shall be securely mounted on a substantial self-supporting steel frame designed for floor mounting. Bottom edge of the controller panel shall clear the floor by at least 6 inches. The controller shall provide the required electrical operation of the elevator control system including the automatic application of the machine brake which shall bring the car to rest, upon failure of power or upon the operation of any of the elevator safety devices. Controllers shall be spaced to allow addition of third car in Bank 1 and 2, and Bank 4 and 5.

12.3 Operational Controller: An operation controller shall be provided having the necessary solid state devices for car operational and group supervisory control.

12.4 Switch and Relay Contacts: Switch and relay contacts shall be provided on the controller panel, shall be designed to prevent sticking due to fusing. The controller circuit shall be designed so as to minimize arcing across contacts. All wiring shall be mounted on the rear of the panel, neatly formed either vertically or horizontally and cleated. The wiring on the back of the panel shall have flame resistant type insulation. All connections to field apparatus shall be made at clearly designated junction blocks and/or studs.

12.5 Floor Selector: A floor selector shall be provided and it shall be designed to provide the automatic operation, stopping, and leveling of the elevator car and automatic signal operation by means of properly designed switches. The selector shall be of approved construction with separate rows of switches for the up and for the down operation. Bottom edge of floor selector panel shall clear the floor by at least 6 inches.

12.6 Self-leveling Feature: Each elevator shall be provided with a self-leveling feature that will automatically bring the car floor to within 1/2-inch of level with the floor landing regardless of load, stretch of hoisting ropes, or direction of travel. This self-leveling shall, within its zone, be entirely automatic and independent of the operating device, and shall be designed to prevent or correct over-travel as well as under-travel of the car with respect to the landing sill level.

12.7 Generator Field Control and Motor Generator Set: Machine control shall be of the variable voltage type effected by means of a uniformly varying DC voltage applied to the elevator motor. A motor generator set shall be provided for the elevator. The variable voltage shall be obtained by varying the field strength of the DC generator. The motor generator set shall consist of a separately excited DC generator of proper characteristics and required horsepower for the hoisting motor, a driving motor suitable for the specified supply voltage, and an exciter. The unit shall be compact in design, with the armature of motor and generator mounted on a single forged steel shaft. Shaft shall be mounted on antifriction ball or roller bearings contained in a cage. The entire assembly shall be mounted on one rigid cast iron or structural steel bedplate with supporting feet and shall be statically and dynamically balanced. The unit shall be located in the machine room and isolated from the floor by suitable rubber vibration isolating pads. Suitable overload protection and means for compensation for voltage drop due to aging shall be provided. The set shall be designed for high efficiency especially when running at no load. The commutation must be sparkless when running at full load and no more than barely visible sparking during acceleration and retardation betweeen full and no load. It must run quietly and be practically free from vibration. The insulation of the set shall be Class A and the set shall be rated in accordance with the standards of the IEEE for 50 degree C temperature rise continuous duty. The synchronous speed of the set shall not exceed 1800 RPM. The voltage of the generator shall not exceed 400 volts. Direction of rotation shall be indicated by an arrow painted on the frame. All electric connections at motor generator set and hoisting motor shall be in suitable conduit securely fastened. Short self-supporting conductors from the

set to its controller may be extended from a bushed machine opening to its controller terminal. The set starter panel shall be similar to that of the elevator controller with wiring similarly installed. The starter shall be full magnetic type including the necessary accelerating switches, starting resistance, Wye-Delta switching and overcurrent protection. Suitable switches shall be provided to control the set from the machine room. The set control system shall be such that the pressing of a car or landing button will automatically start the set and it shall be equipped with an adjustable timing device which will automatically shut the set off at a predetermined time after the elevator has answered the last registered call. The adjustment time interval shall range from 20 to 90 seconds.

13. OPERATING PANELS AND POSITION INDICATORS:

13.1 General: Except as otherwise specified below, the face plates of car operating panels, landing pushbutton stations and position indicators shall be designed for flush mounting, shall be round edge stainless steel of approved design, and shall be not less than 1/8 inch thick. Face plates for landing position indicators for Elevators No. 1, 2, 4 and 5 shall be as detailed on Drawings. The car operating panels, landing pushbutton stations and position indicators shall be located at approved positions.

13.2 Pushbuttons: Pushbuttons in car operating panel and pushbutton stations shall be of heavy and substantial construction with contacts and wearing parts of materials and sizes to meet the severe requirements of elevator service. Buttons shall be so designed that a spring with take up the initial pressure from which contact is made and further pressing shall seat the button on or in the face plate. Landing call buttons and registered call signal indicators shall have their function indelibly and legibly identified by legend or arrow. When a landing call button is operated, the corresponding signal indicator in face plate shall be illuminated to indicate the call has been registered. Registered call signals shall consist of two signal indicators at intermediate landings and one indicator at each terminal landing; one for the up direction and one for the down direction. Signal indicator shall be extinguished when the car has served the registered call.

13.3 Car Operating Panel Stations: Each car shall be equipped with a car operating panel station provided with the required controls for the type of operation and the respective type of elevator specified under Paragraph entitled "Car Operation and Control".

13.4 Switches and Devices: Switches and devices on the car operating panel shall be of the highest grade. Each device and its operating positions shall be legibly and indelibly identified. The car dispatching buttons in all car operating panels for corresponding floors shall, where possible, be located in identical relative positions.

13.5 Car Position Indicator: A readout type electric position indicator shall be provided over each car operating panel. The indicator shall be arranged to show the floor position of the car in the hoistway. The floor

projection shall be directed to a round disc screen in the front return panels. As the car travels through the hoistway, its position shall be indicated by the illumination of the numeral corresponding to the landing at which the car is stopped or passing. Change of illumination shall be instantaneous shall be accomplished approximately midway between floors. Dry contacts shall be provided on each car position indicator circuit and connect to Field Interface Device (FID) terminal cabinet specified in Division 13.

13.6 Landing Position Indicators: A readout type hall position indicator, screen projection digital type, shall be provided at elevator at Level 1 only. The position of the car in the hoistway shall be shown by the illumination of the indication corresponding to the landing at which the car is stopped or passing. The floor projection shall be directed to a round disc screen in the valance. Attention shall be given to the alignment of the projection bulb to give maximum light intensity for each position. LED or vacuum type indicators are not permitted.

13.7 In-Car Lanterns: A visual signal shall be provided in each door jamb along with an audible signal indicating to the prospective passenger the car answering the call and the direction of travel. The audible signal shall sound once for the up direction and twice for the down direction.

13.8 Audible Signal (Elevators No. 1, 2, 4 and 5): An audible signal shall be provided in the car to sound when the car is stopping at or passing a floor served by the elevator.

14. HOISTWAY AND CAR EQUIPMENT:

14.1 Foundations and Overhead Beams: Machines located overhead shall be mounted on suitable I-beam or channel supports which shall be furnished and installed under this section. Templates and foundation bolts shall be furnished under this Section. Where tops of machine beams finish flush with concrete slab over hoistway, shelf angles shall be provided on machine beams to support the slab. All required forms, templates, and sleeves shall be furnished to insure that the openings in concrete slabs over the hoistways are of the proper size and location to suit the hoisting ropes and other equipment. Metal sleeves projecting 2 inches above the concrete slab shall be provided for all hoisting rope and governor rope openings. Thickness of sleeves shall be not less than No. 12 USS gauge and shall have inside of sleeves sloped in the same manner as the ropes.

14.2 Guide Rails and Fastenings: Guide rails for car and counterweight shall be accurately machined, standard "T" section guide rails with tongue and groove joints. The weight shall comply with ANSI A17.1 requirements. Substantial machined fish plates shall be used to form the rail joints. The guide rails shall be plumb within 1/8-inch of vertical and erected in a strong and substantial manner. Guide rails shall be securely fastened to brackets or other supports by approved heavy rail clamps. Guide rails shall be strongly and properly supported and placed so as not to become distorted by eccentric loading or by application of safety devices. All shimming required shall be

of metal securely held in place. Fish plates shall be located so as not to interfere with supporting clamps and brackets. Each fish plate bolt shall be fitted with a split spring steel lockwasher. Brackets or other supports shall be fastened to building steel by through-bolting or welding. All necessary guide rail backing or additional supports shall be provided as required to prevent guide rail deflection and stresses exceeding the limits prescribed by the ANSI Safety Code A17.1. When concrete beams or concrete walls or masonry are used for the support of guide rail brackets, fastenings shall be made to suitable cast-in inserts or by means of anchor bolts of the proper type and size. Inserts or anchor bolts shall be used only where steel framing is not available for the support of guide rail brackets. The inserts and all information relative to their location and placement shall be furnished. Anchor bolts, when used in lieu of inserts, shall be of the self-drilling tubular, externally slit steel expansion shell with single cone expander. The anchor shall develop the strength of the bolt after installation. Anchors shall be flush mounted. Guide rails shall be suitably bottomed in the pit floor and shall extend to the underside of the overhead machine room floor. The anchoring of the guide rails at the pit floor must avoid puncturing the waterproofing. When the building is completed, the guide rails shall be checked for alignment and shall be realigned where the alignment has been disturbed. Guide rails shall be clean, free from dust, and any signs of abrasion prior to acceptance.

14.3 Buffers and Pit Switch: Traction elevator buffers with suitable blocking and supports shall be provided under the car and counter-weight. The type of buffer used shall have been properly tested and approved as complying with the service requirements. Pipe struts and steadiers shall be provided as required by the pit conditions.

14.3.1 Oil Buffers: Oil buffers shall be provided. They shall have adequate stroke and be designed so that they will bring the fully loaded car and counterweight to rest from governor tripping speed at an average rate of retardation not exceeding gravity. The moving portion of the buffer shall be so designed that it can be accelerated by the car without a noticeable peak retardation. Oil buffers shall be of the spring return type, except that counterweight buffers attached to the counterweight may be of the gravity return type. Means shall be provided for checking the oil level.

14.3.2 Pit Switch: A pit switch accessible from the bottom terminal opening or from the pit access opening, shall be provided in the pit, arranged to interrupt the power supply to elevator motor and to apply the brake independently of the regular operating device to permit safe access to the pit. Location of pit switch and light switch for pit shall be above ladder which is required by ANSI A17.1. Light shall be located 6 feet above pit floor.

14.4 Counterweight: Each elevator shall be suitably counterbalanced for smooth and economical operation. Cast iron weights, held in place by at least two substantial adjustable tie rods, shall be contained in a structural steel frame properly guided with guide shoes at top and bottom of counterweight.

The weights shall be prevented from shifting within the frame flanges by means of suitable fillers on the car side so as to maintain the required running clearances. The counterweight shall be equal to the weight of complete elevator car plus the approximately 40 percent of the rated load.

14.4.1 Counterweight Screen: A counterweight screen of substantial metal construction, a least six feet high, shall be provided at the bottom of the hoistway as a protective guard except where the type of hoisting rope compensation prevents its installation.

14.4.2 Weight of Counterweight: Weight of counterweight shall be checked by placing the proper load in the car and using either the electrical motor overhaul method or the manual release of brake method.

14.5 Automatic Terminal Stops:

14.5.1 Upper and lower normal terminal stopping devices shall be provided in the hoistway, and shall be arranged to automatically stop the car and counterweight from any speed attained in normal operation within the top and bottom overtravels, independently of the operating device, final terminal stopping devices and the buffers.

14.5.2 Final terminal stopping devices shall be provided for the elevators and shall be arranged to automatically stop the car and counterweight within the top clearance and bottom overtravel independently of the operation of the normal terminal stopping devices, but with the buffers operative. The final terminal stopping devices, when operated, shall prevent further normal operation.

14.6 Hoistway Door Interlocks and Car Door Contact: Each hoistway entrance shall be equipped with an approved type interlock. An electrical interlocking device separate from mechanical interlock will not be approved. The interlock shall prevent operation of the car until the hoistway doors are locked in the closed position as defined by ANSI A17.1 and shall prevent opening the doors at any landing from the landing side (except by special key) unless the car is at rest at that landing, or is in the leveling zone and stopping at the landing. No accidental ground in the electric circuit shall prevent the operation of the interlocks as hereinbefore described. The interlocks shall be so located as to have a ready, unobstructed access for periodic maintenance, inspection and repairs. The car doors shall be equipped with a car door contact which will prevent operation of the car unless the doors are closed.

14.7 Car Safety and Governor: A mechanical safety shall be mounted under the car platform of each traction elevator and securely bolted to the frame to provide safe and reliable operation. The safety operating mechanism on the left and right sides of the car frame shall be mechanically interconnected so that operation of the mechanism on one side will cause the simultaneous operation of the mechanism on the other side. The safety shall be actuated by a centrifugal governor mounted in the overhead and connected to

the safety tripping mechanism by continuous governor roping attached to the car frame and passing over the governor sheave and a weighted tension sheave in the pit. The operation of the governor on overspeed shall open a switch disconnecting the power from the elevator motor and brake and then trip the safety mechanism. The safety mechanism when tripped shall engage the rails with sufficient force to stop and hold the car from governor tripping speed with full load in the car, with an average rate of retardation and within the distance required by ANSI A17.1. The car mechanical safety shall be provided with a switch operated by the safety mechanism when the safety is applied. Operation of the switch shall open the driving motor circuit and shall apply the machine brake before or at the time of safety application.

14.8 Guide Shoes: Guide shoes shall be provided in adjustable mountings on each side of car and counterweight. They shall be rigidly secured in accurate alignment at the top and bottom of the car and counterweight frames. The guide shoes shall run on dry unlubricated guide rails. The car and counterweight shall each be properly balanced to equalize the pressure of the guide rails upon the rollers of the guide shoes. When oil type buffers are attached to the bottom of the counterweight an additional guide shoe shall be provided on each side of the buffer frame. Roller guide shoes shall be provided.

14.8.1 Roller Type Guide Shoes: Each type guide shoe shall be of an approved type consisting of rollers assembled on a substantial metal base and designed and mounted so as to provide continuous contact of all rollers with the corresponding guide rail surfaces under all conditions of load and operation. The rollers shall run on the three finished guide rail surfaces. Each roller shall be tired with a durable resilient oil-resistant material and shall rotate on precision grade ball bearings. Ball bearings shall be provided with lubricant seals and means for lubrication. The maximum speed of rotation for rollers shall not exceed 1000 rpm for counterweight guide rollers and 500 rpm for car guide rollers. The roller guide shoes shall operate quietly under all conditions of load and operation.

14.9 Hoisting and Governor Ropes: Hoisting and governor ropes shall be designed for elevator service, shall be of flexible construction traction steel with lubricated fiber core, and shall be of size and number to insure adequate strength and wearing qualities. Ropes shall be free of kinks and displaced or broken wires. Means shall be provided for suspending the elevator car frame from the overhead beams when replacing ropes. Sheet metal and angle iron guards shall be provided at openings in the machine room floor and as required to protect personnel from accidental contact with the ropes.

14.9.1 Hoisting Ropes: Hoisting ropes shall be of the 8 by 19 construction. The end of each rope at the car, at the counterweight, and at the stationary hitch ends for two to one roping, shall be fastened in a tapered babbitted rope socket forming the end portion of a unit construction forged steel shackle rod designed to permit adjustment of the rope length. Each shackle rod shall be provided with a compression spring designed to equalize the tension in the group of hoisting ropes.

14.9.2 Governor Ropes: Governor ropes shall be of the 8-strand, 19 or 23 wire-to-the-strand construction.

14.10 Wiring: Wiring shall be provided in the hoistway and machine room, and shall be adequate for the proper operation of the equipment. Wire and cable for light, power, and signal circuits in the elevator machine room and hoistway shall conform to elevator cable specified in the National Electrical Code for the type of location specified. The minimum size of conductors (exclusive of those which form an integral part of control devices) shall be No. 14 for lighting circuits and No. 18 for operating, control and signal circuits, except that for lighting conductors in traveling cables, No. 16 conductors may be used in parallel to provide a current carrying capacity equivalent to not less than No. 14 size. In no case shall the maximum current carried exceed that specified by the National Electrical Code for the type of conductor used. Unless otherwise specified herein, all wiring between the various items of elevator equipment and external wiring, and wiring methods shall conform to the National Electrical Code.

14.10.1 Conduit: Wiring shall be in zinc coated rigid steel conduit, electrical metallic tubing, aluminum conduit, or metallic raceways with metal outlet boxes, except for traveling cables. Flexible conduit may be used for the short connections not subject to moisture, oil, or embedment in concrete. Fittings shall be of the threadless type. Runs in the elevator hoistway or in the floors shall be made in a manner to minimize transmission of vibration or noise to the building.

14.10.2 Working Light Circuit: Working light circuit for lampholder outlets, including porcelain medium base lampholders fitted with wire lamp guards, shall be provided on car crosshead and under the car platform. In addition, a duplex plug receptacle shall be provided on top of the car. The car light switch on the car panel shall also control the lamps and plug receptacle on the exterior of the car.

14.10.3 Traveling Cables: Traveling cables shall be Type E, designed for elevator service in accordance with the National Electrical Code, and shall be sufficiently flexible to readily adapt to all changes in the position of the elevator car and hang straight without twist. The cables shall be capable of bending 360 degrees with an inside radius of one foot without any permanent set and without cracking of the outer covering. The open loops shall show no tendency to twist upon itself. Traveling cables exceeding 100 feet in length shall be provided with steel strands. Traveling cables 100 feet or less in length shall have non-metallic fillers and shall be suspended by looping cable around supports. The traveling cables shall terminate in a terminal box located on the bottom of the platform. The terminal boxes shall have approved connection strips for connecting conductors and approved strain devices for connecting the steel supporting strands and relieving the conductors of the traveling cables of all strain. The swing of the trail cables shall be checked when the elevator is running and all shields and pads necessary to prevent chafing shall be installed. The loop in the traveling cables shall be not less than two feet unless otherwise approved. The

traveling cables and corresponding groups of conductors connecting these cables to the control, signal, and car operating panels, shall each contain at least 10 percent spare conductors, but not less than 2 spare conductors of the same size and type. Each traveling cable conductor shall have a distinctive color coded outer covering for identification. Terminal blocks shall have indelible identification numbers for each terminal connection.

14.10.4 Hoistway Access Switches: Hoistway access switch shall be provided in conformance with ANSI A17.1.

14.10.5 Top of Car Operating Device: The elevator shall be provided with an operating device, mounted on or from the car crosshead, which will permit slow speed car operation not to exceed 150 feet per minute for purposes of adjustment, maintenance and repair. The device shall comply with the requirements of ANSI A17.1. A transfer switch shall be provided in the top-of-car operating device fixture which will disconnect the hoistway access switch or switches and render the top-of-car operating device operative. The device shall include an emergency stop switch but will not require additional means for operation of power door operators or automatic car leveling devices. A safety shall be provided so that operation of "Up" or "Down" buttons will only occur when safety is held in. The device shall be mounted in a metal box and shall be rigidly secured in a position readily accessible to the workmen on top of the car. Operating buttons and control handles shall be shrouded or otherwise protected in an approved manner to preclude accidental movement.

"14.10.6x Telephone Circuit: Provide a telephone circuit from each elevator car to the nearest telephone satellite closet and label each circuit as to "elevator number" and "for telephone use." Refer to Communication Systems drawings for location of telephone satellite closets."

14.11 Car and Hoistway Door Accessories for Side Sliding Doors:

14.11.1 Power Operators: Power operators shall be automatic electric operators designed to operate the car and hoistway doors simultaneously. The doors shall be two feet per second opening and one foot per second closing. Doors shall operate smoothly without vibration, slam, or shock. The electric operator shall open the car and the hoistway doors at the landing where the car has stopped or is in the leveling zone and shall close the doors before the car can leave the landing as specified in paragraph entitled "Car Operation and Control". The door operator shall permit the doors to be opened readily by hand from within the car, when the electric power fails or is interrupted. An automatic spring closer shall be provided for each hoistway door.

14.11.2 Safety Edge: A safety edge or door protective device shall be provided on the front edge of each leading car door panel and shall extend the full height of and project beyond the front edge of door panel. When the doors are open, the safety edge may project into the opening. The safety edge shall be arranged so that, should it touch a person or any obstruction in its path, while the doors are closing, it shall automatically cause both the car

and the hoistway doors to return to the open position. Front edge of safety edge shall lead the front edge of hoistway doors in closing by at least 1-1/2 inches.

14.11.3 Light Ray Device: A light ray safety device shall be provided in car to project at least two rays at approved heights across the car entrance in the space between the car and the hoistway doors. The interruption of either ray by a person or object shall prevent the doors from closing, and if the doors are in the process of closing, shall cause the doors to reopen. Doors shall close a short time interval after the light rays are reestablished. The design of the device shall include means that will make it inoperative after a prolonged interruption of either ray beyond a predetermined interval, or the duration of operation of the device itself may be limited to that interval. In either case, at the end of the predetermined interval the doors shall begin to close in the normal manner. If the safety edge is contacted during closing, it shall cause the car and hoistway doors to return to the open position as specified under the paragraph entitled "Safety Edge". A switch shall be provided in the service cabinet which will permit by-passing the light ray circuit when required.

15. CAR FRAME, PLATFORM, AND ENCLOSURE:

15.1 Car Frame: The car frame shall consist of steel channels and angles securely riveted, welded, or bolted, and substantially reinforced and braced.

15.2 Car Platform: The platform shall consist of rigid structural steel frame members of ample size properly reinforced with intermediate steel stringers. The platform shall be built entirely. The underside of the platform shall be covered with sheet steel not less than 0.0179-inch thick with the exposed edge joint folded. The platform shall be supported in level position from the uprights by means of four adjustable tie rods. The platform shall be equipped with a fluted metal threshold plate of approved finish with grooves for door guides for sliding doors. The platform shall be provided on the car entrance side with a fascia extending beyond the underside of platform to act as a toe guard for a vertical distance equal to at least the length of the leveling zone plus 3 inches. The platform shall be effectively sound isolated from the car frame by means of rubber pads at least one inch thick or equivalent material.

15.2.1 Platform Floor (Elevators No. 1 and 2): Platform floor shall be recessed to receive carpet specified in section entitled "Carpet".

15.2.2 Platform Floor (Elevators No. 4, 5, 7 and 8): Platform floor shall be finished with inlaid sheet vinyl flooring material as specified in section entitled "Seamless Flooring".

15.2.3 One-Piece Loads: The platform shall be arranged to accommodate one-piece loads, such as wheeled food carts, stretchers and x-ray equipment, weighing up to 1,100 pounds.

15.3 Passenger Cars: Passenger cars shall be of the sanitary design type.

15.3.1 Elevators No. 1, 2, 4 and 5: Cars shall consist of 16 gage furniture steel shell panels, 96 inches high, arranged for the application of interior panels; 14 gage Type 302 stainless steel return panel, 84 inches high, including integral column and arranged with suitable cutout for car operating fixture; 14 gage Type 302 stainless steel fascia, full width of car; and 14 gage furniture steel car top with matte white painted finish. Car top shall be reinforced to withstand the weight of 300 pounds on any two-foot square area. Vertical panels shall be 5/8 inch thick particle board, faced with architectural tambour, prefinished, fire-rated white oak on flexible backing as specified in section entitled "Architectural Woodwork".

Adequate reinforcement, secured by welding, shall be provided at all cutouts. Recessed base shall be 4 inches high, with baked enamel finish. Suspended ceiling shall be faced with bronze mirror finish and shall include six down lights. Interior metal surfaces, except stainless steel, bronze and aluminum, shall be given a baked enamel finish consisting of not less than three coats of primer and surfacing material of three finish coats of enamel. Each coat shall be evenly applied in sufficient quantity to completely hide the preceding coat, baked at proper temperature, and rubbed smooth. The final coat shall be rubbed to an eggshell waterproof finish. Elevators No. 1, 2, 4 and 5 shall have Type 302 stainless steel handrails, 1/4 inch by 8 inches, on walls without doors. All stainless steel shall have satin finish.

15.3.2 Elevators No. 7 and 8: Cars shall consist of 14 gage furniture steel shell panels, 96 inches high, with baked enamel finish; 14 gage Type 302 stainless steel return panel, 84 inches high, including integral column and arranged with suitable cutout for car operating fixture; 14 gage Type 302 stainless steel fascia, full width of car; and 14 gage furniture steel car top with matte white painted finish. Car top shall be reinforced to withstand a weight of 300 pounds on any two-foot square area.

Adequate reinforcement, secured by welding, shall be provided at all cutouts. Applied base shall be 4 inches high, finished with baked enamel. Suspended ceiling shall consist of an extruded aluminum frame with baked enamel finish and top set 1/2 inch x 1/2 inch x 1/2 inch metal eggcrate diffusers, painted white. Lighting fixtures shall be fluorescent type. Interior metal surfaces, except stainless steel, bronze and aluminum, shall be given a baked enamel finish consisting of not less than three coats of primer and surfacing material of three finish coats of enamel. Each coat shall be evenly applied in sufficient quantity to completely hide the preceding coat, baked at proper temperature, and rubbed smooth. The final coat shall be rubbed to an eggshell waterproof finish. Type 302 stainless steel handrails, 1/4 inch by 8 inches, shall be provided on walls without doors. All stainless steel shall have satin finish.

15.3.3 Entrances: Car doors shall be 1-1/4 inches thick, with 16 gage Type 302 stainless steel facing with satin finish. The height and width of

opening provided shall be not less than that provided by the hoistway doors. Car doors shall be equipped with safety edge. Car doors shall be supported at top with heavy duty hangers, with not less than two ball bearing sheaves for each hanger. Hangers shall be designed for as nearly noiseless operation as possible. Bottom of door shall be guided by non-metallic gibs sliding in a machined groove in sills with at least two gibs to the door panel. Gibs shall be replaceable without removing door from hanger rail.

15.3.4 Emergency Car Lighting: Elevators shall have the car equipped with an emergency car lighting system consisting of a battery, lamp, and controlling relay so arranged that it will automatically provide emergency lighting in the car in the event of power failure in the normal car lighting circuit. The battery and relay shall be housed in a sheet steel box, with hinged cover and latch, mounted on top of the elevator car. The arrangement shall permit ready access for inspection, maintenance and replacement of batteries. A card holder with 3 by 5 inch card for recording dates of service shall be provided on the outside of the box. The following legend "Check condition of battery every 12 months and replace if necessary" shall be conspicuously printed on the box. The light fixture shall be mounted on the exterior of the car with the lens or sealed beam unit protruding through ceiling into a beveled opening near the front of car over the operating panel approximately 7 feet above the floor.

15.3.4.1 Battery: The battery shall be a 6 or 12 volt, sealed, leak-proof, dry-cell, trickle type self-recharging model with screw-type terminals and insulated fasteners connected to a plug-in receptacle on top of car. The battery shall have a capacity rating sufficient to light the bulb or sealed beam unit for not less than two hours.

15.3.4.2 Relay: The relay for connecting the emergency light to the battery power supply shall be of the normally closed type designed for continuous service with the relay coil operated by the normal lighting power supply. The relay contacts for the battery supply shall be of the low-resistance wiping type.

15.3.4.3 Light Fixture: The emergency car light fixture shall consist of either a reflector and a proper voltage lamp mounted in a housing with the clear lens protruding into the car, or a proper voltage sealed beam unit. The unit shall provide adequate illumination to permit dialing the telephone or operating the various components on the elevator panel. The fixture shall be accessible from the top or interior of the car to permit replacement of lamp or cleaning reflector. The lamp shall be rated not less than 12 nor more than 25 watts.

15.3.5 Ventilation: Ventilation shall consist of a two-speed motor-driven propeller-type exhaust fan located at the top of the cab above a neat appearing grille and inlet vent slots in the wainscot not more than 12 inches above the base as indicated. A switch shall be provided on the car panel to control the fan.

15.3.6 Pads and Hooks (Elevators No. 4 and 5): Stainless steel pad hooks shall be provided and shall be placed at correct height for pads. One complete set of protective pads shall be provided for each elevator.

15.4 Emergency Exit: An emergency exit shall be provided in top of the car. The exit shall, in addition to ANSI Safety Code requirements, be hinged, shall be unobstructive when open, shall have a mechanical stop other than chain stop, shall be located at front of car, shall extend through the width of car and shall be arranged to open from inside as well as outside of car without use of tools. The exit shall be equipped with a contact which shall prevent operation of the car unless the exit panel is fully closed. A guard rail shall be provided on top of car on counterweight side.

15.5 Access Panels: Access panels shall be provided in the car sides as may be required for access to equipment, etc., which is not readily accessible from the car top or pit. Panels shall be neatly fitted and be provided with suitable lock. If governor is located in the overhead of the hoistway, safety release access shall be provided at the proper location.

16. HOISTWAY DOORS AND ENTRANCES:

16.1 General: Door and entrance assembly shall be provided at each hoistway entrance. They shall be for horizontally sliding doors. All work shall be set from centerline of aligned car guide rails and shall be in perfect alignment with elevator car opening and car platform. Before the parts are assembled all steel surfaces shall be thoroughly cleaned of all rust, oil, grease, and dirt, by benzine wash, or otherwise, and shall then immediately be given a coat of approved rust-inhibiting paint. Surfaces which will be concealed shall be cleaned and coated prior to assembly or installation.

16.2 Assemblies for Horizontally Sliding Doors: Horizontally sliding doors shall be power operated and shall be two-speed, side opening. Hoistway entrance door assemblies shall be complete including frames, doors, sill, fascia plates, hardware, struts, and accessories necessary for proper operation.

16.2.1 Hoistway Entrance Unit Frames: The entrance unit frames shall be fabricated of 14 gage stainless steel, and shall be formed to the design shown on the approved drawings. The component members constituting the unit frame shall include header, struts, and frame of door opening. The header shall be of sufficient size and thickness to provide support for the frame and hangers. The strut angles shall be of sufficient size to support the entrance and shall be secured to the sill and hoistway construction. The frames on hoistway side shall be carried far enough back to present a neat appearance and shall be secured to sill and header. Frame miters shall be neatly welded and ground smooth and even.

16.2.2 Hoistway Entrance Sills: Hoistway entrance sills shall be fluted tread with approved non-slip wearing surface. They shall be one-piece

extrusion of sufficient length to suit the spacing of the two supporting struts. Grooves for the door guides shall be at least 1/2-inch wide. The sills shall be securely fastened to the floor beams by means of 3/16-inch thick formed steel brackets, or equal, suitably spaced. Material for sills shall be extruded aluminum. Sills shall be of the narrow type.

16.2.3 Doors: Hoistway entrance doors shall be of hollow metal construction with flush surfaces on car and landing sides. Doors shall be of .0598-inch nominal thickness sheet steel reinforced by formed vertical steel sections, running full height of door and spaced not over 9 inches apart designed to fasten front and rear plates together securely and shall be completely filled with cellular asbestos or approved equal construction. Each door panel shall be reinforced for mounting of interlock and door operator accessories. Bottom of doors shall be guided by non-metallic gibs sliding in a machined groove in sills with at least two gibs to each door panel. Gibs shall be replaceable without removing doors from hanger rails. Hoistway doors shall be constructed in accordance with the requirements of A17.1. Sight guards shall be furnished on the leading edge of the doors to conceal the hoistway beyond the doors.

16.2.4 Hoistway Entrance Door Hangers: Each hoistway door shall be supported at top with heavy-duty hangers equipped with ball bearing sheaves. Hangers shall operate quietly on the tracks. Each hanger shall be designed for an upward thrust against the underside of the track by a ball bearing roller on an adjustable eccentric stud. The tracks and track supports shall be fastened to the header plate.

16.2.5 Hoistway Entrance Door Hanger Covers: Hoistway entrance door hanger covers shall be made of 0.0747-inch nominal thickness sheet steel and shall be constructed to permit ready access for servicing hangers. The covers shall be removable panels or top hinged and shall be equipped with means to hold them securely in the closed position.

16.2.6 Hoistway Entrance Fascia Plates: Hoistway entrance fascia plates shall be made of not less than 0.0747-inch nominal thickness sheet steel and shall extend from top of hanger to sill above. Fascia plates shall be properly reinforced. All necessary supports required to secure fascia plates in place shall be provided. Short fascia plates beveled at 60 to 75 degrees to horizontal shall be provided at the upper and lower terminal landings.

16.2.7 Hoistway Entrance Door Finish: The doors shall be finished baked enamel of approved color and in the manner specified hereinbefore for passenger car panels.

17. FIELD INSPECTION AND TESTS:

17.1 General: When the elevator work included in the contract is fully completed, the contractor shall demonstrate to the satisfaction of the Contracting Officer the proper operation of every part of the equipment and compliance thereof with contract requirements, including compliance with all

applicable requirements of the ANSI Safety Code A17.1. A certified Government elevator inspector from LANTDIV shall be present at all final inspections and testing. A 14 day notice is required. The inspection procedure outlined in Practice for the Inspection of Elevators, Inspectors, Manual, ANSI A17.2 shall form a part of the final inspection.

17.2 Test Instruments: The contractor shall furnish all test instruments and materials required for final inspection, to determine compliance of the work with the contract requirements. Materials and instruments furnished shall include standard 50-pound test weights, "Megger", alternating-current voltmeter and ammeter, direct-current voltmeter and ammeter, centigrade calibrated thermometers, spirit level, stop watch, and a direct reading tachometer.

17.3 Generator and Motor Tests: Shop tests and certified test sheets for elevator motors and motor generators are not required. The heating, insulation resistance, etc., of the motors will be determined under actual conditions after installation.

17.4 Final Inspection: The following tests shall be made at the time of final inspection.

17.4.1 Full-Load Run Test: The elevator shall be subjected to a test for a period of one hour continuous run, with full specified rated load in the car. During the test run, the car shall be stopped at all floors in both directions of travel for a standing period of 10 seconds per floor.

17.4.2 Speed Test: The actual speed of the elevator car shall be determined in both directions of travel with full contract load and with no load in the elevator car. Speed tests shall be made before the full-load run test and also after the full-load run test. Speed shall be determined by applying a tachometer to the car hoisting cables. The actual measured speed of elevator car with full load in the UP direction shall be within 5 percent of rated speed. The maximum difference in actual measured speeds obtained under the various conditions outlined shall not exceed 10 percent of rated speed.

17.4.3 Temperature Rise Test: The temperature rise of the hoisting motor and motor generator shall be determined during the full-load test run. Temperatures shall be measured by the use of thermometers inserted into the various windings, etc., and shielded by cotton waste. Under these conditions the temperature rise of the equipment shall not exceed 50 degrees C above ambient temperature. Test shall be started only when all parts of equipment are within 5 degrees C of the ambient temperature at time of starting test.

17.4.4 Car Leveling Test: Elevator car leveling devices shall be tested for accuracy of landing at all floors with no load in car, balanced load in car, and with full load in car, in both directions of travel. Accuracy of floor landing shall be determined both before and after the full-load run test.

17.4.5 Insulation Resistance Test: The complete wiring systems of the elevator shall be free from short circuits and grounds, and the insulation resistance of systems shall be determined by use of a "Megger". The systems shall have an insulation resistance of not less than one megohm.

17.4.6 Oil Buffer Tests: Oil buffers for car and counterweight shall be tested as outlined in Rule 900.3 of ANSI A17.1.

17.5 Car Safety Drop Test: In addition to the tests specified in ANSI Safety Code Rule 900.2, the contractor shall, before completion of the contract, make a drop test at the building of each type of sliding car safety installed under the contract, unless prior to such time he has submitted to the Contracting Officer the certification of an approved testing laboratory certifying that the safety has been subjected to a type drop test and has met the following test requirements.

17.5.1 Certified Test: The type drop test shall have been made with the maximum load for which the safety is rated, and the governor tripping speed shall have been set and adjusted to correspond to the maximum rated speed for which the safety is rated. The ratio between the sliding distance for the safety, as indicated by the markings on the rail, and the total distance from rest to rest shall be not less than 0.30 nor more than 0.40 and not more than 0.75 for flexible jaw safeties. The submitted certificate for drop type test shall list the following data:

(1) Manufacturer's name.
(2) Safety identification number.
(3) Governor identification number.
(4) Maximum rated load for safety.
(5) Maximum rated speed for safety.
(6) Ratio of distance from rest to rest and sliding distance.

17.5.2 Site Tests: In the event the contractor elects to make the drop tests at the building, in lieu of submitting certified type drop test certificates, he shall make a drop test of each type of sliding car safety installed as specified for type drop tests, except that they shall be made with a total load on the safety corresponding to actual contract conditions with the governor set to correspond with rated car speed, in which case the inertia of the governor rope and rigging may apply the safety independent of the governor at a lower speed than at which the governor will trip because of overspeed, and apply the safety. In every case where the safety is applied by inertia, a separate test of governor shall be made of actual tripping speed without safety application.

17.5.3 Drop Tests: Drop tests at the building shall be made by the contractor in the presence of a representative of the Contracting Officer. The Contractor shall furnish the Contracting Officer a test record showing that drop test has been satisfactorily performed. Test record shall include the following data:

(1) Manufacturer's name.
(2) Safety identification number.
(3) Governor identification number.
(4) Test load on safety.
(5) Rated elevator car speed.
(6) Ratio of distance from rest to rest and sliding distance.

---END---

SECTION 14220. HYDRAULIC PASSENGER ELEVATORS

1. APPLICABLE PUBLICATIONS: The following publications of the issues listed below, but referred to thereafter by basic designation only, form a part of this specification to the extent indicated by references thereto:

1.1 American National Standards Institute (ANSI) Publications:

A 17.1-1978	Elevators, Dumbwaiters, Escalators, and Moving Walks, Safety Code for.
A 17.2-1973	Elevators, Escalators and Moving Walks, Practice for the Inspection of.

1.2 National Electrical Manufacturer's Association (NEMA) Publications:

MG 1-1976	Motors and Generators Specifications.

1.3 National Fire Protection Association (NFPA) Publications:

70-78	National Electrical Code.

2. QUALITY CONTROL: Approvals, except those required for field installations, field applications, and field tests shall be obtained before delivery of materials or equipment to the project site.

2.1 Elevator Construction Experience and Certification: Prior to award, the low bidder shall submit data for the approval of the Contracting Officer which will show that he has successfully built and installed elevators of the same type and of the same control features as specified herein, or that he has a firm contractual agreement with a subcontractor having such required experience. The data shall include the name and locations of at least two installations where the low bidder, or the subcontractor referred to above, has installed such elevators. The low bidder shall indicate the type, size, rise, speed, load, and the control features employed at these installations and certify that these elevators have performed satisfactorily in the manner intended for a period of not less than 18 months.

2.2 Elevator Manufacturer: The elevator manufacturer shall be regularly engaged in the business of manufacturing, installing, and servicing elevators of the type and character required by these specifications. All hydraulic passenger elevators specified herein and all electric elevators specified under section entitled "Electric Elevators" shall be furnished by the same manufacturer. The hydraulic passenger elevator manufacturer shall be the manufacturer of the pumping plant, plunger and cylinder, controller, signal system, and of all the mechanism constituting the various electrical and mechanical safety devices. The elevator manufacturer shall have an established service office, at the time of bidding, located within 50 miles of the job site. This office shall be staffed with sufficient personnel and stocked with spare parts to render prompt and efficient maintenance service.

3. SUBMITTALS:

3.1 Shop Drawings: Shop drawings shall be submitted to and approved by the Contracting Officer. They shall contain enough detailed information to determine that the equipment conforms to the requirements of this specification.

3.1.1 They shall contain not less than the following information:

a. Location of machinery and controls in machine room.

b. Shop drawings and/or catalog cuts for all contractor-furnished items and equipment, including but not limited to doors, frames, car enclosure, car frame, switchboards, motors, pumps, guide rails and brackets, a complete layout of the hoistway in plan and elevation and all other layout information and clearance dimensions required by ANSI A17.1.

c. Complete information on motor, pump, gauges, tanks, piping and valves, control system and buffers.

3.2 Certified Laboratory Test Reports: Before delivery of materials, certified copies, in triplicate, of the reports of all tests required in referenced publications shall be submitted to and approved by the Contracting Officer. The testing shall have been performed by a Government approved independent laboratory, within one year of submittal of reports for approval. Test reports on a previously tested material shall be accompanied by certificates from the manufacturer certifying that the previously tested material is of the same type quality, manufacture, and make as that proposed for this project.

3.3 Operation and Maintenance Instructions: Three complete sets of neatly and substantially bound operating and maintenance instructions shall be furnished to the Contracting Officer. Operating portion shall be bound separately from maintenance portion. Operating instructions shall include detailed information relative to type, method, and sequence of controls, and operation with sufficient illustrations to prevent misinterpretation. Maintenance instructions shall include complete detailed data sufficient for adequately servicing the complete system, repairing, and ordering of all replacement parts, and shall be fully illustrated for clarity. Any components or methods peculiar to a particular system shall be included in detail.

3.4 Wiring Diagrams: Complete wiring and single line diagrams showing the electrical connections, functions, and sequence of operation of all apparatus connected with the elevators, both in the machine room and in the hoistway, shall be furnished in duplicate. One set shall be plastic or glass covered, framed and mounted in the elevator machine room. The other set shall be delivered to the Contracting Officer.

3.5 Lubrication Chart: One plastic or glass covered and framed lubrication chart shall be furnished and mounted as directed in the elevator

machine room. Chart shall identify lubricants as well as lubrication points and required frequency of application.

4. GENERAL: The completed elevator installation shall conform to ANSI A 17.1 and A 17.2 except as specifically indicated or specified.

4.1 Elevator Description:

4.1.1 Elevators No. 9 and No. 13: The car shall operate at 125 feet per minute, have a capacity of 4,000 pounds, automatically powered car doors and hoistway doors, a length of travel as indicated, and serve two landings with one entrance at each landing. The car platform shall be of size indicated. Door opening shall be 4'-0" wide by 7'-0" high. Car and hoistway doors shall be two-speed sliding type.

4.1.2 Elevators No. 10, 11, 12, 14 and 15: The car shall operate at 125 feet per minute, have a capacity of 2,500 pounds, automatically powered car doors and hoistway doors, a length of travel as indicated, and serve two landings with one entrance at each landing. The car platform shall be of size indicated. Door opening shall be 3'-6" wide by 7'-0" high. Car and hoistway doors shall be single horizontal sliding type.

4.1.3 Elevator No. 16: The car shall operate at 125 feet per minute, have a capacity of 4,000 pounds, automatically powered car doors and hoistway doors, a length of travel as indicated, and serve two landings with one entrance at first landing and front and rear entrances at top landing. Car and hoistway doors shall be two-speed sliding type.

4.2 Performance:

a. Speed: +10 percent full load up and no load down. Full load down shall not exceed 125 percent of rated speed shown on the cross head data plate.

b. Capacity: Safely lower, stop and hold 125 percent rated load.

4.3 Regular Maintenance Service: Regular Maintenance service on the elevator shall be provided for a period of 12 months after the date of acceptance by the Government. Normally, this work shall be done during regular working hours, however, the service shall include 24-hour emergency call-back service during this period without additional cost to the Government. The maintenance service shall include regular weekly examinations of the installation by competent and trained personnel and shall include all necessary adjustments, greasing, oiling, equipment cleaning, and supplies and parts to keep the equipment in good operable condition. Repair of damage as result of misuse, accidents, or negligence is excluded from maintenance service agreement requirements.

4.4 Requirements: The installation, including equipment, material, workmanship, design, and tests shall be in accordance with the standard rules

and specifications referenced. The equipment shall be safe in operation, and shall be of durable design and construction, and shall be the product of a manufacturer regularly engaged in the manufacture and installation of this type of equipment. The design and construction of the equipment and parts subject to wear shall be such that similar machines and devices will be completely interchangeable, and all working parts will be accessible for inspection, servicing, and repair. Adequate means shall be provided for the lubrication of all wearing parts that require lubrication.

4.5 Spare Parts: Spare parts required for the ordinary maintenance of the elevators, including a complete set of fuses and metal or carbon contacts for all control equipment, shall be provided. The spare parts shall be placed in a cabinet, approximately 18 inches by 18 inches by 36 inches, provided by the Contractor, with doors equipped with a lock and two keys. The cabinet shall be mounted in the machinery room as directed.

"4.6x Handicapped Markings: Special markings shall be provided for car buttons, car controls, and hoistway door jambs meeting the minimum requirements of National Elevator Industry, Inc.'s "Suggested minimum Passenger Elevator Requirements for the Handicapped" dated July 1976 and revised May 1977."

5. CAR OPERATION AND CONTROL.

5.1 Emergency Stop Switch and Alarm Button: An emergency stop switch and alarm button shall be provided in the car operating panel. Operation of the stop switch shall interrupt the power supply and stop the elevator travel independently of the regular operating device. The emergency stop switch and emergency alarm button shall be connected to one alarm bell to serve as emergency signal. The alarm bell, including conduit and wiring, shall be located in the hoistway. Provide a set of dry contacts on each emergency alarm button and circuit in traveling cable from each car to their respective machine room and connect to Field Interface Device (FID) terminal cabinet specified in Division 13.

5.2 Two-Stop Selective Collective Automatic Operation (Elevators No. 10, 11, 12, 13 and 14): Provision shall be made for the operation of the elevator "without Attendant". The operating device at the hoistway landings shall consist of single riser having a single pushbutton. Each landing pushbutton shall be equipped with a call register light.

5.2.1 The system shall be designed so that the operation of the elevator shall be from the pushbuttons at the landings and the car buttons marked for the corresponding landings. Pressure on a car button or landing button shall dispatch or call the car to the desired landing provided the interlock circuits have been established. If, while the car is making an upward trip, a lower floor landing button is pressed, the call shall be registered but shall not affect the completion of the upward trip. After the interlock circuits have been reestablished, the car shall automatically reverse and respond to the lower landing call. The elevator shall operate similarly for the down direction of travel. A time limit relay shall be provided, arranged to hold the car at the landing which it has stopped for a predetermined period. After

all car and landing calls have been answered, the car shall remain parked at the floor landing where last used, until another call is registered. A landing button pressed momentarily at the same floor at which the car is parked shall automatically open the car and hoistway doors.

5.3 Special Operation (Elevator No. 9): There shall be no pushbutton at the first landing. There shall be one dispatch button at the second landing and one dispatch button approximately 80 feet from the hoistway at the second landing to allow the car to be sent to the first landing. On arriving at the first landing, the hoistway and car doors shall open and remain open for a predetermined time before closing. When the hoistway doors close at the first landing, the car shall automatically return to the second landing and park with the doors closed. The door open button in the car operating panel shall operate only when the car is at the second landing.

5.4 Special Operation (Elevator No. 15): Operation shall be call and send from the second landing. When the elevator is sent to the first landing from the second landing, it shall park at the first landing after a normal opening and closing of the doors. The hall pushbutton at the first landing shall not operate the elevator but shall operate only as a door open button if the elevator is at that landing. A jewel, marked "Car Here" shall be provided in the hall pushbutton fixture on the first landing and at a remote location on the first landing. The jewel shall light when the car is at the first landing.

5.5 Special Operation (Elevator No. 16): Operation shall be call and send from the first landing to the second landing at the front or to the second landing at the rear. After stopping at the second landing, the car shall park there with its doors closed. Each hall pushbutton fixture at the second landing shall be provided with only a door open button which will open the doors if the car is parked at that landing. The hall pushbutton fixture on the second landing shall include a jewel to light when the car is at that landing. The jewel shall be marked "Car Here".

5.6 Emergency Power Operation: Elevators No. 9, 10, 11, 12, 13 and 14 shall be arranged to return automatically to the lowest floor on emergency power and park with the doors open. Elevators No. 9, 10, 11, 12, 13 and 14 shall not run in the up direction when emergency power is on. Elevators No. 15 and 16 shall continue to operate in their normal mode of operation on emergency power.

5.7 Special Operation (Smoke Detection - Elevators Nos. 9 through 16): Elevator Nos. 9 through 16 shall operate in accordance with ANSI A17.1, Rule 211.3 "Operation of Elevator Under Fire or Other Emergency Conditions".

5.8 Operating Station: Car operating station shall consist of a service cabinet with a locked door and a flush mounted car operating panel.

5.8.1 Service Cabinet: Service cabinet shall contain the following:

a. Car light switch.

b. Switch for by-pass of door light-ray devices (Elevators No. 10, 11, 12 and 14).

5.8.2 Operating Panel: Operating panel shall contain the following car operating devices:

a. Illuminating operating pushbuttons numbered to correspond to the landings served by the elevator (Elevators No. 10, 11, 12, 13 and 14).

b. Emergency stop button (red).

c. Emergency alarm bell button.

d. Door open button.

e. Door close button.

f. Ventilation fan switch.

6. ELEVATOR MACHINE: The elevator machine shall be a direct driven hydraulic pump and plunger type. All rotating parts shall be properly balanced to eliminate vibration and shall be provided with restraining devices to prevent movement due to earthquake. Machines and controller frames in the elevator room shall be finished in accordance with the manufacturer's standard practice. All iron work, metal fittings, and other uncoated ferrous surfaces exposed in the hoistway, machine room and areas adjacent thereto shall be cleaned and painted with one coat of approved rust-inhibiting paint and one coat of exterior enamel.

6.1 Power Units: Power unit (oil pumping and control mechanism) shall include an oil-hydraulic pump, an electric motor, a V-belt drive assembly, an oil strainer in the suction line, a structural steel outer base with tank supports, an oil tight drip pan, a floating inner base for mounting motor pump assembly combined in a compact and neatly designed self-contained unit. The pump shall be especially designed and manufactured for oil-hydraulic elevator service. It shall be of the positive displacement screw type, inherently designed for steady discharge with minimum pulsations. Motor shall be of standard manufacture, designed for oil-hydraulic elevator service. It shall have a duty rating to comply with the speed and load herein specified. Drive shall be multiple V-belt with sheaves. Mounting shall be designed to isolate the power unit to prevent transmission of vibration to the building structure.

6.2 Oil Control: Oil control unit shall consist of an Up Valve, a Down Valve, "up and down" Leveling Valves, a Check Valve, a high pressure Relief Valve, a Tank Shut Off Valve and a Manually Operated Lowering Valve. All adjustments shall be accessible and shall be made without removing the assembly from the oil line. Oil reservoir shall be a reinforced overhead tank

with a tank cover. A strainer that can be readily cleaned shall be provided to prevent foreign materials from the oil reservoir entering pump and control system. A blow-out proof muffler shall be provided in the oil line to damp pulsations from the pump.

6.3 Cylinder-Plunger Unit: The cylinder-plunger unit shall be designed and constructed in accordance with the requirements of ANSI A 17.1. It shall be of sufficient size to lift the gross load the height specified, at the rate speed specified, and shall be factory tested to insure adequate strength and freedom from leakage.

6.4 Coatings: Provide protective coatings on the cylinder successively consisting of (1) an initial priming coat of not coal tar enamel and (2) a fiberglass wrap, (3) a second coat of hot coal tar enamel with (4) an asbestos-felt wrap and (5) a protective overall wrap of Kraft paper.

6.5 Liner: The cylinder hole shall be lined with a steel well casing liner to accommodate the cylinder unit.

6.6 Motors: Electric motors shall comply with NEMA Standard MG-1.

7. CONTROL EQUIPMENT: The Elevator Control shall be across-the-line start for a single speed A.C. motor used to drive the pump supplying oil to the piston and which pumps for the "up" direction only. Stopping shall be accomplished by sequentially throttling and stopping oil flow. Leveling shall be accomplished by restricting oil flow, by passing a measured quantity of oil, or providing an auxiliary low-capacity pump. Down operation shall be accomplished by opening a down valve and allowing oil to return to the storage tank. The elevator controller shall be designed to control the starting, stopping and speed of the elevator and to give the operation herein specified. All control equipment shall be enclosed in sheet metal cabinets with removable hinged doors and provided with ventilating louvers. Controller mounting shall be designed to prevent transmission of vibration or noise to the building.

7.1 Controller: A controller shall be provided for the elevator. The controller shall contain electromagnetic contactors mounted on a panel designed for mounting on a substantial self-supporting steel frame designed for floor mounting. Bottom edge of the controller panel shall clear the floor by at least 6 inches. The controller shall provide the required electrical operation of the elevator control system. Supporting solid state circuit shall be used.

7.2 Switch and Relay Contacts: Switch and relay contacts provided shall be designed to prevent sticking due to fusing. The controller circuit shall be designed so as to minimize arcing across contacts. All wiring shall be mounted on the rear of the panel, neatly formed either vertically or horizontally and cleated. The wiring on the panel shall have flame resistant insulation. All connections to field apparatus shall be made at clearly designated junction blocks and/or studs.

7.3 Self-Leveling Feature: Each elevator shall be provided with a two way, self-leveling feature that will automatically bring the car floor to within 1/2 inch of level with the floor landing regardless of load, or direction of travel. This self-leveling shall, within its zone, be entirely automatic and independent of the operating service and shall be designed to prevent or correct overtravel as well as undertravel of the car with respect to the landing sill level.

8. OPERATING PANELS AND POSITION INDICATORS:

8.1 Panels: The face plates of all car operating panels and landing pushbutton stations shall be designed for flush mounting, shall be of round edge metal of approved material and design, and shall be not less than 1/8 inch thick. Face plates shall be stainless steel. The car operating panels and landing pushbutton stations shall be located at approved locations.

8.2 Pushbuttons: Pushbuttons in car operating panel and pushbutton stations shall be of heavy and substantial construction with contacts and wearing parts of materials and sizes to meet the severe requirements of elevator service. Buttons shall be so designed that a spring will take up the initial pressure from which contact is made and further pressing shall seat the button on or in the face plate. Landing call buttons and registered call signal indicators shall have their function indelibly and legibly identified by legend or arrow. When a landing call button is operated, the button shall be illuminated to indicate the call has been registered. Signal indicator shall be extinguished when the car has served the registered call.

8.3 Car Operating Panel Station: The car shall be equipped with a car operating panel station provided with the required controls for the type of operation specified under paragraph entitled "Car Operation and Control".

8.4 Switches and Devices: Switches and devices on the car operating panel shall be the elevator manufacturer's standard grade. Each device and its operating positions shall be legibly and indelibly identified. The car dispatching buttons in car operating panels for corresponding floors shall, where possible, be located in identical relative positions.

8.5 In-Car Lanterns: A visual signal shall be provided in each door jamb along with an audible signal indicating to the prospective passenger the car answering the call and the direction of travel. The audible signal shall sound once for the up direction and twice for the down direction.

8.6 Remote Position Monitoring: Dry contacts shall be provided for each car to indicate car position and connected to the Field Interface Device (FID) terminal cabinet specified in Division 13.

9. HOISTWAY AND CAR EQUIPMENT:

9.1 Guide Rails and Fastenings: Guide rails for car shall be accurately machined, standard "T" section guide rails with tongue and groove joints.

Substantial machined fish plates shall be used to form the rail joints. Rails shall be plumb within 1/8 inch of true vertical and fastened to brackets or other supports by rail clamps and shall be supported to prevent distortion due to eccentric loading. All shimming required shall be of metal securely held in place. Fish plates shall be located so as not to interfere with supporting clamps and brackets. Each fish plate bolt shall be fitted with a split spring steel lockwasher. Brackets or other supports shall be fastened to building hoistway walls by bolting or welding. All necessary guide rail supports shall be provided as required to prevent guide rail deflection and stresses exceeding the limits prescribed by the ANSI Safety Code A 17.1. When concrete walls are used for the support of guide rail brackets, fastenings shall be made to suitable cast-in-place inserts or by means of anchor bolts of the proper type and size. The inserts and all information relative to their location and placement shall be furnished. Anchor bolts, when used in lieu of inserts, shall be of the self-drilling tubular, externally slit steel expansion shell with single cone expander. The anchor shall develop the strength of the bolt after installation. Anchors shall be flush mounted. Guide rails shall be suitably bottomed in the pit floor. When the building is completed, the guide rails shall be checked for alignment and shall be clean, free from rust and any signs of abrasion prior to acceptance.

9.2 Spring Buffers: Not less than two spring buffers shall be provided for the car.

9.3 Pit Switch and Light: A pit switch accessible from the bottom terminal opening or from the pit access opening, shall be provided in the pit, arranged to interrupt the power supply to elevator motor and to stop the elevator independently of the regular operating device to permit safe access to the pit. Location of pit switch and light switch for pit shall be above the ladder. Light shall be located 6 feet above pit floor.

9.4 Automatic Terminal Stops: Upper and lower normal terminal stopping devices shall be provided in the hoistway, and shall be arranged to automatically stop the car from any speed attained in normal operation within the top and bottom overtravels, independently of the operating device, final terminal stopping devices and the buffers. Top final terminal stopping devices shall be provided for the elevator and shall be arranged to automatically stop the car within the top clearance independently of the operation of the normal terminal stopping devices. The final terminal stopping device, when operated, shall prevent further normal operation.

9.5 Hoistway Door Interlocks and Car Door Contact: Each hoistway entrance shall be equipped with an approved type interlock. An electrical interlocking device separate from mechanical interlock will not be approved. The interlock shall prevent operation of the car until the hoistway doors are locked in the closed position and shall prevent opening the doors at any landing from the landing side except by special key, unless the car is at rest at that landing, or is in the leveling zone and stopping at the landing. No accidental ground in the electric circuit shall prevent the operation of the interlocks as herinbefore described. The interlocks shall be so located as to

have a ready, unobstructed access for periodic maintenance inspection and repairs. The car doors shall be equipped with a contact which will prevent operation of the car unless the doors are closed.

9.6 Guide Shoes: Guide shoes shall be provided in adjustable mountings on each side of car. They shall be rigidly secured in accurate alignment at the top and bottom of the car frame. The guide shoes shall be roller type which run on dry unlubricated guide rails or flexible type sliding shoes with plastic gibs which run on lubricated guide rails. After adjustment the shoe brackets shall be dowelled with 3/16 inch pins.

9.6.1 Roller Type Guide Shoes: Each guide shoe shall be of an approved type consisting of rollers assembled on a substantial metal base and designed and mounted so as to provide continuous contact of all rollers with the corresponding guide rail surfaces under all conditions of load and operation. The rollers shall run on the three finished guide rail surfaces. Each roller shall be tired with a durable resilient oil-resistant material and shall operate quietly under all conditions of load and operation.

9.6.2 Flexible Type Sliding Guide Shoes: Flexible type sliding guide shoes shall consist of a swivel type shoe assembled on a substantial metal base in such a manner as to permit self alignment. Each shoe shall be provided with approved renewable plastic gibs. The car guide shoes shall be provided with spring takeup for side play between guide rails. Renewable plastic wearing gibs shall be fabricated from an approved durable plastic compound material having a low coefficient of friction and long wearing qualities when operated on guide rails receiving infrequent light applications of a suitable rail lubricant.

9.7 Wiring: Wiring shall be provided in the hoistway and machine room adequate for the proper operation of the equipment. Wire and cable for light, and signal circuits in the elevator machine room and hoistway shall conform to elevator traveling cable specified in the National Electrical Code for the particular type of location. Conductors shall be copper. The minimum size of conductors, exclusive of those which form an integral part of control devices, shall be No. 14 for lighting circuits and No. 18 for operating, control and signal circuits, except that for lighting conductors in traveling cable, No. 16 conductors may be used in parallel to provide a current carrying capacity equivalent to not less than No. 14 size. In no case shall the maximum current carried exceed that specified by the National Electrical Code for the conductor used. All wiring between the various items of elevator equipment and external wiring, and wiring methods shall conform to the National Electrical Code.

9.7.1 Conduit: Wiring shall be in zinc coating rigid steel conduit or electrical metallic tubing with metal outlet boxes, except for traveling cables. Flexible conduit may be used for the short connections not subject to moisture, oil or embedment in concrete, but such runs shall contain a green equipment grounding conductor. Fittings shall be of the threadless type. Runs in the elevator hoistway or in the floors shall be installed in an

orderly manner. Connections to the controller shall be made in a manner to minimize transmission of vibration or noise to the building.

9.7.2 Working Light Circuit: Working light circuit and switch for lampholder outlets, including porcelain medium base lampholders fitted with wire lamp guards, shall be provided on car crosshead and under the car platform. In addition, duplex plug receptacle shall be provided on top of the car. The car light switch on the car panel shall also control the lamps and plug receptacle on the exterior of the car.

9.7.3 Traveling Cables: Traveling cables shall be Type E, designed for elevator service in accordance with the National Electrical Code, and shall be sufficiently flexible to readily adapt to all changes in the position of the elevator car and hang straight without twist. The cables shall be capable of bending 360 degrees with an inside radius of one foot without any permanent set and without cracking of the outer covering. The open loop shall show no tendency to twist upon itself. Traveling cables shall have non-metallic fillers and shall be suspended by looping cable around supports. The traveling cables shall terminate in a terminal box located on the bottom of the car platform. The terminal boxes shall have approved connection strips for connecting conductors and in addition to said devices for connecting conductors, approved strain devices for connecting the supporting strands and relieving the conductors of the traveling cables of all strain. The swing of the trail cables shall be checked when the elevator is running and all shields and pads necessary to prevent chafing shall be installed. The loop in the traveling cables shall be not less than two feet unless otherwise approved. The traveling cables and the corresponding groups of conductors connecting these cables to the control, signal, and car operating panels, shall each contain at least 10 percent spare conductors, but not less than 2 spare conductors of the same size and type. Each traveling cable conductor shall have a distinctive color coded outer covering for identification. Terminal blocks shall have indelible identification numbers for each terminal connection.

9.7.4 Hoistway Access Switches: Hoistway access switch shall be provided.

9.7.5 Car Stall Protective Circuit: A protective circuit shall be provided which will stop the motor and the pump and return the car to its lowest landing in the event that the car while traveling up does not reach its designated landing within a predetermined time interval. The circuit shall permit a normal exit from the car but prevent further operation of the elevator until the trouble has been corrected.

10. CAR AND HOISTWAY DOOR ACCESSORIES:

10.1 Power Operators: Power operators for horizontal sliding doors shall be automatic electric operators designed to operate the car and hoistway doors simultaneously. The doors for automatic car operation, shall be one foot per second opening and one foot per second closing. Doors shall operate

smoothly without vibration, slam, or shock. The electric operator shall open the car and the hoistway doors at the landing where the car has stopped or is in the leveling zone and shall close the doors before the car can leave the landing as specified under paragraph entitled "Car Operation and Control". The door operator shall permit the doors to be opened readily by hand from within the car, when the electric power fails or is interrupted. An automatic spring closer shall be provided for each hoistway door. Door mechanism shall not create shaftway interference.

10.2 Safety Edge: A safety edge or door protective device shall be provided on the front edge of each leading car door panel and shall extend the full height of, and project beyond, the front edge of door panel. When the doors are open, the safety edge may project into the opening. The safety edge shall be arranged on automatic operation of elevator so that should it touch a person or any obstruction in its path, while the doors are closing, it shall automatically cause both the car and the hoistway doors to return to the opening position. Front edge of safety edge shall lead the front edge of hoistway doors in closing by at least 1-1/2 inches.

10.3 Light Ray Devices (Elevators No. 10, 11, 12 and 14): A light ray device shall be provided projecting at least two rays at approved heights across the car entrance in the space between the car and the horizontal sliding hoistway doors. The interruption of either ray by a person or object shall prevent the doors from closing, and if the doors are in the process of closing, shall cause the doors to reopen. Doors shall close a short time after the light rays are reestablished. The design of the device shall include means that will make it inoperative after a prolonged interruption of either ray beyond a predetermined interval, or the duration of operation of the device itself may be limited to that interval. In either case, at the end of the predetermined interval the doors shall begin to close in the normal manner. If the safety edge is contacted during closing, it shall cause the car and hoistway doors to return to the open position as specified under the paragraph entitled "Safety Edge". A switch shall be provided in the service cabinet which will permit by-passing the light ray circuit when required.

11. CAR FRAME, PLATFORM AND ENCLOSURE:

11.1 Car Frame: The car frame shall consist of steel channels and angles securely riveted, welded, or bolted, and substantially reinforced and braced.

11.2 Car Platform: Car platform shall be as hereinbefore specified. The platform shall consist of rigid structural steel frame members of ample size properly reinforced with intermediate steel stringers and shall be designed for concentrated and eccentric type loading. The platform shall be built entirely of steel. The underside of the platform shall be covered with sheet steel not less than 0.0179 inch thick with the exposed edges and joint folded. The platform shall be supported in level position from the uprights by means of four adjustable tie rods. The platform shall be equipped with a fluted metal threshold plate of approved finish with grooves for door guides

for sliding doors. The platform shall be provided on the car entrance side with a metal fascia of not less than 16 gage steel extending beyond the underside of platform to act as a toe guard for a vertical distance equal to at least the length of the leveling zone plus 3 inches more, with the lower portion bent back at least 60 degrees but no more than 75 degrees. The car frame shall be effectively sound isolated from the plunger by means of rubber pads at least one inch thick or equivalent material.

11.3 The platform shall be arranged to accommodate one piece loads, such as wheeled food carts, stretchers and x-ray equipment, weighing up to 1,100 pounds.

11.4 Cars:

11.4.1 Elevators No. 10, 11, 12 and 14: Cars shall consist of 16 gage furniture steel shell panels, 96 inches high, arranged for the application of interior panels; 14 gage type 302 stainless steel return panel, 84 inches high, including integral column and arranged with suitable cutout for car operating fixture; 14 gage Type 302 stainless steel fascia, full width of car; and 14 gage furniture steel car top with matte white painted finish. Car top shall be reinforced to withstand the weight of 300 pounds on any two-foot square area. Vertical panels shall be 5/8 inch thick particle board, faced with architectural tambour, prefinished, fire-rated white oak on flexible backing specified in section entitled "Architectural Woodwork".

Adequate reinforcement, secured by welding, shall be provided at all cutouts. Recessed base shall be 4 inches high, with baked enamel finish. Suspended ceiling shall be faced with bronze mirror finish and shall include six down lights. Interior metal surfaces, except stainless steel, bronze, and aluminum, shall be given a baked enamel finish consisting of not less than three coats of primer and surfacing material of three finish coats of enamel. Each coat shall be evenly applied in sufficient quantity to completely hide the preceding coat, baked at proper temperature, and rubbed smooth. The final coat shall be rubbed to an eggshell waterproof finish. The car platform shall be recessed to receive carpet specified in section entitled "Carpet". Type 302 stainless steel handrails, 1/4 inch by 8 inches, shall be provided on walls without doors. All stainless steel shall have satin finish.

11.4.2 Elevators No. 9, 13, 15 and 16: Cars shall consist of 14 gage furniture steel shell panels, 96 inches high, with baked enamel finish; 14 gage Type 302 stainless steel return panel, 84 inches high, including integral column and arranged with suitable cutout for car operating fixture; 14 gage Type 302 stainless steel fascia, full width of car; and 14 gage furniture steel car top with matte white painted finish. Car top shall be reinforced to withstand a weight of 300 pounds on any two-foot square area.

Adequate reinforcement, secured by welding, shall be provided at all cutouts. Applied base shall be 4 inches high, finished with baked enamel. Suspended ceiling shall consist of an extruded aluminum frame with baked enamel finish and top set 1/2 inch x 1/2 inch x 1/2 inch metal eggcrate diffusers painted

white. Lighting fixtures shall be fluorescent type. Interior metal surfaces, except stainless steel, bronze and aluminum, shall be given a baked enamel finish consisting of not less than three coats of primer and surfacing material of three finish coats of enamel. Each coat shall be evenly applied in sufficient quantity to completely hide the preceding coat, baked at proper temperature, and rubbed smooth. The final coat shall be rubbed to an eggshell waterproof finish. Flooring material shall be inlaid sheet vinyl. Type 302 stainless steel handrails, 1/4 inch by 8 inches; shall be provided on walls without doors. All stainless steel shall have satin finish.

11.4.3 Entrances: Car doors shall be 1-1/4 inches thick, with 16 gage Type 302 stainless steel facing with satin finish. The height and width of opening shall be not less than that provided by the hoistway doors. Car doors shall be equipped with safety edge. Car door shall be supported at top with heavy duty hangers, with not less than two ball bearing sheaves for each hanger. Hangers shall be designed for as nearly noiseless operation as possible. Bottom of door shall be guided by non-metallic gibs sliding in a machined groove in sills with at least two gibs to the door panel. Gibs shall be replaceable without removing door from hanger rail.

11.4.4 Car Lighting: Car lighting shall provide at least 5 foot candles illumination on the elevator floor and threshold.

11.4.5 Emergency Car Lighting: Elevators shall have the car equipped with an emergency car lighting system consisting of a battery, lamp, and controlling relay so arranged that it will automatically provide emergency lighting in the car in the event of power failure in the normal car lighting circuit. The battery and relay shall be housed in a sheet steel box, with hinged cover and latch, mounted on top of the elevator car. The arrangement shall permit ready access for inspection, maintenance and replacement of batteries. A card holder with 3 by 5 inch card for recording dates of service shall be provided on the outside of the box. The following legend "Check condition of battery every 12 months and replace if necessary" shall be conspicuously printed on the box.

11.4.5.1 Battery: The battery shall be a 6 or 12 volt sealed, leakproof type with integral trickle charger model with screw-type terminals and insulated fasteners connected to a plug-in receptacle on top of car. The battery shall have a capacity rating sufficient to light the bulb or the sealed beam unit for not less than two hours.

11.4.5.2 Relay: The relay for connecting the emergency light to the battery power supply shall be of the normally closed type designed for continuous service with the relay coil operated by the normal lighting power supply. The relay contacts for the battery supply shall be of the low-resistance wiping type.

11.4.5.3 Light Fixture: The emergency car light fixture shall consist of either a reflector and a proper voltage lamp mounted in a housing on the exterior of the car into an opening near the front of the car over the

operating panel with the clear lens protruding into the car, or a proper voltage sealed beam unit. The unit shall provide adequate illumination to permit operating the various components on the elevator panel. The fixture shall be accessible from the top or interior of the car to permit replacement of lamp or cleaning reflector. The lamp shall be rated not less than 12 nor more than 25 watts.

11.5 Ventilation: Ventilation shall consist of a two-speed motor-driven ventilation fan located on the top of the cab above a neat appearing grille and inlet vent slots in the wainscot not more than 12 inches above the base as indicated. A switch shall be provided on the car panel to control the fan.

11.6 Emergency Exit: An emergency exit shall be provided in top of the car. The exit shall conform to the requirements of ANSI A17.1 rule 204.1e.

12. HOISTWAY DOORS AND ENTRANCES:

12.1 General: Door and entrance assembly shall be provided for horizontally sliding doors at each hoistway entrance. All work shall be set from centerline of aligned car guide rails and shall be in perfect alignment with elevator car opening and car platform. Before the parts are assembled all steel surfaces shall be thoroughly cleaned of all rust, oil, grease, and dirt, by benzine wash, or otherwise, and shall then immediately be given a coat of approved rust-inhibiting paint. Surfaces which will be concealed shall be cleaned and coated prior to assembly or installation.

12.2 Assemblies for Horizontal Sliding Doors: Hoistway entrance doors shall be power operated. Entrance door assemblies shall be complete including frames, doors, sills, fascia plates, hardware, struts, and accessories necessary for proper operation. Doors for Elevators No. 9, 13 and 16 shall be two speed side opening. Doors for Elevators No. 10, 11, 12, 14 and 15 shall be single speed side opening.

12.2.1 Hoistway Entrance Unit Frames: The entrance frames shall be fabricated of 14 gage stainless steel and shall be formed to the design shown on the approved drawings. The component members constituting the unit frame shall include header, struts, and frame of door opening. The header shall be of sufficient size and thickness to provide support for the frame and hangers. The strut angles shall be of sufficient size to support the entrance and shall be secured to the sill and hoistway construction. The frames on hoistway side shall be carried far enough back to present a neat appearance and shall be secured to sill and header. Frame miters shall be neatly welded and ground smooth and even.

12.2.2 Car and Hoistway Door Control: The car and hoistway doors shall open automatically after the car has fully stopped at a landing or while in the leveling zone. The doors shall close after a predetermined time unless a car button is pressed which shall immediately close the doors. Pressure of a landing button at the floor at which a car is standing with closed doors shall open the doors. The doors may be reopened from the car by pressing the "Door

Open" button. Doors shall be arranged to remain open for a time period sufficient to meet Handicapped Requirements.

12.2.3 Hoistway Entrance Sills: Hoistway entrance sills shall be fluted tread with approved non-slip wearing surface. They shall be one piece extrusion of sufficient length to suit the spacing of the two supporting struts. Grooves for the door guides shall be at least 1/2 inch wide. The sills shall be securely fastened to the floor beams by means of 3/16 inch thick formed steel brackets, or equal, suitably spaced. Material for sills shall be extruded aluminum. Sill shall be of the narrow type.

12.2.4 Doors: Hoistway entrance doors shall be of hollow metal construction with flush surfaces on car and landing sides. Doors shall be .0598 inch nominal thickness sheet steel reinforced by formed vertical steel sections, running full height of door and spaced not over 9 inches apart designed to fasten front and rear plates together securely and shall be completely filled with cellular asbestos or approved equal construction. Each door panel shall be reinforced for mounting of interlock and door operator accessories. Bottom of doors shall be guided by non-metallic gibs sliding in a machined groove in sills with at least two gibs to each door panel. Gibs shall be replaceable without removing doors from hanger rails. Hoistway doors shall be constructed in accordance with the requirements of A17.1 and Underwriter's Laboratories requirements for 1-1/2 hour fire rating. Sight guards shall be furnished on the leading edge of the doors to conceal the hoistway beyond the doors.

12.2.5 Hoistway Entrance Door Hangers: Each hoistway door shall be supported at top with heavy-duty hangers equipped with ball bearing sheaves. Hangers shall operate quietly on the tracks. Each hanger shall be designed for an upward thrust against the underside of the track by a ball bearing roller on an adjustable eccentric stud. The tracks and track supports shall be fastened to the header plate.

12.2.6 Hoistway Entrance Door Hanger Covers: Hoistway entrance door hanger covers shall be made of 0.0747 inch nominal thickness sheet steel and shall be constructed to permit ready access for servicing hangers. The covers shall be removable panels or top hinged and shall be equipped with means to hold them securely in the closed position.

12.2.7 Hoistway Entrance Fascia Plates: Hoistway entrance fascia plates shall be made of not less than 0.0747 inch nominal thickness sheet steel and shall extend from top of hanger to sill above. Fascia plates shall be properly reinforced. All necessary supports required to secure fascia plates in place shall be protected. Short fascia plates beveled at 60 to 75 degrees to horizontal shall be provided at the upper and lower terminal landings.

12.2.8 Hoistway Entrance Door Finish: The doors shall be baked enamel finish of approved color finished as specified for passenger car panels.

13. TESTING AND INSPECTION:

13.1 General: When the elevator work included in the contract is fully completed, the Contractor shall demonstrate to the satisfaction of the Contracting Officer, the proper operation of every part of the equipment and compliance thereof with contract requirements, including compliance with all applicable requirements of the ANSI Safety Code for Elevators, Dumbwaiters, Escalators and Moving Walks, A17.1. A certified Government elevator inspector from LANTDIV shall be present at all final inspections and testing. A 14 day notice is required. The inspection procedure outlined in Practice for the Inspection of Elevators, Inspectors Manual, ANSI A17.2 shall form a part of the final inspection.

13.2 Test Instruments: The Contractor shall furnish all test instruments and materials required for final inspection, to determine compliance of the work with the contract requirements.

13.3 Final Inspection: The following tests shall be made at the time of final inspection.

13.3.1 Full-Load Run Test: The elevator shall be subject to a test for a period of one hour continuous run, with full specified rated load in the car. During the test run, the car shall be stopped at all floors in both directions of travel for a standing period of 10 seconds per floor.

13.3.2 Speed Test: The actual speed of the elevator car shall be determined in both directions of travel with full contact load and with no load in elevator car. Speed tests shall be made before the full-load run test. The actual measured speed of elevator car with full load in the "UP" direction shall be within 10 percent of rated speed. The maximum difference in actual measured speeds obtained under the various conditions outlined shall not exceed 25 percent of rated speed.

13.3.3 Car Leveling Test: Elevator car leveling devices shall be tested for accuracy of landing at all floors with no load in car, balanced load in car, and with full load in car, in both directions of travel. Accuracy of floor landing shall be determined both before and after the full-load run test.

13.3.4 Insulation Resistance Test: The complete wiring systems of the elevator shall be free from short circuits and grounds, and the insulation resistance of systems shall be determined by use of a "Megger". The systems shall have an insulation resistance of not less than one megohm.

---END---

SECTION 14400. MOTOR VEHICLE LIFT

1. APPLICABLE PUBLICATIONS: The following publications of the issues listed below, but referred to thereafter by basic designation only, form a part of this specification to the extent indicated by references thereto:

1.1 American National Standards Institute (ANSI) Publications:

B153.1-1974 Safety Requirements for Construction, Care and Use of Automatic Lifts.

1.2 [redacted]

CS142-65 [redacted]

2. QUALITY CONTROL: Unless otherwise specified herein requirements for supervision, inspection, sampling, testing, approval, directing, authorizing and other requirements of similar importance shall be the responsibility of the Contractor Quality Control representative. Approvals, except those required for field installations, field applications and field tests, shall be obtained before custom fabrication is started and before delivery of materials or equipment to the project site.

2.1 Quality Assurance Provisions:

2.1.1 Responsibility for Inspection and Test: The contractor shall be responsible for the performance of all inspection and test requirements. A certified Government inspector from LANTDIV will be present at all final inspections and testing. Notify LANTDIV fourteen (14) days prior to all final inspections and testing.

2.1.2 Examination: Each lift shall be visually examined to determine compliance with the requirements noted, using the following checklist as a guide:

2.1.3 Examination Checklist

Lift not of specified type, class, size or style.
Defective casting or forgings affecting operation or strength.
Insecure or deformed fastening devices.
Threads not in accordance with H28.
Lubrication not as specified.
Burrs or sharp edges.
Safety devices not as specified.
Positive stop not provided.
Controls not as specified.
Painting not as specified.
Identification marking not as specified.
Handbook not as specified.
Workmanship not as specified.

2.2 Performance Testing:

2.2.1 Lift Performance Test: The lift shall be prepared for operation and shall be operated in accordance with the handbooks of instructions. For testing purposes, pressures shall be maintained at not less than 100 psig. The lift shall be capable of raising the heaviest vehicle, within the applicable rated weight and dimensional capacity, to the fullest extent of vertical travel in the time specified, and to the height of rise as specified. Any evidence of leakage, malfunction or failure to meet these requirements shall be cause for rejection.

2.2.2 Plunger Assembly Pressure Requirement Test: The plunger assembly shall be operated through its full stroke and forced against its stop under a hydraulic pressure of at least 350 psig for 15 minutes. There shall be no evidence of damage or fluid leakage.

2.2.3 Plunger Assembly Operational Requirement Test: The plunger assembly shall be operated to its full stroke and retracted (normal ballast acceptable) at zero pressure, and shall be observed to test for contact freedom in the bearing and guide assembly.

2.2.4 Superstructure Overload Requirement Test: One completed superstructure section shall be inverted across two fixed bars which contact the lifting members of the superstructure to a point 3" from their extreme ends (the maximum vehicle pickup point) and a force shall be brought to bear against the center of the bolster plate. Pressure shall be exerted to 135% of rated load and held for 5 minutes, relaxed, then alternately applied and relaxed at 2 cycles per minute for 6 complete cycles. Upon completion of these cycles, there shall be no evidence of damage or permanent deformation of the superstructure members.

2.2.5 Performance and Product Characteristics:

Lift: Type, Class size & style	Rated capacity (min.) w/center load	Height of rise (min.)	Wheelbase capacity (min to max)	Minimum inside tread range
	Pounds	Inches	Inches	Inches
Type II. Style a	5,000	66	Frame contact	36 to 50

Definitions:

Rated Capacity: As defined in CS 142-65.

Height of rise: The distance between the floor level and the points of contact between lifting members and vehicle with plunger fully extended.

Wheelbase: The distance between the centerlines of the front and rear axles on two-axle vehicles, and the distance between the centerline of the front axle and the centerline of the rearmost axle on three-axle vehicles.

Inside tread: The distance between the inner sides of the vehicles's tires.

2.2.5.1 Type II, Style A. The Type II, Style A, air-oil operated lifts shall be of the single-post, full-hydraulic swivel arms equipped with sliding pads, free-wheel operation, and shall be capable of handling four-wheel vehicles of the dimension and weight characteristics listed.

2.2.6 Rate of Ascent: Each lift shall be capable of raising a capacity load to the full extent of vertical travel in 100 seconds or less.

2.2.7 Height of Rise for each lift shall be as specified.

2.2.8 Working Pressure: Furnish a compressor, and all required air lines required, of sufficient capacity to maintain sufficient pressure to operate both lifts simultaneously.

2.2.9 Positive Stop: Each lift shall be provided with a positive stop to prevent the lift from being raised beyond the safe limit of vertical travel.

2.2.10 Plunger and Cylinder Assembly Pressure Requirements: The plunger and cylinder assembly shall be capable of withstanding a hydraulic pressure of not less than 350 psig when the plunger assembly is extended to its maximum travel position, without damage or leakage of fluid.

2.2.11 Control Mechanism: Control mechanism shall be in accordance with Commercial Standard CS 142-65.

2.2.12 Adjustments: On all lifts, the design and assembly of components that must be moved to accommodate vehicles of various wheelbase and tread dimensions shall be such that any necessary adjustment can be accomplished with manual exertion of not more than 50 lbs. force on any individual component or assembly.

2.2.13 Plunger-Assembly Operation Requirement: The plunger assembly shall operate freely and at a constant rate of movement throughout its full extension and retraction and shall not bind or catch in the bearing and guide assembly.

2.2.14 Superstructure Overload Requirement: The superstructure shall be capable of supporting loads of at least 135% of rated load capacity.

2.3 Product Identification: The lifts shall be marked for identification, including the applicable serial number.

3. SUBMITTALS: All submittals specified herein or required shall be submitted to and approved by the Contracting Officer prior to commencement of work.

3.1 Tests and Certificates: The testing requirements for materials incorporated in referenced documents will be waived provided the Contractor submits certificates from the manufacturer stating that materials furnished for this project conform to all requirements of this specification and the referenced documents. Copies of the test reports need not be submitted except as specifically requested by the Contracting Officer.

3.1.1 Sample Certificate: The certificate shall not contain statements that could be interpreted to imply that the product does not meet all requirements specified, such as "as good as"; "achieve the same end use and results as materials formulated in accordance with the referenced specification"; "equal or exceed the service and performance of the specified material". The certificate should simply state that the product conforms to all requirements specified.

SAMPLE CERTIFICATE

The manufacturer hereby certifies that all following products being furnished for this project conform to all requirements of the project specifications and the respective reference specifications:

EXAMPLE

MANUFACTURER AND PRODUCT	REFERENCE SPECIFICATION
John Doe Company Galvanized Steel	ASTM A525

SIGNATURE AND TITLE

3.1.2 Handbook of Instructions: The supplier shall furnish two copies of a handbook of instructions with each lift supplied under this specification. The handbook shall contain all installation and operating instructions, drawings, illustrations, parts list, manufacturer's part numbers, lubricating instructions, assembly and disassembly installation, operation and maintenance of the lift.

3.1.3 Handbook Approval: A preliminary copy of the instruction handbook shall be submitted and approved prior to publication and delivery.

3.2 Shop Drawings: Shop drawings shall be submitted and approved before work is started. Shop drawings shall show size, location, fabrication, mounting devices, fasteners and other pertinent details. Design calculations and complete erection instructions shall be submitted. The shop drawings and data shall be complete in one submittal.

3.3 Manufacturer's Catalog Data or other Descriptive Data: Manufacturer's catalog data or other descriptive data of installation procedures, factory protective packaging, related hardware, accessories, and fasteners.

4. DELIVERY AND STORAGE: Prefabricated components, and other manufactured items shall be delivered, stored and handled in such a manner that they will not be damaged or deformed. Materials stored on the site before erection shall be stacked on platforms or pallets and covered with tarpaulins or other suitable weathertight covering. Upon arrival on the job site, motor vehicle lift and accessories shall be inspected for moisture accumulation. If found wet, the moisture shall be removed and protected until used.

5. MATERIALS:

5.1 Materials: All parts used in the fabrication of the lifts shall be new and of the quality to produce a lift to meet the requirements described herein.

5.1.1 Castings and Forgings: All castings and forgings shall be free from defects, scale and mismatching which affect the efficiency or function of the part. In no event shall such processes as welding, peening, plugging or filling with cold solders or metallic pastes be used on castings or forgings of the lifts without authorization of the Architect.

5.1.2 Fastening Devices: All screws, pins, bolts and similar parts shall be installed with means for preventing loss of tightness and adjustment. All such parts, when subject to removal or adjustment, shall not be swagged, peened, staked or otherwise permanently deformed.

5.1.3 Threads: All threads shall be in inch units of measurement and comply with NBS H28.

5.1.4 Lubrication: All bearings (except sealed-for-lift type) and other working parts shall be provided with means for lubrication. Means shall be provided in the assembly of hydraulic lifts to lubricate the plunger throughout its maximum travel, and to prevent water, dirt and other foreign matter from entering the assembly.

5.1.5 Interchangeability: All replaceable parts shall be manufactured to definite standards, clearances and tolerances in order that any such parts of a particular type or model can be replaced or adjusted without requiring modification.

5.1.6 Surfaces: All parts shall be cleaned and free of harmful or extraneous materials. External edges and corners shall be rounded or beveled.

5.1.7 Safety Devices: Each lift shall be equipped with safety devices conforming to the applicable requirements of Commercial Standard CS 142-65. Each air-oil operated lift shall be equipped with low-oil supply safety control. An automatic mechanical device shall be provided to hold the lift in the fully extended position. Protection shall be provided against electrical shock for electric-oil lifts.

6. FABRICATION: Furnish and install motor vehicle lifts as a complete operating installation.

6.1 Construction: The lifts shall be complete so that when installed and connected to the specified source of power they shall meet or exceed the requirements specified herein. Construction shall be free from any characteristics or defects that will prevent the lifts from satisfactorily performing the functions specified herein.

7. INSTALLATION: All materials shall be installed in strict accordance with the manufacturer's printed erection instructions, and the approved shop drawings. Care shall be exercised in storing, handling, and installation to prevent any damage to the motor vehicle lift and accessories. Size and spacing of fasteners used in erection shall be as recommended by the manufacturer and shall be designed to withstand the design loads specified herein.

7.1 General: Examine alignment of structural steel before erecting motor vehicle lift. Do not proceed with installation if structural steel is not aligned to the tolerances set up by vehicle lift manufacturer. Erection shall be by the manufacturer's own erection division or a previously approved and licensed installer.

7.2 Joint Sealing Material: Scaling material of the type recommended by the motor vehicle lift manufacturer shall be provided to seal all closures, trim and elsewhere as necessary to provide leak proof construction.

7.3 Workmanship shall be of first quality and be of a neat general appearance.

7.4 Trim: All trim and related closures and accessories in connection with the motor vehicle lift shall be provided as indicated and as necessary to provide leak proof installation. Details of installation which are not indicated shall be in accordance with the motor vehicle lift manufacturer's printed instructions and details or the approved shop drawings.

8. FIELD REPAIR AND TOUCH-UP: Where motor vehicle lift or accessories have factory finish damaged, repair in accordance with manufacturer's touch-up system. Repaired surfaces not acceptable shall be replaced without expense to the Government.

8.1 Repair Parts: A repair parts kit shall be furnished with each unit. The kit shall contain the parts and quantity specified in the contract.

8.2 Painting: Painting and finishing of the lifts shall be in accordance with the supplier's standard practice provided the following minimum criteria are met or exceeded: all surfaces to be painted shall have been cleaned to be free of all foreign matter detrimental to painting; and at least one coat of primer and one coat of enamel have been applied.

---END---

SECTION 14555. LINEN CHUTE

1. APPLICABLE PUBLICATIONS: The following publications of the issues listed below, but referred to thereafter by basic designation only, form a part of this specification to the extent indicated by the references thereto:

1.1 American Society for Testing and Materials (ASTM) Publications:

A176-75	Stainless and Heat-Resisting Chromium Steel Plate, Sheet, and Strip.
A180-75	Flat-rolled Stainless and Heat-resisting Steel Plate, Sheet, and Strip.

1.2 National Fire Protection Association (NFPA) Publications:

82-1977	Incinerators, Waste and Linen Handling Systems and Equipment.
101-76	Code for Safety to Life from Fire in Building and Structures.

2. QUALITY CONTROL: Approvals, except those required for field installation, field application and field tests, shall be obtained before delivery of materials to the project site.

3. SUBMITTALS:

3.1 Tests and Certificates: The testing requirements for materials incorporated in referenced documents will be waived provided the Contractor submits certificates from the manufacturer stating that materials furnished for this project conform to all requirements of this specification and the referenced documents. Copies of the test reports need not be submitted except as specifically requested by the Contracting Officer.

3.1.1 Sample Certificate: The certificate shall not contain statements that could be interpreted to imply that the product does not meet all requirements specified, such as "as good as"; "achieve the same end use and results as materials formulated in accordance with the referenced specification"; "equal or exceed the service and performance of the specified material". The certificate should simply state that the product conforms to all requirements specified.

SAMPLE CERTIFICATE

The manufacturer hereby certifies that all following products being furnished for this project conform to all requirements of the project specifications and the respective reference specifications:

MANUFACTURER AND PRODUCT

REFERENCE SPECIFICATION

John Doe Company
Stainless Steel

ASTM A176

SIGNATURE AND TITLE

3.2 Shop Drawings: Shop drawings shall be submitted to and approved by the Contracting Officer before delivery of materials to the site. Shop drawings shall show type, sizes, metal gages, installation details, and other details of construction.

3.3 Samples: Samples of materials specified below shall be submitted and approved before work is started:

(a) Chute Material: Two 12 inch by 12 inch units.

(b) Trim: Two 6-inch long units having finish as specified.

4. DELIVERY AND STORAGE: Materials shall be delivered, handled, and stored in such a manner that they will not be damaged or deformed. Materials stored on the site before erection shall be stacked on platforms or pallets and covered with tarpaulins or other suitable weathertight coverings. Materials shall not be stored in contact with materials which might cause staining. All damaged or deformed materials shall be replaced at no expense to the Government.

5. MATERIALS:

5.1 Chute: Chute shall be fabricated from 18 gage Type 430 stainless steel conforming to ASTM A176. Provide 4 clips welded to the exterior of chute riser which hooks over floor frame.

5.2 Intake Door: Type 430 stainless steel full opening, self-closing, side hinged, hand operated door bearing 1-1/2 hour 250 degrees F. UL "B" label. Factory attach UL label to intake door.

5.3 Hopper Type Discharge Opening: Type 430 stainless steel full opening, top hinged, counterbalanced door bearing 1-1/2 hour 250 degree F. UL "B" label. Factory attach UL label to discharge door. Fabricate hopper from same material as chute. The sloped bottom shall be reinforced and supported on a 2-inch pipe pedestal. A 2 inch drain at the low point of the hopper shall permit flushing down the chute with the door closed. Provide lever latch at bottom of door to draw door tight against the gasket when the chute is being flushed down.

5.4 Floor Frames: Fabricated from structural steel and shall extend out to contact floor at four points surrounding the openings through which the chute passes. Prepunch frames for anchor bolts.

5.5 Vent: Vent shall be fabricated from same material as chute and shall extend full diameter thru roof to metal top vent cap 4-foot above roof level. Vent cap shall be provided with screen. Vent shall comply with NFPA's Standard No. 82 and NFPA's Standard 101.

5.6 Door Trim: Fabricate door trim from stainless steel. The words "SOILED LINEN" in 1-1/8 inch high letters shall be embossed in the trim across the top of the intake door.

5.7 Baffle: Top hinged rubber sheet baffle shall be provided for intake door.

5.8 Cylinder Lock: Intake door shall be provided with manufacturer's standard mortise cylinder lock. Cylinder shall be keyed to master keying system as directed by the Contracting Officer.

5.9 Disinfecting and Sanitizing Unit: Unit consisting of proportioning valve, filler cap, rigid polyethylene 1-gallon container, combination top cap and wall mounting bracket, piping and flushing head, shall be provided. Unit shall be equipped with an adjusting screw to regulate the strength of the disinfectant introduced into the flushing water and on-off valve, which permits by-pass of disinfecting and sanitizing unit when desired.

5.10 Sprinkler: Automatic on-off sprinkler shall be provided at the intake. Sprinkler shall turn on when the temperature in the chute rises above 165 degrees F and shut off when the temperature falls below 100 degrees F.

5.11 Access Door: Access door, 15 inch by 15 inch side hinged shall be fabricated from all stainless steel and shall bear a 1-1/2 hour, 250 degrees F. UL "B" label. Factory attach UL label to access door. Access door shall be provided with manufacturer's standard cylinder lock. Cylinder shall be keyed to master keying system as directed by the Contracting Officer.

5.12 Finish: All exposed stainless steel including intake door, hopper type discharge door, door trim, and access door shall have a No. 4 finish in accordance with ASTM A480.

6. FABRICATION: The chute shall be fully factory assembled and all joints, except those required to separate the sections for shipment and installation shall be welded. The intake door shall be bolted in place on throats formed into the chute tube. All chute sections shall flash inside the sections below and there shall be no bolts, clips, or other projections inside the chute to sway the flow of linen. Pre-positioned support frames shall assure proper intake levels and there shall be an expansion joint in the chute between all support points. Reinforce and separately support discharge hoppers and offsets in the impact area.

7. INSTALLATION: Install linen chutes in accordance with the approved shop drawings and manufacturer's recommendations. After installation, adjust all doors to function properly.

---END---

SECTION 15011 GENERAL REQUIREMENTS, MECHANICAL

1. APPLICABLE PUBLICATIONS: The following publications of the issues listed below, but referred to thereafter by basic designation only, form a part of this specification to the extent indicated by the references thereto:

1.1 Federal Specifications:

TT-E-489F & Am 1	Enamel, Alkyd, Gloss (for Exterior and Interior Surfaces).
TT-E-496B & Am 2	Enamel, Heat-Resisting (400 Degrees Fahrenheit), Black.
TT-P-28E	Paint, Aluminum, Heat Resisting (1200 Degrees Fahrenheit).
TT-P-645	Primer, Paint,Zinc-Chromate, Alkyd Type.

1.2 Military Specifications:

MIL-P-15328C & Am 1	Primer (Wash), Pretreatment Blue (Formula No. 117-B for Metals).

1.3 American Society for Testing and Materials (ASTM):

B117-73	Salt Spray (Fog) Testing.

2. APPLICATION: This section applies to all sections of Division 15 of this project except as specified otherwise in the individual sections.

3. SUBMITTALS REQUIRED: Shop drawings, manufacturer's data and certificates for equipment, materials, finish, and pertinent details for each system shall be submitted and approved before procurement, fabrication or delivery of such items to the job site. Partial submission are not acceptable and such submittals will be returned without review. Descriptive data shall be annotated to show the specific model, type and size of each item the Contractor proposes to furnish.

3.1 Shop Drawings: The drawings shall be a minimum of 8.5 by 11 inches in size, except as specified otherwise, and shall include plans, elevations, and sections of equipment and control spaces identifying and indicating proposed location, layout, and arrangement of items of equipment, control panels, accessories, piping, ductwork, and any other items that must be shown to assure a coordinated installation. Drawings also shall indicate adequate clearance for operation, maintenance, and replacement of operating equipment devices. If any equipment is disapproved, drawings shall be revised to show acceptable equipment resubmitted.

3.2 Manufacturer's Data: Information shall be submitted for all material and equipment as specified in the individual section that the Contractor proposes to furnish for accomplishment of the contract work. Submittals for each manufactured item shall be manufacturer's descriptive

literature, equipment drawings, diagrams, performance and characteristic curves, and catalog cuts, and shall include the manufacturer's name, trade name, catalog model or number, nameplate data, size, layout dimensions, capacity, specification reference, applicable Federal and Military specification references, and all other information necessary to establish contract compliance.

3.3 Standards Compliance: Where equipment or materials are specified to conform to requirements of the standards of organizations such as American Society for Mechanical Engineers (ASME), Underwriters' Laboratories (UL), American Gas Association (AGA), and Air Conditioning and Refrigeration Institute (ARI), that use a label or listing as method of indicating compliance, proof of such conformance shall be submitted for approval. The label or listing of the specified organization will be acceptable evidence. In lieu of the label or listing, the Contractor shall submit a notarized certificate from an independent testing organization adequately equipped and competent to perform such services, and approved by the Contracting Officer, stating that the item has been tested in accordance with the specified organization's test methods and that the item conforms to the specified organization's standard.

3.4 Certified Test Reports: Where specified in the individual sections and before delivery of materials and equipment, certified copies of the reports of all tests required in referenced publications shall be submitted for approval. For materials for which certified test reports are not required in the individual sections, the testing requirements in referenced publications formaterials will be waived provided the manufacturer submits certificates stating that previously manufactured materials have been tested by recognized laboratories that such materials meet testing requirements specified, and that the materials furnished for this project are of the same type, quality, manufacture, and proof as that tested. Copies of the test reports need not be submitted except as specifically requested by the Contracting Officer.

3.5 Certificates of Compliance: Where specified in the individual sections, certificates from the manufacturer attesting that materials and equipment to be furnished comply with all requirements of this specification and of the reference publications shall be submitted for approval. The certificate shall not contain statements that could be interpreted to imply that the product does not meet all requirements specified, such as "as good as"; "achieve the same end use and results as materials formulated in accordance with the referenced publications"; "equal or exceed the service and performance of the specified material". The certificate should simply state that the product conforms to all requirements specified.

SAMPLE CERTIFICATE

The manufacturer hereby certifies that all following products being furnished for this project conform to all requirements of the project specifications and the respective reference specifications:

literature, equipment drawings, diagrams, performance and characteristic curves, and catalog cuts, and shall include the manufacturer's name, trade name, catalog model or number, nameplate data, size, layout dimensions, capacity, specification reference, applicable Federal and Military specification references, and all other information necessary to establish contract compliance.

3.3 Standards Compliance: Where equipment or materials are specified to conform to requirements of the standards of organizations such as American Society for Mechanical Engineers (ASME), Underwriters' Laboratories (UL), American Gas Association (AGA), and Air Conditioning and Refrigeration Institute (ARI), that use a label or listing as method of indicating compliance, proof of such conformance shall be submitted for approval. The label or listing of the specified organization will be acceptable evidence. In lieu of the label or listing, the Contractor shall submit a notarized certificate from an independent testing organization adequately equipped and competent to perform such services, and approved by the Contracting Officer, stating that the item has been tested in accordance with the specified organization's test methods and that the item conforms to the specified organization's standard.

3.4 Certified Test Reports: Where specified in the individual sections and before delivery of materials and equipment, certified copies of the reports of all tests required in referenced publications shall be submitted for approval. For materials for which certified test reports are not required in the individual sections, the testing requirements in referenced publications formaterials will be waived provided the manufacturer submits certificates stating that previously manufactured materials have been tested by recognized laboratories that such materials meet testing requirements specified, and that the materials furnished for this project are of the same type, quality, manufacture, and proof as that tested. Copies of the test reports need not be submitted except as specifically requested by the Contracting Officer.

3.5 Certificates of Compliance: Where specified in the individual sections, certificates from the manufacturer attesting that materials and equipment to be furnished comply with all requirements of this specification and of the reference publications shall be submitted for approval. The certificate shall not contain statements that could be interpreted to imply that the product does not meet all requirements specified, such as "as good as"; "achieve the same end use and results as materials formulated in accordance with the referenced publications"; "equal or exceed the service and performance of the specified material". The certificate should simply state that the product conforms to all requirements specified.

SAMPLE CERTIFICATE

The manufacturer hereby certifies that all following products being furnished for this project conform to all requirements of the project specifications and the respective reference specifications:

SECTION 15011 GENERAL REQUIREMENTS, MECHANICAL

1. APPLICABLE PUBLICATIONS: The following publications of the issues listed below, but referred to thereafter by basic designation only, form a part of this specification to the extent indicated by the references thereto:

1.1 Federal Specifications:

TT-E-489F & Am 1	Enamel, Alkyd, Gloss (for Exterior and Interior Surfaces).
TT-E-496B & Am 2	Enamel, Heat-Resisting (400 Degrees Fahrenheit), Black.
TT-P-28E	Paint, Aluminum, Heat Resisting (1200 Degrees Fahrenheit).
TT-P-645	Primer, Paint, Zinc-Chromate, Alkyd Type.

1.2 Military Specifications:

MIL-P-15328C & Am 1	Primer (Wash), Pretreatment Blue (Formula No. 117-B for Metals).

1.3 American Society for Testing and Materials (ASTM):

B117-73	Salt Spray (Fog) Testing.

2. APPLICATION: This section applies to all sections of Division 15 of this project except as specified otherwise in the individual sections.

3. SUBMITTALS REQUIRED: Shop drawings, manufacturer's data and certificates for equipment, materials, finish, and pertinent details for each system shall be submitted and approved before procurement, fabrication or delivery of such items to the job site. Partial submission are not acceptable and such submittals will be returned without review. Descriptive data shall be annotated to show the specific model, type and size of each item the Contractor proposes to furnish.

3.1 Shop Drawings: The drawings shall be a minimum of 8.5 by 11 inches in size, except as specified otherwise, and shall include plans, elevations, and sections of equipment and control spaces identifying and indicating proposed location, layout, and arrangement of items of equipment, control panels, accessories, piping, ductwork, and any other items that must be shown to assure a coordinated installation. Drawings also shall indicate adequate clearance for operation, maintenance, and replacement of operating equipment devices. If any equipment is disapproved, drawings shall be revised to show acceptable equipment resubmitted.

3.2 Manufacturer's Data: Information shall be submitted for all material and equipment as specified in the individual section that the Contractor proposes to furnish for accomplishment of the contract work. Submittals for each manufactured item shall be manufacturer's descriptive

MANUFACTURER AND PRODUCT	REFERENCE SPECIFICATION
John Doe Company Gate Valve model XYZ	WW-V-54D, Type III, Class A

SIGNATURE AND TITLE

4. OPERATION AND MAINTENANCE MANUAL: An operation and maintenance manual for each mechanical system, except as otherwise specified herein, and for each piece of equipment shall be furnished by the Contractor. Three copies of the manual bound in hardback binders or an approved equivalent shall be provided to the Contracting Officer. One complete manual shall be furnished prior to the time that system or equipment tests are performed, and the remaining manuals shall be furnished before the contract is completed. The following identification shall be inscribed on the cover: the words "OPERATING AND MAINTENANCE MANUAL," the name and location of the building and the name of the Contractor, and the contract number. The manual shall include the names, addresses, and telephone numbers of each subcontractor installing equipment and systems, and of the local representatives for each item of equipment and each system. The manual shall have a table of contents and be assembled to conform to the table of contents with the tab sheets placed before instructions covering the subject. The instruction sheets shall be legible and easily read, with large sheets of drawings folded in. The manual shall include, but not be limited to, the following: a system layout showing piping, valves, and controls; wiring and control diagrams with data to explain detailed operation and control of each component; a control sequence describing start-up, operation and shut-down; a detailed description of the function of each principal component of the system; the procedure for starting; the procedure for operating; shut-down instructions; installation instructions; maintenance and overhaul instructions; lubrication schedule including type, grade, temperature range, and frequency; safety precautions, diagrams, and illustrations; test procedures; performance data; and parts lists. The parts lists for equipment shall indicate the sources of supply, recommended spare parts, and the service organization which is reasonably convenient to the building site. The manual shall be complete in all respects for all equipment, controls, accessories, and associated appurtenances provided.

5. POSTED OPERATING INSTRUCTIONS: Operating instructions approved by the Contracting Officer shall be provided for each system and each principal piece of equipment for the use of operation and maintenance personnel. The operating instructions shall include wiring and control diagrams showing the complete layout of the entire system, including equipment, piping, and valves, and control sequence and shall be framed under glass or in approved laminated plastic and posted where directed by the Contracting Officer; printed or engraved operating instructions for each principal piece of equipment including start up, proper adjustment, operating, lubrication, shut-down, safety precautions, procedure in the event of equipment failure, and any other necessary items of instruction as recommended by the manufacturer of the unit

shall be attached to or posted adjacent to the piece of equipment. Operating instructions exposed to the weather shall be made of weather-resisting materials or shall be suitably enclosed to be weather protected. Operating instructions shall not fade when exposed to sunlight and shall be secured to prevent easy removal or peeling.

6. INSTRUCTION TO GOVERNMENT PERSONNEL: When specified in other sections, the Contractor shall furnish, without additional expense to the Government, the services of competent instructors who will give full instruction to the designated personnel in the adjustment, operation, and maintenance, including pertinent safety requirements, of the equipment or system specified. Each instructor shall be thoroughly familiar with all parts of the installation and shall be trained in operating theory as well as practical operation and maintenance work. Instruction shall be given during the first regular work week after the equipment or system has been accepted and turned over to the Government for regular operation. The number of man-days (eight-hours) of instruction furnished shall be as specified in other sections.

7. DELIVERY AND STORAGE: Equipment and materials shall be properly stored and adequately protected and carefully handled to prevent damage before and during installation. Equipment and materials shall be handled, stored, and protected in accordance with the manufacturer's recommendations and as approved by the Contracting Officer. Damaged or defective items, in the opinion of the Contracting Officer, shall be replaced at no cost to the Government.

8. CATALOGED PRODUCTS: Materials and equipment shall be essentially the cataloged products of manufacturers regularly engaged in production of such materials or equipment and shall be manufacturer's latest standard design that complies with the specification requirements. Materials and equipment shall essentially duplicate items that have been in satisfactory commercial or industrial use at least two years prior to bid opening. Where two units of the same class of equipment are required, these units shall be products of a single manufacturer; however, the component parts of the system need not be the products of the same manufacturer. Each item of equipment shall have the manufacturer's name and address, and the model and serial number on a nameplate securely affixed in a conspicuous place; the nameplate of the distributing agent will not be acceptable.

9. SAFETY REQUIREMENTS: Belts, pulleys, chains, gears, couplings, projecting setscrews, keys, and other rotating parts located so that any person can come in close proximity thereto shall be fully enclosed or properly guarded. High-temperature equipment and piping so located as to endanger personnel or create a fire hazard shall be properly guarded or covered with insulation of a type as specified under another section of this Division.

10. VERIFICATION OF DIMENSIONS: The Contractor shall be responsible for the coordination and proper relation of his work to the building structure and to the work of all trades. The Contractor shall visit the premises and

thoroughly familiarize himself with all dimensions in the field, and to advise the Contracting Officer of any discrepancy before performing any work.

11. MANUFACTURER'S RECOMMENDATIONS: Where installation procedures or any part thereof are required to be in accordance with the recommendations of the manufacturer of the material being installed, printed copies of these recommendations shall be furnished to the Contracting Officer prior to installation. Installation of the item will not be allowed to proceed until the recommendations are received. Failure to furnish these recommendations can be cause for rejection of the material.

12. ELECTRICAL REQUIREMENTS: Electrical components of mechanical equipment, including motors and controllers, control wiring and conduit, shall be furnished with their respective pieces of equipment and shall conform to the requirements of the Division entitled "Electrical". Internal wiring for components of packaged equipment shall be provided as an integral part of the equipment. Extended voltage range motors will not be permitted. Controllers shall have a maximum of 120 volt control holding circuits. When motors and equpiment furnished are larger than sizes indicated, the cost of additional electrical service and related work shall be included under the section that specified that motor or equipment. All interconnecting power wiring and conduit for field installed equipment, and motor control equipment forming part of motor control centers or switchgear assemblies, and conduit and wiring connecting such centers, assemblies or other power sources to mechanical equipment shall be provided under and conform to the requirements of Division entitled "Electrical".

13. PAINTING OF EQUIPMENT: Eqiupment painting, both shop and field applied, shall be as specified herein, and provided under the individual sections of this Division. It is desirable that all paint be shop applied; however, if the manufacturer's standard shop painting system does not meet these requirements, field painting shall be provided.

13.1 Field Painting: Aluminum surfaces shall not be painted. Dirt, rust, oil and grease shall be removed by wire brushing and solvent degreasing prior to application of paint. Paint shall be applied to clean and dry surfaces only. Where more than one coat of paint is specified, the second coat shall be applied after the preceding coat is thoroughly dry. Damaged painting shall be retouched before applying the succeeding coat. Shop coats shall be lightly sanded before application of field applied coats.

13.1.1 Metal Surfaces Subject to Temperatures Less Than 120 Degrees Fahrenheit: Surfaces shall receive: one coat of pretreatment primer conforming to MIL-P-15328 applied to a minimum dry film thickness of 0.3 mil; one coat of primer conforming to TT-P-645 applied to a minimum dry film thickness of 1.0 mil, and two coats of enamel conforming to TT-E-489, applied to a minimum dry film thickness of 1.0 mil per coat.

13.1.2 Metal Surfaces Subject to Temperatures Between 120 and 400 Degrees Fahrenheit: Surfaces shall receive two coats of heat resisting enamel conforming to TT-E-496, Type II, applied to a total minimum dry film thickness of 2 mils.

13.1.3 Metal Surfaces Subject to Temperatures Greater Than 400 Degrees Fahrenheit: Surfaces shall receive two coats of heat resisting aluminum paint conforming to TT-P-28 applied to a total minimum dry film thickness of 2 mils.

13.2 Optional Paint Systems: Manufacturer's standard equipment painting systems may be provided in lieu of the systems specified hereinbefore provided the Contractor submits certification that the painting system applied will withstand 125 hours in a salt-spray fog test, except that equipment located outdoors shall withstand 500 hours in a salt spray fog test. Salt spray fog test shall be in accordance with ASTM B117 using a 20 percent sodium chloride solution. Immediately after completion of the test, the paint shall show no signs of blistering, wrinkling or cracking; no loss of adhesion, and the specimen shall no signs of rust creepage beyond 0.125 inch on either side of the scratch mark. The film thickness of the factory paint system applied on the equipment shall not be less than the film thickness used on the test specimen. If manufacturer's standard painting system is being proposed for use in lieu of specified systems using TT-E-496 or TT-P-28, certifications that the manufacturer's standard system will conform to the heat resistance requirement of TT-E-496 or TT-P-28 as applicable, shall be submitted in addition to other certifications.

---END---

SECTION 15012. SUPPORTS AND SLEEVES

1. APPLICABLE PUBLICATIONS: The following publications of the issues listed below, but referred to thereafter by basic designation only, form a part of this specification to the extent indicated by the reference thereto:

1.1 Federal Specifications:

WW-H-171E	Hangers, and Supports, Pipe.
HH-I-558B (Amd 3)	Insulation, Blocks, Boards, Blankets, Felts, (Sleeving (Pipe and Tube Covering), and Pipe Fitting Coverings, Thermal (Mineral Fiber, Industrial Type).
TT-S-00230C (AMD 2)	Sealing Compound: Elastomeric Type, Single Component (For Calking, Sealing and Glazing in Buildings and Other Structures).

1.2 Manufacturers Standardization Society of the Valves and Fittings Industry (MSS) Publications:

SP-58-1975	Pipe Hangers and Supports - Materials and Design.
"SP-69-1976	Pipe Hangers and Supports - Selection and Application."

2. GENERAL REQUIREMENTS:

2.1 General requirements include those specified in Section: GENERAL REQUIREMENTS, MECHANICAL, and the additional requirements specified below.

2.2 The work includes all supports, hangers, sleeves, plates, flashing for piping throughout the installation.

3. SUBMITTALS:

3.1 Items specified in this section of the specifications and which require submittals for approval are scheduled herein. Submittals and information for Operation and Maintenance Manual shall be in accordance with Section entitled, GENERAL REQUIREMENTS, MECHANICAL.

3.2 Submittals shall consist of manufacturer's literature and shall indicate specification section and paragraph number for which the submittal is intended.

3.3 Manufacturer's Data: Manufacturer's standard drawings or catalog cuts of the following items shall be submitted.

a. Pipe Hangers.

b. Floor, Wall and Ceiling Plates.

4. ANCHORING, GUIDING, AND SUPPORTING OF PIPING:

4.1 All piping.....At the end of the last line change the period to a comma and add "Type 40, and shall be provided on all insulated piping except steam and steam condensate."

4.1 All piping shall be anchored and supported in a manner such that expansion and contraction will take place in the direction desired and vibration and undue strains on equipment will be prevented by use of flexible connections. Hangers used for the support of piping 2-inch nominal pipe size and larger shall be fabricated to permit adequate adjustment after erection while still supporting the load. Wall brackets shall be used where pipes are adjacent to wall or other vertical surfaces which may be used for supports. Supports shall be furnished and installed to carry adequately the weight of the piping system. Insulated piping shall be provided with a pipe covering protection saddle at each support conforming to Section: INSULATION OF MECHANICAL SYSTEMS. Pipe supports shall be spaced to provide adequate support for the pipes, the medium in the pipe, insulation, valves, and fittings. Spacing of supports shall be such as to prevent the forming of pockets. Insulation protection shields shall conform to MSS-SP-58.

4.2 Maximum spacing between supports shall not exceed spans indicated.

4.2.1 All vertical piping shall be restrained by Type 26 clips or Type 24 bolted steel clamps conforming to Fed. Spec. WW-H-171E, spaced not over 10 feet apart.

4.2.2 Maximum spacing between supports for cast iron or acid resistant vertical piping shall be 5 feet.

4.2.3 At or near changes of direction and at concentrated loads, such as flanges, valves, fittings, strainers and similar accessories shall be provided with additional supports.

5. HANGERS:

5.1 Hangers shall be provided for all pipes not buried in ground. Run piping at same elevation where practicable and parallel to building walls generally. Provide minimum clearance of 1/2-inch between pipe and other work. Hangers on different services close together shall be in line and parallel to lines of building. Hanger rods shall be straight and installed vertical. Chain, wire, strap or perforated-bar hangers will not be permitted. Hangers shall not be suspended from piping above.

5.1.1 Horizontal steel piping shall be supported as follows:

Pipe Size	Rod Diameter	Maximum Spacing
Up to 3/4	3/8 In.	5 Ft.
1 to 1-1/4 In.	3/8 In.	7 Ft.
1-1/2 In. & 2 In.	1/2 In.	8 Ft.
2-1/2 In. - 3-1/2 In.	1/2 In.	10 Ft.
4 In. & 5 In.	5/8 In.	15 Ft.
6 In.	3/4 In.	15 Ft.
8 In. thru 12 In.	7/8 In.	18 Ft.
14 In. thru 16 In.	1 In.	24 Ft.
18 In. thru 22 In.	1 In.	26 Ft.

5.1 Hangers.....Immediately preceding the first sentence insert the following: "Selection and application of pipe hangers and supports for provided piping systems shall be in accordance with MSS-SP-69 unless indicated or specified otherwise."

5.3 Hanger types....Delete the second sentence of the lead paragraph in its entirety and substitute the following therefor: "The finish of rods, hangers and supports shall be zinc plated, except hangers used on uninsulated copper piping shall be copper plated. Cast iron rollers, bases and saddles may be painted with two coats of heat resisting aluminum paint in lieu of zinc plating."

5.3.2 Horizontal pipe hangers.....

5.3.2.1 Spring hangers.....Omit the period at the end of the second line and add "shall be installed as indicated."

4 In. 5/8 In. 10 Ft.

5.2 Vertical pipe shall be laterally supported at each floor to provide seismic bracing and to prevent rattling and vibration.

5.3 Hanger types conforming to Fed. Spec. WW-H-171 shall be used. ~~Hangers for use with copper tubing shall be electrolytically coated or compatible non-ferrous metal to prohibit contact of dissimilar metals~~.

5.3.1 Wall brackets shall be of Types 32, 33, and 34, and shall be secured to wall.

5.3.2 Horizontal pipe hangers shall be of Types 1, 2, 3, 4, 5, 6, 7, 9, 10, 11 and 12. Turnbuckles for vertical adjustment, Type 13, 15, 16 or 17, may be omitted where limited space prevents use.

5.3.2.1 Spring hangers shall be Type 51, or type 57 Variable Spring Hanger.

5.3.3 Vertical pipe hangers shall be Riser Clamp Type 8 for floor supports and Type 24 U-bolt clamp for restraint at other locations.

5.3.4 Trapeze hangers may be used for groups of pipes 6 inches in size and smaller close together and parallel. However, chemical waste drain pipe must, each, be supported independently from other services. Pipe lines must be held on specific centers by Type 24 U-bolts or Type 26 clips.

5.3.4.1 All pipes 8 inches and larger shall be supported on individual hangers attached to the structural steel framework of the facility wherever possible.

"5.3.4.2x Provide roller supports, including U-bolt restraints on steam and steam condensate piping. Roller supports shall conform to Types 40 through Type 48 inclusive for sizes of pipe supported. Suspended steam and steam condensate shall have insulation protection saddles Type 40A and 40B."

5.4 In areas of concrete construction the use of expansion type concrete fasteners are permitted for the purpose of supporting pipe. Maximum hanger spacing shall not exceed eight feet. On pipe eight inch and larger double drop rod hanger types shall be used.

6.2 Sleeves.....In the second line, immediately following the word "be", insert "Schedule 80". RFP #32

PROVIDE SCH. 40 GAL. PIPE SLEEVES IN LIEU OF SCH. 80 THROUGHOUT.

6. PIPE SLEEVES: Pipe sleeves shall be provided where pipes and tubing pass through walls, floors, roofs, and partitions.

6.1 Sleeves will not be allowed through beams unless specifically noted on drawings. Any deviation from this requirement must receive prior approval of Contracting Officer.

6.2 Sleeves in outside walls below and above grade, in floor, or in roof slabs, shall be zinc-coated steel pipe.

6.3 Sleeves in partitions shall be zinc-coated sheet steel having a nominal weight of not less than 0.906 pound per square foot.

6.4 Sleeves shall be held securely in proper position and location before and during construction.

6.5 All sleeves shall be of sufficient length to pass through entire thickness of walls, partitions or slabs. Sleeves in floor slabs shall extend 2-inches above the finished floor. Sleeves locoated in water-proofed construction shall be provided with flange and clamping ring.

6.6 Clearances: A minimum clearance of 1/2-inch all around between bare pipe or insulation and sleeves shall be provided. Diameters of I.P.S. pipe sleeves shall be smallest stock size of pipe to provide required clearance.

6.7 Sleeves Sealing: All sleeves for pipes penetrating floors and walls shall be sealed.

6.7.1 Interior walls and floors shall be sealed in conformance with specification Section entitled, CEILING AND WALL INSULATION.

6.7.2 Exterior wall sleeves shall be packed with insulation conforming to Fed. Spec. HH-I-558B, Form A, Class 1 and having an ASTM fire class E-84 with fiber melt point in excess of 2000°F, throughout the void space between pipe and/or insulation to a point 1/4" from end of the sleeve. After void is packed, balance of space shall be filled with a non-hardening silicone conforming to Fed. Spec. Tt-S-00230.

7. PLATES:

7.1 Floor, wall, and ceiling plates shall be installed on pipes passing through floors, walls, and ceilings in exposed locations except in pipe chases and pipe closets.

7.2 Plates shall be one piece or split type provided with set screw for securely fastening to pipe or sleeve. Plates on brass pipe and copper tubing shall be polished brass chromium plated; plates on ferrous metal pipe shall be cast iron or steel chromium plated. Set floor plates on high sleeves flush with floor and cover entire projection of sleeve.

7.3 Thickness: Plates shall be not less than 3/32-inch thick.

---END---

SECTION 15160. INSULATION OF MECHANICAL SYSTEMS

1. APPLICABLE PUBLICATIONS: The following publications of the issues listed below, but referred to thereafter by basic designation only, form a part of this specification to the extent indicated by the references thereto.

1.1 Federal Specifications:

L-P-535D	Plastic Sheet (Sheeting); Plastic Strip; Vinyl Chloride Polymer And Vinyl Chloride-vinyl Acetate Copolymer, Rigid
HH-I-523C	Insulation Block And Pipe Covering Thermal (Calcium Silicate, For Temperatures Up To 1200°F)
HH-I-551E	Insulation Block, Pipe Covering, And Boards, Thermal (Cellular Glass)
HH-I-558B (AMD 3)	Insulation, Blocks, Boards, Blankets, Felts, Sleeving (Pipe And Tube Covering), And Pipe Fitting Coverings, Thermal (Mineral Fiber, Industrial Type)
HH-I-573B (Int Amd 1)	Insulation, Thermal, (Flexible Unicellular Sheet And Pipe Covering)
HH-I-1030A (Int Amd 1)	Insulation, Thermal (Mineral Fiber, For Pneumatic Or Poured Application)
SS-C-160A (Int Amd 1)	Cement, Insulation, Thermal
WW-H-171E	Hangers, And Supports, Pipe

1.2 American Society for Testing and Materials (ASTM), Specifications:

B209-77	Aluminum-Alloy Sheet and Plate, Test for
D774-67	Bursting Strengh of Paper, Test for
D781-68	Puncture and Stiffness of Paperboard, Corrugated and solid Fiberboard, Test for
D828-60	Tensile Breaking Strength of Paper and Paperboard, Test for
E-84-77	Surface Burning Characteristics of Building Materials, Test for
E96-66	Water Vapor Transmission of Materials in Sheet Form, Tests for

1.3 Military Specifications (MIL):

MIL-A-3316B (Amd 2)	Adhesives, Fire-Resistant, Thermal Insulation
MIL-B-19564A	Bedding Compound, Thermal Insulation Pipe Covering
MIL-C-1956D	Coating Compounds, Thermal Insulation Pipe Covering Fire and Water Resistant, Vapor Barrier and Weather Resistant
MIL-C-20079E	Cloth, Glass, Tape, Textiles, Glass and Thread, Glass
MIL-I-2781E	Insulation, Pipe, Thermal
MIL-I-2819F	Insulation, Block, Thermal

MIL-C-82052 Coating Compound, Waterproofing, Mineral-Filled Solvent Type, Asphalt Base.

1.4 National Fire Protection Association:

NFPA No. 255-1972 Method of Test of Surface Burning Characteristics of Building Materials

1.5 National Building Code:

1976 Edition

1.6 Underwriters' Laboratories, (U.L.):

No. 723-73 Fire Hazard Classification of Building Materials, Test Method for

2. MATERIALS:

2.1 Limitations: Materials specified shall be applied subject to their temperature limits. Any methods of applications of insulating materials or finishes not specified in detail herein shall be in accordance with manufacturer's published recommendations.

2.1.1 Low pressure steam shall be 212°F to 295°F.

2.1.2 Medium pressure steam shall be 296°F to 320°F.

2.1.3 High pressure steam shall be 321°F to 353°F.

2.2 Fire Resistance: Insulation adhesives, vapor-barrier materials, and other accessories shall be noncombustible as defined in Section 200 of National Building Code; shall have a flame-spread rating of not more than 25 and a smoke developed rating of not more than 50. Flame Spread and Smoke Developed Rating shall be determined by Method of Test of Surface Burning Characteristics of Building Materials, NFPA No. 255, ASTM E84, Underwriters' Laboratories, Inc. Building Materials List under heading "Hazard Classification (Fire)," or tested by approved testing laboratory in accordance with UL criteria.

2.2.1 Materials that are factory applied shall be tested as assembled. Materials that are field applied may be tested individually. No fugitive or corrosive treatments shall be employed to impart flame resistance. Underwriters' Laboratories, Inc., label or listing, satisfactory test results from National Bureau of Standards, or satisfactory certified test report from an approved testing laboratory will be required to indicate that fire hazard ratings for materials proposed for use do not exceed those specified. Flameproofing treatments subject to deterioration due to effect of moisture or high humidity, are not acceptable.

2.3.1.3 Cold Piping and Ductwork.....In the first line change "Cold" to "Low Temperature".

2.2.2 The following materials are exempt from Fire Resistant Rating:

2.2.2.1 Flexible unicellular insulation.

2.2.2.2 Nylon anchors for securing insulation to ducts and equipment.

2.2.2.3 Treated wood inserts used between shields and piping at hangers on low-temperature piping.

2.2.2.4 Factory premolded one piece PVC fitting and valve covers.

2.3 Insulation Jacket:

2.3.1 Vapor Barrier Jacket:

2.3.1.1 General: Vapor barrier jacket shall be permanent resistant to flame and passage of moisture vapor and shall not support mold growth. Pipe and duct jackets shall be factory applied.

2.3.1.2 Low Temperature Piping ($-30^{\circ}F$ to $+32^{\circ}F$): Perm rating not more than .02, ASTM E96 Procedure A; Puncture resistance not less than 50 Beach units; ASTM D781; Tensile strength not less than 35 lb/in width, ASTM D828.

2.3.1.3 Cold Piping and Ductwork ($32^{\circ}F$ to $60^{\circ}F$): Perm rating not more than .05 ASTM E96, Procedure A; Puncture resistance not less than 50 Beach units , ASTM D781; Tensile strength not less than 20 lb/in width, ASTM D828.

2.3.1.4 Hot Piping (Above $60^{\circ}F$): Same as cold piping and ductwork except perm rating shall not exceed 0.3, ASTM E96, Procedure A.

2.3.2 Presized glass cloth jacket with or without integral vapor barrier as required. Perm rating when required shall be as specified for vapor barrier jacket for the applicable service; Puncture resistance not less than 100 Beach units, ASTM D781; Bursting Strength not less than 200 psi, ASTM D774; shall not support mold growth; shall be factory applied on pipe and duct insulation.

2.3.3 Metal jackets shall be provided with integral moisture barrier except that moisture barrier is not required when metal jacket is applied over vapor barrier.

2.3.3.1 Aluminum jacket; corrugated, embossed, or smooth; 0.016 inch nominal thickness; ASTM B209 temper H14.

2.3.3.2 Stainless steel corrugated, smooth or embossed; 0.010 inch nominal thickness.

2.3.4 All-purpose jacket for use in exposed and concealed work: Perm rating not more than .02, ASTM E96: puncture resistance not less than 50 Beach units, ASTM D781; tensile strength not less than 35 lbs/in. width, ASTM

2.3.1.4 Hot Piping.....In the first line change "Hot Piping" to "Medium and High Temperature Piping and Ductwork".

D828. The all-purpose jacket shall not support mold growth and shall be factory applied on pipe, equipment, and duct insulation. The finish shall be glass scrim reinforced white vinyl.

2.4 Adhesives, Coatings, Sealing Compounds and Protective Finishes: Shall be compatible with materials to which they are applied, and shall not corrode, soften, or otherwise attach such material in either wet or dry state, and shall be suitable for temperature application and service.

2.4.1 Lap Adhesive for Vapor Barrier Jackets - Mil. Spec. MIL-A-3316, Class 2.

2.4.2 Bonding Adhesives for securing insulation to metal surfaces - Mil. Spec. MIL-A-3316, Class 2.

2.4.3 Bedding Compound and Joint Sealers - Mil. Spec. MIL-B-19564.

2.4.4 Coating Compound - Vapor Barrier Treatment - Mil. Spec. MIL-C-1956, Type I or II.

2.4.5 Coating Compound for protective finish outside of buildings - Mil. Spec. MIL-C-1956, Type I.

2.4.6 Vapor Barrier Coating shall be white in color where exposed to view.

2.4.7 Lagging Adhesives: MIL-A-3316, Class 1.

2.4.8 Insulation Cement: SS-C-160, except that asbestos types shall not be permitted.

2.4.9 Asphaltic Mastic: MIL-C-82052 for protective finish on underground piping.

2.5 Submittals:

2.5.1 Submittals Required: Shop drawings, manufacturer's data and certificates for equipment, materials, finish, and pertinent details for each system shall be submitted and approved before procurement, fabrication or delivery of such items to the job site. Partial submission will not be acceptable. Descriptive data shall be annotated to show the specific model, type and size of each item the Contractor proposes to furnish. The submittal requirements of section entitled "General Requirements, Mechanical", applies to the following lists. Items in the following lists (which are followed by (CO) shall be approved by the Contracting Officer.

2.5.1.1 Manufacturer's Data:

(a) Insulation (CO)
(b) adhesive (CO)

"3.1.1x Chilled Water, Hot Water, Domestic Cold Water, Domestic Hot Water, Drain Piping from Drain Pans: Rigid phenolic foam pipe insulation, minimum density of 2 pounds per cubic foot, with a factory applied vapor barrier jacket may be used in lieu of fibrous glass pipe insulation when pipe surface temperatures do not exceed 250 degrees Fahrenheit; and shall have a flame spread rating not to exceed 25, and a smoke developed rating not to exceed 50, as tested by the ASTM E84 method."

3.1.2 Insulation thickness.....At the end of the last line delete "table." and substitute "tables II, IV." therefor.

3.1.3 Insulation for concealed ducts.....In the third line change "1-1/2 inches" to "2 inches". Omit the period at the end of the second sentence and add "and on circular and oval ducts." FLIP

(d) Mastic
(e) Accessories

2.5.3 Every package or standard container of insulation, jackets, cements, adhesives and coatings delivered at the building site for use must have a manufacturer's stamp or label attached giving name of manufacturer, brand and description of material.

2.6 Sound Attenuator: As specified in Section entitled, Air Supply Systems.

2.7 Supply S 2.7 Fiberous Glass Ductwork: Delete this paragraph in its entirety.

2.8 Sound Absorbing Duct Lining: As specified in Section entitled, Air Supply Systems.

2.9 Chilled Water and Hot Water Distribution System: As specified in Section entitled "Hot Water Heating and Chilled Water Cooling Systems".

2.10 Underground Steam: As specified in Section entitled "Steam Distribution System".

3. APPLICATION: See TABLE I, II, III and IV.

3.1 Supplementary Information for TABLE I, II, III and IV.

3.1.1 Flexible unicellular insulation thickness shall be 1/2 inch, no jacket required. Use of unicellular insulation shall be restricted to runouts serving individual terminal units, not to exceed 12 feet in length, piping on packaged equipment and piping exterior to a building.

3.1.2 Insulation thickness for equipment and associated piping located outdoors exposed to weather shall be one inch greater than shown on table.

3.1.3 Insulation for concealed ducts and equipment for air heating and air conditioning systems may be mineral fiber, flexible insulation of 1-pound density, 1-1/2 inches thick; or 3/4-pound density, 2 inches thick. Flexible

insulation shall be used in concealed spaces only. Where duct work is exposed, board shall be nominal one inch thick 3 lb/cu. ft. density.

3.1.4 The use of calcium silicate on aluminum or stainless steel will not be allowed.

3.2 Vapor Barrier.

3.2.1 Vapor Barrier is required when air or water temperature in duct and piping is below 60°F.

3.3 Application Areas:

3.3.1 Insulation for Hot Pipe: The following piping, fittings, flanges and valves shall be insulated except that unions and flanges on piping handling steam to 15 psi and other piping to 250°F more thansix feet above floor shall not be insulated.

3.3.1.1 Boiler feedwater, blowdown, blowoff

3.3.1.2 Condensate pump discharge

3.3.1.3 Condensate and drip except cooling legs to traps

3.3.1.4 Diesel engine coolant water piping

3.3.1.5 Domestic hot water supply and hot water return

3.3.1.6 Heated oil supply and recirculating piping

3.3.1.7 Heating hot water supply and hot water return

3.3.1.8 Refrigerant hot gas and liquid lines, and condensing water piping exposed in air conditioned or refrigerated spaces shall be covered as required for hot water heating piping.

3.3.1.9 Steam supply and steam condensate return piping.

3.3.1.10 Solar collector supply and return

3.3.2 Insulation for Hot Equipment: The following heating equipment shall be insulated:

3.3.2.1 Boiler breaching

3.3.2.2 Condensate tanks

3.3.2.3 Convectors

3.3.2.4 Domestic hot water tanks and heaters

3.3.1 Insulation for Hot Pipe: In the title of this paragraph change the word "Hot" to "Medium and High Temperature". In the third line, immediately following "15 psi and" insert "unions and flanges on".

3.3.2 Insulation for Hot Equipment: In the title of this paragraph change the word "Hot" to "Medium and High Temperature".

3.3.2.5 Feedwater heaters

3.3.2.6 Flash tanks

3.3.2.7 Pumps

3.3.2.8 Diesel Engine Exhaust: Cover completely from engine through roof or wall construction, including muffler and catalytic unit. Insulation shall be suitable for 1200°F.

3.3.2.9 Solar storage tanks

3.3.2.10 Heat exchangers

3.3.3 Insulation for Low Temperature Pipe: The following equipment, piping, fittings, flanges, unions and valves, shall be insulated.

3.3.3.1 Chilled water

3.3.3.2 Condensate drain lines

3.3.3.3 Domestic cold water, service cold water, and treated cold water.

3.3.3.4 Evaporator shell and water boxes and headers

3.3.3.5 Horizontal runs and offsets, including elbows, of interior downspout piping in all areas above pipe basement.

3.3.3.6 Chilled water, drinking fountains.

3.3.3.7 Refrigerant suction

3.3.3.8 Waste piping from chilled water drinking fountains and electric water coolers from unit to drainage system.

3.3.3.9 Waste piping located above basement floor from ice making and development equipment, from fixture (including trap) to main vertical waste pipe.

3.3.3.10 Where motors are the gas-cooled type, insulation shall be provided on the cold-gas inlet connection to the motor.

3.3.3.11 Water boxes or headers of the chiller shall be so insulated as to provide easy removal of the heads for inspection and repair.

3.3.4 Insulation for Cold Equipment: The following air conditioning and refrigeration equipment shall be insulated:

3.3.4.1 Chilled water pumps or provide insulated drain pans

3.3.4 Insulation for Cold Equipment: In the title of this paragraph change the word "Cold" to "Low Temperature".

3.3.4.2 Chilled water storage tanks

3.3.4.3 Refrigerant intercoolers and manifold subject to condensation

3.3.4.4 Water chillers:

3.3.4.4.1 Water boxes or headers shall be so insulated as to provide easy removal of the heads for inspection and repair.

3.3.4.4.2 Where motors are gas-cooled type, provide insulation on cold-gas inlet connection to motor.

3.3.4.4.3 Refrigerant intercoolers and manifold subject to condensation

3.3.5 External Insulation for Ducts, Plenums and Casings (Heating, Ventilating and Air Conditioning Systems):

3.3.5.1 External insulation shall be provided on all supply and return ducts for heating and air conditioning systems except where indicated on the drawings and/or specified under this section of the specifications. Also, outside air intake duct, flexible run-outs, plenums, casings, coils, fan and portion of air terminal located in un-conditioned and unheated space shall be insulated. Un-conditioned and un-heated spaces shall be defined as those spaces not directly supplied with heated or conditioned air, or not provided with a heating or cooling device such as a fan-coil unit.

3.3.5.2 External insulation is not required for the following:

3.3.5.2.1 Fibrous glass ductwork

3.3.5.2.2 Ducts, casings and air handling units where internal insulation or sound absorbing linings are specified under other sections of specifications; factory prefabricated sound absorbers shall be insulated.

3.3.5.2.3 Fan name plates, access plates in fan housings and ducts and the like for ventilating and air heating systems, but insulation must be carefully beveled and sealed around same.

3.3.5.2.4 Factory pre-insulated flexible ductwork specified under other sections or specifications.

3.3.5.2.5 Mixing boxes, filter boxes, and combination filter "(I)" boxes.

3.3.5.2.6 Air conditioning and heating supply and return ducts located in heated or air conditioned spaces unless otherwise shown on the drawings. Air conditioned and heated spaces shall be defined as those spaces directly supplied with heated or conditioned air or provided with a heating or cooling device such as a fan coil unit.

3.3.5 External Insulation.....

3.3.5.2 External insulation.....

3.3.5.2.1 Fibrous glass ductwork. Delete this subparagraph.

3.3.5.2.7 Air conditioning and heating return ducts in ceiling spaces between occupied floors of a building.

3.3.5.3 Exhaust air ducts shall not be insulated except:

3.3.5.3.1 Exhaust ductwork for ovens, griddles, deepfat fryers, steam kettles, vegetable steamers, high pressure cookers, mobile serving units, concealed above kitchen ceiling and throughout building, shall be insulated with a minimum thickness of 2 inch blocks or boards, either Mineral Fiber, Fed. Spec. HH-I-558, Form A, class 5, or Calcium Silicate, Fed. Spec. HH-I-523, Type I. Insulation shall be installed with 3/4 inch wide, 0.015 inch thick galvanized steel wire or 16 gage galvanized steel bands with corner clips under wire or bands spaced not over 12 inches on center or with heavy welded pins spaced not over 12 inches apart each way. Adhesives shall not be used.

3.4 Insulation Finishes:

3.4.1 Pipe and Fittings Insulation:

3.4.1.1 Exposed Buildings:

"3.4.1.1.1x "Exposed In Buildings" is defined as areas where piping, ducts and equipment are exposed to view of the public and routine maintenance personnel."

3.4.1.1.2 Pipe insulation shall be provided with factory applied all-purpose jacket or pre-sized glass cloth with or without integral vapor barrier as required by the service.

3.4.1.1.3 Fittings, flanges, and valves (except valve stems, hand wheels and operators) shall be insulated with premolded, precut or job fabricated insulation of equivalent thickness and of same composition as insulation used on adjacent piping. Finish outer surfaces of insulation as follows:

3.4.1.1.3.1 For temperature of $0^{\circ}F$ and above, apply a minimum wet film thickness of 1/16 inch coating of vapor barrier compound, Mil. Spec. MIL-C-1956, Type I or II. Embed a single layer of open weave glass fabric, Mil.Spec. MIL-C-20079, Type I or II, 20 x 20 mesh into wet coat. Fabric shall be drawn smooth and tight with a 2 inch overlap at all joints. When first coat is dry,apply a final coat of vapor barrier compound, Mil. Spec. MIL-C-1956, Type I or II of 1/16 inch minimum wet film thickness. For temperatures above $35^{\circ}F$, one-piece premolded fitting and valve covers made of polyvinyl chloride (PVC) in accordance with Fed. Spec. L-P-535, Composition A, type II with precut insulation insert conforming to Fed. Spec. HH-I-558, Form B, Type I, Class 6, may be used. Covers shall overlap adjoining pipe covering and vapor barrier jackets. The use of PVC fitting covers shall be limited to $35^{\circ}F$ medium temperatures and below $150^{\circ}F$ ambient temperatures.

3.4.1.1.3.2 For temperature below $0^{\circ}F$, surfaces shall be wrapped with pressure sensitive vinyl plastic tape with a vapor permeability of not over

3.4.1 Pipe and Fittings Insulation:

3.4.1.1 Exposed Buildings: Immediately following the word "Exposed" insert "in".

3.4.1.3 Concealed.....In the first line change "Concealed in buildings, crawl spaces," to "Not Exposed In Buildings, such as crawl spaces,".

3.4.1.4 Underground.....In the first line, immediately following "installed in" insert "indicated".

0.05 perms. Tape shall overlap 1/2 inch on each wrap and shall extend at least 2 inches over jacket of adjacent pipe insulation. Over tape, apply two coats of vapor barrier compound, Mil. Spec. MIL-C-1956, Type I or II with each coat applied to a minimum wet film thickness of 1/16 inch, and with a single layer of glass fabric, Mil. Spec. MIL-C-20079, Type I or II, 20 x 20 mesh, embedded between two coats.

3.4.1.1.3.3 Insulation and sealing shall be as recommended by manufacturer.

3.4.1.2 Exposed to weather or where shown on drawings:

3.4.1.2.1 Pipe insulation shall be finished with .016 inch thick aluminum or .010 inch stainless steel jacketing with moisture barrier lining unless surface of insulation to which it is applied is provided with a vapor barrier jacket. Side and end laps shall be at least 2 inches wide and cut edge of each side lap shall be turned under one inch to provide a smooth edge. Laps shall be placed to shed water and sealed with weatherproof coating. Jackets shall be secured in place with aluminum or stainless steel bands on 9 inch centers or aluminum or stainless steel screws on 5 inch centers. Pipe insulation furnished with factory aluminum or stainless steel jackets of equal thickness, proper longitudinal slip joint, and butt straps may be used. Unicellular insulation shall be coated with two coats of vinyl lacquer finish to protect it from deterioration.

3.4.1.2.2 Elbows and curved piping shall be finished with factory fabricated metal covers. Tees, flanges and valves shall be finished with job fabricated metal covers. All covers shall be same thickness and material as jackets on adjacent piping. Metal covers shall be secure in place with metal bands and sealed with a weatherproof coating. Fittings, flanges and valves on cold pipe shall be finished as required for piping exposed in buildings prior to any other finish. All fittings, flanges and valves shall be protected with a weatherproof coating prior to installation of metal covers.

3.4.1.3 Concealed in buildings, crawl spaces, pipe basements, tunnels and trenches:

3.4.1.3.1 All pipe shall be finished for protection and shall have factory applied vapor barrier jacket for all services. Fittings shall be finished for cold pipe to provide a vapor barrier.

3.4.1.4 Underground insulated piping not installed in Class A Conduit System.

3.4.1.4.1 All pipe and fittings shall be insulated with cellular glass. Finish shall be two layers of asphalt impregnated glass fabric (10 x 10 mesh) sandwiched between three layers of asphaltic mastic.

3.4.2 Duct and Equipment:

3.4.2.1.1 No additional finish.....In the second line change "cloth or all-purpose jacket" to "cloth, all-purpose jacket or aluminum foil glass fiber Kraft paper jacket".

3.4.2.3 Concealed in buildings,.....In the first line change "Concealed in buildings, crawl spaces," to "Not Exposed In Buildings, such as crawl spaces,".

be applied.

3.4.2.1.2 Presized glass cloth shall be used for irregular surfaces.

3.4.2.2 Exposed to Weather:

3.4.2.2.1 Plenums, casings, fans, rectangular ducts and equipment insulation shall be finished with two coats of weatherproof coating conforming to Mil. Spec. MIL-C-1956, each troweled or sprayed in place to a wet thickness of 1/4 inch, reinforced with open-weave glass cloth. After second layer of mastic has dried, coat and seal with a layer of asphalt aluminum sealer brushed in place.

3.4.2.3 Concealed in buildings, crawl spaces, tunnels and trenches: No additional finish is required.

4. INSTALLATIONS:

4.1 General:

4.1.1 Insulation material shall be installed in a first class manner with smooth and even surfaces, with jackets drawn tight and smoothly cemented down on all longitudinal and end laps. Scrap pieces of insulation shall not be used where a full length section will fit.

4.1.2 Insulation materials shall not be applied until all surfaces to be covered are tested for leaks, cleaned and dried, and all foreign material, such as rust, scale, dirt, etc., has been removed. Insulation shall be clean and dry when installed and during the application of any finish.

4.1.3 Insulated piping shall be supported by hangers and metal protection shields to be installed with piping. For piping 2 inches and larger, where pipe insulation is of less than 9-pound density, provide a 12 inch long insert, consisting of a piece of mineral fiber material with a density of 9 pounds or more, cork, or treated wood block, placed between shield and piping. Insert shall be molded or shaped to fit not less than half pipe circumference. Inserts shall be of same thickness and outside contour as adjoining insulation, and shall be sealed into it with coating compound, Mil. Spec. MIL-C-1956 and covered with vapor barrier jacket, Type I. Use of protection saddles prefabricated to include insert material and vapor barrier jacket will also be permitted.

4.1.4 Where anchors are secured to piping to be insulated, anchors shall be insulated, same as piping for a distance not less than four times

insulation thickness, to prevent condensation. Insulation shall be vapor sealed as previously specified for fittings insulation.

4.1.5 Insulation shall be neatly finished at pipe and duct hangers.

4.1.6 Pipe and duct insulation shall be continuous through hangers, sleeves, wall and ceiling openings, except at fire dampers in duct systems.

4.1.7 Piping and ductwork shall be individually insulated.

4.1.8 Where plumbing pipes are located in wall chases and space does not permit installation of sectional insulation, when approved by the Contracting Officer, pipes may have insulation omitted, provided chases are packed full of mineral fiber or rock wool.

4.1.9 Provide a complete moisture and vapor seal wherever insulation terminates against metal hangers, anchors and other projections through insulation on cold surfaces for which a vapor seal is specified. All joints, breakers, punctures and voids shall be filled with vapor barrier compound and covered with vapor seal material identical to that surrounding. Ends of pipe insulation shall be sealed off with vapor barrier coating at valves, flanges, and fittings and on long runs of pipe at intervals not to exceed 15 feet.

4.1.10 Omit insulation on pipes used solely for fire protection, except when indicated, and omit insulation on chrome plated pipes.

4.1.11 Omit insulation from vibration isolating connections, but adjacent insulation shall be neatly terminated and beveled.

4.1.12 Bevel insulation around nameplates, ASME stamps, and access plates in fan housings and ducts.

4.1.13 Insulation on pumps and equipment that must be opened periodically for inspection, cleaning and repair must be constructed so insulation can be removed and replaced without damage. Insulation on pumps to be covered with box shaped insulation of thickness specified. Boxes shall be fitted around pump and split to coincide with split in pump casings.

4.1.14 Welded Anchors for Insulation:

4.1.14.1 Where anchors or pins are welded to ducts, plenums or casings, use a welding procedure which will not distort sheet metal or burn through, or mar interior finish of duct, plenum or casings, but which will develop full strench of anchor. Anchor and pin sizes and diameters shall be as recommended by manufacturer for type and thickness of insulation specified.

4.2 Piping:

4.2.1 Pipe insulation shall be installed with all joints tightly butted. Longitudinal jacket laps shall overlap not less than 1-1/2 inches. Butt

joints shall be wrapped with butt strips not less than 3 inches wide of identical material to jacket. Jacket laps and both butt strips shall be cemented with adhesive conforming to Mil. Spec. MIL-A-3316, Class 2, or with factory applied self sealing system and additionaly secured with flared staples on 4 inch centers. Staples may be omitted when factory applied self sealing system is used unless fishmouths develop. Staples shall be stainless steel, outside clinched without complete penetration of insulation. For cold pipe where vapor barrier jacketing is pierced or punctured by staples or by any other means, it shall be brush coated with vapor barrier coating to provide a vapor tight covering. For concealed hot piping, adhesive is not required when staples are used.

4.2.2 Fitting, Flanges and Valve Insulation:

4.2.2.1 Where molded or mitered fitting covers are used they shall be joined with adhesive conforming to Mil. Spec. MIL-A-3316, Class 2 or wired in place. Where wire is used, a smoothing coat of finishing cement shall be provided.

4.3 Heating Equipment: Secure block insulation with No. 16 gage, galvanized steel or copper weld wire or 3/4 inch wide, 0.015 inch thick galvanized bands, each spaced on 12 inch centers. Miter or score block to insure tight joints. Seal joints with insulating cement and cover insulation with coat of finishing cement. Provide 3/4 inch rib expanded metal over equipment with standing ribs or seams prior to applying insulation to eliminate ribs or seams penetrating through insulation.

4.4 Cold Equipment: Secure block insulation with No. 16 gage, galvanized steel or copper clad wire or 3/4 inch wide, 0.015 inch thick galvanized bands each spaced on 12 inch centers. Miter or score block to insure tight joints. Seal joints with vapor barrier cement. On irregular surfaces, cover with a smoothing coat of insulating cement. Provide chillers with removable 20 gage galvanized metal headcover, internally insulated.

4.5 Ducts, Plenums and Casings:

4.5.1 Secure rigid insulation to duct by impaling over pins or anchors located not more than 3 inches from edge of boards and spaced not more than 12 inches on center and secured with washers and clips. Pins or anchors shall be metal spot welded to duct surface by special purpose process or shall be metal or nylon, attached to duct surface with waterproof adhesive especially designed for attachment to metal surfaces. Apply insulation with all joints tightly butted where vapor barrier is specified, all joints, breaks, punctures and voids shall be filled with vapor barrier coating compound and covered with vapor seal material identical to that surrounding.

4.5.2 Flexible (blanket) duct insultion shall be tightly and smoothly applied to the duct. All joints of insulation shall be tightly butted. Insulation shall be secured to duct with a fire resistant, waterproof bonding adhesive applied in 4 inch wide strips on 12 inch centers. Flexible

insulation on bottom of rectangular horizontal and sloping ducts more than 24 inches wide shall, in addition to adhesive, be secured by impaling over pins or anchors as specifed for rigid insulation. Sagging of flexible duct insulation will not be permitted.

4.5.3 Vapor Barrier: At all joints, the vapor barrier jacket for rigid insulation and flexible (blanket) insulation shall be covered with 4 inch wide pressure sensitive vapor-seal tape or strips of material identical to jackets, or shall have 2 inch wide laps drawn tight and secured with vapor-seal adhesive. The tape or laps shall be secured with flared staples, spaced 4 inches on centers, and 1 inch from edges of tape or laps. The joints and all openings where the facing is pierced or punctured by pins, staples or by any other means shall be brush coated with 2 inch wide strips of vapor barrier coating compound to provide a vapor tight covering.

4.6 Diesel Engine Exhaust: Cover completely from engine through roof or wall construction, including muffler and catalytic unit. Insulation shall be suitable for 1200°F.

4.7 Boiler Breeching:

4.7.1 General: Breeching shall be insulated with not less than 2 inches of mineral fiber or calcium silicate insulation. Provide 3/4 inch rib expanded metal over equipment with standing ribs or seams prior to applying insulation to eliminate ribs or seams penetrating through insulation. Insulation may be either block or blanket type. Joints in the block insulation shall be filled with mineral wool, or other equally suitable cement. Block insulation for use on equipment operating at temperatures above 600°F shall be applied in double layer construction with staggered joints.

4.7.2 Inside Boiler House: Change the word "House" to "Room".

4.7.2 Inside Boiler House:

4.7.2.1 Insulation shall be covered with presized glass cloth smoothly adhered with lagging adhesive. Cleanout and access doors and identification plates shall not be insulated, but insulation and external plaster shall be neatly beveled to edges of such openings and stopped with sheet-steel rings.

4.7.2.2 A skim coat of hydraulic setting cement shall be applied directly to insulation. A flooding coat of adhesive conforming to Mil. Spec. MIL-A-3316, class 2, shall be applied over the hydraulic setting cement into which, while still wet, a layer of glass cloth or tape conforming to Mil. Spec. MIL-C-20079, Type I or II, shall be applied and sealed at laps with adhesive cut at a ratio of one part water to five parts adhesive in color other than white for the purpose of visual inspection to insure sizing of entire surface. When dry, a finish coat of the specified adhesive at can consistency shall be applied.

TABLE I. INSULATION MATERIALS FOR PIPING

Wherever it occurs delete "Flexible Unicellular HH-I-573 (See Notes 1 & 2)". In the sixth line under the "SERVICE" column delete "& Dual Temp.". In line that reads "Piping, Plumbing, Cellular Glass HH-I-551 II", under the "CLASS" column insert "4". Delete all the notes at the bottom of Page No. 15.

TABLE II. PIPING INSULATION THICKNESS

Wherever it occurs delete "Flexible Unicellular (See Notes 1 & 2)". In the "SERVICE" column change "0° 0 34°F" to "0° - 34°F". Delete all the notes on Page No. 17.

& Dual Temp. Piping, Plumbing							
Medium Temp. Piping, Plumbing, Heating (101°F to 200°F)	Mineral Fiber	HH-I-558	D	III		12	
	Cellular Glass	HH-I-551		II			
	Flexible Unicellular	HH-I-573 (See Notes 1 & 2)					1
	Calcium Silicate	HH-I-523		II			
	Thermal Pipe	MIL-I-2781			I	b	
High Temp. Piping (370°F Max.)	Mineral Fiber	HH-I-558	D	III		12	
High Temp. Piping (600°F Max.)	Thermal Pipe	MIL-I-2781			I	b	
High Temp. Piping (750°F Max.)	Thermal Pipe	MIL-I-2781			II	c,d	
High Temp. Piping (800°F Max.)	Cellular Glass	HH-I-551		II			
High Temp. Piping (1000°F Max.)	Mineral Fiber	HH-I-558	D	III		13	
High Temp. Piping (1200°F Max.)	Calcium Silicate	HH-I-523		II			
	Thermal Pipe	MIL-I-2781		I, II	III	e	
	Thermal Pipe	MIL-I-2781			III	f	

NOTES:
1. Flexible unicellular thickness shall be 1/2 inch.
2. Use of unicellular insulation shall be restricted to branch piping serving individual terminal units not to exceed 12 feet in length, piping on packaged equipment, and piping exterior to a building.

TABLE II. PIPING INSULATION THICKNESS

SERVICE	MATERIAL	PIPE SIZE (Inches) 1/4 to 1-1/4	1-1/2 to 3	3-1/2 to 5	6 to 10	12 to 24	to 36
Low Temp. -1°F - 30°F	Mineral Fiber	2	2-1/2	3	3	3	3
	Cellular Glass	2-1/2	3	3-1/2	3-1/2	3-1/2	3-1/2
	Flexible Unicellular	(See Notes 1 & 2)					
0° 0 34°F	Mineral Fiber	1-1/2	1-1/2	2	2	2-1/2	2-1/2
	Cellular Glass	2	2	2-1/2	2-1/2	3	3
	Flexible Unicellular	(See Notes 1 & 2)					
35°F - 59°F	Mineral Fiber	1	1	2	2	2	2
	Cellular Glass	1-1/2	2	2-1/2	2-1/2	2-1/2	2-1/2
	Flexible Unicellular	(See Notes 1 & 2)					
Medium Temp. 60°F - 200°F	Mineral Fiber	1	1	1	1-1/2	1-1/2	1-1/2
	Cellular Glass	1-1/2	1-1/2	1-1/2	2	2	2
	Calcium Silicate	1-1/2	1-1/2	1-1/2	2	2	2
	Thermal Pipe	1-1/2	1-1/2	1-1/2	2	2	2
	Flexible Unicellular	(See Notes 1 & 2)					
High Temp. 201° - 375°F	Mineral Fiber	1-1/2	2	2	2	2	2
	Calcium Silicate	1-1/2	2	2	2-1/2	2-1/2	2-1/2
	Thermal Pipe	1-1/2	2	2	2-1/2	2-1/2	2-1/2
	Cellular Glass	2	2-1/2	2-1/2	2-1/2	2-1/2	2-1/2
376° - 500°F	Mineral Fiber	2	2	2-1/2	2	2	2
	Calcium Silicate	2	2	2-1/2	2-1/2	2-1/2	2-1/2
	Thermal Pipe	2	2	2-1/2	2-1/2	2-1/2	2-1/2
	Cellular Glass	2-1/2	2-1/2	3	3	3	3
501°F - 700°F	Mineral Fiber	1	2-1/2	3	3	3	3
	Calcium Silicate	2	2-1/2	3	3	3	3
	Thermal Pipe	2	2-1/2	3	3	3	3
	Cellular Glass	2-1/2	3	3-1/2	3-1/2	3-1/2	3-1/2
701°F - 900°F	Mineral Fiber	2-1/2	3	3-1/2	3-1/2	4	4
	Calcium Silicate	2-1/2	3	3-1/2	4	5	5
	Thermal Pipe	2-1/2	3	3-1/2	4	5	5
901°F - 1200°F	Mineral Fiber	3-1/2	4	5	5	6	6
	Calcium Silicate	3-1/2	4	5	5	6	6
	Thermal Pipe	3-1/2	4	5	5	6	6

NOTES:
1. Flexible unicellular insulation thickness shall be 1/2 inch.
2. Use of unicellular insulation shall be restricted to branch piping serving individual terminal units not to exceed 12 feet in length, piping on packaged equipment, and piping exterior to a building.

TABLE III. INSULATION FOR DUCT AND EQUIPMENT

SERVICE	MAXIMUM TEMP. °F	MATERIAL	FED. SPEC. or MIL. SPEC.	FORM	TYPE	GRADE	CLASS
Low & High Temp. Equipment & Piping	-30 to 200	Mineral Fiber	HH-I-558	A			1
		Cellular Glass	HH-I-551		I		
		Flexible Unicellular	HH-I-573				1
Air Cond. & Vent Ducts & Equipment	400	Mineral Fiber	HH-I-558	A			1
	350	Mineral Fiber	HH-I-558	B	I		6
	800	Cellular Glass	HH-I-551		I		
Air Heating Ducts, Heating Equipment Plumbing	400	Mineral Fiber	HH-I-558	A			1
	850	Mineral Fiber	HH-I-558	A			3
	1000	Mineral Fiber	HH-I-558	A			4
	1800	Mineral Fiber	HH-I-558	A			5
	350	Mineral Fiber	HH-I-558	B	I		6
	450	Mineral Fiber	HH-I-558	B	I		7
	1000	Mineral Fiber	HH-I-558	B	I		8
	800	Cellular Glass	HH-I-551		I		
	600	Thermal Block	MIL-I-2819				1
	1000	Thermal Block	MIL-I-2819				2
	1500	Thermal Block	MIL-I-2819				3
	2000	Thermal Block	MIL-I-2819				4
	1200	Calcium Silicate	HH-I-523		I		

TABLE III. INSULATION FOR DUCT AND EQUIPMENT

Delete "Flexible Unicellular HH-I-573".

On Page No. 18, in the "SERVICE" column change "Low & High Temp. Equipment & Piping" to read "Low & Medium Temp. Equipment & Plumbing Equipment"; change "Air Heating Ducts, Heating Equipment Plumbing" to "Air Heating Ducts, Heating Equipment".

On Page No. 19, in the "SERVICE" column delete "Serving Ranges & Ovens".

TABLE III. INSULATION FOR DUCT AND EQUIPMENT (CONTINUED)

SERVICE	MAXIMUM TEMP. °F	MATERIAL	FED. SPEC. or MIL. SPEC.	FORM	TYPE	GRADE	CLASS
Exhaust System Serving Ranges & Ovens	1200	Calcium Thermal Block	HH-I-523		I		
	600		MIL-I-2819				1
	1000		MIL-I-2819				2
	1500		MIL-I-2819				3
	2000		MIL-I-2819				4

TABLE IV. EQUIPMENT & DUCT INSULATION THICKNESS

SERVICE	EQUIPMENT	THICKNESS	REMARKS
Low Temp. Equipment -30°F to 59°F	Chilled Water Coolers, Tanks and Pumps	2"	
	Balancing Tanks	2"	
	Liquid Precoolers (Economizers)	2"	
	Heat Exchangers	2"	
Plumbing Equip. 60°F to 180°F		1-1/2"	
Air Heating Equipment 85°F and Above		1"	Rigid Insulation Exposed, Concealed
		1-1/2" (1 lb/CF)	Flexible Insulation Concealed Only, Except
		2" (3/4 lb/CF)	on Circular and Oval Ducts
		2"	In Fan Equipment and Machine Rooms, Except FA Intakes
Ventilation System 85°F and Below		Same as for Air Heating Equipment 85°F and Above	Sames as for Air Heating Equipment 85°F and Above
Air Conditioning 49°F and Up		Same as for Air Heating Equipment 85° and Above	Same as for Air Heating Equipment 85°F and Above
Exhaust System 1200°F Maximum	Welded Black Iron Oven and Range Hood Exhaust	2"	For Protection Against Burns Only See NFPA Hazard protection

TABLE IV. EQUIPMENT & DUCT INSULATION THICKNESS

In the "SERVICE" column change "Plumbing Equip. 60°F to 180°F" to read "Plumbing Equip. & High Temp Equip. 60°F to 200°F"; under the "THICKNESS' column for this item change 1-1/2" to 2".

For Air Heating Equipment 85°F and Above change the thickness for rigid insulation from 1" to 2"; change the thickness for flexible insulation from 1-1/2" to 2".

In the "EQUIPMENT" column delete "Welded Black Iron Oven and Range Hood Exhaust".

TABLE IV. EQUIPMENT & DUCT INSULATION THICKNESS (CONTINUED)

SERVICE	EQUIPMENT	THICKNESS	REMARKS
Heating Equipment (Hot Surfaces)			
Up to 250°F		2"	
251°F - 350°F		2-1/2"	
351°F - 500°F		3"	
501°F - 700°F		3-1/2"	
701°F - 900°F		4-1/2"	
901°F - 1200°F		5"	

---END---

SECTION 15272. WATER DISTRIBUTION

1. APPLICABLE PUBLICATIONS: The following publications of the issues listed below, but referred to elsewhere by basic designation only, form a part of this specification to the extent indicated by references thereto:

1.1 Federal Specifications:

WW-P-421D	Pipe, Cast Gray and Ductile Iron, Pressure (for Water and Other Liquids).
WW-V-51F	Valve, Angle, Check, and Globe, Bronze (125, 150 and 200 Pound, Threaded Ends, Flange Ends, Solder Ends, and Brazed Ends, for Land Use).
WW-V-54D & Am 3	Valve, Gate, Bronze (125, 150, and 200-pound; Threaded Ends, Flange Ends, Solder End, and Brazed Ends, for Land Use).
WW-V-58B	Valves, Gate, Cast-iron; Threaded and Flanged (for Land Use).

1.2 Military Specifications:

MIL-V-18436C & Am 2	Valves, Check: Bronze, Cast-iron, and Steel Body.

1.3 American Society for Testing and Materials (ASTM):

D2321-74	Underground Installation of Flexible Thermo-plastic Sewer Pipe."
B 61-76	Steam or Valve Bronze Castings.
B 62-76	Composition Bronze or Ounce Metal Castings.
B 88-76	Seamless Copper Water Tube.
D 1784-69	Rigid Poly (Vinyl Chloride) Compounds and Chlorinated Poly (Vinyl Chloride) Compounds.
D 1869-66(1972)	Rubber Rings for Asbestos-cement Pipe.
D 2241-74	Poly (Vinyl Chloride) (PVC) and Chlorinated Poly (Vinyl Chloride) (CPVC) Plastic Pipe (SDR-PR)

1.4 American Water Works Association (AWWA):

C 106-75	Cast-iron Pipe Centrifugally Cast in Metal Molds, for Water or Other Liquids.
C 108-75	Cast-iron Pipe Centrifugally Cast in Sand-lined Molds, for Water or Other Liquids.
C 110-71	Gray-iron and Ductile-iron Fittings, 2 in. Through 48 in., for Water and Other Liquids.
C 111-72	Rubber Gasket Joints for Cast-iron and Ductile-iron Pressure Pipe and Fittings.
C 115-75	Flanged Cast-iron and Ductile-iron Pipe with Threaded Flanges.
C 151-76	Ductile-iron Pipe, Centrifugally Cast in Metal Molds or Sand-lined Molds, for Water or Other Liquids.
C900-75	Polyvinyl Chloride (PVC) Pressure Pipe; 4 In. Through 12 In. For Water.

C 400-75	Asbestos Cement Pressure Pipe for Water and Other Liquids.
C 500-71	Gate Valves - 3 in. Through 48 in. - for Water and Other Liquids.
C 502-73	Fire Hydrants for Ordinary Water Works Service.
C 506-69	Backflow Prevention Devices - Reduced Pressure Principle and Double Check Valve Types.
C 600-64	Installation of Cast-iron Water Mains.
C 601-68	Disinfecting Water Mains.
C 603-65	Installation of Asbestos-cement Water Pipe.
C 700-71	Cold Water Meters - Displacement Type.
C 702-74	Cold Water Meters - Compound Type.
C 800-66	Threads for Underground Service Line Fittings.

1.5 Underwriters' Laboratories (UL):

UL 194	The Performance of Gasketed Joints for Cast-iron Pressure Pipe and Fittings, May 1973.
UL 246	Hydrants for Fire Protection Service, May 1973.
UL 262	Gate Valves for Fire-protection Service, May 1973.
UL 312	Swing-check Valves for Fire-protection Service, June 1975.
UL 789	Indicator Posts for Fire-protection Service, January 1975.

1.6 American National Standard Institute (ANSI):

A21.1-(1967)(R72)	Thickness Design of Cast-iron Pipe.
A21.6-1975	Cast-iron Pipe Centrifugally Cast In Metal Molds for Water or Other Liquids.
A21.8-1975	Cast-iron Pipe Centrifugally Cast in Sand-lined Molds, for Water or Other Liquids.
A21.10-1971	Gray-iron and Ductile-iron Fittings, 2 in. Through 48 in., for Water and Other Liquids.
A21.11-1972	Rubber Gasket Joints for Cast-iron and Ductile-iron Pressure Pipe and Fittings.
A21.15-1975	Flanged Cast-iron and Ductile-iron Pipe with Threaded Flanges.
A21.51-1976	Ductile-iron Pipe, Centrifugally Cast in Metal Molds or Sand-lined Molds, for Water or Other Liquids.
B16.18-1973	Cast Bronze Solder-joint Pressure Fittings.
B16.22-1973	Wrought Copper and Bronze Solder-joint Pressure Fittings.
B16.26-1975	Cast Copper Alloy Fittings for Flared Copper Tubes.

1.7 National Fire Protection Association (NFPA):

24-73	Outside Protection.

1.8 LANTDIV Plates:

WD-1	Standard Thrust Blocks for Water Mains.
WD-2	Fire Hydrant Installation.

2. GENERAL REQUIREMENTS: Section entitled "General Requirements", Mechanical, also applies to this section except as specified otherwise. The work includes provision of water piping and appurtenances outside of the limits bounded by the building five-foot line, the five-foot building line being a line drawn five feet outside of the outside face of building walls and parallel thereto.

3. SUBMITTALS REQUIRED: Shop drawings, manufacturer's data and certificates for equipment, materials, finish, and pertinent details for each system shall be submitted and approved before procurement, fabrication or delivery of such items to the job site. Partial submission will not be acceptable. Descriptive data shall be annotated to show the specific model, type and size of each item the Contractor proposes to furnish. The submittal requirements of section entitled "General Requirements, Mechanical", applies to the following lists. Items in the following lists (which are followed by (CO) shall be approved by the Contracting Officer.

3.1 Manufacturer's Data:

(a) Valves (CO)
(b) Hydrants (CO)
(c) Corporation Stops
(d) Curb Service Stops
(e) Goosenecks
(f) Valve Boxes
(g) Curb Boxes
(h) Meters (CO)
(i) Backflow Preventers (CO)
(j) Indicator Posts (CO)

3.2 Certificates of Compliance: Submit certificates from the manufacturer attesting that each of the following items conform to all requirements of this specification and of reference publications.

(a) Pipe and Fittings, Joints, and Couplings
(b) Valves (CO)
(c) Hydrants (CO)
(d) Meters (CO)
(e) Backflow Preventers (CO)
(f) Indicator Posts (CO)

4. MATERIALS:

4.1 Pipe: ~~Water piping 4 inches in diameter and larger shall be either cast-iron or asbestos cement~~. Water piping 3 inches in diameter shall be either cast-iron piping or copper tubing. In lieu of 3-inch pipe, fittings, and valves, 4-inch pipe, fittings and valves may be used. Water piping less than 3 inches in diameter shall be copper tubing. Pipe serving the yard hydrant systems may be plastic.

4.1 Pipe: Delete the first sentence in this paragraph and substitute the following in lieu thereof: "Water piping 4 inches in diameter and larger shall be either cast-iron, asbestos cement, or polyvinyl chloride (PVC) pressure pipe."

"4.1.5 Polyvinyl chloride (PVC) pressure pipe shall conform to the applicable requirements of AWWA C-900. Pipe shall be pressure class 150 with cast iron pipe equivalent outside diameter."

4.1.1 Asbestos cement pipe shall conform to AWWA C400, Class 150. Asbestos cement pipe shall be provided with tracer wire as specified hereinafter.

4.1.2 Cast-iron pipe shall conform to the applicable requirements of WW-P-421 for Grade A, B or C, as modified herein. Pipe shall be thickness Class 22 for cast gray iron pipe and thickness Class 50 for cast ductile iron pipe, except as otherwise specified for flanged pipe. Pipe shall have cement-mortar lining and shall have ends suitable for joints specified hereinafter.

(a) Gray cast-iron pipe shall conform to the applicable requirements of ANSI A21.6 (AWWA C106) or ANSI A21.8 (AWWA C108), except as modified by WW-P-421, and except that flanged pipe shall conform to ANSI A21.15 (AWWA C115) minimum 150 PSI working pressure, outside coated, cement-mortar lined.

(b) Ductile-iron pipe shall conform to the applicable requirements of ANSI A21.51 (AWWA C151), except as modified by WW-P-421, and except that flanged pipe shall conform to ANSI A21.15, minimum 150 PSI working pressure, outside coated, cement-mortar lined.

4.1.3 Copper tubing shall be hard copper tubing conforming to ASTM B88, Type K.

4.1.4 Plastic pipe shall conform to the requirements of ASTM D 2241, SDR 32.5, with push-on type joints and fittings. Rubber rings in joints shall conform to the requirements of ASTM D 1869.

4.2 Fittings:

4.2.1 Asbestos cement pipe fittings shall be cast-iron conforming to the applicable requirements of ANSI A21.10 (AWWA C110), and may be either mechanical joint or push-on joint type. Push-on joint fittings shall have bell design to fit the particular make of pipe and sealing ring on which the fittings are to be used. Fittings shall have cement-mortar lining equivalent to that specified for cast-iron pipe.

(a) Fittings for asbestos-cement pipe may, at the option of the Contractor, be solid copper with rubber ring gaskets of a type approved by the manufacturer of the pipe. Fittings shall be designed for pressure and water hammer in accordance with the applicable requirements of ANSI A21.1; fittings 8-inches and over shall be factory tested to not less than 500 pounds per square inch hydraulic pressure. Rubber gaskets shall be suited to assembly by the same method used for assembling pipe and couplings. Installation shall be in accordance with the printed directions of the manufacturer of the fittings. Only one type of fitting (copper or cast iron) shall be used for the work.

4.2.2 Fittings for cast gray and ductile iron pipe shall conform to the applicable requirements of ANSI A21.10 (AWWA C110) and may be either cast gray

"4.2.4 Fittings for polyvinyl chloride (PVC) pressure pipe shall be the same as specified hereinbefore for cast gray and ductile iron pipe."

or ductile iron; fittings with push-on joint ends shall be as specified for bell-and spigot joint ends except that bell design shall be modified, as approved, for push-on joints. Fittings shall have pressure rating at least equivalent to that of the pipe. Fittings shall have cement mortar lining equivalent to that of the pipe lining.

4.2.3 Fittings for copper tubing shall conform to the applicable requirements of ANSI B16.18 or B16.22 for solder-joint fittings.

4.3 Joints and Jointing Materials:

4.3.1 Asbestos-Cement Piping: Jointing materials for pipe and fittings shall conform to the applicable requirements of ASTM D1869 and shall be non-oil-resistant type.

4.3.2 Cast Gray and Ductile Iron Pipe:

(a) Push-on Joints: Shape of pipe ends shall conform to the applicable requirements of WW-P-421 for Type II pipe. Conformation of ends for fittings shall conform to the applicable requirements of ANSI A21.11 (AWWA C111). Gaskets and lubricants for pipe and fittings shall conform to the applicable requirements of ANSI A21.11 (AWWA C111). Drawings of the joint and gasket shall be furnished. Push-on joints shall also meet the applicable requirements of UL 194.

(b) Mechanical Joints: Dimensional and material requirements for pipe ends, glands, bolts and nuts, and gaskets shall conform to the applicable requirements of ANSI A21.11 (AWWA C111) or to the applicable requirements specified for Type III pipe in WW-P-421. Mechanical joints shall also meet the applicable requirements of UL 194.

(c) Flanged Joints: Ends of pipe and fittings shall be provided with cast-iron flanges conforming to the applicable requirements of ANSI A21.15. Bolts, nuts, and gaskets for flanged connections shall conform to the recommendations in the Appendix to ANSI A21.15. Gaskets shall be plain rubber, 1/8-inch thick.

(d) Adapters: Adapters shall be provided for connections of cast-iron pipe or asbestos-cement pipe to flanged accessories.

4.3.3 Insulating Joints: Joints between pipe of dissimilar metals shall be made up with a rubber-gasketed or other suitable approved type of insulating joint or dielectric coupling which will effectively prevent metal-to-metal contact between adjacent sections of piping.

4.4 Valves: Valves conforming to the same specification shall be of one make throughout the project.

4.4.1 Gate Valves:

"4.3.4 Polyvinyl chloride (PVC) pressure pipe: Jointing material for pipe shall conform to the applicable requirements of ASTM D1869"

(a) Gate Valves on Buried Piping: Valves shall have non-rising stems and shall be double-disc parallel seat type. Valves shall open by counterclockwise rotation of the valve stem. Valves shall have O-ring stem seals, except when gearing is specified, in which case conventional packing shall be used in lieu of O-ring seal. Stuffing boxes shall be bolted and constructed so as to permit the easy removal of parts for repairs.

(1) Valves 3-inch Size and Larger: Except as otherwise specified hereinafter, valves shall conform to AWWA C500 or to UL 262. Valves shall have mechanical-joint or push-on joint ends and gaskets conforming to ANSI A21.11 (AWWA C111), except as follows: Valves may have special ends, as approved, for connection to asbestos-cement piping. Valves conforming to UL 262 shall be designed for a hydraulic working pressure of 175 psi for valve sizes 12-inch and smaller and 150 psi for sizes larger than 12-inch. For the following conditions, valves shall conform to Standard UL 262 only: (a) for use at working pressures exceeding 175 psi for valve sizes 12-inch and smaller and 150 psi for 14-inch valve size;(b) for use with indicator posts. AWWA Gate valves 16-inch size and larger shall be provided with gearing and bypasses, and with indicators.

(2) Valves Smaller than 3-inch Size: Valves shall conform to the requirements of AWWA C500, except for size, or to UL 262. Valves shall be designed for a working pressure of 175 psi.

(b) Gate Valves in Valve Chambers, Valve Pits and in Above Ground Locations:

(1) Valves 3-inch Size and Larger: Valves shall conform to WW-V-58 or to UL 262. Valves shall be of the outside-screw-and-yoke configuration. Valves shall have flanged ends unless otherwise indicated or otherwise specified hereinafter. Valves conforming to WW-V-58 shall be Type II, Class 1. Valves conforming to UL 262 shall be designed for a hydraulic working pressure of 175 psi for valve sizes 12-inch and smaller and 150 psi for valve sizes larger than 12-inch.

(2) Valves Smaller Than 3-inch Size: Valves shall conform to either WW-V-54, WW-V-58, or to UL 262. Valves conforming to WW-V-54 shall be Type III, Class A. Valves conforming to WW-V-58 shall be Type II, Class 1. Valves conforming to UL 262 shall be of outside-screw-and-yoke configuration and shall be designed for a hydraulic working pressure of 175 psi. Valves shall have threaded ends.

(3) Supervisory Alarms: Provide for each shut off valve located in the main valve pit, and controlling the fire main, an alarm switch suitable for low voltage D.C. operation; alarm signals when valve is closed. Wiring and remote alarm indication will be provided under section entitled "Manual and Automatic Fire Alarm Systems."

4.4.2 Check Valves:

(a) Check Valves 3-inch Size and Larger: Valves shall conform to MIL-V-18436 or to UL 312. Valves shall have hub ends suitable for mechanical joint on buried lines; and shall have flanged ends in valve chambers, valve pits, or in above ground locations. Swing-check valves shall have clear-port opening. Valves conforming to MIL-V-18436 shall be Type III, shall have cast-iron or steel bodies with bronze trim, and shall be designed for a hydraulic working pressure of 175 psi for valve sizes 12-inch and smaller and 150 psi for valve sizes larger than 12-inch.

(b) Check Valves Smaller Than 3-inch Size: Valves shall conform to either WW-V-51, MIL-V-18436, or UL 312. Valves shall have threaded ends. Valves conforming to WW-V-51 shall be Type IV, Class A. Valves conforming to MIL-V-18436 shall be Type III, shall have cast-iron or steel bodies with bronze trim, and shall be designed for a hydraulic working pressure of 175 psi.

4.5 Hydrants shall conform to AWWA C502 or to UL 246, Base Valve design. They shall be 6 inches in diameter with 5-inch clear opening through the valve and shall be provided with a 4.5-inch pumper connection and two 2.5-inch hose connections. Hydrants shall be of the frost-proof and nonflooding post type which will not flood in the hydrant when the valve is closed, and can be repaired without digging. A safety flange shall be provided for post type hydrants so that the barrel will not break if struck by a vehicle or other object. The hydrants shall be designed for 150 psi working pressure and 300 psi hydrostatic test pressure, and shall open counterclockwise. Working parts shall be bronze. Hose and pumper connection threads and operating nut shall be National Standard. Each hydrant shall be preceded in the line by a 6-inch gate valve. Fire hydrants shall receive at least one coat of primer and two coats of yellow enamel paint; except that red be used for tops of hydrants in nonpotable water systems. Hydrant number and main size shall be stenciled on the hydrant barrel using black stencil paint.

4.6 Valve Boxes: Except where indicator posts are provided, each gate valve on buried piping shall be provided with an adjustable cast-iron valve box of a size suitable for the valve on which it is to be used. Outside of paved areas boxes may be of plastic; such plastic valve boxes shall be constructed of ABS (Acrylonitrile-Butadiene-Styrene) plastic or of inorganic fiber reinforced black polyolefin plastic. The head shall be round and the lid shall have the word "WATER" cast on it. The least diameter of the shaft of the box shall be 5-1/4 inches. Each cast-iron box shall be given a heavy coat of bituminous paint.

4.7 Yard hydrants shall be the non-freeze box type with bronze casing, all bronze interior parts, hinged locking cover, straight inlet with 3/4" H.P.T. hose connection. Minimum depth of bury for valve shall be 3 feet.

4.8 Water Meters: Water meters shall conform to AWWA C700, displacement type, for sizes up to 2" and to AWWA C702, compound type for 3" and larger sizes. Meter shall register in U.S. gallons. Displacement type meters shall be the frostproof type. Certificate of testing water meters for conformance to accuracy and capacity requirements in accordance with the applicable AWWA standard shall be furnished.

4.9 Post Indicators: Post indicators for gate valves shall conform to UL 789. They shall receive at least one coat of primer and two coats of red enamel paint.

4.10 Drinking Fountain: 42-inch high pedestal fountain in green polyester on steel satin chrome plated anti-squirt bubbler protected by heavy gauge reinforced welded steel guard and mounted on stainless steel receptor attached to pedestal with vandol-resistant bowl holder; freeze proof valve hand operated with recessed lever handle; valve bury depth to be 36 inches.

5. INSTALLATION OF PIPELINES:

5.1 Location of Water Lines: Where the location of the water line is not clearly defined by dimensions on the project drawings, the water line shall not be laid closer horizontally than 10-feet from any sewer line. Where water lines cross under gravity sewer lines, the sewer line for a distance of at least 10 feet on each side of the crossing shall be fully encased in concrete, unless sewer line is made of pressure pipe with rubber-gasketed joints and no joint is located within 3-feet horizontally of the crossing. Water lines shall in all cases cross above sewer force mains and inverted siphons and shall be not less than 2-feet above sewer line; joints in sewer line closer horizontally than 3-feet to the crossing shall be encased in concrete. Water lines shall not be laid in the same trench with gas lines, fuel lines, or electric wiring.

5.2 Handling: Pipe, fittings, valves, hydrants, and other accessories shall be handled in such manner as to insure delivery to the trench in sound, undamaged condition. Special care shall be taken not to injure pipe coatings or linings. If coatings or linings of pipe and fittings are damaged, satisfactory repairs shall be made at no extra cost to the Government. Pipe shall be carried to the trench and not dragged. Rubber gaskets that are not to be installed immediately shall not be left in the sunlight, but shall be stored under cover out of direct sunlight.

5.3 Pipe Laying and Jointing: Pipe, fittings, valves and accessories will be carefully inspected before and after installation and those found defective will be rejected. Pipe and fittings shall be free from fins and burrs. Before being placed in position, pipe, fittings, valves, and accessories shall be cleaned, and shall be maintained in a clean condition. Proper facilities shall be provided for lowering sections of pipe into trenches. Under no circumstances shall pipe, fittings, valves, or any other water line material be dropped or dumped into trenches. Pipe shall be cut accurately to measurements established at the site and shall be worked into

place without springing or forcing. Piping that does not allow sufficient space for proper installation of jointing material shall be replaced by one of proper dimensions. Blocking or wedging between bells and spigots will not be permitted. Bell-and-spigot pipe shall be laid with the bell end pointing in the direction of laying. The pipe shall be graded in straight lines, taking care to avoid the formation of any dips or low points. Pipe shall be supported at its proper elevation and grade, care being taken to secure firm and uniform support. Wood support blocking will not be permitted. The full length of each section of pipe and fittings shall rest solidly on the pipe bed, with recesses excavated to accommodate bells, joints, and couplings. Anchors and supports shall be provided where necessary and where indicated on the project drawings for fastening work into place. Proper provision shall be made for the expansion and contraction of pipe lines. Trenches shall be kept free of water until joints have been properly made. Open ends of pipe at the end of each day's work shall be closed temporarily with wood blocks or bulkheads. Pipe shall not be laid when the conditions of trench or weather are unsuitable. Depth of bury shall be not less than three feet. Piping shall be inspected, tested, and approved before being completely buried, covered, or concealed. Excavation bedding and backfilling of pipe trenches shall be as specified in the section entitled "Earthwork", as modified herein.

5.4 Manufacturer's Recommendations: Where installation procedures or any part thereof are required to be in accordance with the recommendations of the manufacturer of the material being installed, printed copies of these recommendations shall be furnished to the Contracting Officer prior to installation. Installation of the item will not be allowed to proceed until the recommendations are received. Failure to furnish these recommendations can be cause or rejection of the material.

5.5 Special Installation Requirements: Asbestos-cement pipe shall be installed in accordance with AWWA-C-603 except as modified herein. Cast-iron pipe and copper tubing shall be installed in accordance with AWWA-C-600 except as modified herein. "Polyvinyl chloride (PVC) pressure pipe shall be installed in accordance with ASTM D2321 except as modified herein."

5.6 Joints:

5.6.1 Joints for asbestos-cement pipe shall be made with couplings and sealing rings. Joints between asbestos-cement pipe and cast-iron fittings shall be push-on joints or mechanical joints. Sealing rings as specified hereinbefore shall be used with push-on joints; gaskets for mechanical joint shall conform to ANSI A21.11 (AWWA C111).

5.6.2 Joints for Cast-Iron Pipe: Push-on and mechanical joints shall be made in accordance with the requirements of AWWA C600; mechanical joints shall further follow the "Notes on Installation of Mechanical Joints" given in ANSI A21.11 (AWWA C111). Flanged-joints shall be made up tight, care being taken to avoid undue strain on flanges, valves, fittings, pump nozzles, and other equipment and accessories.

"5.6.4 Joints for polyvinyl chloride (PVC) pressure pipe shall be the bell type designed for joint assembly using elastomeric gasket type seals."

5.6.3 Joints for Copper Tubing: Copper tubing shall be cut with square ends, and all burrs and fins removed. Tubing shall be handled carefully and all tubing dented, gouged, or otherwise damaged shall be replaced with undamaged tubing. Solder joints shall be made using 50-50 lead-tin solder. End of tubing and inside of fitting or coupling shall first be cleaned with wire brush or abrasive. A resin flux shall then be applied to the tubing end and on the recess inside of fitting or coupling. Tubing end shall then be inserted to the full depth of the recess and soldered. For compression joints on flared tubing, the tubing shall be inserted through the coupling nut and flared with an approved flaring tool.

5.7 Connections to New Water Mains: Water lines larger than 2-inch size shall be connected to the main by a rigid connection and shall have a gate valve located below the frostline, unless otherwise indicated.

5.8 Connections to Existing Water Supply Systems: Tapping or drilling machine valve and sleeves shall be used for connections to be made under pressure. The sleeves shall be bolted around the mains and calked; the valve bolted to the branch. The valve shall conform to the latest specification for valves of the American Water Works Association. The valve shall be opened, the drilling machine attached; the tap made, the valve closed and the drilling machine removed all without interruption of service. The Contractor shall furnish all material required to make connections into the existing water supply systems; and shall perform all necessary excavating, backfilling and other incidental labor as required. The Contractor shall furnish the labor and the tapping or drilling machine for making the actual connections to the existing systems. The Contracting Officer shall be notified in writing at least ten days prior to the date the connections are required. Approval by the Contracting Officer shall be received before any service is interrupted.

5.9 Pipe Anchorage: Anchorage of buried pipe lines shall be by means of concrete thrust blocks (reaction backing), using concrete with a minimum compressive strength of 2000 psi. All 1/16 and sharper bends, tees, and dead ends of pipe shall be securely blocked in the direction of flow with poured-in-place concrete bearing solidly against the pipe and affording a minimum of 3 square feet of bearing area against a vertical trench face for 3-and 4-inch pipe, and in accordance with LANTDIV Plate WD-1 for piping 6-inch diameter and larger. Plate WD-1 appears at the end of this section.

5.10 Setting Valves and Valve Boxes: Valves and valve boxes shall be set plumb, and centered, with valve boxes placed directly over the valves. Valve boxes shall, if possible, be located outside the area of the roads and streets. Earth fill shall be carefully tamped around the valve box to a distance of 4 feet on all sides of the box, or to the undisturbed trench face if less than 4 feet. Valves shall have the interiors cleaned of all foreign matter before installation. Stuffing boxes shall be tightened and the valve shall be inspected in opened and closed positions to see that all parts are in working condition.

5.11 Setting Post Indicators: Post indicators shall be installed with the operating unit three feet above grade.

5.12 Setting Fire Hydrants: Post type hydrants shall be installed in accordance with LANTDIV Plate WD-2 which appears at the end of this section. Hydrants shall be set plumb. Hydrants shall have the interiors cleaned of all foreign matter before installation. Hydrants shall be checked in opened and closed positions to see that all parts are in proper working order. Earth backfill shall be carefully tamped on all sides of the hydrant. If the character of the soil is such that the hydrant cannot be securely blocked, bridle rods and rod collars shall be used. Bridle rods and rod collars shall be not less than 3/4-inch stock and shall be protected by a coat of bituminous paint.

5.13 Wire Tracer for Nonmetallic Pipe: The full length of runs of nonmetallic pipe, if used, shall be provided with a continuous bare copper or aluminum wire, not less than 0.10 inch in diameter, which will provide means of location of pipes with an electronic metal detector applied at the ground surface above the pipe. Wire shall be secured to the pipe sufficiently to insure that the wire remains in place during construction operations.

5.13 Warning Tapes in Earth Trenches: For the purposes of early warning and identification of buried pipes during future trenching or other excavation continuous identification tapes shall be provided in the trench. Tape shall be non-magnetic plastic tape or aluminum foil plastic backed tape manufactured for the purpose of early warning and identification of utilities buried below the tape. Tape shall be at least three inches in width. Color of tape shall be as standard with the manufacturer with respect to the type of utility buried below the tape. Tape shall have lettering at least one inch high with not less than the following identification on the tape: "BURIED WATER LINE BELOW". Tape shall be installed in accordance with the printed recommendations of the tape manufacturer, as modified herein. Tapes shall be buried at a depth of 6 inches below the top surface of earth; in pavements this 6 inches shall be measured from the top of the subgrade.

6. DISINFECTION: New water piping and existing water piping affected by Contractor's operations shall be disinfected in accordance with AWWA C601. Piping system shall be filled with solution containing minimum of 50 parts per million of available chlorine and allowed to stand for minimum period of 24 hours. Solution shall be flushed from system with clean water until maximum residual chlorine content is not greater than 0.2 parts per million.

7. IDENTIFICATION TAGS AND PLATES: Valves shall be provided with tags or plates numbered and stamped for their usage. Plates and tags shall be of brass or suitable nonferrous material and shall be securely mounted or attached.

8. BACKFLOW PREVENTORS shall be of the reduced pressure principle type conforming to AWWA C506, as modified herein. Backflow preventers shall be flanged, and shall be of all bronze construction for sizes of 4 inches and

smaller and of galvanized cast-iron construction for sizes larger than 4 inches. Discs shall be of neoprene and diaphragm of neoprene coated duck. Springs shall be 18-8 stainless steel. The backflow preventer shall include 2 check valves with an area of reduced pressure between the check valves and a relief device arranged to discharge to the atmosphere. Fluctuation in line pressure shall not cause cycling. The backflow preventer shall automatically maintain a low pressure zone to positively prevent the backflow of water into the supply system. The backflow preventer shall automatically indicate failure of any part vital to the prevention of backflow by the relief device continuously discharging. The backflow preventer shall be suitable for a cold water working pressure of 175 psi. The backflow preventer shall be designed so that any moving part may be replaced without removing the backflow preventer.

8.1 A Certificate of Full Approval or a current Certificate of Approval shall be furnished for each design, size, and make of backflow preventer being provided. The certificate shall be from the Foundation for Cross-Connection Control and Hydraulic Research, University of Southern California, and shall attest that this design, size, and make of backflow preventer has satisfactorily passed the complete sequence of performance testing and evaluation for the respective level of approval. A Certificate of Provisional Approval will not be acceptable in lieu of the above.

8.2 Anti-freeze Device shall be provided for each backflow-preventer and shall be activated by the ambient air temperature. Anti-freeze devices shall be factory set to begin to open at 35 degrees Fahrenheit, to fully open at 29 degrees Fahrenheit air temperature, and to fully close at 37 degrees Fahrenheit air temperature. Each anti-freeze device shall be provided with a strainer furnished by the anti-freeze device manufacturer. Flow at full open position shall be not less than 8 gpm at 60 psi. Anti-freeze device shall be installed so that discharge flow shall spill without any build-up of ice to block the discharge from anti-freeze device. Provide adjacent to each anti-freeze device in a conspicuous location a nonferrous metal plate painted yellow with black lettering with the words "DO NOT CLOSE VALVE". Anti-freeze device shall be one of the following:

(a) Automatic Bleeder Valves will be self-contained thermally actuated valve operated by a material having the proper temperature and volume relationship to open and close the valve. Valves shall have over-temperature spring to protect the thermal system and poppet from damage because of high temperatures. If the thermal system fails, the valve shall open. Valves shall be all bronze with stainless steel springs and Buna-S poppet.

(b) Temperature Control Valves shall be self-contained complete with thermostat and flexible armored capillary tubing. Valve shall be brass body single seated with monel tubing and valve operator fully enclosed in stainless steel.

9. FIELD TESTING AND INSPECTION:

9.1 General: All work shall be proved to be in first class condition and constructed properly in accordance with the drawings and specifications. All defects and leaks disclosed by the tests shall be corrected. Piping shall not be completely buried, covered, or concealed until it has been inspected, tested, and approved, except when procedure is modified by the referenced installation and testing standard.

9.2 Field Tests: Testing procedures shall be as specified hereinafter for the respective kind of piping. On those distribution systems utilized for fire hydrants, sprinkler systems, or other fire protection purposes, hydrostatic pressure for pressure test shall be 50 psi in excess of the maximum working pressure of the system, but shall be not less than 200 psi and shall be held for a period of not less than 2 hours. For other systems, hydrostatic pressure for pressure test shall be 50 percent in excess of the maximum working pressure of the system, but shall be not less than 100 psi and shall be held for a minimum of one hour. Prior to the pressure test, that portion of the water line being treated shall be filled with water for a soaking period of not less than 24 hours. Hydrostatic pressure for leakage test for all systems shall be the maximum working pressure of the system, except as otherwise specified hereinafter. Leakage test may be performed at the same time and at the same test pressure as the pressure test. Pipe, joints, valves and fittings in the test section shall be examined. Equipment shall be tested in operation to demonstrate compliance with specification requirements. Each hydrant and all control valves shall be fully opened and closed under water pressure. Appliances, water and equipment for testing shall be furnished by the Contractor at his own expense, and the systems tested until proved satisfactory. The Contractor shall submit a certificate similar to that specified in NFPA 24 with a request for a formal inspection at least two working days prior to the date the inspection is to take place. At this inspection, any or all of the required tests shall be repeated as required.

9.2.1 Asbestos-cement pipelines shall be tested in accordance with the applicable provisions of AWWA 603, except as otherwise specified hereinbefore.

9.2.2 Testing of cast-iron pipelines and copper tubing lines shall be in accordance with AWWA C600, except as specified otherwise herein. The amount of leakage on lines with push-on or mechanical joints shall not exceed the amounts given in AWWA C 600. No leakage will be allowed at flanged or soldered joints.

END

"9.2.3 Testing of polyvinyl chloride (PVC) pressure pipe shall be in accordance with AWWA C600, except as otherwise specified hereinbefore. The amount of leakage shall not exceed the amounts given in AWWA C-600 for push-on or mechanical joints."

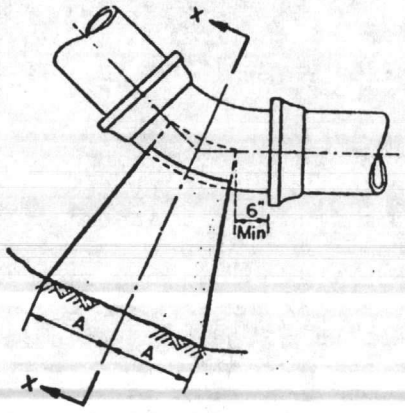

PLAN
BENDS

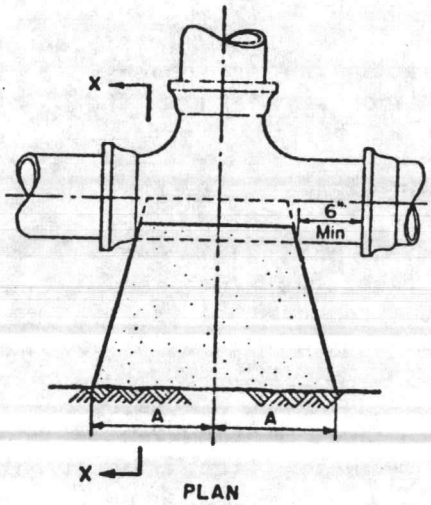

PLAN
TEES

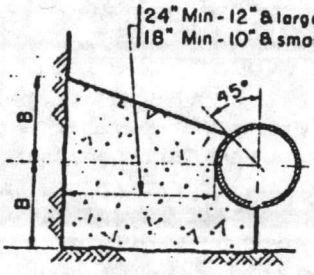

SECTION X-X
BENDS & TEES

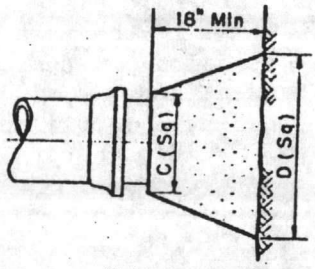

PLAN & ELEVATION
PLUGS

SIZE	1/4 BENDS		1/8 BENDS		1/16 BENDS		TEES		PLUGS	
	A	B	A	B	A	B	A	B	C	D
6"	16"	10"	9"	10"	6"	8"	10"	12"	10"	21"
8"	22"	13"	12"	13"	8"	10"	13"	16"	12"	29"
10"	26"	17"	14"	17"	10"	13"	16"	20"	14"	36"
12"	29"	21"	16"	21"	11"	16"	18"	24"	16"	41"
14"	35"	24"	19"	24"	12"	20"	22"	27"	18"	48"
16"	38"	27"	21"	27"	12"	24"	24"	30"	20"	54"

NOTE: Based on 100 p.s.i. static pressure plus A.W.W.A. water hammer
All bearing surfaces to be carried to undisturbed ground

STANDARD THRUST BLOCKS FOR WATER MAINS

LANTDIV PLATE WD-1

05-77-7526
15272-14

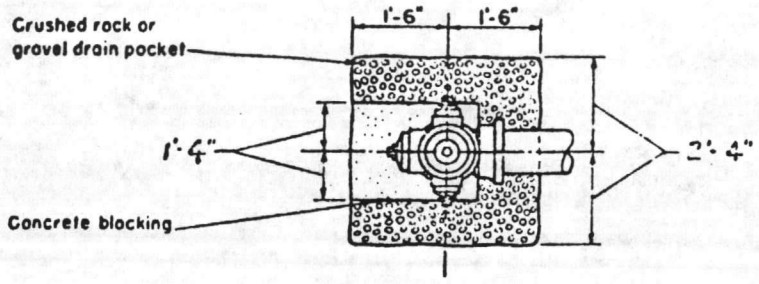

PLAN

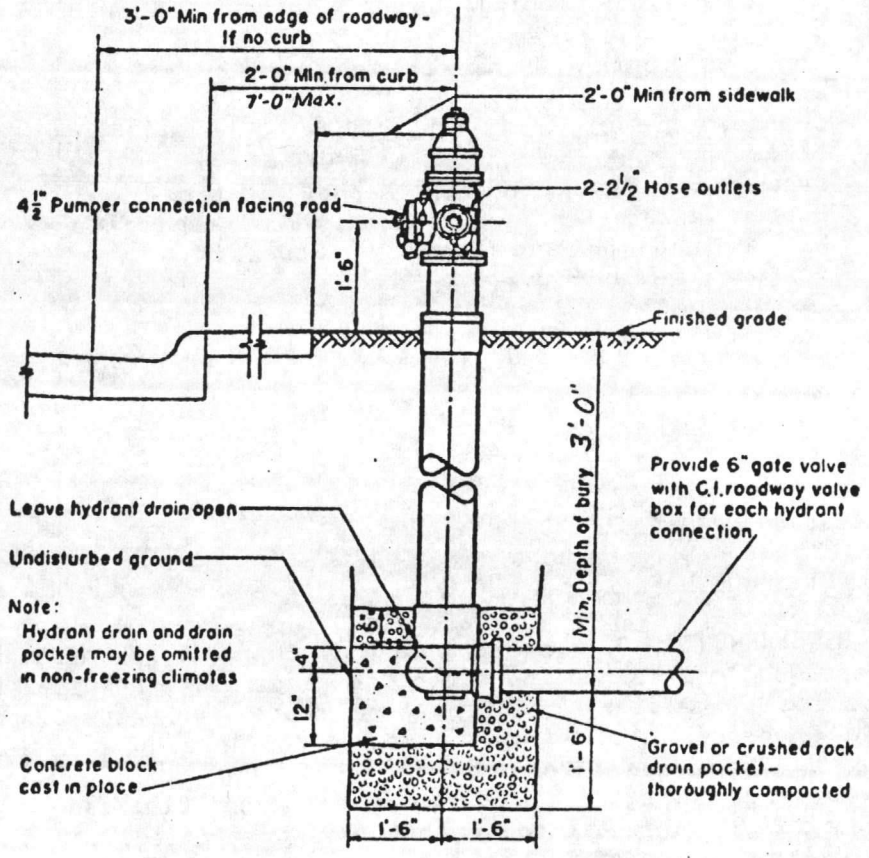

SECTION

FIRE HYDRANT INSTALLATION

LANTDIV PLATE WD-2

05-77-7526
15272-15

SECTION 15301. EXTERIOR SANITARY GRAVITY SEWERS

1. APPLICABLE PUBLICATIONS: The following publications of the issues listed below, but referred to elsewhere by basic designation only, form a part of this specification to the extent indicated by references thereto:

1.1 Federal Specifications:

RR-F-621B	Frames, Covers, Gratings, Steps, Sump and Catch Basin, Manhole.
SS-S-210A & Am 1	Sealing Compound, Preformed Plastic, for Expansion Joints and Pipe Joints.

1.2 American Society for Testing and Materials (ASTM):

A74-75	Cast-iron Soil Pipe and Fittings.
C 32-73	Sewer and Manhole Brick (Made From Clay or Shale).
C 62-75a	Building Brick (Solid Masonry Units Made From Clay or Shale).
C 139-73	Concrete Masonry Units for Construction of Catch Basins and Manholes.
C 425-75	Compression Joints for Vitrified Clay Bell and Spigot Pipe.
C 478-75	Precast Reinforced Concrete Manhole Sections.
C 564-70(1976)	Rubber Gaskets for Cast Iron Soil Pipe and Fittings.
C 700-75	Extra Strength and Standard Strength Clay Pipe and Perforated Clay Pipe.

1.3 Cast Iron Soil Pipe Institute (CISPI):

No. 301-72	Hubless Cast Iron Sanitary System.

1.4 LANTDIV Plates:

SS-1	Standard Manhole.
SS-2	Standard Drop Manhole.
SS-3	Cleanout Detail.

2. GENERAL REQUIREMENTS: Section entitled "General Requirements, Mechanical," also applies to this section except as specified otherwise. The work includes provision of sanitary gravity sewer piping and appurtenances outside of the limits bounded by the building five-foot line, the five-foot building line being a line drawn five feet outside of the outside face of building walls and parallel thereto. Sewer piping within buildings and within the five-foot building line is specified in the section entitled "Plumbing". Trenching and backfilling are specified in the section entitled "Earthwork". Concrete work shall be in accordance with the section entitled "Cast-In-Place Concrete", using concrete with a compressive strength not less than 3,000 psi.

Force main sewers and lift stations are specified in other sections. Each system shall be complete and ready for operation. Piping shall be inspected, tested, and approved before being buried, covered, or concealed.

3. SUBMITTALS REQUIRED: Shop drawings, manufacturer's data and certificates for equipment, materials, finish, and pertinent details for each system shall be submitted and approved before procurement, fabrication or delivery of such items to the job site. Partial submission will not be acceptable. Descriptive data shall be annotated to show the specific model, type and size of each item the Contractor proposes to furnish. The submittal requirements of section entitled "General Requirements, Mechanical", applies to the following lists.

3.1 Manufacturer's Data:

a. Frames and Covers for Manholes
b. Cleanouts
c. Precast Manholes
d. Adapters

3.2 Certificates of Compliance: Submit certificates from the manufacturer attesting that each of the following items conform to all requirements of this specification and of reference publications.

a. Pipe, and Pipe Fittings and Joints
b. Frames and Covers for Manholes
c. Precast Manholes
d. Brick
e. Masonry Units

4. MATERIALS:

4.1 Sanitary Gravity Sewer Piping: Except where cast iron is indicated or specified, piping shall be clay piping.

4.1.1 Clay piping shall be extra-strength vitrified-clay pipe and fittings conforming to ASTM C700.

4.1.2 Cast-iron piping shall conform to ASTM A74, service weight.

4.1.3 Hubless Cast-iron Piping: In lieu of service weight cast-iron hub-and-spigot pipe the Contractor may use hubless cast-iron piping and fittings conforming to CISPI Standard No. 301.

4.2 Pipe Joints:

4.2.1 Clay Pipe: Joints in clay pipe and fittings shall be compression joints conforming to ASTM C425.

4.2.2 Hub and Spigot Cast-iron Pipe: Joints in hub and spigot cast-iron pipe and fittings shall conform to ASTM C564. The piping shall be as specified hereinbefore, except for dimensional modifications to the hub and the spigot end to suit the gasket. The gasket shall be furnished with the pipe and shall be the same class as the pipe in which it is installed.

4.2.3 Hubless Cast-iron Pipe: Joints in hubless cast-iron pipe and fittings shall conform to CISPI Standard No. 301.

4.2.4 Joints between dissimilar types of pipe shall be made with manufacturer's standard adapters manufactured for connecting dissimilar types of pipe. Adapters shall be of polyvinyl chloride (PVC) or rubber, and shall be provided with stainless steel clamps with stainless steel take-up bolts for attaching to each end of the pipe.

4.3 Cleanouts shall be in accordance with LANTDIV Plate SS-3, which appears at the end of this section, and shall be constructed of cast-iron soil pipe and fittings conforming to ASTM A74. Cleanout plugs shall be heavy brass, bronze or thermo-plastic with recessed removal plug.

4.4 Manholes:

4.4.1 Brick shall conform to ASTM C32 for standard size, Grade MS, or ASTM C62 for standard size, Grade SW, except that absorption test will be waived.

4.4.2 Solid concrete masonry units shall conform to ASTM C139.

4.4.3 Cement mortar for masonry work, pargeting and other purposes shall be mixed in the proportion of one part Portland cement and 2 parts of approved mortar sand. The quantity of water in the mixture shall be sufficient to produce a stiff workable mix. Water shall be potable and free from harmful acids, alkalies and organic impurities. The mortar shall be used within 30 minutes after the ingredients are mixed with water.

4.4.4 Precast Concrete Manholes: Risers and tops shall conform to ASTM C478, except that spacing of manhole steps or ladder rungs shall not exceed 12 inches. They shall be laid in full beds of mortar. Concrete precast and cast-in-place bases shall have smooth inverts accurately shaped to a semi-circular bottom conforming to the inside contour of the adjacent sewer sections. Changes in direction of the sewer and entering branches into the manhole shall have a circular curve in the manhole invert of as large a radius as the size of the manhole will permit. Joints in precast sections shall be made with preformed plastic gaskets conforming to SS-S-210. Precast manholes shall be provided with a 12-inch layer of gravel bedding under the concrete bases of the manholes.

4.4.5 Frames and covers for manholes shall conform to RR-F-621, Figure 1, Size 22A for frame and Figure 8, Size 22A for cover in paved areas, and Figure 4, Size 22 for frame and Figure 12, Size 22 for cover in nonpaved areas. Frames and covers shall be factory coated with asphalt based paint.

4.4.6 Manhole steps shall conform to RR-F-621.

4.5 Flame Arrester: Mushroom vent with circular plate-type flame arrester, constructed of cast aluminum collar, weather cap and flame arrester plates. Underwriters Laboratories approved.

5. INSTALLATION:

5.1 Pipe Laying: Pipe shall be inspected in the sling and approved before lowering into the trench. Defective, damaged, or unsound pipe will be rejected. Batterboards shall be provided not more than 25 feet apart in trenches for checking and insuring proper pipe slope and elevation. Laser beam method may be used for insuring proper pipe slope and elevation in lieu of batterboards. Except where otherwise necessary for making connections with other piping, pipe shall be laid with hubs or bells facing in the direction of the laying. Where cutting of the pipe is necessary, it shall be done with approved mechanical cutters in a manner that will not damage the pipe. The full length of each section of pipe shall rest solidly upon the pipe bed with recesses excavated to accommodate the bells, hubs, and joints. Pipe that has the grade or joint disturbed after laying shall be taken up and relaid. The interior of the pipe shall be thoroughly cleaned of all foreign matter before being laid in the trench and shall be kept clean during laying operations by means of plugs or other approved methods. When work is not in progress, open ends of pipe and fittings shall be securely closed so that no trench water or other foreign substance will enter the pipes or fittings.

5.2 Joints: Pipe joints shall be of the types specified hereinbefore. Except as specified otherwise, joint installation shall follow the printed instructions of the pipe manufacturer. Adapters shall be installed in accordance with the printed instructions of the adapter manufacturer.

5.3 Connections to Existing Sanitary Systems: The Contractor shall furnish all material and labor required to make connections into the existing sanitary systems; and shall perform all necessary excavating, backfilling, and other labor as required. Where new manholes are constructed on existing lines, the existing pipe shall be removed as required to properly construct the structures. The pipe shall be cut or broken neatly so that the pipe ends will be approximately flush with the interior face of structure walls, but not protruding beyond such face into the structure. The pipe to wall connections shall be mortared smoothly to produce smooth transitions and watertight connections. The Contracting Officer shall be notified in writing at least ten days prior to the date the connections are required. Approval by the Contracting Officer shall be received before any service is interrupted.

5.4 Warning Tapes in Earth Trenches: For the purposes of early warning and identification of buried pipes during future trenching or other excavation, continuous identification tapes shall be provided in the trench. Tape shall be non-magnetic plastic tape or aluminum foil plastic backed tape manufactured for the purpose of early warning and identification of utilities buried below the tape. Tape shall be at least three inches in width. Color of tape shall be as standard with the manufacturer with respect to the type of utility buried below the tape. Tape shall have lettering at least one inch high with not less than the following identification on the tape: "BURIED SEWER LINE BELOW". Tape shall be installed in accordance with the printed recommendations of the tape manufacturer, as modified herein. Tapes shall be buried at a depth of 6 inches below the top surface of earth; in pavements this 6 inches shall be measured from the top of the subgrade.

6. MANHOLES: Manhole construction shall be in accordance with LANTDIV Plate SS-1 and SS-2 which appears at the end of this section, using materials as specified hereinbefore except for 72" diameter manholes, which shall be precast concrete. Pargeting shall be applied to all surfaces of the exterior surfaces of masonry manholes; pargeting is not required on precast concrete manholes. Precast manholes shall be set on a 12-inch thick layer of gravel.

6.1 Brickwork: Brick shall be laid in all header courses to form full and close joints of cement mortar on their beds, ends, and sides in one operation. Vertical joints shall be radial from the center. Brickwork shall be built neatly around pipe inlets and outlets using sufficient mortar to seal the pipe tightly in the wall.

6.2 Concrete Block: The block wall shall be constructed in horizontal courses, with vertical joints broken. Blocks shall be laid in mortar and all joints shall be completely filled with mortar.

7. TESTING AND INSPECTION: All work shall be proved to be constructed in accordance with the drawings and specifications. All defects in the work provided by the Contractor shall be corrected by him at his own expense. A light held at one end of the piping shall show a partially full circle of light through the pipe when viewed from the adjoining manhole or end of the piping. Piping shall be tested for infiltration by means of a suitable weir or other device. When determination of infiltration is not practicable because of dry trench conditions, an exfiltration test shall be performed by filling the piping with water so that the head will be at least 4 feet above the crown of the upper end of the section being tested. The amount of leakage (infiltration or exfiltration) shall not exceed 200 gallons per inch of diameter per day per mile of pipe.

---END---

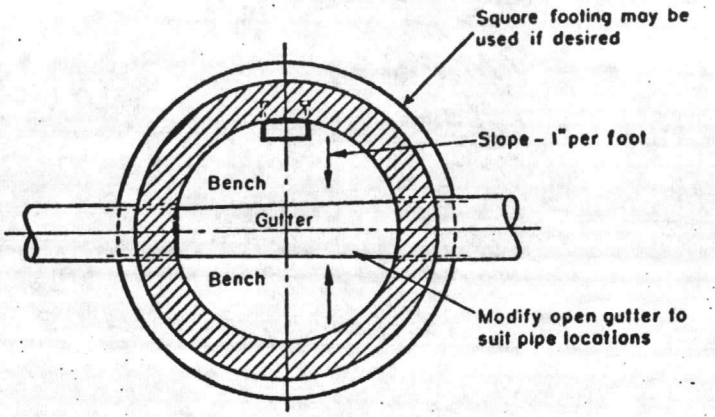

PLAN

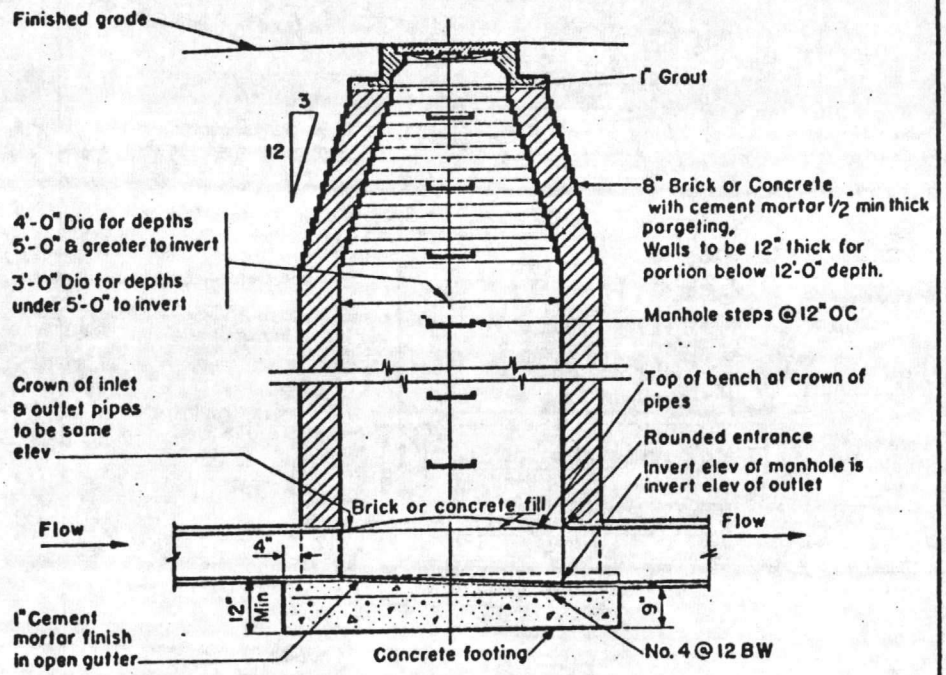

SECTION

STANDARD MANHOLE

LANTDIV PLATE SS-1

05-77-7526
15301-6

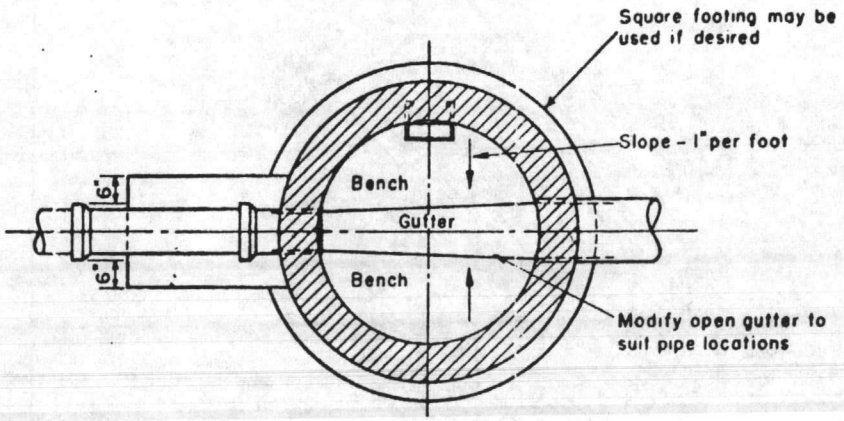

PLAN

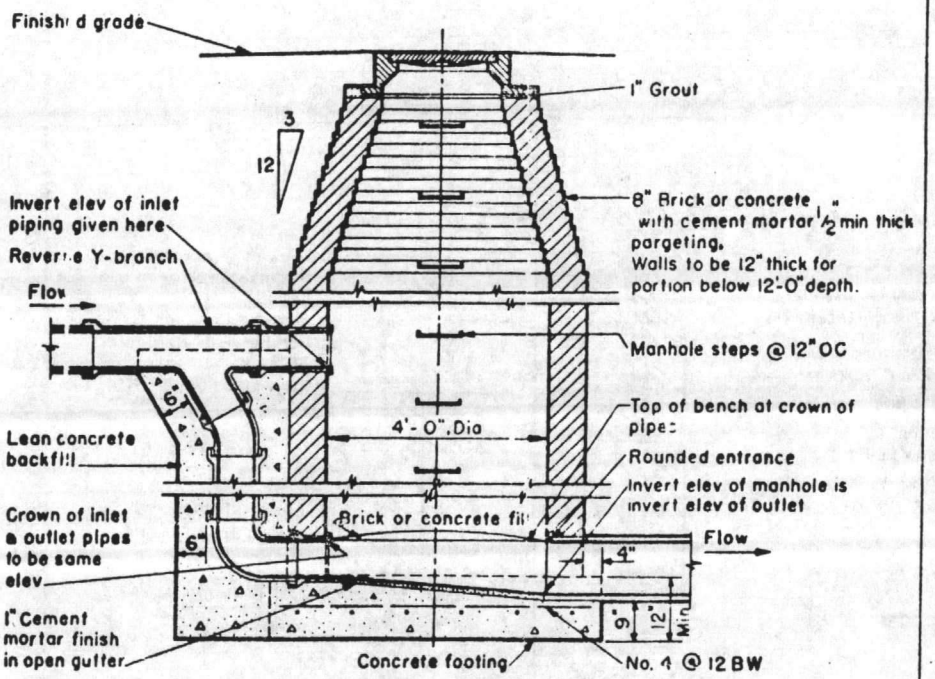

SECTION

STANDARD DROP MANHOLE

LANTDIV PLATE SS-2

05-77-7526
15301-7

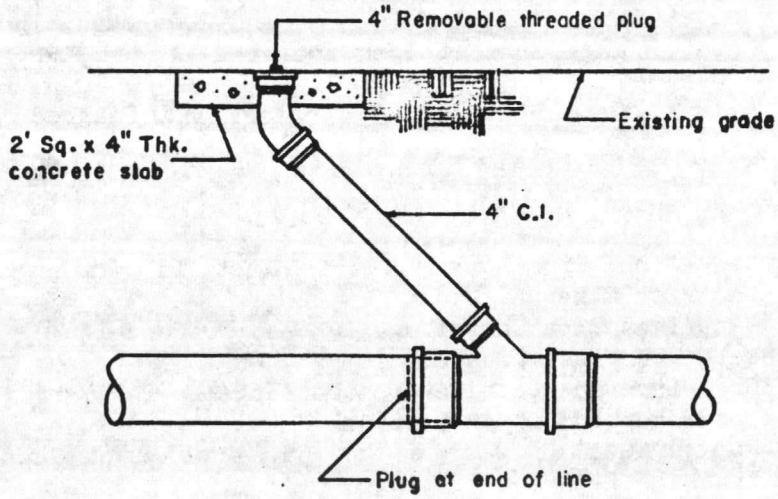

CLEANOUT DETAIL

NOT TO SCALE

LANTDIV PLATE SS-3

SECTION 15302. FORCE MAIN SEWERS

1. APPLICABLE PUBLICATIONS: The following publications of the issues listed below, but referred to elsewhere by basic designation only, form a part of this specification to the extent indicated by the references thereto:

1.1 Federal Specifications:

WW-P-421D	Pipe, Cast Gray and Ductile Iron, Pressure (for Water and Other Liquids).
WW-V-54D & Am 3	Valve, Gate, Bronze (125, 150, and 200-Pound; Threaded Ends, Flange Ends, Solder End, and Braced Ends, for Land Use).
WW-V-58B	Valves, Gate, Cast-iron; Threaded and Flanged (for Land Use).

1.2 American Water Works Association (AWWA):

C 106-75	Cast-iron Pipe Centrifugally Cast in Metal Molds, for Water or Other Liquids.
C 108-75	Cast-iron Pipe Centrifugally Cast in Sand-lined Molds, for Water or Other Liquids.
C 110-71	Gray-iron and Ductile-iron Fittings, 2 in. Through 48 in., for Water and Other Liquids.
C 111-72	Rubber Gasket Joints for Cast-iron and Ductile-iron Pressure Pipe and Fittings.
C 115-75	Flanged Cast-iron and Ductile-iron Pipe With Threaded Flanges.
C 151-76	Ductile-iron Pipe, Centrifugally Cast in Metal Molds or Sand-lined Molds, for Water or Other Liquids.
C 500-71	Gate Valves - 3 in. Through 48 in. - for Water and Other Liquids.

1.3 American National Standards Institute (ANSI):

A21.1-(1967)(R1972)	Thickness Design of Cast-iron Pipe.
A21.6-1975	Cast-iron Pipe Centrifugally Cast in Metal Molds for Water or Other Liquids.
A21.8-1975	Cast-iron Pipe Centrifugally Cast in Sand-lined Molds, for Water or Other Liquids.
A21.10-1971	Gray-iron and Ductile-iron Fittings, 2 in. Through 48 in., for Water and Other Liquids.
A21.11-1972	Rubber Gasket Joints for Cast-iron and Ductile-iron Pressure Pipe and Fittings.
A21.15-1975	Flanged Cast-iron and Ductile-iron Pipe With Threaded Flanges.
A21.51-1976	Ductile-iron Pipe, Centrifugally Cast in Metal Molds or Sand-lined Molds, for Water or Other Liquids.

1.2 American Water Works Association (AWWA): At the end of this paragraph add the following:

"C-600-64 Installation of Cast-iron Water Mains.
-900-75 Polyvinyl Chloride (PVC) Pressure Pipe, 4 In. Through 12 In. For Water."

1.4 LANTDIV Plates:

WD-1 Standard Thrust Blocks for Water Mains.

1.5 American Society for Testing and Materials (ASTM):

D1784-69	Rigid Poly(Vinyl Chloride) Compounds and Chlorinated Poly(Vinyl Chloride) Compounds.
D1869-66(1972)	Rubber Rings for Asbestos-Cement Pipe.
D2321-74	Underground Installation of Flexible Thermoplastic Sewer Pipe.

ts, The the ne, the eto.

Force main sewer piping within the sewage pump station and within the five-foot building line is specified in the section entitled "Sewage Pump Station." Trenching and backfilling are specified in the section entitled "Earthwork." Concrete work shall be in accordance with the section entitled "Cast-In-Place Concrete," using concrete with a compressive strength not less than 3,000 psi.

3. SUBMITTALS REQUIRED: Shop drawings, manufacturer's data and certificates for equipment, materials, finish, and pertinent details for each system shall be submitted and approved before procurement, fabrication or delivery of such items to the job site. Partial submission will not be acceptable. Descriptive data shall be annotated to show the specific model, type and size of each item the Contractor proposes to furnish. The submittal requirements of Section entitled "General Requirements, Mechanical" applies to the following lists. Items in the following lists (which are followed by (CO)) shall be approved by the Contracting Officer.

3.1 Manufacturer's Data:

(a) Valves (CO)
(b) Valve Boxes

3.2 Certificates: Submit certificates from the manufacturer attesting that each of the following items conform to all requirements of this specification and of reference publications.

(a) Pipe and Fittings, Joints, and Couplings
(b) Valves (CO)

4. MATERIALS:

4.1 Pipe: Delete the first sentence in this paragraph and substitute the following in lieu thereof: "Piping 4 inches in diameter and larger shall be either cast-iron, ductile-iron, or polyvinyl chloride (PVC) pressure pipe."

15302

4.1.1 Cast-iron pipe shall conform to the applicable requirements of WW-P-421 for Grade A, B, or C, as modified herein. Pipe shall be thickness Class 22 for cast gray iron pipe and thickness Class 50 for cast ductile iron pipe, except as otherwise specified for flanged pipe. Pipe shall have ends suitable for joints specified hereinafter.

"4.1.2 Polyvinyl chloride (PVC) pressure pipe shall conform to the applicable requirements of AWWA C-900. Pipe shall be pressure class 150 with cast iron pipe equivalent outside diameter."

(a) Gray cast-iron pipe shall conform to the applicable requirements of ANSI A21.6 (AWWA C106) or ANSI A21.8 (AWWA C108), except as modified by WW-P-421, minimum 150 PSI working pressure, outside coated, bituminous lined.

(b) Ductile-iron pipe shall conform to the applicable requirements of ANSI A21.51 (AWWA C151), except as modified by WW-P-421, minimum 150 PSI working pressure, outside coated, bituminous lined.

4.2 Fittings:

4.2.1 Fittings for cast gray and ductile iron pipe shall conform to the applicable requirements of ANSI A21.10 (AWWA C110) and may be either cast gray or ductile iron; fittings with push-on joint ends shall be as specified for bell-and-spigot joint ends except that bell design shall be modified, as approved, for push-on joints. Fittings shall have pressure rating at least equivalent to that of the pipe. Fittings shall have bituminous lining equivalent to that of the pipe lining.

4.3 Joints and Jointing Materials:

4.3.1 Cast Gray and Ductile Iron Pipe:

(a) Push-On Joints: Shape of pipe ends shall conform to the applicable requirements of WW-P-421 for Type II pipe. Conformation of ends for fittings shall conform to the applicable requirements of ANSI A21.11 (AWWA C111). Gaskets and lubricants for pipe and fittings shall conform to the applicable requirements of ANSI A21.11 (AWWA C111). Drawings of the joint and gasket shall be furnished.

(b) Mechanical Joints: Dimensional and material requirements for pipe ends, glands, bolts and nuts, and gaskets shall conform to the applicable requirements of ANSI A21.11 (AWWA C111) or to the applicable requirements specified for Type III pipe in WW-P-421.

4.4 Valves: Valves conforming to the same specification shall be of one make throughout the project.

4.4.1 Gate Valves:

(a) Gate Valves on Buried Piping: Valves shall have non-rising stems and shall be double-disc parallel seat type. Valves shall open by counterclockwise rotation of the valve stem. Valves shall have O-ring stem seals, except when gearing is specified, in which case conventional packing shall be used in lieu of O-ring seal. Stuffing boxes shall be bolted and constructed so as to permit the easy removal of parts for repairs.

"4.2.2 Fittings for polyvinyl chloride (PVC) pressure pipe shall be the same as specified hereinbefore for cast gray and ductile iron pipe."

"4.3.2 Polyvinyl chloride (PVC) pressure pipe: Jointing materials for pipe shall conform to the applicable requirements of ASTM D1869."

(1) Valves 3-Inch Size and Larger: Except as otherwise specified hereinafter, valves shall conform to AWWA C500. Valves shall have mechanical-joint or push-on joint ends and gaskets conforming to ANSI A21.11 (AWWA C111).

4.4.2 Air Release Valves: Air release valve shall be suitable for operating under a working pressure of 150 pounds per square inch. Each valve shall be of the type wherein a spherical float resting on the surface of the water within the valve casing opens or closes, by means of a lever movement, the air discharge vent hole. The valve casing shall be constructed in two sections of cast iron, both sections being of spherical design and each having an internal cast flange. The flange sections shall be bolted together with a sufficient number of heavy bolts and nuts to suit the operating and test pressure conditions, thus completing the entire valve casing. The upper spherical section of the casing shall have integrally cast with it a chamber within which the valve stem and valve seat will be assembled and the discharge opening through this chamber shall not exceed 9/32-inch in diameter. The spherical float shall be constructed of glass of sufficient strength to withstand the pressures to which it will be subjected and will be connected by means of a lever movement to the valve stem thereby providing opening and closing of the discharge port subject to the position of the float resting on the liquid within the valve chamber. The construction of the valve shall be such that there shall be an excess power in the float to insure opening of the valve port under high internal pressure and the design of the unit shall be such that it will not stick shut or leak water under continued long operating conditions. The valve shall be designed for sewage service and shall have incorporated with it a 2-inch pipe trap arrangement designed to act as a settling chamber of solid particles. This pipe trap arrangement shall be complete with a 1/2-inch shut-off valve and flushing disconnector seat to provide an approved temporary back flushing connection for cleaning the entire valve and pipe trap assembly.

4.5 Valve Boxes: Each gate valve on buried piping shall be provided with an adjustable cast-iron valve box of a size suitable for the valve on which it is to be used. Outside of paved areas boxes may be of plastic; such plastic valve boxes shall be constructed of ABS (Acrylonitrile-Butadiene-Styrene) plastic or of inorganic fiber reinforced black polyolefin plastic. The head shall be round and the lid shall have the letters "FM" cast on it. The least diameter of the shaft of the box shall be 5-/14 inches. Each cast-iron box shall be given a heavy coat of bituminous paint.

5. INSTALLATION OF PIPELINES:

5.1 Location of Force Main Sewers: Where the location of the force main is not clearly defined by dimensions on the project drawings, the force main shall not be laid closer horizontally than 10 feet from any water line. Water lines shall in all cases cross above sewer force mains and shall be not less than 2-feet above sewer line; joints in sewer line closer horizontally than 3-feet to the crossing shall be encased in concrete.

5.2 Handling: Pipe, fittings, valves, and other accessories shall be handled in such manner as to insure delivery to the trench in sound, undamaged condition. Special care shall be taken not to injure pipe coatings or linings. If coatings or linings of pipe and fittings are damaged, satisfactory repairs shall be made at no extra cost to the Government. Pipe shall be carried to the trench and not dragged. Rubber gaskets that are not to be installed immediately shall not be left in the sunlight, but shall be stored under cover out of direct sunlight.

5.3 Pipe Laying and Jointing: Pipe, fittings, valves and accessories will be carefully inspected before and after installation and those found defective will be rejected. Pipe and fittings shall be free from fins and burrs. Before being placed in position, pipe, fittings, valves and accessories shall be cleaned, and shall be maintained in a clean condition. Proper facilities shall be provided for lowering sections of pipe into trenches. Under no circumstances shall pipe, fittings, valves, or any other force main material be dropped or dumped into trenches. Pipe shall be cut accurately to measurements established at the site and shall be worked into place without springing or forcing. Piping that does not allow sufficient space for proper installation of jointing material shall be replaced by one of proper dimensions. Blocking or wedging between bells and spigots will not be permitted. Bell-and-spigot pipe shall be laid with the bell end pointing in the direction of laying. The pipe shall be graded in straight lines, taking care to avoid the formation of any dips or low points. Pipe shall be supported at its proper elevation and grade, care being taken to secure firm and uniform support. Wood support blocking will not be permitted. The full length of each section of pipe and fittings shall rest solidly on the pipe bed, with recesses excavated to accommodate bells, joints, and couplings. Anchors and supports shall be provided where necessary and where indicated on the project drawings for fastening work into place. Proper provision shall be made for the expansion and contraction of pipe lines. Trenches shall be kept free of water until joints have been properly made. Open ends of pipe at the end of each day's work shall be closed temporarily with wood blocks or bulkheads. Pipe shall not be laid when the conditions of trench or weather are unsuitable. Depth of bury shall be not less than 3 feet. Piping shall be inspected, tested, and approved before being completely buried, covered, or concealed. Excavation bedding and backfilling of pipe trenches shall be as specified in the section entitled "Earthwork", as modified herein.

5.4 Manufacturer's Recommendations: Where installation procedures or any part thereof are required to be in accordance with the recommendations of the manufacturer of the material being installed, printed copies of these recommendations shall be furnished to the Contracting Officer prior to installation. Installation of the item will not be allowed to proceed until the recommendations are received. Failure to furnish these recommendations can be cause for rejection of the material.

"5.5.2 Joints for polyvinyl chloride (PVC) pressure pipe shall be of the bell type designed for joint assembly using elastomeric-gasket type seals."

5.5 Joints:

5.5.1 Joints for Cast-Iron Pipe: Push-on and mechanical joints shall be made in accordance with the requirements of AWWA C600; mechanical joints shall further follow the "Notes on Installation of Mechanical Joints" given in ANSI A21.11 (AWWA C111).

5.6 Pipe Anchorage: Anchorage of buried pipe lines shall be by means of concrete thrust blocks (reaction backing), using concrete with a minimum compressive strength of 2000 PSI. All 1/16 and sharper bends, tees, and dead ends of pipe shall be securely blocked in the direction of flow with poured-in-place concrete bearing solidly against the pipe and affording a minimum of 3 square feet of bearing area against a vertical trench face for 3- and 4-inch pipe, and in accordance with LANTDIV Plate WD-1 for piping 6-inch diameter and larger. Plate WD-1 appears at the end of this section.

5.7 Setting Valves and Valve Boxes: Valves and valve boxes shall be set plumb, and centered, with valve boxes placed directly over the valves. Valve boxes shall, if possible, be located outside the area of the roads and streets. Earth fill shall be carefully tamped around the valve box to a distance of 4 feet on all sides of the box, or to the undisturbed trench face if less than 4 feet. Valves shall have the interiors cleaned of all foreign matter before installation. Stuffing boxes shall be tightened and the valve shall be inspected in opened and closed positions to see that all parts are in working condition.

5.8 Warning Tapes in Earth Trenches: For the purpose of early warning and identification of buried pipes during future trenching or other excavation, continuous identification tapes shall be provided in the trench. Tape shall be non-magnetic plastic tape or aluminum foil plastic backed tape manufactured for the purpose of early warning and identification of utilities buried below the tape. Tape shall be at least 3 inches in width. Color of tape shall be as standard with the manufacturer with respect to the type of utility buried below the tape. Tape shall have lettering at least 1 inch high with not less than the following identification on the tape: "BURIED SEWER LINE BELOW". Tape shall be installed in accordance with the printed recommendations of the tape manufacturer, as modified herein. Tapes shall be buried at a depth of 6 inches below the top surface of earth; in pavements this 6 inches shall be measured from the top of the subgrade.

6. IDENTIFICATION TAGS AND PLATES: Valves shall be provided with tags or plates numbered and stamped for their usage. Plates and tags shall be of brass or suitable nonferrous material and shall be securely mounted or attached.

"5.9 Special Installation Requirements: Cast-iron and ductile iron pipe shall be installed in accordance with AWWA C-600 except as modified herein. Polyvinyl chloride (PVC) pressure pipe shall be installed in accordance with ASTM D2321 except as modified herein.

5.10 Wire Tracer for Nonmetallic Pipe: The full length of runs of nonmetallic pipe, if used, shall be provided with a continuous bare copper or aluminum wire, not less than 0.10 inch in diameter, which will provide means of location of pipes with an electronic metal detector applied at the ground surface above the pipe. Wire shall be secured to the pipe sufficiently to insure that the wire remains in place during construction operations."

7. FIELD TESTING AND INSPECTION:

7.1 General: All work shall be proved to be in first class condition and constructed properly in accordance with the drawings and specifications. All defects and leaks disclosed by the tests shall be corrected. Piping shall not be completely buried, covered, or concealed until it has been inspected, tested, and approved, except when procedure is modified by the referenced installation and testing standard.

7.2 Field Tests: Hydrostatic pressure for pressure test shall be 50 percent in excess of the maximum working pressure of the system, but shall be not less than 100 psi and shall be held for a minimum of one hour. Prior to the pressure test, that portion of the force main being tested shall be filled with water for a soaking period of not less than 24 hours. Hydrostatic pressure for leakage test for all systems shall be the maximum working pressure of the system, except as otherwise specified hereinafter. Leakage test may be performed at the same time and at the same test pressure as the pressure test. Pipe, joints, valves and fittings in the test section shall be examined. Equipment shall be tested in operation to demonstrate compliance with specification requirements. All valves shall be fully opened and closed under water pressure. Appliances, water and equipment for testing shall be furnished by the Contractor at his own expense, and the system tested until proved satisfactory. The Contractor shall submit a certificate similar to that specified in NFPA 24 with a request for a formal inspection at least two working days prior to the date the inspection is to take place. At this inspection, any or all of the required tests shall be repeated as required.

7.2.1 Testing for cast-iron pipelines shall be in accordance with AWWA C600, except as specified otherwise herein. The amount of leakage on lines with push-on or mechanical joints shall not exceed the amounts given in AWWA C600.

7. FIELD TESTING AND INSPECTION:

7.2 Field Tests: At the end of this paragraph add the following:

"7.2.2 Testing of polyvinyl chloride (PVC) pressure pipe shall be in accordance with AWWA C600, except as otherwise specified hereinbefore. The amount of leakage shall not exceed the amounts given in AWWA C-600 for push-on or mechanical joints."

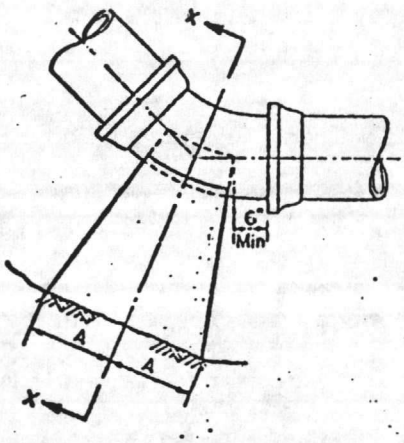

PLAN
BENDS

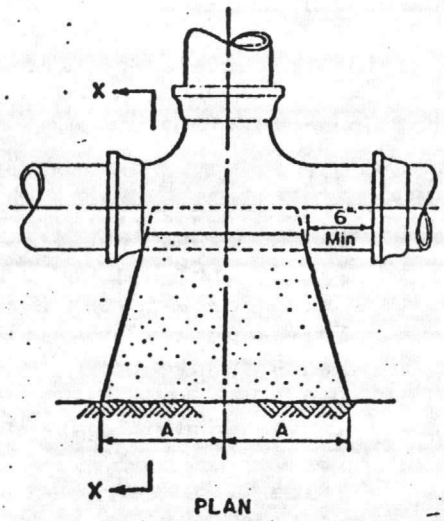

PLAN
TEES

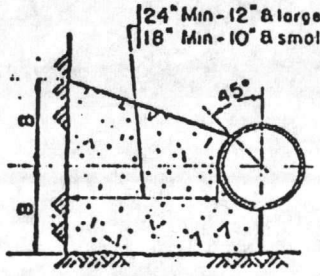

SECTION X-X
BENDS & TEES

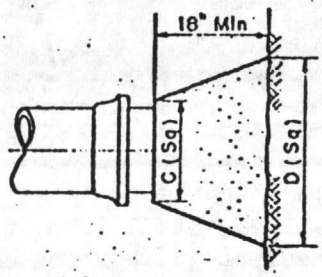

PLAN & ELEVATION
PLUGS

SIZE	1/4 BENDS		1/8 BENDS		1/16 BENDS		TEES		PLUGS	
	A	B	A	B	A	B	A	B	C	D
6"	16"	10"	9"	10"	6"	8"	10"	12"	10"	21"
8"	22"	13"	12"	13"	8"	10"	13"	16"	12"	29"
10"	26"	17"	14"	17"	10"	13"	16"	20"	14"	36"
12"	29"	21"	16"	21"	11"	16"	18"	24"	16"	41"
14"	35"	24"	19"	24"	12"	20"	22"	27"	18"	48"
16"	38"	27"	21"	27"	12"	24"	24"	30"	20"	54"

NOTE: Based on 100 p.s.i. static pressure plus A.W.W.A. water hammer
All bearing surfaces to be carried to undisturbed ground

STANDARD THRUST BLOCKS FOR WATER MAINS

LANTDIV PLATE WD-1

SECTION 15350. SEWAGE PUMP STATION

1. APPLICABLE PUBLICATIONS: The following publications of the issues listed below, but referred to elsewhere by basic designation only, form a part of this specification to the extent indicated by references thereto:

1.1 Federal Specifications:

WW-P-421D	Pipe, Cast Gray and Ductile Iron, Pressure (For Water and Other Liquids).
WW-V-51E & Am 2	Valve, Angle, Check, and Globe, Bronze (125, 150 and 200 Pound, Threaded Ends, Flange Ends, Solder Ends, and Brazed Ends, For Land Use).
WW-V-54D & Am 3	Valve, Gate, Bronze (125, 150, and 200 Pound; Threaded Ends, Flange Ends, Solder Ends, and Brazed Ends. For Land Use).
WW-V-58B	Valves, Gate, Cast-Iron; Threaded and Flanged (For Land Use).
RR-F-621B	Frames, Covers, Gratings, Steps, Sump and Catch Basin. Manhole.

1.2 Military Specifications:

MIL-V-18436C(2)	Valves, Check: Bronze, Cast-Iron, and Steel Body.

1.3 American Society for Testing and Materials (ASTM):

A48-74	Gray Iron Castings.
A120-73	Black and Hot-Dipped Zinc-Coated (Galvanized) Welded and Seamless Steel Pipe for Ordinary Uses.
B 61-74	Steam or Valve Bronze Castings.
B 62-74	Composition Bronze or Ounce Metal Castings.
B 88-76	Seamless Copper Water Tube.

1.4 American Water Works Association (AWWA):

C 106-75	Cast-Iron Pipe Centrifugally Cast in Metal Molds, For Water or Other Liquids.
C 108-75	Cast-Iron Pipe Centrifugally Cast in Sand-lined Molds, For Water or Other Liquids.
C 110-71	Gray-Iron and Ductile-Iron Fittings, 2 in. Through 48 in., For Water and Other Liquids.
C 111-72	Rubber Gasket Joints for Cast-Iron and Ductile Iron Pressure Pipe and Fittings.
C 115-75	Flanged Cast-Iron and Ductile-Iron Pipe with Threaded Flanges.
C 151-76	Ductile-Iron Pipe, Centrifugally Cast in Metal Molds or Sand-Lined Molds, For Water or Other Liquids.
C 500-71	Gate Valves - 3 in. Through 48 in. - For Water and Other Liquids.

1.5 Underwriters' Laboratories (UL):

UL 194	The Performance of Gasketed Joints for Cast-Iron Pressure Pipe and Fittings, May 1973.

1.6 American National Standards Institute (ANSI):

A21.1-(1967)(R1972)	Thickness Design of Cast-Iron Pipe.
A21.6-1975	Cast-Iron Pipe Centrifugally Cast in Metal Molds for Water or Other Liquids.
A21.8-1975	Cast-Iron Pipe Centrifugally Cast in Sand-Lined Molds, For Water or Other Liquids.
A21.10-1971	Gray-Iron and Ductile-Iron Fittings, 2 in. Through 48 in., For Water and Other Liquids.
A21.11-1972	Rubber Gasket Joints for Cast-Iron and Ductile-Iron Pressure Pipe and Fittings.
A21.15-1975	Flanged Cast-Iron and Ductile-Iron Pipe with Threaded Flanges.
A21.51-1976	Ductile-Iron Pipe, Centrifugally Cast in Metal Molds, For Water or Other Liquids.
B2.1-1968	Pipe Threads.
B16.3-1971	Malleable Iron Screwed Fittings, 150 and 300 Pound.
B16.18-1973	Cast Bronze Solder-Joint Pressure Fittings.
B16.22-1973	Wrought Copper and Bronze Solder-Joint Pressure Fittings.
B16.26-1975	Cast Copper Alloy Fittings for Flared Copper Tubes.

2. GENERAL REQUIREMENTS: Section entitled "General Requirements, Mechanical" also applies to this Section except as specified otherwise. The work includes the provision of sewage pumping equipment, controls, piping and appurtenances. The principal items of equipment shall include two vertical motor driven non-clog sewage pumps, valves, internal piping, central control panel with fused switches, motor starters, automatic control system, sump pump, and comminutor.

3. SUBMITTALS REQUIRED: Shop drawings, manufacturer's data and certificates for equipment, materials, finish, and pertinent details for each system shall be submitted and approved before procurement, fabrication or delivery of such items to the job site. Partial submission will not be acceptable. Descriptive data shall be annotated to show the specific model, type and size of each item the Contractor proposes to furnish. The submittal requirements of the Section entitled "General Requirements, Mechanical" applied to the following lists. Items in the following lists which are followed by (CO) shall be approved by the Contracting Officer:

3.1 Manufacturer's Data:

(a) Frames and Covers
(b) Valves (CO)
(c) Pumps (CO)

(d) Control Systems (CO)
(e) Comminutor (CO)

3.2 Certificates: Submit certificates from the manufacturer attesting that each of the following items conforms to all requirements of this specification and of reference publications.

(a) Pipe, and Pipe Fittings and Joints
(b) Frames and Covers
(c) Valves (CO)
(d) Pumps (CO)
(e) Comminutor (CO)

4. MATERIALS:

4.1 Vertical Centrifugal Non-Clog Flexible Coupled Sewage Pumps:

4.1.1 Pumps: Pumps shall be flexible coupled non-clog sewage pumps. Each pump shall be designed for a capacity of 500 GPM against 40 feet total dynamic head.

4.1.2 Motors: Each pump shall be driven by 10 HP, 1150 RPM motor of the vertical flexible coupled ball bearing type, open drip-proof, NEMA Design B, nameplate voltage rating of 460, 3 phase, 60 Hz., with a service factor of 1.15.

4.1.3 Pump Construction: The pumps shall be constructed of cast iron conforming to ASTM A48, Class 30, which shall include cast iron for the pump support, suction cover, pump casing, impeller, stuffing box cover, and bearing frame. All pipe flanges shall be faced, drilled, and to the thickness required for compliance with 125-pound American Standard.

4.1.4 Pump Casing: The pump casing shall be of the volute type and made of cast iron. The casing shall be cast in one piece with an integral discharge nozzle. A hand hole shall be provided near the discharge flange for inspection and cleaning. A tap shall be provided on the top and bottom of the discharge nozzle adjacent to the discharge flange for venting, draining, and gauge connections. The casing shall be accurately machined to fit the suction and stuffing box cover assemblies.

4.1.5 Impeller: The impeller shall be cast in one piece and each impeller shall be an enclosed two-port type, made of high strength cast iron. The impeller shall pass a three inch sphere. The impeller hub shall be provided with a keyway and key, so that it will be locked to the pump shaft, and maintain this position by a self-locking impeller nut.

4.1.6 Wearing Rings: Impeller and casing wearing rings shall be butt type on the suction side and radial type at the stuffing box cover. The rings shall be constructed of stainless steel.

4.1.7 Seal Box: The seal box shall be made of cast iron and accurately machined to fit the pump casing. The seal box shall be fitted with a double mechanical seal of the end face type having the carbon surface rotating against a ceramic seat. The seal box shall have a vent connection and fitting which should be opened briefly at the time of the initial start-up to permit any entrapped air to escape. The seal box is supplied with a water seal line from the pump discharge. The line shall have a shut-off valve and 50 micron filter to prevent impurities from entering the seal cavity.

4.1.8 Pump Shaft: The pump shaft shall be high-strength carbon steel, accurately machined, and of sufficient size to carry maximum loads imposed. It shall be protected from the pumped liquid by an impeller hub with replaceable stainless steel sleeve.

4.1.9 Bearing Frame: The bearing frame shall be of cast iron and shall be equipped with a combination radial and thrust bearing. The upper, or outboard bearing, shall be the thrust bearing and shall carry the impeller-shaft load and the axial thrust. The lower, or inboard, bearing shall carry the radial thrust. The bearings shall be grease lubricated and allow for forcing out old grease. The bearing housing shall be dust and moisture resistant. The lower or inboard bearing shall be protected from seal box leakage by the use of a rubber water deflector. The seal box and the bearing frame shall be of one assembly, accurately machined, centered, and bolted to the pump casing. Construction shall be such that the entire rotating assembly may be removed without disturbing the suction or discharge piping. For a close and accurate running clearance, adjustment of the impeller is made by a collar threaded into the bearing housing. Shims shall not be used to make impeller adjustments.

4.1.10 Pump Support: The pump support shall be of high strength cast iron and equipped with a suction elbow cast integrally with the pump support. The pump suction elbow shall be furnished with an access handhole with a contoured cover. The pump support shall be designed to support the pump assembled weight and safely withstand all stresses imposed thereon by vibrations, shock, and all possible direct and eccentric loads.

4.1.11 Intermediate Shafting: Shafting between the pump and motor floor shall be of the flexible type, with flanged universal joints having grease-lubricated bearings. The shaft shall be provided with a slip spline which will permit the removal of the pump shaft and impeller without removing any section of intermediate shafting or any intermediate bearings, and without removing the suction or discharge piping. Intermediate shafting shall be provided with guards complying with the OSHA.

4.1.12 Motor Support: The motor support shall be high stength cast iron, sized to properly support the motor without undue vibration when operating at maximum design speed.

4.2 Sump Pump:

4.2.1 Pump: Pump shall be a heavy-duty submersible sump pump with cast volute and base of cast iron. Bronze two blade impeller shall be dynamically balanced and threaded on the shaft. Pump shall be designed to discharge 20 GPM at 20 feet TDH.

4.2.2 Motor: Submersible 1/3 hp, 1750 RPM, 120 volt, 60 Hz., single phase.

4.2.3 Liquid Level Control: The liquid level control shall be designed for direct switching of pump. The unit shall consist of separate mercury float switches for the on and off levels. The floats shall be connected to a control box that has a male plug for plugging into a standard three-wire grounded outlet. A female socket in the control box receives the plug from the pump and provides complete automatic on and off operation. Both floats and control box shall be made of tough, hard, rigid plastic resistant to attack by inorganic salt solutions, alkalies, and mineral acids. A mercury switch with molybdenum contacts is sealed in each double-walled float enclosure. The electrical cable shall be extra flexible, three conductor, with neoprene jacket, 8 feet long. The control box shall have a three-prong male plug for attaching to the power supply and a grounded female socket into which a manually operated pump is plugged. A heavy duty contactor with 90 ampere lock rotor rating shall be mounted in the control box for switching pump motor load. A releasable plastic strap shall be used to secure each float in position to the pump discharge pipe.

4.3 Pipe: Piping 4 inches in diameter and larger shall be cast iron. Piping 3 inches in diameter shall be either cast iron or galvanized steel. Piping less than 3 inches shall be galvanized steel.

4.3.1 Cast-iron pipe shall conform to the applicable requirements of WW-P-421 for Grade A, B, or C, as modified herein. Pipe shall be thickness Class 22 for cast gray iron pipe and thickness Class 50 for cast ductile iron pipe, except as otherwise specified for flanged pipe. Pipe shall have ends suitable for joints specified hereinafter.

a. Gray cast-iron pipe shall conform to the applicable requirements of ANSI A21.6 (AWWA C106) or ANSI A21.8 (AWWA C108), except as modified by WW-P-421, and except that flanged pipe shall conform to ANSI A21.15 (AWWA C115) minimum 150 PSI working pressure, outside coated, bituminous lined.

b. Ductile-iron pipe shall conform to the applicable requirements of ANSI A21.51 (AWWA C151), except as modified by WW-P-421, and except that flanged pipe shall conform to ANSI A21.15, minimum 150 PSI working pressure, outside coated, bituminous lined.

4.3.2 Galvanized steel pipe shall conform to the applicable requirements of ASTM A120, Schedule 40.

4.4 Fittings:

4.4.1 Fittings for cast gray and ductile iron pipe shall conform to the applicable requirements of ANSI A21.10 (AWWA C110) and may be either cast gray or ductile iron. Fittings shall have pressure rating at least equivalent to that of the pipe. Fittings shall have lining equivalent to that of the pipe lining.

4.4.2 Fittings for galvanized steel pipe shall be 150-pound galvanized malleable iron banded type conforming to ANSI B16.3.

4.5 Joints and Jointing Materials:

4.5.1 Cast Gray and Ductile Iron Pipe: Ends of pipe and fittings shall be provided with cast-iron flanges conforming to the applicable requirements of ANSI A21.15. Bolts, nuts, and gaskets for flanged connections shall conform to the recommendations in the Appendix to ANSI A21.15. Gaskets shall be plain rubber, 1/8-inch thick.

4.5.2 Galvanized Steel Pipe: Ends of pipe shall be provided with threads in accordance with the gauging practice and tolerances of ANSI B2.1.

4.6 Valves: Valves conforming to the same specification shall be of one make throughout the project.

4.6.1 Gate Valves:

a. Valves 3-inch Size and Larger: Valves shall conform to WW-V-58. Valves shall be of the outside-screw-and-yoke configuration. Valves shall have flanged ends unless otherwise indicated or otherwise specified herinafter. Valves conforming to WW-V-58 shall be Type II, Class 1.

b. Valves Smaller Than 3-inch Size: Valves shall conform to either WW-V-54 or WW-V-58. Valves conforming to WW-V-54 shall be Type III, Class A. Valves conforming to WW-V-58 shall be Type II, Class 1. Valves shall have threaded ends.

4.6.2 Check Valves:

a. Check Valves 3-inch Size and Larger: Valves shall conform to MIL-V-18436. Valves shall have flanged ends. Swing-check valves shall have clear-port opening. Valves conforming to MIL-V-18436 shall be Type III, shall have cast-iron or steel bodies with bronze trim, and shall be designed for a hydraulic working pressure of 175 psi.

b. Check Valves Smaller Than 3-inch Size: Valves shall conform to either WW-V-51 or MIL-V-18436. Valves shall have threaded ends. Valves conforming to WW-V-51 shall be Type IV, Class A. Valves conforming to

MIL-V-18436 shall be Type III, shall have cast-iron or steel bodies with bronze trim, and shall be designed for a hydraulic working pressure of 175 PSI.

c. Check Valve Limit Switches: Check valve limit switches as specified under paragraph 4.7.2.1 herein shall be installed by the manufacturer of the check valve.

4.7 Duplex Pump Motor Control Center:

4.7.1 General: In the seventh line change "960 volt" to "460 volt".

4.7.1 General: A NEMA Type I, dead-front enclosure, fabricated of steel shall house all control equipment. The panel shall be fully gasketed and dust-tight. The power section of the panel including all switches and motor starters shall have a hinged cover with 1/4 turn latching devices. Fused switches, motor starters, reset buttons, and pump control H.O.A. switches will be surface-mounted for accessible operation without opening the power panel. Provide an integral 960 volt to 120 volt control power transformer. Minimum size of control power transformer shall be 1.5 KVA. The low voltage and pneumatic pump control section shall be enclosed in a hinged section of the panel and isolated from the high voltage section. All pneumatic control equipment shall be completely adjustable from exterior of panel. All low voltage control wiring and pneumatic piping shall be accessible by a hinged cover covering the control section. It shall not be necessary to open this section except for trouble shooting control wiring or pneumatic piping. All external wiring will terminate behind this panel. A grounding type convenience outlet shall be provided for operation of 115 volt A.C. devices and shall be protected by a 15 amp breaker.

a. Heavy-Duty Fused Switches using RK-5 fuses shall be provided for branch disconnect service and overcurrent protection of all motors, controls and auxiliary equipment. Magnetic across-the-line starters and under voltage release and overload coils for each phase shall be provided for each pump motor to give positive protection against single phasing. All equipment control switches shall be labeled and a color coded wiring diagram shall be provided. Color coding shall be in accordance with the requirements of Section 16000.

4.7.2 Control and Auxiliary Contacts for Remote Monitoring: This unit shall provide pilot contacts to energize motor starters and status and alarm contacts to a terminal cabinet.

4.7.2.1 Functional Operation: Liquid level in the pump station shall be sensed by purging air into the wet well through a bubbler tube and measuring back pressure to determine liquid level. The control shall be complete with air regulating assembly, 4-1/2 inch level gauge, built-in air compressor, and the necessary pressure switches and relays to operate the pumps in accordance with the following schedule:

Rising Level

Elevation	Start Pump	Stop Pump
- 4.60	Lead	
- 4.35	Lag	
- 4.10	High Alarm	

Falling Level

Elevation	Start Pump	Stop Pump
- 5.58		Lag
- 6.25		Lead

A solid-state two-pump alternator shall automatically alternate the pumps after each pumping cycle to equalize wear. Alternator shall contain sequence selector switch to override alternator operation if desired and select either pump as lead.

In addition, control shall sense failure of pumps to operate when called for. A check valve limit switch shall be supplied and installed to determine if the pump has operated when called for. The control panel shall contain a time delay and manual reset for each pump to operate in conjunction with each pump. If the pump check valve does not operate within a preset time, the time delay shall elapse locking out the pump and requiring a manual reset to restart the pump.

The control panel shall also contain auxiliary contacts that are wired to a terminal strip and labeled as to function for the following status and alarm functions:

1. Pump No. 1 running.
2. Pump No. 2 running.
3. Pump No. 1 failure.
4. Pump No. 2 failure.
5. High wet well level.
6. Low air pressure (sensed by pressure switch on air compressor).
7. Power failure.

4.7.2.2 Pressure Assembly Modules: Pressure assemblies shall be of a modular design mounted on a removable plated chassis approximately 10 inches wide and 8-1/2 inches high. The pressure mechanism shall be of the type consisting of a phosphur bronze bellows with lever and weight assembly to accurately transfer pressure changes in the system through a rotating disc assembly to dust-tight mercury switches. Each rotating lever and hub shall be equipped with an enclosed ball bearing to maintain maximum repeatability of original settings for extended periods of time. Each control point shall be controlled by an individual mercury switch mounted on an adjustable switch holder. Start and stop mercury switches for any step shall be mounted on the same disc assembly to provide a completely fixed relationship between starting and stopping.

4.7.2.3 Level Gauge: A 4-1/2 inch diameter flush level gauge shall be mounted in front panel of the control cabinet and be calibrated for direct level reading. The system shall be equipped with shutoff and bleed valves to simulate liquid level conditions when making level adjustments.

4.7.2.4 Purge Meter: Rate of purging shall be controlled by a purge meter with needle valve control and differential pressure regulator. This unit shall maintain a constant rate of purging for any given adjustment of the needle valve control. Air flow shall be unaffected by changes in back pressure or pressure fluctuation in the air storage tank. Regulator shall be adjusted to 0.3 cfh for initial field operation, and this rate shall be indicated on the purge meter.

4.7.2.5 Compression Bell: A 12 inch diameter compression bell shall be installed in wet well at the end of the purged air line. The compression bell shall have sufficient capacity to maintain operation for three days if normal air supply should fail and must be designed to prevent plugging of the air line.

4.7.2.6 Two Circuit Alternator: The two circuit alternator shall be a solid-state device driving a switching relay. The alternator shall allow one or both pumps to operate as called for by the primary control devices. Failure of the electronic portion of the device shall not prevent both pumps from operating as required. A built-in selector switch shall allow manual selection of either pump as lead or automatic alternation after each pumping cycle.

4.7.3 Manufacturer's Services: The services of a factory-trained, qualified service representative of the equipment manufacturer shall be provided to inspect the complete equipment installation to insure that it is installed in accordance with the manufacturer's recommendations, make all adjustments necessary to place the system in trouble-free operation, and give one 8-hour day of instruction to the operating personnel in the proper care and operation of the equipment furnished.

4.8 Suction and Discharge Pressure Gauges: Pressure gauges shall be mounted on the suction and discharge side of the pump equipped with a gauge cock and pulsation dampener to allow direct pressure readings from the pump system. The pressure gauge shall be 4-1/2" diameter Bourdon tube type, calibrated in PSIG. The suction gauge shall be 0-15 PSI and the discharge gauge shall be at least 10% above operating PSI at design conditions. The gauge cock shall allow the gauge to be disconnected from the pump until readings are desired. The pulsation dampener shall allow readings to be made within two (2) increments of gauge movement at design conditions.

4.9 Comminutor: The motor driven comminutor shall continuously screen and comminute solids in the raw sewage flow. The comminutor shall reduce the solids to a size that will pass through 1/4-inch slots in a continuous, single direction, rotating drum. The comminutor shall be designed to screen and comminute a flow of 0.75 MGD and not allow overflow of uncut solids. The cutting elements shall extend over the entire height of the drum screen and stationary casting. The total screen area shall not be less than 256 square inches. The comminutor shall have three types of cutting elements to achieve the required comminution. The stationary comb-bar sections shall be of hardened stainless steel. Shear-bar sections shall be hardened stainless steel and shall be integrally mounted on the rotating drum. Cutting teeth shall be high abrasive stellite alloy and pass through the stationary comb sections. The cutting teeth shall be effectively spaced and staggered on the entire rotating drum assembly. All cutting elements shall be individually replaceable. The gear motor shall be 1/2 hp, 460 volt, three phase, 60 Hz., of totally enclosed (explosion-proof) design. The gear-motor drive arrangement shall be standard height with gear-motor mounted directly to the comminutor. Comminutor shall be complete with steel bulkhead and overflow screen, return bend assembly, and spare cutters, combs, shear bars, a set of special tools, and maintenance instructions.

4.9.1 Steel Bulkhead and Overflow Screen: The combination steel bulkhead and overflow screen shall be furnished as one complete shop assembled unit, including bulkhead anchor and comminutor anchor bolts.

4.9.2 Return Bend Assembly: The Comminutor return head assembly shall be constructed of steel components and hot-dipped galvanized after fabrication. Anchor bolts shall be electri-galvanized.

5. INSTALLATION: All equipment and materials shall be installed in accordance with the manufacturer's instructions and the approved shop drawings.

6. FIELD TESTING: The completed pump station shall be given a running test of all equipment to check for excessive vibration, leaks in all piping, correct operation of control system and of auxiliary equipment. All defects shall be corrected by the Contractor at his own expense and additional tests made until it has been demonstrated that the systems comply with all contract

documents. All appliances and equipment for testing shall be furnished by the Contractor and all expenses, in connection with the tests, shall be defrayed by him. Water for testing will be furnished by the Government.

---END---

SECTION 15401. PLUMBING

1. APPLICABLE STANDARDS: The publications listed below, but referred to thereafter by basic designation only, form a part of this specification to the extent indicated by the references thereto:

1.1 Federal Specifications:

W-H-196J & Am 1	Heaters, Water, Electric and Gas Fired, Residential.
GG-G-76D	Gages, Pressure and Vacuum Dial Indicating.
GG-T-321C & Am 1	Thermometers, Self-Indicating, Liquid in Glass for Machinery and Piping Systems.
OO-D-566 & Am 3	Dispensers, Drinking Water, Mechanically Cooled.
QQ-C-40 & Am 2	Calking, Lead Wool and Lead Pig.
QQ-S-571E & Am 2	Solder, Tin Alloy, Lead Tin Alloy, and Lead Alloy.
WW-H-191B	Heaters, Water; Steam Heated (Instantaneous Type).
WW-N-351C & Am 1	Nipple, Pipe, Threaded.
WW-P-421D	Pipe, Cast Gray and Ductile Iron, Pressure.
WW-P-541D/GEN & Am 1	Plumbing Fixtures (General Specification).
WW-P-541/1A & Am 1	Plumbing Fixtures (Water Closets) (Detail Specifications).
WW-P-541/2A	Plumbing Fixtures (Urinals) (Detail Specifications).
WW-P-541/3A	Plumbing Fixtures (Bathtubs) (Detail Specifications).
WW-P-541/4A	Plumbing Fixtures (Lavatories) (Detail Specifications).
WW-P-541/5A	Plumbing Fixtures (Sinks, Kitchen and Service; and Laundry Tub) (Detail Specifications).
WW-P-541/7B & Am 1	Plumbing Fixtures (Shower Bath and Heads; and Water Control Valves) (Detail Specifications).
WW-U-531E	Unions, pipe, steel or malleable iron (Threaded Connection).
WW-V-51F	Valves, Bronze; Angle, Check and Globe (125, 150 and 200 Pound; Threaded, Flanged and Solder).
WW-V-54D & Am 3	Valves, Bronze; Gate (125, 150, and 200 Pound; Threaded, Flanged and Solder).
WW-V-58B	Valves, Gate, Cast-Iron, Threaded and Flanged.
WW-V-1967 & Am 1	Valves, Butterfly (Threaded Ends and Soldered Ends).

1.2 Military Specifications:

MIL-T-12295D	Tanks, Hot-Water Storage.
MIL-H-12322C	Heaters, Water; Steam and Hot-Water Heated.
MIL-V-13612D	Valves, Relief, Pressure and Temperature (For Hot Water Supply Systems.

MIL-G-15840C & Am 1	Garbage Disposal Machines.
MIL-P-16077A	Pump, Centrifugal, Water circulating, Electric-Motor Driven.
MIL-S-16293F	Strainers, Sediment, Pipeline.
MIL-P-17552C & Am 2	Pumps, Centrifugal, Water, Horizontal; General Service and Boiler Feed; Electric Motor or Steam Turbine Power Driven.
MIL-V-18146A	Vales, Pressure Regulating, Water.
MIL-M-18294B	Meters, Fluid Quanity Volumetric.
MIL-T-18361C	Traps, Grease, Waste Water.
MIL-V-18433B	Valves, Temperature Regulating (Thermostatically Controlled).
MIL-V-18436C & Am 1	Valves, Check; Bronze, Cast-Iron and Steel Body.
MIL-V-18826A	Valves, Globe and Angle, Cast Iron.
MIL-P-21214A	Pumps, Centrifugal, Vertical Sump, Electrical Motor Driven, Automatic Wet Pit Type.
MIL-P-21251B	Pumping Units, Sewage, Duplex, Automatic, Wet Pit Type.
MIL-P-22561B	Pipe and Pipe fittings, Acid Resistant.

1.3 American National Standards Institute (ANSI):

A21.10-71	Gray-Iron and Ductile-Iron Fittings, 2-Inch Through 48-Inch.
A21.11-72	Rubber Gasket Joints for Gray-Iron and Ductile-Iron Pressure Pipe and Fittings.
A40.8-55	National Plumbing Code.
A112.26.1-69 (R75)	Water Hammer Arresters.
B2.1-68	Pipe Threads (Except Dryseal).
B16.1-75	Cast-Iron Pipe Flanges and Flanged Fittings.
B16.3-71	Malleable-Iron Threaded Fittings, 150 and 300 Pounds.
B16.5-73	Steel Pipe Flanges, Flanged Valves and Fittings.
B16.12-77	Cast-Iron Threaded Drainage Fittings.
B16.18-72	Cast-Bronze Solder-Joint Pressure Fittings.
B16.22-73	Wrought Copper and Bronze Solder-Joint Pressure Fittings.
B16.23-76	Cast Copper Alloy Solder Joint Drainage Fittings - DWV.
B16.29-73	Wrought Copper and Wrought Copper Alloy Drainage Fittings.
Z124.1-74	Plastic Bathtub Units.
Z124.2-67	Gel-Coated Glass Fiber Reinforced Polyester Resin Shower Receptor and Shower Stall Units.

1.4 American society for Testing and Materials (ASTM):

A47-77	Malleable Iron Castings.
A53-76	Welded and Seamless Steel Pipe.
A74-75	Cast-Iron Soil Pipe and Fittings.
A120-77	Black and Hot Dipped Zinc-Coated (Galvanized) Welded and Seamless Steel Pipe.
A126-73	Gray Iron Castings for Valves, Flanges, and Pipe Fittings.

A183-68	Heat Treated Carbon Steel Track Bolts and Carbon Steel Nuts.
A536-77	Ductile Iron Castings.
B88-76	Seamless Copper Water Tube.
B306-76	Copper Drainage Tube (DWV).
B543-76A	Welded Copper and Copper Alloy Tube.
C564-74	Rubber Gaskets for Cast-Iron Soil Pipe and Fittings.
D1784-69	Rigid Poly (Vinyl chloride) Compounds and Chlorinated Poly (Vinyl Chloride) Compounds.
D1785-76	Poly (Vinyl Chloride) (PVC) and Chorinated Poly (Vinyl Chloride) (CPVC) Plastic Pipe, Schedules 40, 80 and 120.
D1788-73	Rigid Acrylonitrile-Butadiene-Styrene (ABS) Plastics.
D2000-77A	Classification System for Elastomeric Materials for Automotive Applications.
D2467-76A	Socket Type Poly (Vinyl Chloride (PVC) and Chlorinated Poly (Vinyl Chloride) (CPVC) Plastic Pipe Fittings, Schedule 80.
D2661-77	Acrylonitrile-Butadiene-Styrene (BS) Plastic Drain, Waste and Vent Pipe and Fittings.
D2665-76	Poly (Vinyl Chloride) (PVC) Plastic Drain, Waste and Vent Pipe and Fittings.
D2846-73	Chlorinated Poly (Vinyl Chloride) (CPVC) Plastic Hot Water Distribution Systems.

1.5 American Water Works Association (AWWA):

C203-73	Coal Tar Enamel Protective Coatings for Steel Water Pipe Lines, Enamel and Tape, Hot Applied.
C600-64	Installation of Cast Iron Water Mains.
C601-68	Disinfecting Water Mains.

1.6 Cast-Iron Soil Pipe Institute (CISPS):

301-72	Hubless Cast-Iron Sanitary System.

1.7 Manufacturers Standardization Society of the Valve and Fittings Industry (MSS):

SP-58-75	Pipe Hangers and Supports - Materials, Design and Manufacture.
SP-69-76	Pipe Hangers and Supports - Selection and Application.

1.8 National Fire Protection Association (NFPA):

24-73	Outside Protection. Change "24-73" to "24-77".

1.9 Plumbing and Drainage Institute (PDI):

WH-201-74	Water Hammer Arresters.

1.10 Southern Building Code Congress:

1975 & Am 76 & Am 77 — Standard Plumbing Code.

1.11 American Society of Sanitary Engineers (ASSE):

1010-67 — Water Hammer Arresters.

2. GENERAL REQUIREMENTS: Section entitled "General Requirements, Mechanical", with the following additions and modifications, applies. The work includes providing new plumbing systems and related work. Installation and workmanship shall be in accordance with the Standard Plumbing Code except as specified or indicated otherwise; the permissive provisions shall be considered to be mandatory as though the word "shall" had been substituted for the word "may" wherever it appears, and reference to the "plumbing official" and the "design engineer" shall be interpreted to mean the Contracting Officer. Capacity of equipment shall be not less than that indicated. Plumbing systems shall be connected to building service piping. Plumbing systems shall include all piping buried and above ground except sanitary, roof drainage and water piping more than five feet outside of the building walls are specified in the sections entitled "Exterior Sanitary Gravity Sewers", "Storm Drainage Systems", and "Water Distribution". Contractor shall rough-in for and shall make final plumbing connections to equipment furnished under other sections of this specification.

3. SUBMITTALS REQUIRED: Shop drawings, manufacturer's data and certificates for equipment, materials, finish, and pertinent details for each system shall be submitted and approved before procurement, fabrication or delivery of such items to the job site. Partial submission will not be acceptable. Descriptive data shall be annotated to show the specific model, type and size of each item the Contractor proposes to furnish. The submittal requirements of Section entitled "General Requirements, Mechanical" applies to the following list. Items which are followed by (CO) shall be approved by the Contracting Officer.

3.1 Manufacturer's Data:

a. Plumbing Fixtures (CO)
b. Hot Water Heaters (CO)
c. Pumps (CO)
d. Backflow Preventer (CO)
e. Water Booster System (CO)
f. Deionizer (CO)
g. Air Compressor (CO)

3.2 Certificates: Submit certificates from the manufacturer attesting that each of the following items conform to all requirements of this specification and of reference publications.

a. Pipe and fittings
b. Plumbing Fixtures (CO)
c. Hot Water Heaters (CO)
e. Backflow Preventer (CO)
f. Water Booster System (CO)
g. Deionizer (CO)

d. Pumps (CO)

h. Air Compressor (CO)

4. PIPE AND FITTINGS:

4.1 Sanitary DWV (Drain, Waste and Vent) Alcohol Waste and Storm Drainage Piping: Fittings shall be long radius fittings, except those in vent piping may be short radius fittings. Minimum size piping shall be 2 inches for buried piping and 1.5 inches for above ground piping.

4.1.1 Buried Piping: Cast Iron Hub and Spigot Pipe and Fittings: ASTM A74, Service SV, with caulked and lead joints or rubber gasket joints (ASTM) C564 4.1.1 Buried Piping: Omit the period at the end of the last line and add ", or hubless cast iron piping, CISPI 301."

4.1.2 Above Ground Piping: Shall be one or more of the following materials.

4.1.2.1 Cast Iron Piping: Cast iron hubless pipe, fittings, and couplings; CISPI 301.

4.1.2.2 Steel Pipe: ASTM A53 or A120, standard weight, zinc coated, threaded pipe with zinc coated, threaded fittings (ANSI B16.12). (1-1/2" only for sanitary piping.)

4.1.3 Grooved End Piping: May be used in lieu of steel piping for storm drainage systems. Grooved end piping is specified in paragrph entitled "Domestic Water Piping".

4.2 Acid Waste and Vent Piping: Fittings shall be long radius, except those in vent piping may be short radius fittings. Minimum size piping shall be 2 inches for buried piping and 1.5 inches for above ground piping.

4.2.1 Buried Piping: Piping buried in ground or piping embedded in concrete shall be ferro-silicon alloy containing approximately 14 percent silicon. Pipe and fittings shall be hub and spigot or hubless. Joints for hubless shall be made with mechanical joints consisting of an inner sleeve of tetra-fluoroethylene, and outer sleeve of neoprene and a stainless steel band and bolts.

4.2.2 Aboveground Piping: Pipe and fittings shall be borosilicate glass conforming to MIL-P-22561. Joints shall be made with a bead to bead or bead to plain end and coupling having a compression liner of buna-N rubber, seal ring of tetra-fluoroethylene, stainless steel band and bolt or shell of fiberglass reinforced nylon.

4.3 Cleanouts:

4.3.1 General: Cleanouts shall be installed at base of vertical stacks, changes in direction, in horizontal runs and where indicated. Cleanouts shall be full line size up through 4-inch size; maximum cleanout size shall be 4-inch unless otherwise indicated.

4.3.1.1 Cleanouts in horizontal piping above grade shall consist of plugged "Y" fittings.

4.3.1.2 Cleanouts in buried horizontal piping and horizontal piping above grade where indicated shall be floor type consisting of "Y" fittings and eighth bends.

4.3.1.3 Cleanouts shall be provided at the base of all vertical stacks with the cleanout plug located approximately 18 inches above the floor. For concealed stacks, cleanout plugs shall be extended to wall access covers.

4.3.2 Floor Cleanouts: Cast-Iron with double drainage flange with polished bronze rim and scoriated floor plate with C.O. cast in plate and secured to internal raised head by countersunk screw.

4.3.3 Wall Cleanouts: Cast-iron with brass screw plug with polished stainless steel or chromium plated bronze cover plate attached to plug by countersunk screw.

4.3.4 Cleanouts in Crawl Spaces or Exterior of Building: ASTM A74 or CISPI 301. Cleanout plugs shall be heavy brass or bronze with recessed removal plug.

4.3.5 Acid Resistant Pipe and Fittings: Cleanouts shall be of same material as piping system.

4.4 Domestic Water Piping:

4.4.1 Buried Piping: Sizes less than 4 inches shall be copper tubing. Sizes 4 inches and larger shall be mechanical joint cast-iron piping with cement mortar lining.

4.4.1.1 Copper Tubing: ASTM B88 hard drawn, type K, with solder joint fittings (ANSI B16.18 or B16.22) or flared joint fittings (ANSI B16.26).

4.4.1.2 Cast Iron Pipe: WW-P-421, Thickness Class 23 for gray cast iron, Thickness Class 52 for cast ductile iron, with mechanical joint fittings (ANSI A21.10 and A21.11), cement mortar lined pipe and fittings.

4.4.2 Above Ground Piping: Sizes less than 4 inches shall be copper tubing. Sizes 4 inches and larger shall be galvanized steel.

4.4.2.1 Copper Tubing: ASTM B88 hard drawn, Type K or L, with solder joint fittings (ANSI B16.18 or B16.22).

4.4.2.2 Galvanized Steel Pipe: ASTM A53 or A120, standard weight, zinc coated, threaded pipe with zinc coated, threaded fittings (ANSI B16.3).

4.4.2.3 Grooved End Pipe: ASTM A53 or A120, standard weight, zinc coated, grooved end steel pipe with zinc coated, grooved end fittings and coupling clamps (ASTM A47, Grade 32510, or ASTM A536, Grade 65-45-12), coupling nuts and bolts (ASTM A183), and gaskets (ASTM D2000, Grade No. 3 BA615 A14 B13). Fittings, couplings and gaskets shall be by the same manufacturer. May be used in lieu of zinc coated threaded piping.

4.5 Domestic Water Valves: Provide with stems horizontal or above.

4.5.1 Sizes 2 Inches and Smaller: Threaded end connections, except solder end connections may be used for connections to copper tubing.

4.5.1.1 Gate Valves: WW-V-54, Class A.

4.5.1.2 Globe and Angle Valves: WW-V-51, Class A.

4.5.1.3 Check Valves: WW-V-51, Class A, Type IV.

4.5.1.4 Butterfly Valves: WW-V-1967, Type B, Style 1 or 2. May be used in lieu of gate valves, globe valves and stop valves.

4.5.2 Sizes 2.5 Inches and Larger: Flanged end connections. Cast iron components shall conform to ASTM A126, Grade B or C.

4.5.2.1 Gate Valves: WW-V-58, Class 1.

4.5.2.2 Globe and Angle Valves: WW-V-18826, Class 125.

4.5.2.3 Check Valves: MIL-V-18436, Class 125, non-slam swing type.

4.5.3 Water Pressure Regulating Valves: MIL-V-18146, Type I.

4.5.4 Water Pressure and Temperature Relief Valve: MIL-V-13612, Type I, with test lever.

4.5.5 Hose Bibbs: Bronze body with hand wheel. Inlet shall have internal threads. Outlet shall have 0.75 inch external hose threads.

4.6 Service Water Piping:

4.6.1 Service Water Piping shall be galvanized steel pipe, ASTM A53 or A120, standard weight, zinc coated, threaded pipe with zinc coated, threaded fittings, ANSI B16.3. Grooved end pipe may be used in lieu of threaded as described in "Domestic Water Piping".

4.7 Service Water Valves:

4.7.1 Service water valves shall be the same as the "Domestic Water Valves".

4.8 Deionized Water Piping:

4.8.1 Deionized water piping shall be type 304 stainless steel tubing conforming to ASTM A269, .049 wall, cold drawn, annealed, pickled and passivated with stainless steel compression fittings.

4.9 Deionized Water Valves:

4.9.1 Ball valves shall be 150 lb. WOG, 304 stainless steel construction, TFE seats and seals, screwed connections, conforming to Federal Specification WW-V-35.

4.10 Instrument Air Piping:

4.10.1 Instrument air piping shall be black steel, standard weight pipe with screwed ends conforming to ASTM A53 or A120. Fittings shall be black malleable iron, 150 pound steam, conforming to ANSI B16.3. Branch piping to door operators shall be Type K copper tubing with compression fittings.

4.11 Instrument Air Valves:

4.11.1 Instrument air valves shall be the same as the "Domestic Water Valves".

4.12 Miscellaneous Piping Materials:

4.12.1 Pipe Nipples: WW-N-351, except material shall be brass or bronze for copper tubing.

4.12.2 Unions: ANSI B16.18 or B16.22 for copper tubing, and WW-V-531, Class 1, Style B, for steel piping.

4.12.3 Flanges: ANSI B16.1, Class 125, or ANSI B16.5 Class 150.

4.12.4 Escutcheon Plates: One piece of split hinge type, pressed steel, chromium plated.

4.12.5 Dielectric Connections: Provide at all connections between ferrous and nonferrous piping materials.

4.12.6 Pipe Hangers and Supports: MSS SP-58 and SP-69, Type 1 or 6, except as specified or indicated otherwise. Insulated piping shall have insulation protection shield Type 40. Support rods shall be steel. Finish of materials shall be zinc or cadmium plated, except for uninsulated copper tubing the finish shall be copper plated. Piping insulation is specified in section entitled "Insulation of Mechanical Systems".

4.12.7 Water Hammer Arresters: PDI WH-201, or ANSI A112.26.1, or ASSE 1010.

4.12.8 Strainers: MIL-S-16293, Class 125, Style Y, and shall have blow off outlet with pipe nipple and gate valve.

4.12.9 Gages: GG-G-76, Class 1, Style X, Type I, with 4.5 inch dial, brass or aluminum case, bronze tube. Scale range shall be suitable for the intended service.

4.12.10 Thermometers: GG-T-321, Type II, Class 3. Scale range shall be suitable for the intended service.

4.12.11 Water Meters: MIL-M-18294, Style A, register in gallons.

4.12.12 Water Temperature Regulating Valves: MIL-V-18433.

4.12.13 Vacuum Breaker: ASSE standard 1001 bronze body and internal trim, full size orifice, disc float suitable for 212°F, plain brass finish.

4.13 Treated Water for Dental Lab shall be the same as the "Domestic Water Piping".

4.14 Treated Water for the Boiler Room shall be the same as the "Service Water Piping".

5. FIXTURES: All fixtures and accessories herein specified shall conform to WW-P-541 except as otherwise specified herein. Item "P" numbers correspond with those indicated on drawings.

5.1 All stainless steel sinks shall be undercoated with sound attenuating material.

5.2 All exposed piping shall be chrome plated brass piping. On all fixture connections where nipples are required between copper pipe and fixture connection, nipples shall be full iron pipe size with suitable adapters.

5.3 Flow control devices conforming to WW-P-541/5A shall be provided in the hot and cold water supplies to all lavatories, sinks, and showers. Flow devices shall be adjusted for a flow rate of .75 GPM for lavatories, 2 GPM for sinks and 3 GPM for showers.

5.4 Except as otherwise specified herein provide for all sinks provided under other sections of the specifications: 1/2" loose key stops, supply pipes, 1-1/2" cast brass "P" trap, waste pipe between tailpieces and trap, waste to wall, flow control devices and escutcheons. All of the above shall be chrome plated.

5.5 All wall hung fixtures shall be provided with commercial type chair carriers to support these fixtures free and independent of wall. Carriers shall be adjustable and provided with fixture support bolts, integral fittings as required to accommodate piping arrangement indicated. Carriers shall be installed concealed within walls or pipe chases provided. Carriers shall be

5. FIXTURES: At the end of the lead paragraph add the following: "Provide stop valves in each supply to each fixture. The finish of pipe, fittings and accessories exposed to view shall be chromium plated. Plastic or zinc alloy handles will not be permitted for faucets and valves."

provided with block base or short foot, block or foot shall be anchored to structural floor system.

5.6 Fixture Schedule:

P-1 WATER CLOSET

Water closet conforming to WW-P-541/9A. Vitreous china, elongated, wall mounted, siphon jet vortex action, slotted rim or lugs for bedpan, 1-1/2" top spud.

Chrome plated flush valve designed for quiet operation with large diaphram, vacuum braker, inlet opposite handle, 1" screwdriver angle stop, wall flange with special length tail-piece, less outlet and spud nut to accommodate diverter valve.

Diverter type bedpan cleanser model with adjustable flow nozzle, threaded inlet, wall support, offset outlet flush pipe, spud nut and flange.

White solid plastic seat, open front, less cover with support arms and self-sustaining hinge for elongated bowl.

P-2 WATER CLOSET

Water closet conforming to WW-P-541/1A. Vitreous china, elongated, wall mounted, siphon jet vortex action, 1-1/2" top spud.

Chrome plated flush valve designed for quiet operation with large diaphram vacuum breaker, inlet opposite handle 24" above closet, 1" screwdriver angle stop, wall flange, 1-1/2" spud nut and flange. Straight flush connection.

White solid plastic seat, open front, less cover with support arms and self-sustaining hinge for elongated bowl.

P-3 WATER CLOSET

Same as P-2 without support arms.

P-4 URINAL

Urinal conforming to WW-P-541/2A vitreous china, wall hung siphon jet urinal with 3/4" top spud, intregal trap, extended shield, cast iron wall hanger attached to chair carrier, and 2" back outlet.

Chrome plated, exposed flush valve designed for quiet operation with large diaphram, vacuum breaker, inlet opposite handle, 3/4" screwdriver stop, flush connection and coupling for 3/4" top spud wall and spud flanges.

P-5 LAVATORY

Lavatory conforming to WW-P-541/4A and supply fitting conforming to WW-P-541-9A, 22 x 19 vitreous china, counter top, self rimming.

Fitting ledge, twin front overflows, template & mounting kit.

Chrome plated copper alloy single lever faucet, aerator, pop-up drain fitting & adustable P-Trap.

P-6 LAVATORY

Lavatory conforming to WW-P-541/4A 20" x 18" vitreous china, anti-splash rim, hole for soap dispenser, front overflow, faucet holes on 8" centers, and concealed arm supports attached to chair carrier.

Combination supply and drain fitting with 4" wrist blade handles, S.P.S. gooseneck spout, aerator, outlet not less than 5" above slab, height to top of gooseneck above slab of fixture shall not exceed 9", drain with perforated metal grid.

P-7 LAVATORY

Lavatory conforming to WW-P-541/4A 20" x 18" vitreous china, anti-splash rim, hole for soap dispenser, front overflow, faucet holes on 8" centers, and concealed arm supports attached to chair carrier.

Spread combination faucets on 8" centers, 4" spout, aerator, pop-up drain.

P-8 SURGEONS LAVATORY & fittings conforming to WW-P-541/9A,

28" x 20" vitreous china, concealed arms for attaching to chair carrier, front overflow, faucet holes for 4" centers.

Centerset faucet with gooseneck spout 5-3/8" above slab, 4" wrist blade handles, aerator and cast grid drain.

P-8A SURGEONS LAVATORY & fittings conforming to WW-P-541/9A,

28" x 20", vitreous china, concealed arms for attaching to chair carrier, front overflow, center faucet hole.

Gooseneck spout 6-3/8" above slab, aerator and cast grid drain.

Knee operated control valve, exposed monting, with combination inlet strainer check tops, tempered water outlet, pivot plate type on-off control & rigid type wall support bracket.

P-9 SPECIMEN TOILET

SPECIMEN TOILET CONFORMING TO WW-P-541-/9A floor outlet, vitreous china, siphon jet action, elongated bowl, 1-1/2" top spud.

Chorme plated flush valve with large diaphram, vacuum breaker, inlet 60" above floor, inlet opposite handle 1" screwdriver angle stop, wall flange, 1-1/2" spud nut and flange, straight flush connection.

Bedpan cleanser, self-closing, wall mounted, single pedal valve for cold water only with integral stop, S.P.S. supply to wall with screwdriver stop. Vacuum breaker elevated 7'-6" high. Three foot rubber hose with non-drip nozzle spray, escutcheon and wall hook.

White, solid plastic seat, open front, less cover, with self-sustaining hinge for elongated bowl.

P-10 CLINIC SERVICE SINK

Flushing rim sink conforming to WW-P-541/9A. Vitreous china, siphon jet action, wall mounted, integral trap, 4" wall outlet, 12" stainless steel rim guards on front and sides.

Supply fitting with integral screwdriver stops, 6" elbow control handles, spout with bucket hook and fork brace, inlets threaded inside 1-2" S.P.S.

Chrome plated flush valve with large diaphram vacuum breaker, inlet 24" above sink, handle on front, 1" screwdriver angle stop, wall flange, 1-1/2" spud nut and flange, straight flush connection.

P-11 SERVICE SINK

Service sink conforming to WW-P-541-5A. Vitreous china service sink, size 24"x22" with 12" high back, stainless steel rim guards on front and sides, perforated grid strainer.

Mixing faucet with vacuum breaker, 4-arm handles w/"C & "H" index as, 3/4" hose thread on spout, adjustable wall brace, pail hook on spout, 1/2" female adjustable union couplings with integral stops. All polished chromium plated.

P-12 PLASTER SINK W/PLASTER TRAP

All purpose sink conforming to WW-P-541/9A. Vitreous china sink with Right-hand drain shelf, concealed arms for attaching to chair carrier, perforated grid strainer.

Gooseneck faucet, 6" handles, aerator, 2" O.D. drain connection to plaster trap.

Coated cast iron plaster trap with 2" side outlet located in upper portion and 2" side inlet located in lower portion for a minimum seal of 6", gasketed cover removable, galvanized steel basket and copper screens, 2" chrome plated waste to wall and escutcheon.

P-13 INFANT'S BATH

Vitreous china wall hung infant's bath, approximate overall dimensions 38" long x 28" wide x 7" deep with nominal 8" high back, shelf on left hand side sloped to tub, supplies wall mounted above bath, front overflow and support arms attached to concealed chair carrier.

Spray nozzle with five foot rubber hose, vacuum breaker elevated 7'-6" above floor, concealed piping between vacuum breaker, hose and control valve, wall hook, control valve in supply line to hose, supply spout, control valve in supply to spout and escutcheon. Supply to spout and hose shall be concealed with control valve stem through wall.

Pressure equalizing mixing valve conforming to WW-P-541/7B for concealed piping with integral strainer-check valves, screwdriver stops and with a temperature range of 65°F to 110°F, polished chrome plated handle and escutcheon plate.

P-14 COUNTER SINK, SINGLE BOWL

Stainless steel single compartment sink, self rim type for mounting in custom built counter top. Sink shall have an approximate bowl dimension of 19" x 15-1/2" x 12" deep and an overall dimension of 21-1/4" x 20-1/4", drain centered in bowl. Sink shall be constructed of 18 gauge, type 302 stainless steel with No. 4 finish, all welded and/or seamless drawn with a minimum 5/8" radius corners. All welds shall be ground flush and polished to match adjacent surfaces.

Drain shall be provided with removable crumb cup strainer, stopper and 1-1/2" tailpiece, chrome plated 1-1/2" cast brass 'P' trap, waste to wall and escutcheon to wall.

Supply fitting conforming to WW-P-541/9A, with 4" wrist blade handles, gooseneck spout, aerator, outlet not less than 5" above slab.

P-14A COUNTER SINK, SINGLE BOWL - WITH DISPOSAL

Stainless steel single compartment sink shall be similar to P-14 except with a heavy duty disposal.

Disposal unit with 1-1/4 HP, 480 volts, 60 Hertz, 3 phase, heavy duty type, having a totally enclosed motor with built in overload protection. Exterior top shall be stainless steel and fitted with a rubber coupling/adapter mounting. Grinding and cutting area shall be lined with stainless steel. Grinding ring shall be internally toothed, high carbon steel with a hard, heat-treated surface. Turn table shall be stainless steel, balanced dynamically and fitted with forged stainless steel, anti-jamming impellers that eliminate the need for motor reversing. Impellers shall incorporate tungsten carbide tips and surgical steel shearing blades. Particle discharge ports shall not increase in size through usage. Connection for injecting water directly into the disposer. Disposal unit with a stainless steel stand pipe, vacuum breaker, line strainer, solenoid valve shall be furnished loose for hook-up in the field. Disposer switch and solenoid valve shall be suitable for 120 volt operation. Wiring will be provided under Section entitled "Interior Electrical Systems".

Two (2) inch chrome plated cast brass "P" trap, waste to wall and escutcheon.

Provide stops with handles in water supplies to unit and escutcheons. All chrome plated.

P-15 SHOWER 2'-8" X 4'-0"

Shower floor shall be one piece pre-cast terrazzo made of marble chips cast in gray portland cement to product a compressive strength of 3,000 p.s.i. Terrazzo surface ground and plished, air holes and pits grouted and excess removed. Curbs shall be of size and shape indicated. Drain body shall be cast integral, provided with caulked lead connection and complete with removable chrome plated brass strainer plate.

Showervalve conforming to WW-P-541/7B pressure equalizing mixing valve for concealed piping with integral strainer-check valves, screw driver stops and with a temperature range of 65 degrees F. to 110 degrees F., polished chrome plated handle and escutcheon plate.

Chrome plated bent shower arm with escutcheon, 1/2" male threaded ends.

Ball joint adjustable shower head with tamper proof volume regulator.

P-16 SHOWER - 3'-0" x 3'-0"

Shower floor, valve and accessories - same as P-15

P-17 SHOWER - 2'-6" x 3'-0"

Shower floor, valve and accessories - same as P-15.

P-18 SURGEONS SCRUB SINK

Surgeons scrub sink conforming to WW-P-541/9A, Vitreous china, size 28 x 22. Rim sloped from front to back deck.

Gooseneck spout, 2" spray removable for sterilization, with chrome plated tempered supply from knee valve to spout.

Knee action mixing valve, chrome plated supply pipes, screwdriver stops, and escutcheons, painted iron wall support attached to chair carrier.

Chrome plated waste with perforated strainer, with cast brass 'P" trap, and waste to wall and escutcheon.

P-19 MOP BASIN 3' X 3'

Basin shall be one piece pre-cast terrazzo made of marble chips cast in gray portland cement to produce a compressive strength of 3,000 P.S.I. Terrazzo surface ground and polished, air holes and pits grouted and excess removed. Curbs shall be of size and shape indicated. Drain body shall be cast integral, provided with caulked lead connection and complete with removable chrome plated brass strainer plate. Provide anodized aluminum threshold with vinyl insert.

Valve construction shall conform to WW-P-541/5A. Mixing faucet with vacuum breaker, lever handles, 3/4" hose end rigid spout, adjustable wall brace, pail hook on spout, 1/2" flanged female adjustable arms with integral stops, all polished chrome plated.

P-20 MOP BASIN 32" X 32"

Floor, valve and accessories same as p-19.

P-21 MOP BASIN 2' X 2':

Floor, valve and accessories same as P-19.

P-22 ELECTRIC WATER COOLER:

Electric self-contained water cooler conforming to 00-D-00566, wall hung designed for wheel chair use, with electric refrigeration equipment located in cabinet above fountain deck. Minimum cooling capacity of 6 GPH, from 80 degrees F. inlet water to 50 degrees F. drinking water temperature in 90 degree F. ambient temperature.

Hermetrically sealed refrigeration system using freon 12, 1/8 HP compressor motor, 120 volt, 1 phase, 60 hertz. Finned tube condenser, air cooled by fan. Cabinet and basin shall be stainless steel. Cabinets to be mounted flush against the wall, and all plumbing and electrical connections to be concealed inside cabinet. Self-closing bubbler valves shall be actuated by push buttons. Wall hanger attached to chair carrier.

Three-eighth inch chrome plated supply pipe with wheel handle angle stop and escutcheon.

One and one-fourth inch inlet, 1-1/4" x 1-1/2" female threaded outlet, cast brass chrome plated "P" trap with waste to wall and escutcheon.

P-23 COUNTER SINK-DOUBLE BOWL

Stainless steel double bowl sink, self rim type for mounting in custom built counter top. Each compartment shall have an approximate bowl dimension of 14" x 15-1/2" x 7-1/2" deep and an overall dimension of 20" long x 33" wide, drain centered in bowls, a 4" minimum back deck ledge for mounting faucets. Sink shall be constructed of 18 guage, type 302 stainless steel with No. 4 finish, all welded and/or seamless drawn with a minimum 5/8" radius corners. All welds shall be ground flush and polished to match adjacent surfaces.

Drains shall be provided with removable crumb cup strainers, stoppers and 1-1/2" tailpiece, chrome plated 1-1/2" cast brass "P" trap, waste to wall and escutcheon to wall.

Supply fitting conforming to WW-P-541/9A, with 4" wrist blade handles, gooseneck spout, aerator, outlet not less than 5" above slab.

P-24 BATHTUB

Bathtub conforming to WW-P-541/9A, enameled cast iron, slip resistant, 66" long x 30" wide, pier type with outlet end built into wall, over-rim diverter spout, lever operated 2" pop-up drain with overflow and cast iron "P" trap.

Spray nozzle with five foot rubber hose, vacuum breaker elevated 7'-6" above floor, concealed piping between vacuum breakers, hose and diverter spout, wall hook and escutcheons.

Pressure equalizing mixing valve conforming to WW-P-541/7B for concealed piping with integral strainer-check valves, screwdriver stops and with a temperature range of 65°F to 110°F, polished chrome plated handle and escutcheon plate.

P-24A BATHTUB W/BASE

Same as P-24 except tub to be mounted on enameled cast iron base.

P-25 PERINAL SITZ BATH

Perinal bath conforming to WW-P-541/9A, vitreous china sitz bath, with vitreous china pedestal for floor support, removable vinyl overflow drain with 1-1/2 chrome plated cast brass "P" trap and waste to wall, bell supply fitting, and escutcheon plates.

Pressure equalizing mixing valve conforming to WW-P-541/7B for concealed piping with integral strainer-check valves, screwdriver stops and with a temperature range of 65°F to 110°F, polished chrome plated handle and escutcheon plate.

3-1/2" or 4" diameter dial thermometer with wall flange for flush wall mounting. Thermometer shall sense temperature in discharge from pressure mixing valve.

P-26 BATH TUB

Bath tub conforming to WW-P-541/3A enameled cast iron, slip resistant, 55" long x 23-1/2" wide, recessed, over-rim diverter spout, lever operated pop-up drain with overflow and cast iron "P" trap.

Pressure equalizing mixing valve conforming to WW-P-541/7B for concealed piping with integral strainer-check valves, screwdriver stops and with a temperature range of 65°F to 110°F, polished chrome plated handle and escutcheon plate.

Chrome plated bent shower arm with escutcheon, 1/2" male threaded ends.

Ball joint adjustable shower head with tamperproof volume regulator.

P-27 LAVATORY STATION

Compact Stainless Steel Lavatory Station including 14" x 16" sink bowl, mirror, fluorescent light fixture, storage cabinet, towel dispenser, cup dispenser, soap dispenser, convenience outlet, and stainless steel shelf. Backsplash extends full width and depth of unit. Wiring devices U.L. listed, hospital grade. Fluorescent fixture ballast low leakage type with a maximum leakage of 30 "UA" for utilization with an isolated power system.

Combination Supply and Drain Fitting conforming to WW-P-541/9A, with 4" wrist handles, SPS gooseneck spout, aerator, outlet not less than 5" above slab.

Drain shall be provided with 1-1/2" tailpiece, chrome plated 1-1/2" cast brass "P" trap, waste to wall, and escutcheon to wall.

P-28 LAB SINK

Stainless steel single compartment sink, self-rim type for mounting in custom built counter top. Sink shall have an approximate bowl dimension of 12" x 9-1/4" x 6" deep and an overall dimension of 15" long x 15" wide, drain centered in bowl, a 4" minimum back deck ledge for mounting faucets. Sink shall be constructed of 18 gauge, type 302 stainless steel with No. 4 finish, all welded and/or seamless drawn. All welds shall be ground flush and polished to match adjacent surfaces.

Drain shall be provided with removable crumb cup strainer, stopper and 1-1/2" tailpiece, chrome plated 1-1/2" cast brass "P" trap, waste to wall and escutcheon to wall.

Supply fitting conforming to WW-P-541/9A, with 4" wrist blade handles, gooseneck spout, aerator, outlet not less than 5" above slab.

P-29 WHEEL CHAIR SHOWER

Shower conforming to WW-P-541/7B. Nylon hand spray, adjustable shower, 50" chrome plated slide bar with adjustable holder for hand spray, 60" flexible chrome plated lined hose, inline vacuum breaker, inline tamperproof volume regulator, 1/2" connection with escutcheon.

Pressure equalizing mixing valve conforming to WW-P-541/7B, for concealed piping with integral strainer-check valves, screwdriver stops and with a temperature range of 65° F. to 110° F., polished chrome plated handle and escutcheon plate.

P-30 MOP BASIN 2'-0" x 3'0"

Floor, valve and accessories same as P-19.

P-31 WATER CLOSET - S.S. MAXIMUM SECURITY

Water closet, stainless steel elongated bowl, integral seat wall mounted, siphon jet vortex action, concealed 1-1/2" top spud, security mounting.

Stainless steel wall mounted push button to operate concealed flush valve with large diaphram vacuum breaker.

P-32 LAVATORY - S.S. MAXIMUM SECURITY

Lavatory, stainless steel, front overflow, security mounting. Oval shaped, 13-1/4" x 10" x 5" deep with self closing tamperproof valves with indexed H & C pushbuttons, reversible union supply connection, integral stop and flow control and sanitary combination drinking bubbler/filler.

P-33 STAINLESS STEEL SCULLERY SINK

Stainless steel two compartment scullery sink with drain board at each end, legs and back. Each compartment shall have an approximate inside dimension of 18" long x 24 " wide x 13-1/2" deep, drain boards shall be approximately 19", 8" high splash back, overall dimension approximately 72" long x 30" deep. Sink shall be constructed of 16 gauge, type 304 stainless steel with No. 4 finish, sides and front edges shall be raised and slope down to drain board and sink compartments, drain board shall be channel reinforced and slope down to sink compartments, a minimum 2" deep space shall be provided behind splash back to allow for piping, each sink compartment shall be sloped to 1-1/2" diameter drain, unit shall be supported on 4 stainless steel pipe legs with a minimum diameter of 1-1/2" and with adjustable foot supports. Sink shall be all welded and/or seamless drawn construction with a minimum 5/8" radius corners in sink compartments and dividers between compartments. All welds shall be ground flush and polished to match adjacent surfaces.

Drains shall be provided with removable crumb sup strainer, stopper and 1-1/2" tailpiece. Continuous waste with 2" chrome plated cast brass "P" trap, waste to wall and escutcheon.

One (1) mixing faucet conforming to WW-P-541/5A with lever handles, vacuum breaker, swing spout with aerator, flanged female adjustable supply arms with integral stops in supply arms, all polished chrome plated.

P-34 EMERGENCY SHOWER AND EYE WASH FOUNTAIN

Emergency shower conforming to WW-P-541/7B. Horizontal supply, instant action, stay open valve, nylon pull rope 60" long, chrome plated upper rope guide and lower tie bar, satin chrome cast-brass shower head. Do not provide volume regulator.

Eye wash fountain conforming to WW-P-541/7B. Hand operated, stay-open valve, vitreous china or stainless bowl, two aerated spray

outlets, wall brackets, 1-1/2" waste outlet, tailpiece, 1-1/2" cast brass chrome plated "P" trap with 17 gauge tubing waste to wall and escutcheon.

P-35 WASHING MACHINE CONNECTION BOX

Furnish and install domestic type washing machine connection box consisting of two 3/4" angle valves with female threaded inlet and male threaded outlet, and one 1-1/2" drain connection. Box to be recessed in wall where indicated on drawings.

P-36 WALL HYDRANT

Cast bronze, non-freeze wall hydrant with 3/4" outlet, Integral backflow preventer, pressure relief valve, and vacuum breaker.

P-37 BARIUM TRAP

Cast aluminum solids interceptor with porcelain finish inside, bottom access, fixture trap type with 1-1/2" threadec onnections, gasketed sediment bucket with baffles, removable screen support and bronze screens.

6. ROOF AND FLOOR DRAINS:

6.1 Roof Drains:

6.1.1 Roof drains shall be heavy pattern cast iron type with integral flanges and shall be complete with bee hive or dome shaped cast iron strainer, deck clamp, insulation extension sleeve, calked bottom outlet and a waterproofing clamp device. Strainers shall have a minimum free area equal to twice the drain outlet area. Gravel stops shall be cast iron bolted to drain.

6.1.2 Expansion Joints: At locations where the vertical section of downspout piping between roof drain and connection to horizontal piping is greater than 20-inches, the roof drain(s) shall be furnished with integral expansion joints. At all other locations, furnish an expansion joints. At all other locations, furnish an expansion joint in the vertical sections of downspout piping just below the horizontal offset from roof drain(s). Expansion joints shall be cast iron with brass for copper expansion sleeve having a smooth bearing surface working freely against a graphite saturated, round, braided, asbestos packing ring held in place and under pressure of a bolted gland ring, forming a water- and air-tight flexible joint.

6.2 Floor Drains:

6.2.1 General: Floor drains shall be in accordance with ANSI A112.21.1. except where otherwise specified below and the minimum free area of all strainers shall be in accordance with Table 5.2.

6.2.2 Where floor drains are shown connected to acid resistant pipe, the floor drain bodies and traps shall also be acid resistant, floor drain bodies shall be constructed of high silicon bronze or cast iron, traps shall be constructed of same material as acid resistant pipe in lieu of cast iron bodies and trap specified. Section of pipe between floor drain and trap shall be acid resistant.

6.2.3 Where floor drains are indicated as FD/FT (floor drain with funnel strainer top), furnish a funnel 6-inches high x 6-inches diameter at top, attached funnel to strainer. Funnel shall be constructed from same material and with same finish as specified for floor drain strainer.

6.2.4 Type "A" floor drain (located in mechanical equipment area) shall be cast iron, two piece body with double drainage flange, non-puncturing flashing collar, weepholes, bottom outlet, inside caulk connection, round top, heavy duty, loose set, anti-tilting grate with perimeter drainage slots. Trap shall be cast iron deep seal "P" trap.

6.2.5 Type "B" floor drains (located in all areas except mechanical equipment rooms) shall be cast iron, two piece body with double drainage flange and weepholes, non-puncturing flashing collar, bottom outlet, inside caulk connection and adjustable satin nickel bronze round strainer. Trap shall be cast iron deep seal "P" trap.

6.2.6 Type "C" floor drains (where indicated on drawings) shall be same as type "B" with 1/2" IPS primer tapping. A trap primer with vacuum breaker shall be installed in the cold water supply as shown, and connected to the drain.

6.2.7 Type "D" floor drains (where indicated on drawings) shall be cast iron floor sink, 12" x 12" x 8" deep with cast iron half floor grate, dome strainer or outlet, floor flange and inside caulked outlet. Cast iron deep seal "P" trap with top inlet for inside caulked outlet, spigot outlet, and adjustable caulked cleanout.

6.2.8 Type "E" can wash drains (where shown on the drawings) shall be cast iron with double drainage flange and weepholes, bottom outlet, inside caulk, round top, removable sediment bucket so designed that grate cannot be installed without bucket in position, and bronze adjustable spray nozzle assembly.

7. AIR COMPRESSORS, RECEIVERS AND OUTLETS FOR INSTRUMENT AIR SYSTEM (100 PSIG):

7.1 Duplex air compressor unit shall be complete with tank, (2) two-stage compressors, belt drive and guards, controls, motor starters, safety valves, gauge, automatic drain valve, aircooled after cooler, air intake filters and silencers, valved outlet, and supporting feet. Capacities and

characteristics shall be as indicated. Compressors shall be tank mounted, and completely piped and wired, conform to MIL-C-13874, Type I, Class 1.

7.2 Each compressor shall be pressure lubricated with automatic low oil level protection. Each compressor shall be controlled by a pressure switch for start-stop operation and shall have an oil pressure operated starting unloader. The pressure switches shall be adjustable through a minimum range of 50 to 150 PSIG with a minimum differential between switch make and break of 8 PSI. Each aftercooler shall be factory assembled, mounted, and piped on the compressor tank.

7.3 Air receiver shall be of size indicated, designed for 125 PSIG working pressure, constructed in accordance with the ASME code for Unfired Pressure Vessels and shall bear the ASME stamp. Each receiver shall be hot dipped galvanized inside and outside and shall be provided complete with code relief valve, automatic drain valve, openings indicated and inspection handhole.

7.4 The NEMA-12 duplex electrical control cabinet shall contain fusible disconnect switches, 120 volt control transformer, control pressure switches, magnetic motor starters, manual selector switch for selection of lead-lag motor, overload relays and reset switches for all three phases, hand-off-automatic selector switches, and safety disconnect in the door. The controls shall stop and start the air compressors based on air pressure. Both compressor shall be capable of starting if demand requires. A manual selector switch shall determine the lead compressor.

7.5 Air Dryer: The air dryer shall be a packaged refrigerated type, of a capcity as indicated, producing an air supply dew point of -10° F. at atmospheric pressure. The unit shall be provided complete with heat exchanger integral refrigerant compressor, automatic controls, automatic moisture trap, integral piping and wiring, refrigerant charge, and cabinet suitable for wall mounting. Refrigeration unit shall operate continuously with self-regulating temperature controls. Provide a coalescing oil filter on dryer discharge.

7.6 Air hose and outlets: Provide 25 feet of air hose with fittings at each 100 pound outlet station shown as indicated. Air hose shall be 1/4 inch I.D., 15/32 inch O.D. rated at 200 pounds working pressure. Fittings shall be quick disconnect type and shall consist of a female and male brass socket. Provide each outlet with shut-off valve. Outlets to terminate 48 inches above floor. Supply one flow controlled (30 PSI) air blow gun in each equipment room, and each penthouse for connection to the hose.

7.7 The air compressor for public works building shall be as described in 7.1 through 7.4 above, except only one compressor shall be furnished. The unit shall be 7-1/2 HP, 460/3/60, 39 cfm free air at 100 psig, with 80 gallon horizontal receiver.

8. DEIONIZERS:

8.1 Deinonizers indicated Type 1 shall be ultrapure mixed bed cartridge type deionizer having a capacity of 1230 grains as N_aCL (1050 as C_aCO_3). Two-thirds capacity of cartridge shall be million Ohm water with a pH of 6.8 to 7.2 largely free of silica and CO_2. Pressure drop across cartridge shall not exceed one PSIG at 10 GPH flow. Unit shall consist of a head having inlet and outlet water connection, a purity monitor mounted in head, canister body with clamp and gasket, removable mixed bed cartridge and wall mounting bracket. Unit shall be suitable for 100 PSIG working pressure. Provide a shut-off valve, and union on water inlet and faucet on outlet.

8.1.1 Purity monitor shall have a direct reading meter with scale calibrated from 0 to 15 PPM (ionized impurities) with equivalent reading in ohms resistance from 25,000 to infinity. Unit shall be supplied with cord and plug for 120 volts, 60 Hertz.

8.2 Deionizers indicated Type 2 shall be ultrapure mixed bed deionizer 9" diameter exchange tank having a total capacity of 12,500 grains based on 1 megohm end point. Deionizer shall contain 0.4 cubic foot of anion resin having a capacity 18,000 grains, 0.9 cubic foot of cation resin having a capacity of 12,5000 grains, total of 1.3 cubic foot. Unit shall be designed for flow rate of 5 GPM maximum. Deionizer tank shall have inlet and outlet water connections, and shall be suitable for a minimum of 100 PSIG working pressure. Provide shut-off valves and unions on water inlet and outlet. Piping and accessories on effluent side shall be as specified for deionized water. 8.2 Deionizers indicated Type 2.....In the fifth line change "12,5000" to "12,500".

8.2.1 Provide one purity meter and electronic water sterilizer in the common effluent line from each group of deionizers.

8.2.2 Purity meter same as specified for Type 1 deionizer except shall have accessories as required for mounting in deionized water piping.

8.3 ELECTRONIC WATER STERILIZER: Electronic water sterilizer shall have a capacity of 20 gpm when utilizing deionizing water. The ultra-violet lamps are not to be immersed in water, but passed through fused quartz sleeves. The water shall be forced to spin over the quartz sleeves housing the high intensity ultra-violet lamps. The high intensity ultra-violet lamp shall have a rated life of 7,500 hours. Sterilizer chambers and all wetted parts are to be constructed of Type 304 stainless steel. Cabinet shall be 20 gauge steel with baked enamel finish. On-Off switch and indicating light shall be installed in panel front. Installed sterilizer in horizontal position. Wiring will be provided under section entitled "Interior Electrical Systems".

8.4 DEIONIZED WATER STORAGE SYSTEM:

8.4.1 Deionized water storage tank shall be vertical deisgn, 304 stainless steel, 100 gallon capacity, complete with angle legs, level control, drain valve, vent filter distribution pump with by-pass to tank, and a

sterilizer as described hereinbefore, except suitable for tank installation. The pump shall be centrifugal type, 316 stainless steel with viton gaskets and mechanical seals. Motor shall be 460/3/60. A low level cut-off shall be provided to protect the pump.

NOTE: An in-line sterilizer is not required with the deionizer-storage tank system.

8.4.2 Deionized water faucet with wall flange, 1/2" female inlet, angle body, serrated nozzle, four arm handle with white index button indicating III, interior of valve to be silver plated and exterior to have polished silver plate with clear epoxy coating. Valve not to be self closing type. Install where indicated on drawings.

9. REDUCED PRESSURE BACKFLOW PREVENTORS:

9.1 Backflow preventors shall be of the reduced pressure principle type conforming to the applicable requirements of AWWA standard C506. A Certificate of Full Approval or a current Certificate of Approval shall be furnished for each design, size and make of backflow preventor provided. The certificate shall be from the Foundation for Cross-Connections Control Research, University of Southern California, and shall attest that design, size and make of backflow preventor has satisfactorily passed the complete sequence of performance testing and evaluation. A Certificate of Provisional Approval will not be acceptable.

10. DOMESTIC WATER BOOSTER PRESSURE SYSTEM:

10.1 Provide a three-pump factory fabricated water pressure booster system capable of automatically providing constant system pressure and flow rate indicated.

10.2 Pumps shall be constant speed short coupled vertical multistage diffuser type and shall have stainless steel shafts, water lubricated bronze radial bearings, mixed flow enclosed bronze impellers statically and dynamically balanced and flanged bowl assembly with glass lined diffusers. Pump barrels and discharge heads shall have a corrosion inhibiting lining. Each pump shall have a sleeve mounted single mechanical shaft seal factory guaranteed for one year. The seal shall be replaceable without motor or pump disassembly or disturbing the piping connections. Pump discharge head shall be fabricated of steel with continuous by-pass for low seal pressure. Pump capacities and TDH shall be as indicated.

10.3 Motors shall be vertical hollow shaft type suitable for 460 volt, 3 phase, 60 cycle service, and shall be rated at 40° C ambient. These pump motors shall conform to motor requirements in section entitled "GENERAL REQUIREMENTS, MECHANICAL" and shall operate within the available service factor at any point on the pump capacity-head curve.

10.4 System pressure shall be maintained by five year factory guaranteed pilot operated diaphragm type combination pressure regulating and non-slam check valve on each pump discharge line. Maximum permissible response time to reach and stabilize under an instantaneous pump load change of 50% shall be one second for regulating valves 2-1/2" and smaller and two seconds for 3" and 4" valves.

10.5 Provide a single enclosure shadow box type power and control panel, base mounted. Enclosure shall be steel and exterior shall be bonderized, double prime coated, and furnished with an oven-baked enamel. Panel shall be four bay NEMA 12 construction with all openings fully gasketed and each compartment physically isolated. Three compartments will be for pumps, each compartment shall include starter, fused disconnect switch with external operating handle, contactor, three leg overload protection, running light and multiple position motor control switch. The fourth compartment shall house all necessary control components and include 115 volt transformer of adequate size, with control power switch, indicating lights, relays, audio-visual alarm system and other necessary controls. Alarm shall signal low suction, low system and system over-pressure conditions. Provide additional dry contacts for remote indication of these alarms. Each condition shall have its respective light, plainly marked. Alarm silence button shall be included. The enclosure shall require only one power connection. All of the above shall be factory internally prewired and tested in accordance with the provisions of the National Electric Code.

10.6 System shall include individual 4-1/2" pressure gauges for pumps and for indicating system and suction pressures, all flush mounted in a matching shadow box gauge panel directly above the power and control panel plus all necessary pressure and flow switches to properly control pump sequencing. Also included are pressure switches for abnormally low suction and low and high system pressure to protect pumps and activate audio-visual alarm system. Low suction pressure switch shall be auto-reset and shall shut off all pumps. Low system and system over-pressure switches shall be manual reset. Controls shall be supplied to manually alternate pumps #2 and #3. Each pump casing, or barrel, shall be fitted with a separate prewired temperature probe and approved electric purge valve installed immediately upstream of each PRV with manifolded drain piping. Common purge valve on discharge header not acceptable.

10.7 Pump Sequencing shall be controlled by flow sensing device located in the pump discharge header and shall sequence the pumps as follows: Pump #1 shall run continuously. As flow demand approaches the capacity limitations of pump #1 the flow switch shall bring in pump #2. If flow requirements continue to increase beyond capacities of the pump #1 and pump #2 the flow switch shall bring in pump #3. As capcity requirements decrease the pumps shall cycle off in reverse sequence. Time delay relays shall be provided to prevent short cycling of pumps. Also, the cut-off point of each pump shall be at a flow rate less than the cut-on point.

10.7.1 System shall include a by-pass between the suction and discharge headers. The by-pass is to include a silent type check valve and two shut-off valves plus a pressure switch to shut down the system when the suction pressure reaches the system discharge pressure and to bring the system back on the line when the suction pressure drops to a point 2 PSIG below desired system pressure. A time delay relay shall be incorporated into the control system to prevent short cycling.

10.8 The entire booster system shall be factory fabricated on a common structural steel stand with al interconnecting piping and wiring completed and operationally tested prior to shipment. Complete package shall also include isolation valves on the suction and discharge of each pump, galvanized steel suction and discharge pipe manifolds, as well as copper tubing with shutoff cocks for gauges and pressure switches. The only field connections required shall be system suction and discharge, one power connection at the control panel and connections for remote alarm indication.

10.9 The factory shall certify in writing the water pressure booster system and its component parts have undergone a complete electric and hydraulic test prior to shipment. Test shall include a system operating flow test from 0 to 100% design flow rate under indicated suction and net delivery pressure conditions. Certification shall include copies of test data as recorded by X-Y plotter. Pump tests shall be in accordance with Hydraulic Institute Standards.

10.10 The internal multistage pumping assembly and pressure regulating valves shall be guaranteed five years from date of shipment against defective material and workmanship. The system as a whole shall be guaranteed in writing by the manufacturer for a period of one year from date of shipment against defects in design, materials or construction. All components shall be furnished by a single manufacturer of established reputation and the system shall be a standard catalog product of the manufacturer.

10.11 The service of a factory trained representative shall be made available at site to inspect installtion, start up and instruct operating personnel.

10.12 Power wiring, and wiring to remote alarm including remote alarm indication will be provided under section entitled "Interior Electrical Systems", and "Energy Monitoring and Control System".

11. DOMESTIC WATER HEATERS:

11.1 Steam Fired Heaters: Storage tanks shall conform to MIL-T-12295, Type II or IV, Class 1, Style B. Heaters shall be suitable for use with the storage tanks. The units shall be of a size as indicated, complete with all control valves, relief valves, circulation pumps, and other accessories required for a cmpletely packaged system.

12. PUMPS: Manufacturer's certified pump test curves showing the characteristics of each pump over the entire operating range shall be submitted for approval together with complete catalog data necessary to determine compliance with the specification. Submittals shall indicate actual diameter of impeller being furnished.

12.1 Water Pumps: MIL-P-17552, Type I, Style 2, mechanical seals and drip-proof electric motors. Lifting attachment shall be provided on pumps larger than 2 horsepower.

12.2 Sump Pumps: Submersible type, factory assembled and tested for operation under water. Pump shall be complete with float switch, cast-iron casing, bronze impeller, sealed heavy duty ball bearings, stainless steel shaft, water-cooled, hermetically sealed motor, built-in automatic reset thermal protection, and waterproof three conductor cables and grounding plugs.

13. DENTAL CLINIC WATER SOFTENER:

13.1 The water softener shall be of the type, size and arangement indicated. Raw water analysis shall be as shown in Article 8.3.1 of section entitled "Steam Boilers and Equipment". When operating under the indicated design conditions the unit shall reduce the effluent hardness to 0-5 mg/liter.

13.2 Zeolite Water Softener: The water softener shall conform to MIL-W-17121 and shall have automatic controls. The softeners shall be equipped for a sodium cycle. Each softener tank shall be provided with an operating valve to permit the regeneration of one tank while the other is in service.

14. ELECTRICAL MOTORS AND CONTROLLERS: Shall be furnished with their respective pieces of equipment; and shall conform to and shall have all electrical connections provided under section entitled "Interior Electrical Systems"; and shall be provided with maximum of 120 volt control holding circuits. The cost of providing additional electrical service and related work shall be included under this section when motors and equipment furnished are larger than sizes indicated.

15. INSTALLATION: Shall be in accordance with the Standard Plumbing Code.

15.1 Cleaning and Protection of Piping: Before being placed in position, pipe and fittings shall be cleaned carefully. Piping shall be maintained in a clean condition. All buried piping in corrosive soil or fill material shall be protected against external corrosion by coating with coal-tar enamel protective coating (AWWA C203).

15.2 Domestic Water Piping: Shall not be placed in the same trench as sanitary or storm drainage piping. Excavation and backfilling of trenches shall be as specified in section entitled "Earthwork".

15.3 Hub and Spigot Piping: Shall be laid with hub ends pointing up grade. Pipe shall be graded carefully and shall be supported firmly and uniformly at its proper elevation and grade. Adjacent lengths of pipe shall be adjusted with reference to each other; blocking or wedging between hub and spigot will not be permitted. Spigots shall be adjusted in hubs so as to give a uniform space all around. Open ends of pipe shall be closed by a watertight plug at the end of each day's work.

15.4 Types of Joints:

15.4.1 Caulked Joints: Hub and spigot joints in cast iron pipe shall be firmly packed with oakum or hemp, and filled with one pouring of molten lead not less than one inch deep and not to extend more than one eight inch below the rim of the hub.

15.4.2 Rubber Gasket Joints: Insert gasket (ASTM C564) in the hub. Lubricate inside of gasket and push spigot end of pipe into the gasket until seated.

15.4.3 Hubless Coupling Assembly: Ends of pipe shall be cut square and as smooth as possible. Pipe and fittings shall be inserted into the sleeve and firmly seated against the center rib or shoulder of the gasket. The band tighening device shall be tightened to 60 inch pounds with a calibrated torque wrench specially designed for the purpose and preset at 60 inch pounds. The bands on the two band shield and the inner bands on the four band shield shall be tightened alternately and firmly to not less than 60 inch pounds. Then the outer bands on the four band shield shall be tightened in like manner.

15.4.4 Mechanical Joints for Cast Iron Piping: Shall be installed in accordance with AWWA C600 and shall be anchored in accordance with NFPA 24. Sixteenth and sharper bends, tees and dead ends of pipe shall be securely blocked in the direction of flow with poured-in-place concrete bearing solidly against the pipe.

15.4.5 Threaded Joints: Shall conform to American National Taper Pipe Threads (ANSI B2.1). Provide pipe joint cement and apply to male threads only.

15.4.6 Soldered Joints: Clean and brighten the outside surface of the ends of the copper tubing which will fit into the fittings, and the inside of the fittings with steel wool or fine emery cloth. Apply a thin coat of non-corrosive flux or soldering paste on the cleaned portions of both tubing and fittings. Insert tubing to the full depth of the fitting, then solder with 50-50 lead-tin solder.

15.4.7 Acid Pipe Joints: Shall be made with a bolted compression type stainless steel coupling device with contoured acid resistant elastomer compression ring and a fluorocarbon polymer inner ring seal as recommended by the pipe manufacturer.

15.4.8 Union Type Connections or Unions: Shall be provided at piping connections to all fixtures and equipment.

15.5 Water Hammer: Install water hammer arresters as close as possible to quick acting valves in water piping.

15.5.1 Water Hammer Arrestors: Size and install in accordance with PDI WH-201, or ANSI A112.26.1, or ASSE 1010.

15.6 Water Systems: Install with piping sloped towards the main shut-off valve or lowest fixture.

15.7 Water Valves: Install in accessible places with hose bibb on the building side of the main shut-off valve. Provide shut-off valve in each water supply to each fixture not provided with stop valves.

15.8 Sanitary and Storm Drainage Systems: Horizontal piping shall be installed at uniform slopes of eighth inch per foot for pipe sizes 3 inches and larger, and quarter inch per foot for pipe sizes less than 3 inches. Changes in direction of piping shall be made by the appropriate use of 45 degree wyes, quarter, sixth, eight, or sixteenth bends, or by a combination of these or equivalent fittings. Provide separate P-trap with cleanout for each fixture and drain which does not have integral trap. Vent stacks shall be extened to not less than 12 inches above the roof and shall be secured in vertical position.

15.9 Fixtures: Install fixtures level and in proper alignment with reference to adjacent walls to afford easy access for cleaning each fixture and the area about it. Floor outlet fixtures shall have connection between fixture outlet and floor flange sealed with rubber or wax ring, and shall be secured to floor flange with bolts. Roll of fixture setting putty shall be applied to bottom rim of fixture in order to form a water tight joint between the fixture and floor. Exposed heads of bolts and nuts shallbe chromium plated hexagons with round tops. Bolts and screws shall be 0.25 inch diameter and of sufficient length with hexagon heads. Through bolts shall have 0.125 inch steel plates, 6 inches wide by not less than 24 inches long, at the back side of the wall with washers and nuts. Fixtures and appurtenances shall be secured as follows:

15.9.1 Solid Concrete and Brickwork: Expansion bolts of a length sufficient to extend not less than 3 inches into concrete or brickwork.

15.9.2 Terra Cotta: Toggle or through bolts.

15.9.3 Wood: Hexagon head wood screws.

15.9.4 Gypsum: Through bolts.

15.10 Access Panels: As required for convenient access to shut-off valves and control devices, shall be furnished under this section of the

specifications and shall be located and sized to provide proper access. They shall be installed by the appropriate trade. Access panels shall be prefabricated steel units consisting of a preformed angle or channel frame with a hinged or snap-on cover with spring catch or turn-latch. The wide-leg or flange of the frame section shall be perforated, or may extend into expanded metal wings to provide a key for plaster. Frames shall be not less than No. 16 US gage steel. Covers shall be not less than No. 14 US gage steel. Panels shall be factory primed with rust inhibitive paint.

15.11 Identification Plates and Tags: Equipment, gages, thermometers, valves and controllers shall be provided with 3 by 5 inch plates or tags numbered and stamped for their usage. Plates and tags shall be of brass or suitable nonferrous material and shall be securely mounted or attached. Plates and tags shall show the following information:

a. Manufacturer, Type and Model Number.

b. Contract Number and Accepted Date.

c. Capacity or Size.

d. System in which Installed.

e. System Which it Controls.

15.12 Disinfection: Water piping shall be disinfected in accordance with AWWA C601. Piping system shall be filled with solution containing minimum of 50 parts per million of available chlorine and allowed to stand for minimum period of 24 hours. Solution shall be flushed from system with clean water until maximum residual chlorine content is not greater than 0.2 parts per million.

16. FIELD TESTING: Before final acceptance of the work, each system shall be tested as in service to demonstrate conformance with the contract requirements. The following tests shall be performed in addition to the tests specified in the Standard Plumbing Code. All defects in the work provided by the Contractor shall be corrected by him at his own expense, and the tests repeated until all work is in accordance with contract requirements. Contractor shall furnish instruments, connecting devices and personnel for the tests.

16.1 Domestic Water Piping: Hot and cold water piping shall be subjected to a hydrostatic pressure test of 100 psig for two hours.

16.2 Sanitary and Storm Drainage Piping: Before the installation of any fixtures, the ends of each system shall be capped and all lines filled with water to the roof and allowed to stand until a thorough inspection has been made. After the plumbing fixtures have been set and their traps filled with water, the entire sanitary system shall be subjected to a final air pressure test of not more than one inch water column, and a smoke or peppermint test.

The air and smoke test must be made with an approved smoke testing machine, which must show a clear passage of smoke and air throughout the entire system, and the entire system must be proven absolutely tight under such test.

---END---

SECTION 15402. VACUUM CLEANING SYSTEMS

1. APPLICABLE PUBLICATIONS: The following publications of the issues listed below, but referred to thereafter by basic designation only, form a part of this specification indicated by the references thereto:

1.1 Federal Specification:

WW-P-491B Pipe Fittings, Cast-iron, Drainage.

1.2 American National Standards Institute (ANSI) Publication:

B15.1-1972 Mechanical Power Transmission Apparatus, Safety Standard for.

1.3 American Society for Testing and Materials (ASTM) Publication:

A120-72A Black and Hop Dipped Zinc-coated (Galvanized) Welded and Seamless Steel Pipe for Ordinary Uses.

1.4 National Electrical Manufacturers Association (NEMA) Publications:

ICS-1970 Standard for Industrial Control

2. General:

2.1 Extent of Work: The work consists of providing a wet vacuum cleaning system, complete and ready for operation.

2.2 General Requirements: General requirements include those specified in Section entitled "General Requirements, Mechancial" and the additional requirements specified herein.

2.3 Supports, hangers, anchors, sleeves and plates shall conform to Section entitled "Supports and Sleeves."

2.4 Couplings motor shafts, gears or other moving parts shall be fully guarded, in accordance with ANSI B15.1 "Safety Code for Mechanical Power-Transmission Apparatus." Guard parts shall be rigid and suitably secured and be readily removable without disassembling the guarded unit.

2.5 The equipment is intended for stationary installation and shall permit as many as three operators to clean simultaneously when using 25' lengths of 1-1/2" diameter hose and cleaning attachments.

3. SUBMITTALS:

3.1 Submittals Required: Shop drawings, manufacturer's data and certificates for equipment, materials, finish and pertinent details for each system shall be submitted and approved before procurement, fabrication or

delivery of such items to the job site. Partial submission will not be acceptable. Descriptive data shall be annotated to show the specific model, type and size of each item the Contractor proposes to furnish. The submittal requirements of section entitled "General Requirements, Mechanical", applies to the following lists. Items in the following lists which are followed by (CO) shall be approved by the Contracting Officer.

3.2 Manufacturer's Data:

Valves (CO)
Inlets (CO)
Vacuum Producer including all controls (CO)
Separator and accessories (CO)
Hose and cleaning tools (CO)

3.3 Certificates: Submit certificates from the manufacturer attesting that each of the following items conform to all requirements of this specification and of reference publications.

Pipe and fittings (CO)
Vacuum Producer (CO)
Separator (CO)

3.4 Manufacturer's Recommendations: Where installation procedures or any part thereof are required to be in accordance with the recommendations of the manufacturer of the material being installed, printed copies of these recommendations shall be furnished to the Contracting Officer prior to installation. Installation of the item will not be allowed to proceed until the recommendations are received. Failure to furnish these recommendations are received. Failure to furnish these recommendations can be cause for rejection of the material.

4. Pipe and Fittings:

4.1 Wet Vacuum Cleaning System: Pipe for wet vacuum cleaning system including vacuum exhaust vent shall be zinc-coated, Schedule 40, screw-joint steel pipe conforming to ASTM A120, with black cast iron, screwed, drainage fittings conforming to WW-P-491. All fittings shall be long pattern, except where conditions prevent the use of long pattern, short pattern fittings may be used.

4.1.1 Flanges at point of connections to equipment shall be 150 pound conforming to ANSI B16.5, Class 150.

4.2 Clean out plugs shall be provided at all changes of direction greater than 45 degrees.

5.2 At those locations.....At the end of this paragraph add the following: "The wet vacuum outlet shall be held in place by anchoring in such a manner that the outlet and piping connected thereto does not move when plugging in or plugging out of pick-up hose."

5. VALVES AND INLETS (OUTLET):

5.1 All valves and inlets shall be the product of the vacuum equipment manufacturer and shall be installed in accordance with the manufacturers recommendations.

5.2 At those locations indicated on the plans, install a flush mounted wall inlet valve suitable for use with 1-1/2" diameter hose and accessories. These valves shall be of forged brass with nickel plated cover plates.

6. VACUUM PRODUCER:

6.1 The vacuum producer shall be plate steel construction, one piece, of the multi-stage centrifugal turbine type. Impeller clearances shall be no less than 1/8" through-out to prevent injurious wear. The vacuum producer shall be built in standard overhung design with the impellers mounted directly on the extended motor shaft.

6.2 An exhaust silencer shall be supplied and mounted directly on the exhaust of the vacuum producer.

6.3 An electrically operated fully-modulating anti-surge control shall be supplied and installed on the intake side of the vacuum producer to prevent machine surge when operating in low load condition. Controls for the anti-surge valve shall be mounted in NEMA 1 enclosure and the valve itself NEMA 4.

6.4 The motor shall be capable of operating continuously, and shall be suitable for operation on 460 volt/3 phase/60 hertz current. The power input to the motor under normal operating condition shall not exceed the motor rating.

6.5 Each turbine unit shall be mounted on insulating pads provided by the turbine manufacturer. Pads shall not require bolting or fastening to the floor.

6.6 Installation of electrical wiring and equipment shall be in accordance with Section entitled "Interior Electrical System".

7. HOSPITAL TYPE WET SEPARATOR:

7.1 The system shall be furnished with 24" diameter centrifugal hospital type wet separator, and shall have provisions for adding liquid disinfectant, and for water flushing to sewer line. The separator shall be constructed of sheet steel, no less than 16 gage, and shall be hot dip galvanized after fabrication.

7.2 The separator shall be equipped with two tangential water inlets with lever operated spring closing valves for flushing to sewer through a four

inch (minimum diameter) lever operated drain valve attached flush with the bottom of the separator.

8. ACCESSORIES:

8.1 The following hose and accessories shall be furnished as part of the system:

3 - 25 feet of Heavy duty plastic wire reinforced 1-1/2" hose with couplings.

3 - 1295 aluminum floor handles with swivel elbow joints

3 - 15" wide squeegee tools for wet floor cleaning

3 - Cast aluminum hose racks

9. FABRICATIONS OF PIPING SYSTEMS:

9.1 Before erection, all pipe and fittings shall be thoroughly cleaned of oil, grease and other foreign material. All pipe shall be maintained in a clean condition and open ends of pipe shall be capped during construction.

9.2 All piping shall be cut accurately to measurements established at the building and shall be worked into place without springing or forcing. Pipe and fittings shall be free from fins and burrs. Unions shall be provided where required for ready disconnection. All changes in pipe sizes shall be made with reducing fittings or reducers.

10. FIELD TESTS AND INSPECTIONS: The Contractor Quality Control Representative shall conduct field inspections and witness all field tests, specified in this section. The Contractor shall perform all field tests and provide all labor, equipment, and incidentals required for testing, except that the Government will provide electric power required for field tests, when available.

10.1 Test: Subject systems (or sections of systems) to 50 psi air pressure test for a minimum of 12 hours. While system is subject to test pressure, each joint in system shall be examined for leaks by means of soapsuds. Repair leaks found and retest system.

10.2 After Test Procedure: Wipe off all soapsuds and seal openings of system tightly to prevent entering of dirt.

10.3 After system (or section of systems) is tested, system shall be maintained under constant pressure to assist in detecting any leaks or damage due to construction.

10.4 Equipment Test: The vacuum producer shall maintain a minimum vacuum of 2.0 inches of mercury at the pickup tool inlet, when connected to 25 feet of 1-1/2" diameter hose, with 3 inlet valves operating.

---END---

SECTION 15403. NONFLAMMABLE MEDICAL GAS SYSTEMS

1. APPLICABLE PUBLICATIONS:

1.4 American Society of Mechanical Engineers (ASME) Publications:

Change "Unfired Pressure Vessels - 1974, and Addenda thru 1978" to
"Unfired Pressure Vessels - 1977, and Addenda thru 1978".

Change "Welding and Brazing Qualifications - 1974, and Addenda thru 1978" to
"Welding and Brazing Qualifications - 1977, and Addenda thru 1978".

	Gases).
WW-V-35B	Valve, Ball.
WW-V-54D & Am 1	Valve, Gate, Bronze (125, 150 and 200 Pound, Screwed, Flanged, Solder End, For Land Use).
WW-V-58B	Valves, Gate, Cast Iron; Threaded and Flanged (For Land Use).
PPP-T-66D & Am 1	Tape, Pressure-sensitive Adhesive, Vinyl Plastic Film.

1.2 Military Specifications (Mil. Spec.):

MIL-R-36557B	Regulator, Pressure, Medical Gas Administration Apparatus.
MIL-U-82026A	Valves, Diaphragm, Stop.

1.3 American National Standards Institute (ANSI) Publications:

A13.1-1975	Identification of Piping Systems.
B15.1-1972	Mechanical Power Transmission Apparatus, Safety Standard for.
B16.18-1972	Cast Bronze Solder-Joint Pressure Fittings.
B16.22-1973	Wrought Copper and Bronze Solder-Joint Pressure Fittings.
Z49.1-1973	Welding and Cutting, Safety in.

1.4 American Society of Mechanical Engineers (ASME) Publications:

Boiler and Pressure Vessel Code.	
Section VIII	Unfired Pressure Vessels - 1974, and Addenda thru 1978.
Section IX	Welding and Brazing Qualifications - 1974, and Addenda thru 1978.

1.5 American Society for Testing and Materials (ASTM) Publications:

A74-74	Cast-Iron Soil Pipe and Fittings.
A167-74	Stinless and Heat-resisting Chromium-nickel Steel Plate, Sheet, and Strip.
A269-75	Seamless and Welded Austenitic Stainless Steel Tubing for General Service.
A403-75	Wrought Austenitic Stainless Steel Piping Fittings.
B32-76	Solder Metal.
B88-75	Seamless Copper Water Tube.

D1785-76	Poly (Vinyl Chloride) (PVC) Plastic Pipe, Schedules 40, 80 and 120.
D2466-76	Socket-Type Poly (Vinyl Chloride) (PVC) Plastic Pipe Fittings, Schedule 40.
D2564-73a	Solvents Cements for Poly (Vinyl Chloride) (PVC) Plastic Pipe and Fittings.
A2855-73	Making Solvent-Cemented Joints with Poly (Vinyl Chloride) (PVC) Pipe and fittings.

1.6 American Welding Society (AWS) Publication:

A5.8-76	Brazing Filler Metal.

1.7 Compressed Gas Association (CGS) Publications:

P-2.1-1967	Standard for Medical Vacuum Systems in Hospitals.
V-5-1959	Non-Interchangeable Low Pressure Connections for Medical Gases, Air and Suction.

1.8 The Copper Development Association (CDA) Publication:

Copper Tube Handbook - 1976.

1.9 Manufacturer's Standardization Society of the Valves and Fittings Industry (MSS) Publications:

SP-58-1975	Pipe Hangers and Supports - Materials and Design.
SP-69-1976	Pipe Hangers and Supports - Selection and Application.

1.10 National Electrical Manufacturer's Association (NEMA) Publications:

ICS-1970	Industrial Controls and Systems, with Revisions Through 1978.
MG1-1972	Motors and Generators, with Revisions Through 1978.

1.11 National Fire Protection (NFPA) Publications:

NFPA 13-1976	Installation of Sprinkler Systems.
NFPA 50-1974	Bulk Oxygen Systems at Consumer Sites.
NFPA 56A-1973	Use of Inhalation Anesthetics (Flammable and Non-flammable).
NFPA 56F-1977	Non-flammable Medical Gas Systems.

1.12 Steel Structures Painting Council (SSPC) Publication:

SSPC SP-6-1973	Commercial Blast Cleaning.

2. GENERAL REQUIREMENTS: Section entitled, "General Requirements, Mechanical," with the following additions and modifications, applies:

2.1 SUBMITTALS REQUIRED: Shop drawings, manufacturer's data and certificates for equipment, materials, finish, and pertinent details for each system shall be submitted and approved before procurement, fabrication or delivery of such items to the job site. Partial submission will not be acceptable. Descriptive data shall be annotated to show the specific model, type and size of each item the Contractor proposes to furnish. The submittal requirements of Section entitled, "General Requirements, Mechanical," applies to the following lists. Items in the following lists (which are followed by (CO) shall be approved by the Contracting Officer.

2.1.1 Manufacturer's Data:

Pipe and fittings
Valves (CO)
Regulators (CO)
Liquid oxygen Storage Tanks and System (CO)
Medical Gas Systems Testing Agency
Outlets (CO)
Manifolds (CO)
Compressors (CO)
Pumps (CO)
Dryers (CO)

2.1.2 Certificates: Submit certificates from the manufacturer attesting that each of the following items conform to all requirements of this specification and of reference publications.

Receivers (CO)
Test Instruments
Bulk Liquid Oxygen System (CO)
Medical Gas Systems Testing Agency (CO)

2.2 Systems: Medical gas systems materials, components, equipment, installation, tests, and insspections shall conform to NFPA 50, NFPA 56A, NFPA 56F, CGA P-2.1, and as specified and indicated.

2.3 Safety:

2.3.1 Brazing and Soldering: Safety in brazing and soldering of pipe shall conform to ANSI Z49.1.

2.3.2 Machinery Guards: Fully guard drive mechanisms or other moving parts in accordance with ANSI B15.1. Provide guards fabricated of steel and expanded metal, rigidly mounted, and readily removed without disassembly.

2.3.3 Main Gas Valves: Provide main gas valves with by-pass and isolation valves to permit main valve maintenance without interruption of gas flow to the patient care areas.

3. MATERIALS AND EQUIPMENT:

3.1 Pipe and Fittings: The manufacturer shall thoroughly wash the inside of each length of copper pipe and each copper fitting with a hot solution of sodium carbonate or trisodium phosphate mixed one pound to 3 gallons of water. Carbon tetrachloride shall not be used. After washing thoroughly, rinse with water, and blow dry with oil-free dry compressed air. Effectively cap the ends of the pipe and fittings.

3.1.1 Copper Tube; Oxygen, Nitrous Oxide, Nitrogen, and Compressed Air Systems: ASTM B88, Type K, hard drawn, aboveground and inside buildings.

3.1.2 Copper Tube; Vacuum and Anesthesia Gas Evacuation Systems: ASTM B88, Type L, hard drawn, above ground and inside buildings.

3.1.3 Copper Tube; Buried or Encased in Concrete: As for above ground but annealed.

3.1.4 Fittings for Copper Tubing: ANSI B26.28, cast bronze, or ANSI B16.22, wrought copper.

3.1.5 PVC Piping, Oral Evacuation Systems Only: ASTM D1785, PVC 1120 or 1220, schedule 40 pipe, and ASTM D2466, PVC 12454-B of C, long radius or tye type fittings; ASTM D2564, PVC solvent-cement used with PVC primer recommended by pipe manufacturer.

3.1.6 PVC Cleanouts: Wye type, same as pipe size up to a maximum of 4 inches.

3.1.7 Cast-Iron Soil Pipe: ASTM A74, Service Weight.

3.2 Valves: The manufacturers shall dissassemble and thoroughly wash valves in a hot solution of sodium carbonate or trisodium phosphate mixed one pound to 3 gallons of water. Carbon tetrachloride shall not be used. After washing, rinse thoroughly with water, seal and pack in special packing suited for the use intended.

3.2.1 Ball Valves Oxygen, Nitrous Oxide, Nitrogen and Other Systems: Fed. Spec. WW-V-35 Brass or bronze body double-seal ball valves with replaceable neoprene or polytetrafluoroethylene (TFE) seat seals. Valves shall be suitable for at least 300 pounds per square inch (psi), cold, non-shock working pressure, designed especially for the service intended. Valves may be mounted in the line between flanges or unions. Valves of same type shall be uniform throughout, the product of one manufacturer, uniform in pattern, size and appearance, labeled for the intended service, and conform to NFPA 56F.

3.2.2 Diaphragm Valves (Oxygen, Nitrous Oxide and Nitrogen): Mil. Spec. MIL-V-82026 brass-bodied, packless, diaphragm type with regrindable or renewable seats and disks capable of being disassembled in line for servicing

o-ring and seating surfaces. Valves shall be suitable for at least 300 psi, cold, non-shock working pressure.

3.2.3 Pressure Reducing Valves (Compressed Air): Mil. Spec. MIL-R-36557 bronze body and trim, single seat, dead end service at 30 to 100 psi range on low pressure side. Composition diaphragm and bronze spring set directly on valve stem. Maximum one pound variation in outlet pressure for each 10 pounds variation in inlet pressure. Provide strainer on inlet side.

3.2.4 Gate Valves; (Vacuum, Compressed Air and Anesthesia Gas Evacuation Systems Only): Fed. Spec. WW-V-54, Class a, Type I orType II, Style 2 or 3, sweat ends. Valves of like kind shall be of one make. Valves shall be all brass or bronze.

3.2.5 PVC Body all Valves (Oral Evacuation Systems Only): PVC body double-seal ball valves with replaceable neoprene or polytetrafluorethylene (TFE) seat seals. Valves shall be suitable for at least 100 psi, cold, non-shock working pressure, designed especially for vacuum service. Operating parts of valve shall be removable without removing valve from line. Valves of same type shall be uniform throughout, shall be product of one manufacturer, and shall be uniform in pattern, overall size, and appearance.

3.3 Specialties:

3.3.1 Hangers and Supports: Shall conform to Section entitled "Supports and Sleeves".

3.3.2 Piping Isolators: Commercial metal clad hair felt type for isolating pipe from hangers.

3.3.3 Pressure Gauges: GG-G-76 except that gauges for oxygen and nitrous oxide systems shall be manufactured and labeled expressly for the intended service, marked "USE NO OIL", and be UL labeled. Provide gauges with white dials and black lettering. Gauges shall be provided downstream of all zone valves and elsewhere as indicated.

3.3.4 Vacuum Bottle Brackets: One piece plate of 22 gauge stainless steel, 16 gauge chrome-plated metal, or 16 gauge aluminum with finish matching adjacent outlet.

3.3.5 Brazing Alloy; AWS A5.8, Type BCup, silver-copper-phosphorus alloy.

3.3.6 Soldering Alloys: ASTM B32, Type 95TA, Tin-Antimony alloy or ASTM B32, Type 50A, tin-lead alloy. Apply solder alloys as specified in Table 2.

3.3.7 Valve Cabinets: 18-gauge stainless or galvanized sheet steel, flush-mounted, commercially available items with welded joints, and rigidly assembled. Boxes shall be of proper size to accommodate valve and fittings.

Punch or drill sides to receive tubing. Provide anchors to secure cabinets to wall construction. Openings in cabinets shall be substantially dust tight.

3.3.7.1 Cover Plates: 18-gauge sheet steel or 22 gauge stainless steel. Provide covers with replaceable plastic windows with a corrosion resistant device or lever, secured to cover, to remove window in an emergency.

3.3.7.2 Cabinet Labels: Each valve or valve cabinet shall be labeled in substance and color coded as follows: "CAUTION (intended service) TO (area served)." Color coding shall be the same as for the adjoining pipe as specified hereinafter.

3.3.8 Buried Warning and Identification Tape: Polyethylene plastic tape manufactured specifically for warning and identification of buried utility lines. Tape shall be of the type provided in rolls, 6 inches minimum width, color coded for intended service with warning and identification imprinted in bold black letters continuously and repeatedly over entire tape length. Warning and identification shall be "CAUTION BURIED (Intended Service) LINE BELOW" or similar wording. Code and letter coloring shall be permanent, unaffected by moisture and other substances contained in trench backfill material.

3.3.9 Piping Identification: Fed. Spec. PPP-T-66, pressure sensitive adhesive tape and decals. Colors and labels shall conform to ANSI A13.1. Adhesives shall be suitable for the surfaces intended to provide a permanent bond.

3.4 Outlets:

3.4.1 Connectors:

3.4.1.1 DISS Connectors: CGA V-5, Diameter-Index Safety System (DISS), brass connections conforming to NFPA 56F with DISS type, label color code, automatic valve and secondary check valve requirements given in Table 1 as follows. Permanently label and color all female connectors and include the warning "USE NO OIL". Labels shall have cast-in or engraved letters. Permanently label and color code all male connectors.

TABLE 1

DISS CONNECTORS

Gas	Color Code	DISS No.	Automatic Valve	Secondary Check
Oxygen	Green	1240	Yes	Yes
Nitrous Oxide	Blue	1040	Yes	Yes
Nitrogen	Gray	(None)	Yes	Yes
Compressed Air	Orange	1160	Yes	Yes
Vaccum	(None)	1220	Yes	No
Anesthesia Gas Evac.	Blue	(None)	Yes	No

3.4.2 Outlet Units: NFPA 56F, and shall consist of DISS non-interchangeable connectors, automatic valves, secondary check valves (except vacuum and evacuation outlets), and capped 1/4-inch tubing stubs for supply connections, color coded and labeled for the intended services. Rigidly secure outlets in outlet boxes. Install valves for easy access and maintenance. Permanently label outlets with engraved faceplates or engraved laminated plastic plates, color coded for the intended service. Include in labels the warning "USE NO OIL". Provide each outlet with a positive acting metal or plastic cap secured by a chain to the faceplate.

3.4.2.1 Wall Outlets: Flush mounted in 18 gauge galvanized steel boxes with 22 gauge stainless steel or 16 gauge chrome-plated brass face plates.

3.4.2.2 Fixed Column Ceiling Outlets: Mounted on fixed columns fabricated of 20 gauge stainless steel with removable access panels and attachment provisions for adjustable auxiliary equipment hooks and slides. Include the following outlets:

ME-08

- 2 Oxygen
- 2 Vacuum
- 1 Medical Air
- 1 Nitrogen (Not required in delivery rooms)
- 1 Nitrous Oxide
- 4 120 Volt Outlets (non-twist lock)
- 1 Anesthesia Waste Evacuation
- 2 Holes with blanks for monitoring equipment, 37 terminal cannon
- 1 Hole with blank for future gas outlet
- 1 Ground lug on top side of ceiling plate
- 4 Grounding Jacks

3.4.2.3 Outlets located in laboratory furniture and fume hoods are specified under Section entitled "Laboratory Equipment and Fume Hoods". Provide service connections as required. 11704

3.4.2.4 Patient-Service Wall Systems are specified under section entitled "Medical Equipment - Miscellaneous". Provide service connections as required. 11702

3.5 Manifolds, Oxygen, Nitrogen, and Nitrous Oxide: NFPA 56F, with non-ferrous manifold, fittings, valves, parts and connections rated at 3000 psi working pressure and designed for intended service.

3.5.1 Cylinder Banks: Duplex manifold arrangement with 4 nitrous oxide cylinder connections per bank and 2 nitrogen cylinder connections per bank.

3.5.2 Bank Switch-Over: Only one cylinder bank shall be used at one time. Switch-over from exhausted to full cylinders shall be automatic and without pressure fluctuation. Resetting of manifold controls shall be automatic or by single lever after the replacement of empty cylinders. Pressure switch shall actuate switch-over controls and alarms. House manifold controls in a sheet steel cabinet. Switch-over alarm and high-low pressure switches shall have auxiliary contacts provided for connections to the EMCS.

3.6 Alarms: All alarms shall have auxiliary contacts for connections to the EMCS.

3.6.1 Reserve Switchover alarm: Shall function when any reserve medical gas supply goes into operation.

3.6.2 Pressure Alarms: Operated by pressure switches.

3.6.2.1 Low Pressure Alarms: Shall function when system pressure drops approximately 10 pounds below a predetermined pressure.

3.6.2.2 High Pressure Alarms: Shall function when system pressure rises approximately 10 pounds above a predetermined pressure.

3.6.2.3 Pressure Switches: General purpose, contact or mercury type. Provide contact type with protective dust covers. Switches shall have 20 to 100 psi adjustable pressure with inside or outside adjustment. Operating pressure differentials shall be 3 psi minimum at operational pressure setting. Switches shall activate when pressure either drops or rises, and be easily accessible.

3.6.3 Bulk Liquid Oxygen Low Level Alarm: Shall function when liquid oxygen in converter tank reaches a predetermined minimum level.

3.6.4 Area Alarm Panels: Combination audible and visual high-low pressure alarm panels consisting of wall box, cover plates, 110/24 volt transformer, pressure or vacuum switches.

3.6.4.1 Wall box shall be for flush mounting and constructed of steel with baked enamel finish or galvanized cast metal. Size of box shallb e as required to accommodate number of alarms required. Wall ties shall be provided to securely anchor box to wall. Provision shall be made for finish wall adjustment.

3.6.4.2 Cover plates shall be constucted of 16 gauge stainless steel with No. 4 satin finish and shall be fastened directly to mounting brackets furnished with wall box. Plate shall be imprinted with alarms identification and operating instructions. Panel shall have one alarm buzzer with silencing switch, switch(s) for testing lights, two lights for each service scheduled (one light to indicate "normal pressure" and one light to indicate "abnormal line pressure") and a pressure gauge for each service. When "abnormal line pressure" light is activated by high-low pressure switch, this light is to remain on until system pressure has been corrected.

3.6.4.3 All alarm devices shall be suitable for 24 volt operation. Provide a 120/24 volt transformer in wall box. Wiring between transformer and alarm devices shall be factory wired. A 120 volt service including connection to transformer will be provided under Section entitled "Interior Electrical Systems".

3.6.4.4 In lieu of providing a single alarm box with scheduled alarms at each location indicated, modular alarm units may be provided. If modular units are provided, a single 120/24 volt tranformer shall be provided and all 24 volt control wiring between transformer and control devices shall be provided under this section. Wiring shall be as specified under Section entitled "Interior Electrical Systems".

3.6.5 Master Alarm Panel: Located in boiler room shall be the same as area alarms, except gauges are not required and the pressure or vacuum switches will be remote mounted in lieu of panel mounted.

3.6.5.1 Master Alarm Panel Schedule: The following points shall be monitored:

System	Alarm Point
Oxygen	1) line pressure high
	2) line pressure low
	3) liquid level low
	4) Emergency reserve in use
	5) Emergency reserve low
Vacuum	1) line vacuum above normal
	2) line vacuum below normal
Nitrogen	1) line pressure high
	2) line pressure low
	3) reserve supply in use

Nitrous Oxide	1) line pressure high 2) line pressure low 3) reserve supply in use
Medical Air	1) line pressure high 2) line pressure low
Dental Air	1) line pressure high 2) line pressure low
Anesthesia Gas Evacuation	1) line vacuum above normal 2) line vacuum below normal

3.7 Air Compressors: Oil-free-type with sizes, number, capacities, and discharge pressures as indicated. Compressors shall be reciprocating, rotary or centrifugal type capable of continuous operation at indicated discharge pressures.

3.7.1 After Coolers: Water cooled after coolers are requied on reciprocating type compressors. Size coolers for cooling the air to within 15 degrees of inlet water temperatures.

3.7.2 Inlet Silencers: Provide a properly sized silencer for each compressor.

3.7.3 Drives: Electric motor drives with either flexible couplings or V-belt drives. Reciprocating compressors shall have V-belt drives. Drive guards shall conform to ANSI B15.1.

3.7.4 Motors and Motor Starters: NEMA MG1 and NEMA ICS. Motors shall have dripproof enclosures. Motor starters shall be magnetic across-the-line type with general purpose enclosures, and have thermal overload protection in each phase.

3.7.5 Receivers: Welded steel and conforming to ASME Boiler and Pressure Vessel Code Section VIII and ASME labeled for 125 psig. Receivers shall have corrosion preventative lining, gauges, switches, drains and factory applied coating of paint.

3.7.6 Air Dryers, Refrigerated: Self contained, hermetically sealed compressors, moisture separator, heat exchanger, automatic controls and automatic drains. Units shall be capable of drying 95 degrees F saturated air at indicated cfm to a minus 10 degrees F dew point (atmospheric dew point). House unit in an enameled steel cabinet. Controls shall automatically shut down units at low or no load conditions.

3.7.7 Air Filters: 5 micron air filters of the indicated cfm capacity and working pressure.

3.7.8 Automatic Controls: Provide automatic controls for alternating the units on start-up and for a one minute delay of second unit start-up when units are on emergency power.

3.7.9 All components shall be mounted on a common steel frame, wired and pipe as a complete packaged unit. The package shall require a single 460/3/60 power source.

3.7.10 Required Data: Furnish the following data:

a. Compressor manufacturer and model: _____

b. Compressor operating speed: _____ rpm

c. Capacity (free air delivered at indicated pressure): _____ _____ cfm

d. Type of bearings in compressor: _____

e. Type of lubrication: _____

f. Capacity of receiver: _____ gal.

g. Type and adjustment of drive: _____

h. Electric motor; manufacturer, frame, type: _____

i. Speed of Motor: _____ rpm

j. Current characteristics and HP of motor: _____

k. Thermal cutout switch; manufacturer, type and model: _____ _____

l. Starter; manufacturer, type and model: _____

m. Air silencers; manufacturer, type and model: _____

n. Air filter; manufacturer, type and model: _____

o. After Cooler; manufacturer, type and model: _____

p. Air Dryer; manufacturer, type and model: _____

3.8 Vacuum Pumps: Sizes,number, capacities, and operating pressure (vacuum) as indicated. Pumps shall be reciprocating, rotary or centrifugal type capable of continuous operation at indicated vacuums.

3.8.1 Outlet Mufflers and Vents: Provide pumps with outlet mufflers sized and designed for the pumps. Pipe pump outlets to the outside.

3.8.2 Drives: Electric motor driven with either flexible couplings or V-belt drives. Reciprocating type shall have V-belt drives. Guards shall conform to ANSI B15.1.

3.8.3 Motors and Motor Starters: NEMA MG1 and NEMA ICS. Motors shall have dripproof enclosures. Motor starters shall be magnetic across-the-line type with general purpose enclosures, and have thermal overload protection in each phase.

3.8.4 Vacuum Receivers: Welded steel and conforming to ASME Boiler and Pressure Vessel Code Section VIII and ASME labeled for 125 psig. Receivers shall have corrosion preventative lining, gauges, switches, drains and factory applied coating of paint.

3.8.5 Automatic Controls: Provide automatic controls for alternating the units on startup and for a one minute delay of the second unit startup when units are on emergency power.

3.8.6 Solenoid Valves: Vacuum pumps of the water seal or water displacement type shall have the water supply cut off by a solenoid valve when the pump is not running.

3.8.7 All components shall be mounted on a common steel frame, wired and piped as a complete packaged unit, requiring a single 460/3/60 power source.

a. Pump Manufacturer and Model: _____

b. Pump Operating Speed: _____

c. Capacity (free air exhausted from 22-inch Hg. vac.): _____ cfm

d. Type of Bearings in Unit: _____

e. Type of Lubrication _____

f. Type of Adjustment of Drive _____

g. Capacity of Tank: _____ gal.

h. Electric Motor: Manufacturer, Frame, and Type: _____

i. Motor Speed: _____ rpm

j. Current Characteristics and HP of Motor: _____

k. Thermal Cut-out Switch Manufacturer, Type and Model: _____

l. Starter: Manufacturer, Type and Model: _____

3.9 Anesthesia Gas Evacuation Pumps: Shall conform to the paragraph 3.8, Vacuum Pumps, except pumps shall be of the water-seal or water-displacement type only for handling combustible gases. Number, sizes, capacities and operating pressures (vacuum) shall be as indicated. Provide a solenoid valve in the pump water supply to shut off the water when the pump is not running.

3.10 Bulk Liquid Oxygen Systems: Liquid oxygen storage tanks, evaporators, piping and controls shall conform to NFPA 50 and NFPA 56F with tank size of 1500 gallons. Submit detailed shop drawings.

3.10.1 Reserve Oxygen Back-Up: Provide a duplex oxygen cylinder system, as specified in paragraph 3.5 Manifolds, Oxygen and Nitrous Oxide, to back-up the bulk liquid oxygen system. Switch over shall be automatic with the "Reserve Switchover Alarm" activated. Provide 16 cylinders per bank.

3.10.2 Liquid Oxygen Storage tank:

3.10.2.1 Inner Container: ASTM A167, Type 304, welded stainless steel tank conforming to ASME Boiler and Pressure Vessel Code Section VIII. Tank shall be ASME labeled for a pressure rating of 250 psi.

3.10.2.2 Outer Shell: Welded carbon steel tank conforming to ASME Boiler and Pressure Vessel Code Section VIII but without ASME stamp.

3.10.2.3 Insulation: Annular space insulation shall have an insulating value together with annular space evacuation sufficient to insure a maximum leak evaporation of 7.5 pounds of oxygen per 24 hours. The insulation shall not spark or burn when touched with a glowing platinum wire in a pure oxygen atmosphere. Apply the insulation so as to insure against settling or displacement in service.

3.10.2.4 Supports: Provide the supports for an installed and loaded forces of 1-1/2 G vertical and 1/2 G horizontal and for shipping, empty, 3 G.

3.10.2.5 Valves and Fittings: The storage tank valves, fittings, and safety devices shall conform to NFPA 50 and ASME Boiler and Pressure Vessel Code Section VIII. The tank shall be provided with, but not limited to, the following:

a. Liquid level gauge.

b. Inner container pressure gauge.

c. Gauge bypass valve, cock.

d. Gauge vent valve, cock.

e. 95 percent tri-cock valve.

f. Gauge valves, cock.

g. Thermocouple valve, cock.

h. Thermocouple gauge tube.

i. Thermocouple.

j. Inner container relief valve.

k. 250 psi setting.

l. Inner container monel bursting disc, 260 psi rating.

m. Bottom fill valve, globe.

n. Vent valve, globe.

o. Inlet bleed valve, globe.

p. Liquid fill connection.

q. Inlet line relief valve, 100 psi setting.

r. Evaporating coil, LUX fin tubing, min. 4000 scfh at 250 psi design pressure.

s. Annular space evacuation valve, globe flanged.

t. Annular space evacuation filter.

u. Pressurizer valve, globe.

v. Liquid withdrawal valve, globe.

w. Liquid to pump valve, globe.

x. Pump vapor return valve, globe.

y. Outer shell o-ring relief valve.

3.10.2.6 Pipe and Fittings: ASTM A269, Type 304, stainless steel pipe and ASTM A403 welding fittings. Weld all pipe joints and fittings on inner container and outer shell. Screw or flange valve, gauge and equipment joints as indicated.

3.10.2.7 Tank Finish: SSPC-SP-6 commercial blast clean the tank and finish with: (1) a corrosion inhibitor primer coat; (2) manufacturer's standard exterior white with green color code finish.

3.11 Vibration Isolators: Provide vibration isolators of the stable spring free standing type consisting of a steel or cast iron top and bottom

housing incorporating one or more tempered steel springs with integral leveling bolts, adjustable resilient shocks for controlling movement in all directions, and at least three thicknesses of ribbed neoprene base pads bonded to the isolator housings. Steel springs shall be at least 2-1/2 inches in outside diameter with an unloaded height of 1 to 1-1/2 times the outside diameter. Shocks of the friction type will not be accepted.

3.12 Isolator Pads: Provide oil resistant base pads selected for 30-50 psi loading. Friction type shocks will not be accepted.

3.13 NITROGEN CONTROL CABINET: The nitrogen control cabinet shall consist of a nitrogen "DISS" connection wall outlet, a bronze bodied double seal full flow ball valve, a self relieving, piston type, high flow precision adjustment regulator and two line pressure monitoring gauges (one for supply pressure and one for outlet pressure), all rigidly mounted in a steel wallbox with a stainless steel front panel and finishing ring, designed for recessed mounting.

3.13.1 Recessed wall box shall be constructed of 18 gauge steel with a prime painted finish. Four wall ties shall be supplied for securely anchoring box within wall construction. Provision shall be made for wall finish adjustment.

3.13.2 Valve shall be bronze body, double seal, full flow ball valve with neoprene seats and O-ring packing, designed for working pressure up to 300 psi, with a chrome plated brass ball which seals in both directions. The valve shall require only a quarter turn of the handle from "open" to "closed" positions.

3.13.3 The cabinet shall be provided with type "K" copper tubing extension for supply connection to the unit.

3.13.4 The front panel shall be constructed of 16 gauge stainless steel with a No. 4 satin finish and shall be fastened directly to mounting brackets furnished with the wall box. Panel shall be imprinted with control identification and operating instructions. Panel shall have opening for pressure gauges, nitrogen outlet, regulator and supply valve knobs.

3.13.5 Nitrogen outlet shall be in accordance with wall outlets specified under article entitled Outlets, located elsewhere in this section.

3.13.6 Supply and outlet line pressure monitoring gauges shall have a range of 3 to 200 psi and shall be individually labeled to indicate supply and outlet pressures.

3.13.7 The pressure regulator shall be piston type, high flow with a full flow relief valve and finger tip adjustment. Regulator control shall have a retaining clip or set screw to prevent regulator control from accidentally being turned completely out.

4. INSTALLATION:

4.1 General: Medical gas systems installation shall conform to NFPA 50, NFPA 56A, and NFPA 56F and CGA P-2.1 as applicable.

4.2 Piping:

4.2.1 Pre-Installation Cleaning: Disassemble positive pressure gas systems pipe, fittings, valves, and all other components, except those supplied especially cleaned and prepared for the intended service, and thoroughly wash in a hot solution of sodium carbonate or trisodium phosphate mixed one pound to 3 gallons of water. After washing, rinse with water and cap until installation.

4.2.2 Piping Installation: Exercise care with cutting, brushing and reaming tools and equipment to prevent oil, grease and dirt from entering pipe and components. Rewash all contaminated pipe and components. Cut pipe square and accurately to measurements and work into place without springing or forcing. Follow the general arrangement indicated. Do not bury, embed or conceal piping except as indicated. Do not install piping near high voltage lines.

4.2.3 Exposed Oxygen Piping: Install in wall-mounted sheet steel raceways and junction boxes.

4.2.4 Threaded Joints: Coat male threads of copper alloy fittings used in shutoff valves with type 95TA soldering alloy before assembly.

4.2.5 Brazing and Soldering: Personnel qualification procedures shall conform to ASME Boiler and Pressure Vessel Code Section IX. Metal preparation and joining procedures shall conform to the CDA Copper Tube Handbook. Continuously purge copper piping with oil free nitrogen during brazing and soldering operations to prevent the oxidation of the inside pipe surfaces. Carefully apply flux suitable for the intended system and completely clean off the excess after brazing and soldering. Apply brazing and soldering alloys in accordance with Table 2.

TABLE 2

BRAZING AND SOLDERING ALLOY APPLICATIONS

SYSTEM	PIPE SIZES	
	2 Inch and Smaller	2-1/2 Inch and Larger
Oxygen	Silver	Silver
Nitrous Oxide	Silver	Silver
Compressed Air	Tin-Antimony	Silver
Nitrogen	Tin-Antimony	Silver
Anesthesia Gas Evac.	Tin-Antimony	Silver
Vacuum	Tin-Lead or Tin-Antimony	Silver

4.2.6 Grounding: Ground metal piping systems in accordance with Division 16, Electrical.

4.2.7 Buried Oxygen Piping: Encase in protective cast-iron pipe.

4.2.8 PVC Solvent-Cemented Joints: Install in accordance with ASTM D2855 and any additional written recommendations of the PVC Pipe manufacturer.

4.2.9 Grading: Unless otherwise indicated, grade piping in the direction of flow. Do not trap except where indicated.

4.2.10 Changes in Size: Effect changes in size with reducing fittings. The use of bushings shall not be permitted.

4.2.11 Supports: Rigidly support all valves and other equipment where installation or operation might strain the pipe.

4.2.12 Pipe Sleeves: Provide pipe sleeves where pipes and tubing pass through masonry walls, floors, roofs, and partitions in accordance with Section entitled "Supports and Sleeves".

4.2.13 Identification of Piping: Identify all piping in accordance with ANSI A13.1, except use tape and decals conforming to Fed. Spec. PPP-T-66 in lieu of stencils and paint. Provide copies of the piping identification code and piping layout schematic framed under glass and isntall where directed.

4.2.14 Excavation and Backfilling: Excavating and backfilling of pipe trenches shall be as specified in Division 2, Site work. Coordinate provision of utility warning and identification tape with backfill operation. Provide above all buried lines at a depth of 8 to 12 inches below finish grade.

4.3 Valves: Disassemble all solder socket end valves before brazing and soldering to prevent damage to seats and seals. Except where indicated or in flush wall mounted cabinets, install valves with the stem vertical and with the valves accessible for operation and maintanance. Install strainers on the inlet side of all pressure reducing valves.

4.4 Hangers and Supports: Design, selection, fabrication and installation of piping hangers and supports shall conform to Section entitled "SUPPORTS AND SLEEVES".

4.5 Manifolds: Installation shall conform to NFPA 56F. Securely anchor manifolds to wall or building structure as indicated. Vent relief valves to the outside of the building.

4.6 Alarms: Install alarm systems as indicated and in accordance with NFPA 50, NFPA 56, and NFPA 56F. Install the electrical wiring and power supply as indicated and as required by Division 16, Electrical.

4.7 Equipment:

4.7.1 Equipment Foundations: Provide equipment foundations of sufficient size, weight and proper design to preclude shifting of equipment under operating conditions, or under any abnormal conditions which could be imposed upon the equipment. Foundations shall meet the requirements of the equipment manufacturer, and when required by the Contracting Officer, the Contractor shall obtain from the equipment manufacturer approval of the foundation design and construction for the equipment involved.

4.7.2 Equipment Installation: Install equipment in accordance with the manufacturer's written instructions and as indicated. Unless specified or indicated otherwise, grout equipment mounted on concrete foundations before piping is installed. Install piping in such a manner as not to place a strain on any of the equipment. Do not bolt flanged joints tight unless they match adequately.

4.7.3 Pressure Gauges: Provide gauges with shut-off valve or petcock installed between the gauge and the line.

4.7.4 Receivers: Provide a valved bypass around receivers.

4.7.5 Vibration Isolation: Vibration isolation efficiency (dynamic deflection) shall conform to Table 4 at the lowest operating speed (rpm) of the equipment and with the static deflection not exceeding one inch.

TABLE 4

VIBRATION ISOLATION EFFICIENCY (DYNAMIC DEFLECTION)

SPRING LOAD	DEFLECTION (inches)			
(1000 lbs.) S5	1.0	1.5	2.0	3.0
	Maximum Outside Spring Diameter (inches)			
0K - 1K	2.5	4.5	5.5	7.0
1K - 2K	4.0	5.5	7.0	8.0
2K - 3K	5.5	7.0	8.0	8.0

4.7.6 Minimum Isolation Efficiency:

a. Ground floors, basements, or equipment base pads: 85 percent.

b. Upper floors or roofs, single vibrating equipment item: 93-95 percent.

c. Upper floors or roofs, multiple vibrating equipment items: 98 percent.

4.7.7 Air Compressor Systems: Air compressors shall not be located near patient care areas that would be adversely affected by compressor noise or vibration. Air compressor systems including receivers, dryers and filters shall not be tied into the compressed air systems until after the completion and approval of the purity tests for both systems. The tie-in point shall be at a flange or union joint.

4.8 Bulk Liquid Oxygen Systems: Installation shall conform to NFPA 50 and be done under the supervision of the manufacturer's erection superintendent.

4.9 Flexible Connectors: Install in the lines with sweat-to-threaded unions. For dissimilar metals, use dielectric unions. Rigidly support pipe not more than 15 diameters from each connector.

4.10 Electrical Work: Provide electric motor driven equipment specified herein complete with motors, motor starters and controls. Electrical equipment and wiring shall be in accordance with Division 16, Electrical. Provide motor starters complete with properly sized thermal overload protection and other appurtenances necessary for the motor control specified. Provide manual or automatic control and protective devices required for the operation of equipment and any control wiring required for controls and devices but not shown on the electrical plan.

5. FIELD TESTS AND INSPECTIONS:

5.1 General: As an exception to provisions set forth elsewhere in this contract, the Contracting Officer will witness all field tests. The Contractor shall give the Contracting Officer 5 days prior notice for dates and times for acceptance tests.

5.2 Test Instruments: The Contractor shall submit calibration histories for all gauges, air flow and vibration measurement instruments used. Vacuum gages shall have one in. Hg increments and be readable to 1/2 in. Hg. Unless specified otherwise, pressure gauges shall have one psi increments and be readable to 1/2 psi.

5.3 Gas Systems Pressure Tests: Pressure and leak test oxygen, nitrous oxide, nitrogen and compressed air (except compressors, dryers, and filters) with nitrogen as specified for purity tests. The Contractor shall use no other material, gas, or liquid in the systems.

5.3.1 Leak Tests, Low Pressure (Less than 600 psi) Systems: Before attaching service outlets, couplers or other equipment, test each section of each system at 150 percent of design pressure with nitrogen. Test each joint with soap solution, repair all leaks found, and retest.

5.3.2 Leak Tests, High Pressure (600 - 3000 psi) Systems: Before attaching service outlets, couplers or other equipment which might be damaged by the high pressures, pressurize each section in 200 psi increments with nitrogen until the design pressure is reached. Leak test all joints with soap solution at each 200 psi increment.

5.3.3 Equipment Pressure Tests: Test joints made in attaching service outlets, couplers or other equipment in each system at 150 percent of design pressure except where this pressure would exceed the maximum working pressure or damage pressure switches or other equipment. Do not connect such equipment until after test is completed. Test joints with soap solution, repair all leaks and retest.

5.3.4 Cleaning: Carefully wipe off soapsuds and seal openings against contamination until tanks or equipment are connected.

5.3.5 Final Pressure Tests, Low Pressure Systems: Pressure test with nitrogen at 150 percent of design pressure for 24 hours. No pressure drop, except due to temperature change, will be accepted. Allow for ambient temperature change in accordance with the relationship $PF + 14.7 = (P1 + 14.7)(T2 + 460) \div (T1 + 460)$, in which T and P represent Fahrenheit temperature and gauge pressure, respectively, numbers 1 and 2 denote initial and final readings, and PF is the calculated final pressure. If PF exceeds the measured final pressure, retest each section individually, and apply soap solution to all joints of each section for which a reduction in pressure occurs after allowing for ambient temperature change. Repair leaking joints and repeat

test until no reduction in pressure occurs. Use a test gauge calibrated in one psi increments and readable to 1/2 psi in performing the tests.

5.3.6 Final Pressure Tests, High Pressure Systems: Pressurize system with nitrogen in 200 psi increments until design pressure is reached. Hold design pressure for 24 hours. No pressure drop, except due to temperature change, will be accepted. Allow for ambient temperature change in accordance with the relationship PF + 14.7 = (P1 + 14.7) (T2 + 460) ÷ (T1 + 460), in which T and P represent Fahrenheit temperature and gauge pressure, respectively, numbers 1 and 2 denote initial and final readings, and PF is the calculated final pressure. If PF exceeds the measured final pressure, retest each section individually, and apply soap solution to all joints of each section for which a reduction in pressure occurs after allowing for ambient temperature change. Repair leaking joints and repeat test until no reduction in pressure occurs. Use a test gauge calibrated in 50 psi increments and readable to 25 psi in performing the tests.

5.4 Gas Systems Purity Tests: Purity tests are required for new gas systems or existing gas systems which are modified, repaired or replaced. Test each oxygen, nitrous oxide, nitrogen, and compressed air system and each outlet for purity and contamination. The following purity and contaminate levels apply to both the nitrogen used for purging and testing and the purity test gas samples:

a. Nitrogen, using gas chromatography: 99.9 percent by volume min.

b. Oxygen, using gas chromatography: 0.05 percent by volume max.

c. Solid particulate, using millipore filter: 2 milligrams per cubic meter max.

d. Hydrocarbon compounds, using gas chromatography: One part per million, concentration volume per volume, max.

e. Water (Moisture), using Pittsburg cup: 0.005 milligrams per liter max.

f. Halogenated hydrocarbon compounds, using mass spectrometry; 2 parts per million, concentration volume per volume, max.

g. Carbon monoxide, using gas chromatography: 2 parts per million, concentration volume per volume, max.

5.4.1 Purging: After completion of pressure tests, purge each system and each outlet with nitrogen until clean and free of contaminates. The Contractor shall use no other material, gas or liquid in the systems. Purge by applying nitrogen at 75 percent of system design pressure but not exceeding 80 psig. Open and close outlet valves repeatedly allowing nitrogen to build-up to full inlet pressure between closings. Close valves slowly to prevent pulsation or damage to the systems.

5.4.2 Purity Tests: A medical gas systems testing agency, retained by the Contractor and approved by the Contracting Officer, shall test and analyize gas samples from each outlet in each system and from the nitrogen source. Clean and purge systems and outlets which fail to meet the specified purity levels until the specified tests verify the purity levels are reached. The testing agency shall submit laboratory reports for all systems, outlets, and nitrogen source.

5.4.3 Air Compressor Systems Purity Tests: After completion of pressure and operational tests, the testing agency shall test air samples from each air compressor system including receivers, dryers and filters. The air samples shall conform to the purity and contaminate levels specified for solid particulates, hydrocarbon compounds, water (moisture), halogenated hydrocarbon compounds, and carbon monoxide. The agency shall submit laboratory reports for all systems.

5.5 Vacuum Systems Tests: vacuum, anesthesia gas evacuation and oral evacuation.

5.5.1 Blowing Out: Before installation of vacuum pumps, alarm switches and outlet valves, blow out lines clear with oil-free nitrogen.

5.5.2 Leak Tests: After installation of outlet valves but before installing vacuum pumps and alarm switches, pressurize each section of each system with oil-free nitrogen to 25 psi and test with soap solution. Repair all leaks and retest.

5.5.3 Cleaning: Carefully wipe off soapsuds and seal openings against contamination until tanks or equipment are connected.

5.5.4 Final Pressure Tests: Pressurize system with oil-free nitrogen to 25 psi for 24 hours. No pressure drop, except due to temperature change, will be accepted. Allow for ambient temperature change in accordance with the relationship $PF + 14.7 = (P1 + 14.7)(T2 + 460) \div (T1 + 460)$, in which T and P represent Fahrenheit temperature an gauge pressure, respectively, numbers 1 and 2 denote initial and final readings, and PF is the calculated final pressure. If PF exceeds the measured final pressure, retest each section individually, and apply a soap solution to all joints of each section in which a reduction in pressure occurs after allowing for ambient temperature change. Repair leaking joints and repeat test until no reduction in pressure occurs. Use a test gauge calibrated in one psi increments and readable to 1/2 psi in performing the tests.

5.5.5 Vacuum Tests: After the installation of alarm switches, evacuate each system to 17 inches Hg. and test each outlet's pressure (vacuum) with a test gauge calibrated in one inch Hg. increments and readable to 1/2 inch Hg.

5.6 Air Compressors and Vacuum Pumps: Operationally test each unit through their respective pressure and capacity ranges. Test control operations from start-up, low through high speeds, shut-down and emergency

functions and safety limits. Check each unit for conformance to the indicated or specified performance requirements. Test the air compessors, receivers, dryers, and filters in the gas systems purity tests.

5.7 Bulk Liquid Oxygen Systems: Check the systems for conformance to NFPA 50, the manufacturer's written performance specifications, and the indicated and specified requirements. Test the systems in the gas systems purity tests.

5.8 Vibration Isolation: Check each item of equipment throughout its respective speed and load range for conformance to vibration isolation requirements. The Contractor shall record and submit the following data for each piece of equipment, in addition to the required data specified hereinbefore: static spring deflections, vibration amplitude at low and high speeds and loads, and isolator efficiencies.

5.9 Alarms: All alarms shall be tested by subjecting lines to high and low pressures and activating switch over alarms at manifolds.

5.10 Outflow Test: After completion of final test, install cylinders and blow lines clean with type of gas designated for each system. The testing agency shall sample every outlet using a gas analyzer to confirm the presence of a minimum 99% concentration of the designated gas. A written log shall be maintained showing each outlet tested and the percent gas concentration at the outlet. The log shall be included as a part of the "Certificate of Compliance".

5.11 Completion: Upon completion of all tests, the Contracting agency shall furnish a "Certificate of Compliance" stating all tests have been satisfactorily completed and no cross connection of systems exist.

"5.12 Access panels shall be provided in this section, as required, for access to concealed shut-off valves and control valves. Provide as specified in the section entitled "Plumbing"."

SECTION 15404. PNEUMATIC TUBE SYSTEM

1. GENERAL REQUIREMENTS: At the end of the lead paragraph add the following: "The pneumatic tube system shall be Powers Model 610 Pneumatic Tube System complete with Single Zone Security System, product of Powers Regulation Co., Transitube Division, Denver, Colorado, and no other product will be accepted.

1. GENERAL REQUIREMENTS: Section entitled "General Requirements, Mechanical," with the following additions and modifications applies. The work includes providing a complete and operable pneumatic tube system, designed, built and installed by the manufacturer.

1.1 Submittals Required: Shop drawings, manufacturer's data and certificates for equipment, materials, finish, and pertinent details for each system shall be submitted and approved before procurement, fabrication, or delivery of such items to the job site. Partial submission will not be acceptable. Descriptive data shall be annotated to show the specific model, type, and size of each item the Contractor proposed to furnish. The submittal requirements of section entitled "General Requirements, Mechanical", applies to the following lists. Items in the following lists (which are followed by (CO) shall be approved by the Contracting Officer.

1.1.1 Manufacturer's Data:

(a) Pipe and fittings
(b) Stations (CO)
(c) Blower-exhauster (CO)
(d) Computer (CO)
(e) Carriers (CO)
(f) Transfer Unit (CO)
(g) Specialties (CO)
(h) Electrical Materials (CO)

2. SCOPE OF WORK: This specification includes the furnishing of all labor, materials, equipment, and supplies required for the complete installation of a 6" O.D. automatic pneumatic tube system. Each station shall have the ability to send to any other station on the system without manual handling.

2.1 The system shall provide a capability of ninety nine (99) stations.

2.2 The system shall be built of modular components to facilitate addition of future active stations.

2.3 Exhausters shall be designed for overhead hanging.

2.4 Stations shall be the type than can store three (3) carriers.

2.5 The manufacturer shall organize work and maintain orderly conditions relating to the installation of the manufacturer's equipment.

3. DESCRIPTION FOR SECURITY SYSTEM:

(a) The operator opens the send door, inserts the carrier, and leaves the send door open.

(b) The operator selects the security transaction code assigned for that day by pressing the proper vertical and horizontal matrix switches. Only those vertical switches that in combinations of two add up to A,C, and E in hexadecimal will be used. All the horizontal buttons will be used.

(c) He then presses the send button which tells the computer that thenext transaction will be a security type.

(d) The computer will acknowledge that it has received the transaction by lighting a "security transaction indicator" mounted above the source station.

NOTE: If at this point the operator wants to cancel the transaction, he opens the send door or pushes one of the matrix switches which extinguishes the "carrier accepted" indicator and cancels the transaction.

(e) The operator next closes the send door and selects the destination station address on the matrix switches and pushes the send button. The "carrier accepted" light illuminates.

NOTE: If at this point the operator wants to cancel the transaction, he opens the send door or pushes one of the matrix switches which extinguishes the "carrier accepted" indicator and cancels the transaction.

(f) When the carrier dispatches, the "security transaction indicator" goes out at the source station.

(g) When the carrier arrives at the destination station the "security transaction indicator" above the station lights and the carrier remains in the vertical position in the receiving chamber.

(h) The operator then selects the security transaction code assigned for that day by pressing the proper vertical and horizontal matrix switches.

(i) He then pushes the send button which delivers the carrier into the receiver tray and extinguishes the "security transaction indicator" above the destination station.

(j) This completes the security transaction.

(k) Each station with the security feature will also be able to send transactions to all other stations in the normal manner.

In the event an alarm occurs prior to the carrier arriving at the destination station, the carrier will be sent back to the source station. If

the route back to the source station is also on alarm, the carrier will stop and wait until the first alarm is cleared and then proceed to either the source or destination station. The transaction will be flagged on the CRT "Maintenance Log" as a security transactioin so the maintenance personnel will know it is a security transaction and can retrieve it from the system using diagnostics at the CRT if it becomes necessary.

4. DESCRIPTION OF SYSTEM:

4.1 General Operation: The system shall consist of 14 stations on 1 zone. It shall be centrally directed. Carriers do not travel through a central exchanger, but take the shortest route to their destination.

4.2 System Description:

4.2.1 The system shall be controlled by a digital computer. The computer shall include memory logic circuits for maintaining system operation during power interruption and all interfacing of printed circuit assemblies to perform the following functions:

(a) Direct carriers to their destination by the shortest, most direct route.

(b) Prevent carriers from being dispatched to non-existing, signed-off, or malfunctioning stations.

(c) Establish traffic priority.

(d) Provide station sign-off by an ON/OFF backlighted, indicator button at each station.

(e) Prevent carriers from being dispatched while there is another carrier in the terminal's receiver.

(f) Dispatch carriers at all stations by means of a backlighted matrix directory and depressible selector buttons.

(g) Automatically route empty carriers to stations with the lowest carrier counts.

(h) Accumulate carrier transaction totals for the entire system, and up to a maximum of 10 individual stations.

(i) Provide manual and automatic sign-off (5 cycles maximum) at the control center.

4.3 Supervisory Features:

4.3.1 CRT with keyboard - displays in English language.

(a) Displays each transaction (station from, station to, and carrier location).

(b) Displays zone's backlog.

(c) Indicates alarms conditions.

(d) Displays the zone status.

4.3.2 Interactive keyboard display (requested information)

(a) Displays a page directory which indicates call letters to each on CRT to request other displays.

(b) Displays current alarms by type.

(c) Displays carrier transaction totals by system, and 10 selected stations. Totals shown since beginning operation and since last request.

(d) Displays total number of alarms and down-time totals by type of equipment.

(e) Displays status of each station.

4.3.3 Cathode ray tube (CRT) for supervisory functions to display the following in abbreviated English language:

(a) Transactions - station from, station to, carrier locations.

(b) Back log.

(c) Alarms - by type.

(d) Total system transactions by system, or 10 selected stations. Total shown since last request or beginning operation.

(e) Down-time by type.

4.3.4 Automatic carrier redistribution - by selecting the "Return Carrier" button, carriers are rerouted to stations requiring them, based on computer transaction history.

4.3.5 Automatic priority in load balancing or by prior designation.

4.4 Sending and Receiving Stations:

4.4.1 The stations shall be upright recessed type with the exception of the station in the pharmacy. The stations shall be designed so that there is a 4 carrier capacity then the station will shut itself off automatically.

4.4.2 Stations shall provide for receive and despatch functions through one transmission tube. The appearance of all upright stations shall be identical whether they receive or dispatch up or down.

4.4.3 The station's operating panel shall consist of a matrix with station names for selection, a send button and a station ON/OFF button. When a station is inoperative, the word "OFF" shall appear. If a selected station is not existing or is unable to receive a carrier, the words "NOT AVAILABLE" shall appear on the operating panel. The words "CARRIER IN RECEIVER" shall appear on the panel when carrriers are received at the station. The words "INCOMING CARRIER" shall appear on the receiving station's panel when a carrier is enroute to that station. When the station is in use, the matrix shall remain lighted; when not in use the matrix shall remain dark. The send button shall illuminate and display the words "STATION SELECTED" when a proper selection has been made.

4.4.4 The pharmacy station shall be a console type performing as described for the recessed stations.

5. LINE MATERIALS: Transmission tubing shall be 6" O.D., 16 ga. electric welded, flash removed, galvanized steel. Bends shall be same material, formed to 48" minimum radius. Expanded bends shall not be used. Joints shall be slip type on straight pipe only. Bolted couplings shall be used on all connections relating to bends and are to be air-tight. Individual clamps or galvanized row clamps with 3/8" diameter cadmium plated threaded rods screwed into appropriate anchors are to be used for hanging all materials.

6. CARRIER:

6.1 Furnish 45 foam lined carriers, side opening type, 15" inside length x 4-1/4" inside diameter with removable foam liners. Carrier shall be constructed of only three pieces, have double fastener, and be capable of transporting drugs packaged up to 1000 ML I.V. bottles, x-rays, and correspondence.

7. BLOWER:

7.1 Pneumatic power for propelling carriers through the transmission line shall be supplied by a packaged blower, designed for overhead installation.

7.2 The 460/3/60 blower shall be contained in an insulated sheet metal enclosure having a noise level not to exceed 50 decibles on the "A" scale.

8. INLINE TRANSFER UNIT:

8.1 The inline transfer unit will direct a carrier to its proper station without the use of impact valves.

8.2 Each inline transfer unit will be mounted from suitable construction above suspended ceilings throughout the building. Location within the building will depend on system layout.

9. OPERATION:

9.1 All components, stations, in-line transfer units, and blower shall be operated by air. The Contractor shall obtain air from the nearest IA header of the required size.

10. INSTALLATION:

10.1 The Contractor shall install the pneumatic tube system in accordance with the station locations shown on the drawings, and system schematic contained herein, coordinating the work with that of all other trades. The Contractor shall furnish and install the complete system including required services, power and control wiring, and air piping from header to unit.

10.2 Electrical Work shall be performed in accordance with the applicable paragraphs of Section 16402 Interior Wiring Systems.

11. TESTS:

11.1 System Operation: Operate system and simulate failures to assure system operates as described hereinbefore. All defects or deficiencies shall be corrected at no additional expense to the Government.

11.2 Carriers: Carriers used in system tests shall be inspected for scratches on leather washers and skirts or rubbing bands. Presence of deep scratches indicate rough spots in tubing and/or joints. Rough spots shall be corrected before acceptance of the system.

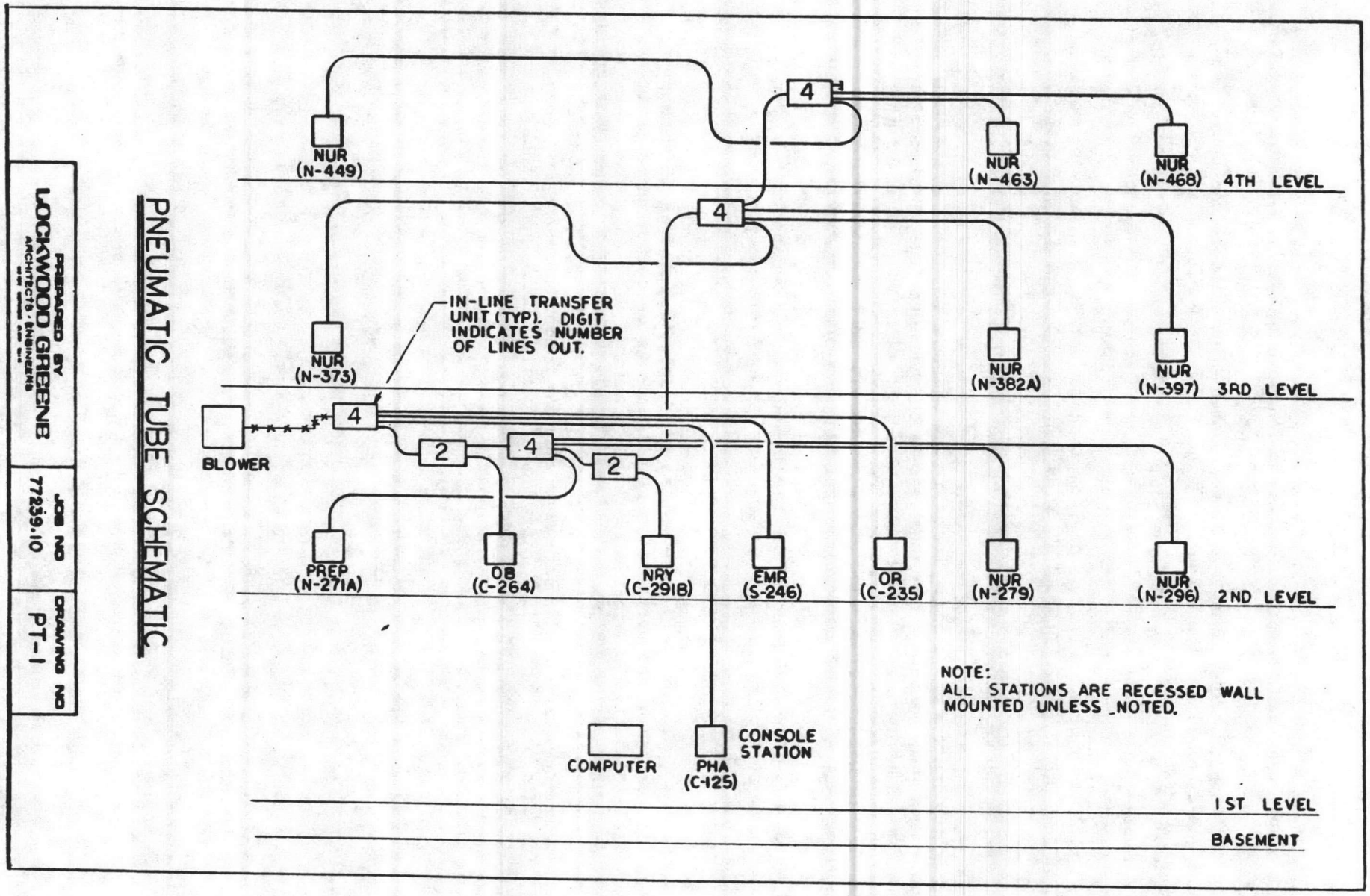
PNEUMATIC TUBE SCHEMATIC
PREPARED BY
LOCKWOOD GREENE
ARCHITECTS · ENGINEERS
JOB NO
77239.10
DRAWING NO
PT-1
NUR (N-449)
NUR (N-463)
NUR (N-468)
4TH LEVEL
NUR (N-373)
IN-LINE TRANSFER UNIT (TYP). DIGIT INDICATES NUMBER OF LINES OUT.
NUR (N-382A)
NUR (N-397)
3RD LEVEL
BLOWER
PREP (N-271A)
OB (C-264)
NRY (C-291B)
EMR (S-246)
OR (C-235)
NUR (N-279)
NUR (N-296)
2ND LEVEL
NOTE:
ALL STATIONS ARE RECESSED WALL MOUNTED UNLESS NOTED.
COMPUTER
CONSOLE STATION
PHA (C-125)
1ST LEVEL
BASEMENT

SECTION 15407 GAS PIPING

1. APPLICABLE PUBLICATIONS: The following publications of the issues listed below, but referred to thereafter by basic designation only, form a part of this specification to the extent indicated by the references thereto:

1.1 Military Specification:

MIL-M-18294B Meters, Fluid Quantity Volumetric.

1.2 American National Standards Institute (ANSI) Publications:

Z21.18-1973 Gas Appliance Pressure Regulators

Z21.24-1973 Metal Connectors for Gas Appliances

Z21.41A-1974 Quick-Disconnect Device for Use with Gas Fuel.

Z21.45A-1973 Flexible Connectors of Other Than All-Metal Construction for Gas Appliances.

1.3 American Petroleum Institute (API) Publication:

6D-1974 Steel, Gate, Plugs and Check Valves for Pipeline Service

1.4 National Fire Protection Association (NFPA) Publication:

54-1978 National Fuel Gas Code

58-1976 Standard for the Storage and Handling of Liquefied Petroleum Gases.

1.6 Underwriter's Laboratories, Inc.:

UL441-73 Gas Vents

2. GENERAL REQUIREMENTS: Section entitled "General Requirements, Mechanical", with the following additional modifications, applies. The contract drawings indicate the extent and general arrangement of the gas piping. The system shall include piping within the building and underground to the propane tanks. Pipe size not definitely indicated shall be in accordance with the best commercial practice. Supply piping to equipment shall be not less than the size of gas inlet on the appliance or equipment to be connected. The Contractor shall investigate the structural and finish conditions concerning his work and shall arrange work accordingly. The Contractor shall furnish fittings, valves, and accessories required to meet the conditions, at no additional cost to the Government.

3. MATERIALS AND EQUIPMENT:

3.1 General: Materials and equipment shall conform to the respective publications, National Fire Protection Codes, and other requirements specified herein. Materials and equipment shall also be the products of manufacturers regularly engaged in the manufacture of such products. Propane gas shall be supplied to all gas-burning equipment.

3.2 Propane Tanks: Provide two 1,000 gallon propane storage tanks. The tanks shall be designed in accordance with NFPA 58. Each tank shall be complete with all shut-off valves and safety devices as required by NFPA 58 and an outlet regulator having a capacity of 1000 SCFH at a regulated pressure of 15 inches water gage. Provide each with a fuel unloading station with shut-off valves, excess flow valves, and accessories as required by NFPA 58.

3.3 Gas Pipe and Fittings: Pipe or tubing for gas service shall be steel pipe with steel fittings, brass pipe with brass fittings or copper tubing type K or L with copper fittings. All gas pipe and tubing shall be as specified in NFPA No. 54. Underground piping shall be coated with thermosetting epoxy in accordance with Federal Specification L-C-530B, Type II.

3.4 Vents: Gas vents shall conform to UL 441.

3.5 Valves: Valves shall be of iron body plug type, shall conform to API 6D, including air seat test. Valves 1-1/2 inches and smaller shall be either lubricated or non-lubricated type suitable for 125 psi working pressure. Valves 2 inches and larger shall be lubricated type and suitable for 175 psi working pressure. Valves larger than 8 inches shall be worm gear operated. Service cocks shall be plug cock type, iron body, brass core with 125 psi rating.

3.6 Pipe Hangers, Supports and Sleeves: All pipe hangers, supports and sleeves shall conform to Section entitled "Supports and Sleeves".

3.7 Pressure Regulators: All pressure regulators shall conform to ANSI Z21.18, shall be of iron or steel body, shall be adjustable for changing the downstream pressure within reasonable limits, and shall be of a type showing pounds per square inch for inlet and inches of water column for outlet. Regulators shall be adjustable with automatic loading, and shall have automatic pressure relief. Regulators shall have a capacity as shown on the drawings.

3.8 Flexible Connectors: Flexible connectors shall conform to ANSI Z21.45.

3.9 Quick Disconnect Couplings: Quick disconnect couplings shall conform to ANSI Z21.41A

9.1 Sprinkler Systems in Unfinished Areas: Unfinished areas are defined as attic spaces, spaces above suspended ceilings, crawl spaces, pipe chases, and spaces where walls or ceilings are not painted or not constructed of a prefinished material. Primed surfaces shall receive one coat of red enamel conforming to TT-E-489 applied to a total dry film thickness of one mil.

9.2 Sprinkler Systems in All Other Areas: Primed surfaces shall receive two coats of paint to match adjacent surfaces, except valves and operating accessories shall receive one coat of red enamel conforming to TT-E-489 applied to a total dry film thickness of one mil. Piping shall be provided with 2 inch wide red bands spaced at maximum of 20 feet intervals throughout the piping systems. Red bands shall be red enamel or self adhering red plastic tape.

10. ELECTRICAL WORK: Electrical work is specified in the Section entitled "Interior Wiring Systems", except for control and fire alarm wiring. Fire alarm system is specified in Section entitled "Manual and Automatic Fire Alarm System".

11. FIELD TESTING AND FLUSHING: Field tests to determine conformance with the specified requirements shall be performed in the presence of the Contractor's Quality Control Representative. Each system shall be hydrostatically tested at 200 psig for a period of 2 hours, and underground piping shall be flushed in accordance with NFPA 13. Alarms and other devices shall be tested, the water flow alarms being tested by flowing water through the inspector's test connection. When hydrostatic and alarm tests have been completed and all necessary corrections made, the Contractor shall submit to the Contracting Officer a signed and dated certificate, similar to that specified in NFPA 13, with a request for a formal inspection by the Contracting Officer. The Atlantic Division, Naval Facilities Engineering Command, Fire protection Engineer shall be notified by the Resident Officer in Charge of Construction and shall witness all tests and approve all systems before they are accepted. The request for formal inspection shall be submitted at least five working days prior to the date the inspection is to take place. A competent representative of the sprinkler installer shall be present during the inspection. At this inspection, any or all of the required tests shall be repeated as directed by the Contracting officer. All defects shall be corrected by the Contractor at his own expense and additional tests made until it has been demonstrated that the systems comply with all contract requirements. All appliances and equipment for testing shall be furnished by the Contractor and all expenses, in connecton with the tests, shall be defrayed by him. Water for testing will be furnished by the Government.

---END---

6.6 Sleeves: Steel pipe sleeves shall be provided for all pipes passing through masonry walls, floors and ceilings as provided for in Section outlined "Supports and Sleeves".

6.7 Escutcheon Plates: Sprinkler piping passing through floors, walls and ceilings shall be provided with approved type, one piece or split type plates. Plates where pipe passes through finished ceilings shall be chromium plated. Other plates shall be of steel or cast iron, with aluminum finish. Plates shall be securely anchored in place with set screws or other approved positive means.

6.8 Fire Department Inlet Connections: Connections shall be provided 3 feet above grade, of the approved three way type with 2.5 inch National Standard female hose threads with plugs and chains, 6" inlet, and bronze escutcheon plate designated "STANDPIPE AND AUTOMATIC SPRINKLERS". For public works building use 2 way type with 4" inlet and bronze escutcheon designated "AUTO SPRINKLERS".

7. UNDERGROUND PIPING SYSTEMS:

7.1 Pipe and Fittings: Piping under the building and to the meter pit shall be outside coated, cement lined cast iron pipe and fittings conforming to NFPA 24, with the joints anchored by straps and rods in accordance with NFPA 24. Minimum pipe size shall be 6 inches. Minimum depth of cover shall be 3 feet. Piping beyond the meter pit as specified in Section entitled "Water Distribution System".

7.2 Valves: Valves shall be provided as required by NFPA 24 and of types approved for fire service. Gate valves shall conform to AWWA C500 with cast iron body and bronze trim, and shall open by counterclockwise rotation.

8. DISINFECTION: Water piping shall be disinfected in accordance with AWWA C601. Piping systems shall be filled with solution containing minimum of 50 parts per million of available chlorine and allowed to stand for minimum of 24 hours. Solution shall be flushed from systems with clean water until maximum residual chlorine content is not greater than 0.2 parts per million.

9. FIELD PAINTING: Sprinkler systems including valves, piping, conduit, hangers, miscellaneous metal work and accessories shall be painted. Paint shall be applied only to clean dry surfaces using clean brushes. Immediately after cleaning, the metal surfaces shall receive one coat of pretreatment primer conforming to MIL-P-15328 applied to a minimum dry film thickness of 0.3 mil, and one coat of primer conforming to TT-P-645 applied to a minimum dry film thickness of one mil. Due care shall be exercised to avoid the painting of sprinkler heads or protective devices. Materials which are used to protect sprinkler heads, while painting is in process, shall be removed upon the completion of painting. The Contractor shall remove all sprinkler heads which are painted and shall provide new clean sprinkler heads of the proper type at his own expense. Primed surfaces shall receive the following:

alarm signals when valve is closed. Wiring and remote alarm indication will be provided under Section entitled "Manual and Automatic Fire Alarm Systems".

Shutoff valves requiring alarm switches include: Sprinkler wet pipe, dry pipe, and pre-action shutoff valves, fire pump OS&Y valves, sprinkler main sectional valves, and exterior meter pit valve.

5.2 Water Flow Alarm: Provide where indicated DPST (double pole, single throw) vane type water flow switch with 10-60 sec. adjustable retard. Flow alarms shall be suitable for low voltage D.C. operation. Alarm indication and wiring for the building fire alarm system will be provided under section entitled "Fire Alarm System".

6. ABOVE GROUND PIPING SYSTEMS: Piping shall be run concealed in areas with suspended ceilings and shall be inspected, tested and approved before being concealed. Fittings shall be provided for changes in direction of piping and for all connections. Changes in piping sizes shall be made through standard reducing pipe fittings; the use of bushings will not be permitted. Jointing compound for pipe threads shall be pipe cement and oil, or graphite and oil. Short pipe nipples shall be extra strong.

6.1 Sprinkler Piping: Piping shall conform to NFPA 13.

6.2 Valves: Valves shall be provided as required by NFPA 13 and of types approved for fire service. Gate valves shall be open by counter clockwise rotation. Check valves shall be flanged, clear opening swing check type with flanged inspection and access cover plate. Provide automatic ball drips with drains where indicated.

6.3 Identification Signs: Properly lettered approved metal signs conforming to NFPA 13 shall be attached to each valve and alarm device. Design data nameplates shall be permanently affixed to the riser of each system.

6.4 Inspector's Test Connection: Test connections shall be provided 6 feet above the floor for each sprinkler system or portion of each sprinkler system equipped with a wet pipe alarm valve, dry pipe valve, or pre-action valve, and shall be located at the hydraulically most remote part of each system. Test connection and system drain for systems monitored by water flow switch shall be combined and consist of test valve, 1" sight glass, orifice plate to restrict discharge to equal that of one sprinkler, and auxiliary drain valve. Test connection shall be piped to a location where the discharge will be readily visible and where water may be discharged without damage.

6.5 Main Drains: Drains shall be piped to discharge at safe points outside each building or to sight cones attached to drains of adequate size to readily care for the full flow from each sprinkler drain under maximum pressure. Auxiliary drains shall be provided as required by NFPA 13. Drains to building exterior shall terminate at ground level and be provided with concrete splash blocks.

4.5.6 Wiring: AC operating power is provided under Section entitled "Interior Wiring Systems". Fire alarm and detector wiring is provided under section entitled "Manual and Automatic Fire Alarm System". Control wiring shall be provided under this section and shall conform to NFPA 70.

4.6 Wet Pipe Alarm Valve: Valve shall be of the variable pressure type complete with retard chamber and all accessories and appurtenances necessary for the proper operation of each system and to prevent false alarms due to surges or other conditions in the supply to each system.

4.6.1 Water Motor Alarm: Alarms of the approved weatherproof and guarded types to sound locally on the flow of water is each sprinkler system to which it is connected, shall be mounted on the outside of the outer walls of each building, at a location designated by the Contracting officer. Water motor alarm is only required for the public works building.

4.6.2 Pressure Switch: Switch with circuit opener or closer for the automatic transmittal of an alarm over the facility fire alarm system shall be provided and shall be connected into the fire alarm system. Alarm actuating device shall be of the mechanical diaphragm controlled water flow type with retard feature, which instantly recycles when pressure is released on the diaphragm; retard feature shall be adjustable from 10 to 60 seconds.

4.6.3 Wiring: Control and fire alarm wiring is provided under section entitled "Manual and Automatic Fire Alarm Systems".

4.7 Distribution of Water: Distribution shall be essentially uniform throughout the area in which it is assumed the sprinkler heads will open. Variation in discharge from individual heads in the hydraulically most remote area shall be between 100 and 120 percent of the specified density.

4.8 Friction Losses: Losses in pipe shall be calculated in accordance with the Hazen and Williams Formula with "C" value of 120 for underground cement lined cast iron pipe and asbestos cement pipe, 140 for aboveground copper pipe, and 120 for aboveground steel pipe.

4.9 Location of Sprinkler Heads: Heads in relation to the ceiling and the spacing of sprinkler heads shall not exceed that permitted by NFPA 13 for ordinary hazard occupancy, except for discharge density of more than 0.20 gallons per minute per square foot, the spacing of the sprinkler heads shall not exceed that for extra hazard occupancy. The spacing of sprinklers on the branch lines shall be essentially uniform.

4.10 Water Supply: Delete this paragraph in its entirety. on a pressure of

5. ALARMS:

5.1 Supervisory Alarm: Provide for each shutoff valve controlling the sprinkler system, an alarm switch suitable for low voltage D.C. operation;

4.5.1 Control of pre-action valve shall be through detection. Detectors, including wiring between detectors and pre-action valve control panel shall be provided under Section entitled "Manual and Automatic Fire Alarm Systems".

4.5.2 Control Panel: Control panel for electrically operated detection systems shall be of the modular type, installed in a surface mounted steel cabinet with hinged doors and cylinder lock. The control panel shall be a neat, compact, factory wired assembly containing all parts and equipment required to provide all specified operating and supervisory functions of the system. Batteries shall be located in a well constructed steel lockable cabinet. All cabinets shall be finished on the inside and the outside in enamel-finish with prominent rigid plastic or metal identification plates attached. All trouble lights shall be located on door of cabinet. System power shall be 120 volts A.C. service, transformed through a two winding isolation transformer and rectified to low voltage D.C. for operation of all system actuating, signal sounding, trouble signal and fire alarm tripping circuits. Electric detection system shall be electrically supervised against opens on all circuits. A ground fault condition which prevents the required operation of the system or a single break in any of the actuation system circuits shall result in the activation of a trouble signal. Loss of AC power shall result in operation of the system trouble alarm. Trouble alarm shall sound continuously until the system has been restored to normal. A silencing switch, which transfers touble signals to an indicating lamp, shall be provided and arranged so that correction of trouble condition will automatically transfer trouble signal form indicating lamp bakc to trouble alarm until the swtich is restored to normal position. Electrical control panels, batteries and battery charger for electrically actuated systems shall be located in areas where they will not be subject to water damage. Isolated form C contacts shall be provided for remote indication of valve release and trouble through the EMCS.

4.5.3 Secondary Power Supply: Nickel cadmium, lead calcium, or sealed lead acid, rechargeable storage batteries and battery charger.

4.5.4 Storage Batteries: Of the proper ampere-hour rating to operate the system and provide supervision for 2 hours. Calculations substantiating the battery capacity shall be submitted. Reliable separation between cells shall be provided to prevent contact between terminals of adjacent cells and between battery terminals and other metal parts.

4.5.5 Battery Charger: To provide completely automatic high/low charging rate and shall be capable of recovery of the batteries from full discharge to full charge in 24 hours or less. An ammeter for recording rate of charge and a voltmeter to indicate the state of battery charge, shall be provided. A red pilot light to indicate when batteries are manually placed on a high rate of charge shall be provided as part of the unit assembly if a high-rate switch is provided.

W201	Surgery Waiting Area
W202	Alcove
W202D	Alcove
W258	Ent/Eye Waiting Area
W259	Ent/Eye Control
W259C	Alcove
W259D	Alcove

4.2.2 Cabinet: Extra sprinkler heads and sprinkler head wrench shall be provided in cabinets at accessible locations approved by the Contracting Officer. The number and types of extra sprinkler heads shall be as specified in NFPA 13.

4.3 Standpipe hose valves shall be 2-1/2 inch size and shall be chrome plated with brass body, red enamel wheel handle, chrome plated cap and chain, and National Standard Threads. Provide 2-1/2 x 1-1/2 chrome plated reducer. Standpipe Hose Valve Cabinets shall be steel recessed type with flush trim. Interior of cabinet shall have white enamel finish; exterior of cabinet shall have prime coat finish. The door shall have full wire glass insert. Cabinet dimensions shall be 18" x 18" x 8".

4.4 Dry Pipe Valve: Provide where indicated on the drawings, a dry pipe valve with all accessories and appurtenances necessary for the proper operation of each system. Provision shall be made to prevent excessive water columning. Each system shall be provided with an approved automatic air maintenance device with low air pressure switch. Dry pipe valves controlling a system having a capacity greater than 500 gallon shall be provided with an approved quick opening device. System alarm switch with circuit opener or closer shall be provided and shall be connected to the fire alarm system. Alarm actuating device shall be of the mechanical diaphragm controlled water flow type without retard feature, which instantly recycles when pressure is released on the diaphragm. Low air pressure alarm shall be connected to the EMCS.

4.4.1 Wiring: Fire alarm wiring is provided under Section entitled "Manual and Automatic Fire Alarm Systems".

4.5 Pre-Action Valve: Provide where indicated on the drawings, electrically operated pre-action valves with all necessary pipe, fittings, gauges, valves, and appurtenances. In addition to automatic operation, each valve shall be arranged for manual release at the valve. A test detection device for each actuation circuit shall be provided adjacent to each valve which the device controls as required by NFPA 13. An air maintenance device, consisting of shut-off valve, filter, regulator, low pressure alarm switch with form C contacts, pressure gauge and check valve shall be provided. Low air pressure switch shall be connected to the EMCS. Pre-action valve clapper shall incorporate a mechanical latching mechanism that will not be affected by changes of pressure in the water system.

C100D	Corridor
C103	Telephone Alcove
C106	Day Nursery
C109	Outpatient Record Waiting
C120	Bank
C121	Pharmacy Waiting
C139	Admitting Disposition
C140	Work Area
C142	Interview
C143	Collection Agent
C147	Corridor
N139	Executive Officer
N142	Director of Clinical Services
N143	Alcove
N144	Administration
N144F	Alcove
N145	Commanding Officer
N146	Conference
S100	Corridor
S100A	Corridor
S100B	Corridor
S101	Pathology Control Area
S101A	Alcove
S119	Pathology/General Practice Waiting Area
S120	General Practice Control Area
S120E	Alcove
S120E	Alcove
W100	Patient Corridor
W100A	Patient Corridor
W102	OB/GYN Conference
W103	General Conference
W154	Cardiology/Internal Medicine Control Area
W154G	Alcove
W154H	Alcove
W155	Cardiology/Internal Medicine Waiting Area
C200	Balcony
C200C	Corridor
C204	Father's Waiting
C204A	Doctor Conference
C204C	Telephone
S200	Corridor
S200A	Corridor
S200B	Corridor
S214	Radiology Control Area
S225	Radiology/Orthopedic Waiting Area
S226	Orthopedic Control Area
S226D	Alcove
S226E	Alcove
W200	Corridor
W200A	Corridor

2-1/2". Dry pipe sprinkler systems and preaction sprinkler systems shall be provided as indicated on the drawings. Wet pipe sprinkler system with alarm check valve shall be provided in the public works building.

4.1 Water supply: The hospital hydraulic calculations shall be based on a pressure of 115 psig at the fire pump discharge. Hydraulic calculations for the public works building shall be based on a static pressure of 59 psig with 1650 gpm being available at a residual pressure of 49 psig at the junction with the new looped distribution piping.

4.2 Sprinkler Heads: Heads shall have nominal 1/2 inch orifice. Release element of each head shall be of the intermediate temperature rating or higher as suitable for the individual location where it is installed. Finish of ceiling plates and pendent sprinklers below suspended ceilings shall be chromium plated.

4.2.1 Sprinkler heads for the following rooms shall be fully recessed type, covered from view by a 4 inch diameter off white cover plate. The actuation assembly shall be designed to allow heat treansfer directly from the cover plate to the fusible link:

S239	Treatment Cubicles
S240	Treatment Room
S241	Clean Supply
S242	Work Area
S242A	Stretcher Entrance
S242B	Corridor
S243	Emergency Room
S244	Cardio Exam room
S246	Equipment Storage
S247	Control Area
C221	Cystoscopy #1
C224	Cystoscopy #2
C226	Recovery Room
C229	Isolation Recovery room
C247	Orthopedic OR #1
C250	Special Procedure OR #2
C252	Operating #3
C255	Operating Room #4
C257	Operating Room #5
C263	OB Recovery Room
C266	Delivery Room #1
C267	Delivery Room #2
C268	Delivery Room #3
C289	Intensive Care Bassinetts
C293	Observation Bassinetts
N009	Serving Area
C100	Main Lobby
C100B	Corrodor
C100C	Corridor

ready for use. Each system shall be designed and installed to give full consideration to built-in spaces, piping, electrical equipment, ductwork and all other construction and equipment to afford complete coverage and be free from operating and maintenance difficulties, all in accordance with detailed drawings to be submitted by the Contractor for approval by the Contracting Officer. Devices and equipment shall be of a make and type listed by the Underwriters' Laboratories, Inc., or approved by the Factory Mutual Laboratories. In each of the NFPA Standards referred to herein, the advisory provisions shall be considered to be mandatory, as though the word "shall" had been substituted for "should" wherever it appears; reference to the "authority having jurisdiction" shall be interpreted to mean the Contracting Officer. The work shall begin at the meter pit for hospital and 6" AFF for public works building.

3.1 Submittals Required: Before any work is commenced, the Contractor shall submit complete sets of working drawings of each sprinkler system, hydraulic calculations to show the basis for the design where required, graphs or tables showing the pressure-discharge relationship for the sprinkler heads; and full descriptive data for pipe, fittings, valves, alarms, sprinkler heads, hangers, devices, materials, and associated equipment to the Contracting Officer for approval. The Contracting Officer shall have the Atlantic Division, Naval Facilities Engineering Command, Fire Protection Engineer review and approve all submittals. Partial submission will not be acceptable. Descriptive data shall be annotated to show the specific model, type and size of each item the Contractor proposes to furnish. The drawings shall be in accordance with the requirements for "Working Plans" as specified in NFPA 13 and shall include all applicable data specified therein. No work shall begin until the design of the system and the various components have been approved by the Contracting Officer.

3.2 Instruction Manuals: Contractor shall furnish instruction manuals, containing complete instructions for the specific make and model of the equipment furnished. One copy of each instruction manual shall be placed in a flexible oil resistant, protective binder and mounted in an accessible location in the vicinity of each control valve. Three additional copies of the instruction manual shall be furnished to Contracting Officer.

3.3 As-Built Drawings: On completion of the work, the Contractor shall furnish to the Contracting Officer a complete set of as-built working drawings of each sprinkler system for record purposes. The as-built drawings shall be minimum size of 30 by 42 inches reproducible drawings on mylar film with title block (8 by 4 inches) similar to full size project drawings.

4. DESIGN OF SPRINKLER SYSTEMS: Design of sprinkler systems and standpipe shall be by hydraulic calculations and shall conform to NFPA 13 and 14 to the requirements as specified hereinafter, and as indicated on the drawings. In the hospital building, wet pipe sprinklers shall be specifically designed for each smoke zone area and shall be supplied by either one or two standpipe connections. Sprinkler piping shall not cross a smoke zone partition or serve more than one zone. Minimum size for standpipe risers in

SECTION 15514. SPRINKLER SYSTEMS

1. APPLICABLE PUBLICATIONS: The publications listed below, but referred to thereafter by basic designation only, form a part of this specification to the extent indicated by references thereto:

1.1 Federal Specifications:

TT-E-489F & Am 1	Enamel, Alkyd, Gloss.
TT-P-645	Primer, Paint, Zinc Chromate, Alkyd Type.

1.2 Military Specification:

MIL-P-15232C & Am 1	Primer, Pretreatment (Formula No. 117 for Metals).

1.3 American Water Works Association (AWWA):

C500-71	Gate Valves, 3 Inch Through 48 Inch, for Water and Other Liquids.
C601-68	Disinfecting Water Mains.

1.4 National Fire Protection Association (NFPA):

13-76	Sprinkler Systems.	
24-73	Outside Protection.	Change "24-73" to "24-77".
70-78	National Electrical Code.	

2. QUALIFICATIONS OF INSTALLER: Prior to installation, the prime Contractor shall submit data for the approval of the Contracting Officer which will show that he has successfully installed sprinkler systems of the same type and design as specified herein, or that he has a firm contractual agreement with a subcontractor having such required experience. The data shall include the names and locations of at least two installations where the Contractor, or the subcontractor referred to above, has installed such systems. The Contractor shall indicate the type and design of these systems and certify that these systems have performed satisfactorily in the manner intended for a period of not less than 18 months.

3. GENERAL REQUIREMENTS: Section entitled, "General Requirements Mechanical", apply to this section, with the additions and modifications specified herein. The work includes the designing and providing of approved automatic sprinkler systems to afford complete fire protection coverage throughout the hospital and public works building. The design, equipment, materials, installation and workmanship shall be in strict accordance with the required and advisory provisions of NFPA 13, except as specified otherwise herein. Each system shall include all materials, accessories and equipment inside and outside the building necessary to provide each system complete and

Z21.45 and a quick disconnect coupling conforming to ANSI Z21.41. The flexible connector shall be of sufficient length to permit movement of equipment for cleaning or easy access to the coupling for connections and disconnection, and shall be installed without being torqued. Evidence of conformance to ANSI Z21.45 and Z21.41 shall be submitted to the Contracting Officer for approval. Substitutions shall not be permitted.

4.5 Pipe Hangers, Supports and Sleeves: Installation of all pipe hangers, supports and sleeves shall conform to Section entitled Supports and Sleeves.

5. FIELD TESTS AND INSPECTIONS:

5.1 General: The Contractor Quality Control representative shall conduct inspections and witness all field tests specified. The Contractor shall perform all field tests, and provide all labor, equipment, and incidentals required for testing except that the Government will provide electric power required for field tests, when available. Any deficiencies found shall be rectified and work affected by such deficiencies shall be completely retested at the Contractor's expense.

5.2 Tests:

5.2.1 Tightness Test: Gas piping shall be tested for tightness in accordance with NFPA No. 54.

5.2.2 Leakage Check After Gas Turn On: Leakage check after gas is turned on shall be in accordance with NFPA No. 54.

5.2.3 Purging: Gas piping shall be purged in accordance with NFPA No. 54.

---END---

3.10 Semirigid Tubing and Fittings: Semirigid tubing and fittings shall conform to ANSI Z21.24.

3.11 Submittals Required: Shop drawings, manufacturer's data and certificates for equipment, materials, finish, and pertinent details for each system shall be submitted and approved before procurement, fabrication or delivery of such items to the job site. Partial submission will not be acceptable. Descriptive data shall be annotated to show the specific model, type and size of each item the Contractor proposes to furnish. The submittal requirements of Section entitled "General Requirements, Mechanical:, applies to the following lists. Items in the following lists (which are followed by (CO) shall be approved by the Contracting Officer.

3.11.1 Manufacturer's Data

(a) Tanks (CO)
(b) Specialties (CO)

3.12.1 Certificates of Compliance: Submit certificates from the manufacturer attesting that each of the following items conform to all requirements of this specification and of reference publications.

(a) Pipe and fittings
(b) Tanks (CO)
(c) Specialties (CO)

4. INSTALLATION:

4.1 General Installation for Gas Piping: Installation of gas piping and gas appliances shall conform to NFPA No. 54 and additional requirements herein. Gas piping shall be installed parallel with lines of the building. Pipe shall be cut accurately and shall be worked into place without springing or forcing. Piping shall be run concealed in finished rooms. A drip shall be provided at any point in the gas line where condensate may collect. The lower end of each vertical supply pipe near burners shall terminate with a tee, nipple, and cap to serve as a dirt trap. Where gas-burning kitchen equipment is located adjacent to other gas-burning kitchen equipment, a manifold shall be provided for the battery, and each end of the manifold shall be connected to the gas-distribution system in order to maintain uniform gas pressure at each piece of equipment. All pipe unions shall be located as to be accessible.

4.2 Gas Appliances: Installation of all gas piping and appliances shall conform to NFPA No. 54.

4.3 Joints: Joints shall be in conformance with NFPA No. 54.

4.4 Final Connections: All final connections to equipment shall be made using rigid pipe and fittings, except kitchen equipment which may be connectedto the piping system with a flexible connector conforming to ANSI

10.5.7 Safety Valves: The high pressure limit switch shall be locked out or otherwise made inoperative, and the boiler safety valves shall be lifted by steam. The relieving capacity, popping pressure, blowdown, and reseating pressure shall be determined by observation and measurement to be in accordance with the ASME Boiler and Pressure Vessel Code. The ASME standard symbol will be accepted only as indicating compliance with the design and material requirements of the code.

10.6 Capacity and Efficiency Tests: The capacity and efficiency tests shall be performed after satisfactory completion of all tests previously specified herein and after the boilers have been operating continuously for one day with no nuisance shutdowns and without the necessity for frequesnt or difficult adjustments. (These tests shall be performed on each boiler.) Tests shall be conducted using each of the specified fuels. The test procedures shall be in accordance with the input-output method of the ASME Power Test Code PTC 4.1 and shall be reported on the ASME Test Form for Abbreviated Efficiency Test. The duration of the tests shall be sufficient to record all necessary data but in no case shall it be less than 4 hours on each fuel.

10.7 Auxiliary Equipment and Accessory Tests: All blowdown valves, stop valves, try cocks, draft fans, fuel oil heaters, pumps, electric motors, and other accessories and appurtenant equipment shall be observed and checked during the operational and capacity tests for leakage, malfunctions, defects, noncompliance with referenced standards, or overloading, as applicable.

10.8 Feedwater Equipment Tests: The test of the feedwater treatment equipment shall be conducted by the Contractor concurrently with either the combustion test or the capacity and efficiency test to determine compliance with the limits for oxygen content and hardness concentrations of this specification. All equipment for taking samples and the test kit for analyzing the samples shall be supplied by the Contractor and shall revert to the Government when the tests are completed. Any deficiencies revealed during the test shall be corrected at no additional cost to the Government.

---END--

10.5 Operational Test: Add the following sentence. "Test procedures shall be submitted in detail at least 20 days prior to the actual testing."

shall also be recorded. Tests shall be run on each fuel until stack temperatures are constant and conformance with the combustion requirments of this specification have been verified and recorded. Proper operation of all instrumentation and gauges in the control panel shall also be verified during the test.

10.5 Operational Test: The boilers shall be tested continuously under varying load conditions to demonstrate proper operability of the combustion control, flame safeguard control, programming control, and safety interlocks. This test shall be conducted after the adjustment of the combustion controls has been completed under the combustion test. The operational test shall continue for a period of at least 8 hours and shall include the following:

10.5.1 Flame Safeguard: The operation of the flame safeguard controls shall be verified by simulated flame and ignition failures. Burners having intermittent pilots shall be tested by simulating main flame failure while the pilot is buring. The trial-for-pilot ignition, trial-for-main flame ignition, combustion control reaction, and valve closing times shall be verified by stop watch.

10.5.2 Immunity to Hot Refractory: The burner shall be operated at high fire until the combustion chamber refractory reaches maximum temperature. The main fuel valve shall then be closed manually. The combustion safeguard shall drop out immediately causing the safety shutoff valves to close within the specified control reaction and valve closing times.

10.5.3 Pilot Intensity Required: The fuel supply to the pilot flame shall be gradually reduced to the point at which the combustion safeguard begins to drop out (sense "no flame") but holds in until the main fuel valve opens. At this point of reduced pilot fuel supply, the pilot flame shall be capable of safely igniting the main burner. If the main fuel valve can be opened on a pilot flame of insufficient intensity to safely light the main flame, the boiler shall be rejected.

10.5.4 Immunity to Ignition Spark: Where ultra violet flame detectors are employed, the pilot and main burner manual safety shut off valves shall be closed. The burner shall then be operated through the trial for pilot ignition period. The flame safeguard relay shall not respond to the presence of electric spark. If the flame safeguard relay responds to the presence of electric spark the boiler shall be rejected.

10.5.5 Boiler Limit and Fuel Safety Interlocks: Safety shutdowns shall be caused by simulating interlock actuating conditions for each boiler limit and fuel safety interlock. Safety shutdowns shall occur in the specified manner.

10.5.6 Combustion Controls: The accuracy, range, and smoothness of operation of the combustion controls shall be demonstrated by varying the steam demand through the entire firing range required by the turndown ratio specified for the burner. The control accuracy shall be as specified.

10.2 Inspections: Change "48 hour advance written notice" to "10 days advance written notice."

Add to the following sentence. "The contractor shall furnish the fuel for all equipment tests."

without additional cost to the Government within time period specified by the Contracting Officer. A certified boiler inspector from LANTDIV shall be present at all inspections and field tests.

10.2 Inspections: All inspections and tests at the site shall be made under the direction of and be subject to the approval of the Contracting Officer. The contractor shall operate each boiler and all appurtenances prior to final testing and shall insure that all necessary adjustments have been made. A 48 hour advanced written notice shall be submitted to the Contracting Officer indicating the equipment is ready for testing. All testing equipment, including gauges, thermometers, calorimeter, Orsat apparatus, thermocouple pyrometers, fuel flow meters, water meters, and other test apparatus shall be provided by the Contractor and set up and calibrated prior to the test. Draft, fuel pressure, and steam flow may be measured by permanent gauges and meters installed under the contract. The Contractor shall be responsible for providing an analysis of the fuel being used for the tests. Control of noise levels developed by exhaust steam including muffler, globe and gate valves shall be as directed by the Contracting Officer. The tests shall include the following, and shall be performed when feasible, in the sequence as listed:

(a) Strength and Tightness tests.
(b) Standard compliance tests.
(c) Combustion tests.
(d) Operational tests.
(e) Capacity and efficiency tests.
(f) Tests of auxiliary equipment.
(g) Feedwater equipment test.

10.3 Strength and Tightness Tests: Each boiler shall be subjected to the following strength and tightness tests:

10.3.1 After installation ... Delete the first two sentences and replace with the following. "After installation and connection, each boiler shall be subjected to an inspection and hydrostatic test at design pressure to determine that the boiler and appurtences have not been damaged in transit or handling. The hydrostatic tests shall be in accordance with the ASME Code."

~~shall be in accordance with the ASME Code with the test pressure applied for a period required by the Contracting Officer~~. This test shall be in additional to the hydrostatic tests performed at the factory.

10.3.2 The part of the preassembled fuel oil system that is furnished integrally with the boiler shall be hydrostatically tested at 1-1/2 times the maximum operating pressure.

10.4 Combustion Tests: The fuel burning and combustion control equipment shall be tested with each of the specified fuels at the minimum limit of the turndown range and at increments of 50, 75, and 100 percent of full rated load. Tests shall be conducted by factory-trained combustion equipment engineers as previously specified. Test data shall be analysed and graphically presented to show for each boiler at tested loads; rates of steam flow: flue gas temperature; percentages of carbon dioxide, carbon monoxide, oxygen, and nitrogen in the flue gas and percent excess air. The steam quality

9.2 Equipment Foundations: Equipment foundations shall be located as shown on the drawings and shall be of sufficient size and weight and of proper design to preclude shifting of equipment under operating conditions or under any abnormal conditions that could be imposed upon the equipment. Foundations shall meet the requirements of the equipment manufacturer. Equipment mounted on concrete foundations shall be grouted before piping is installed. All piping shall be installed in such a manner so as not to place a strain on any of the equipment.

9.3 Welding: Welding shall be in accordance with the applicable sections of the ASME Code.

9.4 Painting: Equipment shall be factory finished to withstand the intended end use environment in accordance with the specifications for the particular item. Factory-finished equipment on which the finish has been damaged shall have damaged areas retouched and then be given a complete finish coat to restore the finish to its original condition. The finish coat shall be suitable for exposure in the intended end use environment.

9.5 Boiler Cleaning: After installation, each boiler shall be boiled out, under supervision of the manufacture, with soda ash or equivalent solution to clean all internal surfaces of oil, grease, mill scale, and dirt. The boiler and associated piping shall then be drained and refilled with treated softened water. At all times after initial cleaning, it shallbe the responsibility of the Contractor to protect the boiler, tanks, and piping against internal corrosion until testing is completed and the boilers are accepted. All chemicals, labor for introducing chemicals, and professional services for control and supervision of the treatment process shall be provided by the Contractor.

9.6 Piping: Material and installation requirements including welding shall be as specified in Sections entitled "Steam Distribution", "Gas Piping", Fuel Oil Handling System", and "Plumbing".

10. FIELD TESTS AND INSPECTIONS:

10.1 General: The Contractor shall be responsible for the performance of all inspections and tests as specified herein to demonstrate that the boilers and auxiliary equipment, as installed, are in compliance with contract requirements. During start-up or during the test, factory-trained engineers for technicians employed by individual suppliers of such components as the burner, flame safeguard and combustion controls, feedwater treatment equipment, and other auxiliary equipment shall be present, as required, to insure the proper functioning, adjustment, and testing of the individual components and systems. A detailed written record of the start-up performance, including burner setting data over the entire load range, shall be furnished before the Contractor's and sub-contractor's test personnel leave the site. All labor, equipment, and test apparatus shall be furnished by the Contractor. The Government will furnish water, electricity, and fuel. All defects disclosed by thes tests shall be rectified by the Contractor

(17)	pH	8.3-8.8
(18)	Max. Inlet Temp.	180°F

The raw water will be delivered to the equipment from the water distribution system of the base at a normal pressure of 70 psig measured at the booster pump discharge.

8.3.2 Water Softener: The water softener equipment shall be of the type, size, and arrangement indicated. When operating under the indicated design conditions the unit shall reduce the effluent hardness to 0 to 5 mg/liter.

8.3.2.1 Zeolite Water Softener: The zeolite softeners shall conform to MIL-W-17121 and shall have automatic controls. The softeners shall be equipped for a sodium cycle. Each softener tank shall be provided with an operating valve to permit the regeneration of one tank while the other is in service.

8.3.3 Chemical Feeders: The chemical feeders shall be sized and connected as indicated and shall be suitable for the flow, pressure, and temperature conditions at the point of connections. Chemical feed storage shall be provided as indicated. The feeders shall be of metering pump type conforming to the requirements of MIL-W-17122 for chemical feeders. Provide dry contact for remote low level alarm.

RFP-63-C/O #40 Delete

8.3.4 Feedwater Test Equipment: Feedwater test equipment for determining the condition of the boiler water shall include an assembly of indicator solutions, standardized solutions and test glassware with cabinet. The solution types shall permit tests for water hardness, total alkalinity, hydroxide, carbonite alkalinity, and chloride content in milligrams per liter. They shall employ a standardized soap solution for hardness test and a dilute sulfuric acid solution with a methyl orange indicator for total alkalinity. The hydroxide and carbonate alkalinity shall be determined with a phenolphthalein indicator and the chloride content, with a silver nitrate solution. Standardized phenolphthalein color slides shall be furnished for accuracy in alkalinity tests.

9. INSTALLATION:

9.1 General: The Work shall be arranged in a neat and orderly manner so that minimum storage of equipment and material is required at the project site. The equipment and material shall be installed in accordance with the best commercial practices. All systems shall be neat in appearance, compact, workmanlike in construction and assembly, and installed for long and continuous service. All parts shall be readily accessible for inspection, repair, and renewal. The equipment and material shall be inspected upon delivery and shall be tested after installation. Material and equipment shall be protected from the weather. Any damage caused by the Contractor in the execution of the work shall be repaired and left in a condition equal to that existing before the work was started.

or peripheral-turbine type with cast iron casing and shall be bronze fitted. For turbine type pumps, pressure relief valves shall be provided, and for centrifugal type pumps, by-pass orifices shall be provided. Packed stuffing boxes or mechanical seals suitable for the design conditions indicated shall be provided. Pumps shall be designed for the capacity, discharge head, and water temperature indicated. Pump motors shall be drip proof for operation at 460 volts, 3 phase, 60 hertz.

8.2 Deaerator: The deaerator shall be of the pressurized packaged type conforming to MIL-H-17660 and any additional requirements specified herein. Deaerating assembly and deaerated water storage may be in the same or separate shells. When external vent condensers are provided, they may be located as recommended by the manufacturer. A pressure relief valve sized in accordance with Table II of MIL-H-17660 shall be provided. Inlet piping and accessories shall be as indicated. Feedwater pumps, as specified herein, interconnecting piping, wiring and control box shall be provided as part of the deaerator package. Deaerator capacity shall be not less than indicated. The temperature of the water delivered at maximum capacity shall be equivalent to saturated steam temperature at the operating pressure of the deaerator, which shall be as indicated and the oxygen content shall not exceed 0.005 cubic centimeters per liter as determined by the Referee Method A (Colorimeter Indigo Carmine) of ASTM D888. Water storage capacity shall be sufficient to operate the boilers at maximum capacity for 20 minutes. Provide auxiliary N.O. Contact in each motor starter for connection to the EMCS.

8.3 Feedwater Treatment Equipment:

8.3.1 Feedwater Characteristics: Equipment for the chemical treatment of the boiler makeup feedwater shall be designed to reduce the boiler water concentrations to the limits specified by the American Boiler Makers Association when handling raw water having the following impurities reported as milligrams per liter (formerly parts per million):

(1)	Total hardness as CaC03	63
(2)	Calcium hardness as CaC03	51
(3)	Magnesium hardness as CaC03	12
(4)	Alkalinity as CaC03	80
(5)	Sodium as Na	9
(6)	Chloriodes as C1	6.95
(7)	Sulfites as S03	-
(8)	Sulfates as S04	2
(9)	Phosphate as P04	-
(10)	Silica as Si04	19.63
(11)	Nitrates as N03	.09
(12)	Iron as Fe	<.01
(13)	Free carbon dioxide as C02	-
(14)	Total dissolved solids	114
(15)	Suspended solids	-
(16)	Dissolved Oxygen	6.2

6.8.3 The interior of the flue gas shell shall be cleaned and coated with a suitable acid resistant coating.

6.8.4 The manufacturer shall guarantee as to workmanship and material, all stacks for a period of ten (10) years from date of installation. This guarantee shall cover all normal specified usages; weather and operating conditions; structural strength; wind and corrosion resistance.

7. BLOWDOWN EQUIPMENT:

7.1 General: The boiler shall be furnished with all equipment, tanks, and controls necessary for bottom and continuous blowdown of the boilers. The equipment for bottom blowdown system shall be a blowdown separator. Continuous blowdown systems shall be of the packaged, proportional type consisting essentially of a heat exchanger, flow control valve, and flash tank. Blowdown equipment shall be installed and piped as indicated, and shall conform to the recommendations of the National Board of Boiler and Pressure Vessel Inspectors in their Recommended Rules for National Board Boiler Blowoff Equipment.

7.2 Bottom Blowdown Separator: The blowdown separator shall be fabricated of welded steel plate in accordance with Section VIII of the ASME Boiler and Pressure Vessel Code. The tank shall be of vertical cylindrical tank designed for the working pressure of the boilers. The tank shall be equipped with a tangential blowdown inlet located so as to impinge on a carbon steel wear plate extending at least 180 degrees around the interior circumference of the tank from the point of inlet. The tank also shall be equipped with vent and drain connections, drain tempering fitting, cooling water control valve, and angle legs for floor mounting. The blowdown separator shall be sized and located as shown on the drawings.

7.3 Continuous Blowdown System: The continuous blowdown system shall be a complete packaged unit of the manual-apportioning type. The system shall include a 50 psig, ASME flash tank with relief valve and gauge glass, inlet manifold with three manual flow control valves, float type drainer, 150 psi design heat exchanger, steel frame, and necessary piping. The heat exchanger shall consist of a steel shell and heads with type 304 stainless steel tubes arranged in a removable U-bend bundle. The exchanger shall be constructed and tested in accordance with Section VIII of the ASME Code. Manual apportioning valves shall have bronze bodies with stainless steel seats and disks and shall be of the indicating type specifically designed for blowoff service. The blowdown system shall be complete with strainers, stop valves, thermometers, and other accessories necessary to form complete packaged units. Provide dry contact for high level alarm.

8. FEEDWATER EQUIPMENT:

8.1 Boiler Feed Pumps: Boiler feed pumps shall conform to MIL-P-17552 for motor driven, horizontal split case or support head boiler feed pumps except as otherwise specified herein. Pumps may be of either the centrifugal

(2)	Shell plate in tension	20,000 psi
(3)	Butt welds for shell plate in tension	20,000 psi
(4)	Butt welds for shell plate in compression	20,000 psi

6.6 Welding:

6.6.1 Stack sections shall be connected together by continuous full penetration structural welds. Qualification of welding procedures and operations shall be as prescribed by standard "Qualification Procedure" of the American Welding Society.

6.6.2 Welders shall meet the Qualification of the American Welding Society or American Society of Mechanical Engineers. No welder shall be employed on the work who has not been fully qualified under the above specified procedures and so certified. A copy of each welder's qualification certificate in conformance with the provisions of the codes having jurisdiction, showing that the operator was tested under the Procedure Specifications, shall also be submitted to the Contracting Officer for approval.

6.7 Tolerances:

6.7.1 The cross section of the chimney shall be circular and its centerline plumb. allowable construction tolerances shall be as follows:

(a) diametrical out-of roundness paired-1/8" plus or minus.

(b) Vertical waviness in 10 feet-1/8"

(c) Adjoining sections to be paired as close as possible and not to exceed 1/16"

(d) Plumbness of center 1" per hundred feet

(e) Local dents in plates shall be no deeper than one half of plate thickness.

(f) Welded plates shall be so aligned that the centerlines of adjoining plate edges shall not have an effect from each other larger than 25% of the plate thickness.

6.8 Protective Coating:

6.8.1 ASTM A242 Steel outer shell shall be adequately power wire-brushed to remove mill scale and weld splatter.

6.8.2 All exterior A36 steel shall be power wire-brushed and all welds chipped, solvent washed, and primed.

lights. Each system shall terminate with suitable connectors at the base of the stack. Conduit and wiring shall conform to the National Electrical Code.

6.5.6 The insulation between inner and outer shells shall be of suitable thickness to limit the outer skin temperature to 120°F, and/or prevent the flue gas temperature from falling below its dewpoint at all load conditions.

"6.5.7xx The stack manufacturer shall submit calculations and plans showing attachment of the stack to the foundation, design loads and their location. The foundation shown is the minimum acceptable foundation. If the stack furnished requires changes in the foundation, the manufacturer shall have the foundation designed by a registered professional engineer and submit same to the Contracting Officer for approval. Any redesign and/or alterations to the stack foundation shall be the responsibility of the Contractor at no additional cost to the Government."

6.5.8 The stack manufacturer shall design the stack to withstand all structural and stress conditions including the following wind loads without guys:

Roof - 45'	38 lbs. per square foot
45'-60'	41 lbs. per square foot
60'-80'	45 lbs. per square foot
80' & higher	48 lbs. per square foot

6.5.9 Complete calculations shall be submitted to the Contracting Officer at the same time that shop drawings are submitted for approval. Calculations shall account for resonant vibration characteristics of the stack. The review shall not constitute checking or approval and shall in no way relieve the stack manufacturer of his full responsibility for the accuracy of his calculations and the ultimate safety and structural integrity of the stack.

6.5.10 Calculations shall include design of all components and connections and shall fully cover stress conditions and necessary reinforcement around openings. All welds shall be properly designed and their size and extent clearly shown on the shop drawings.

6.5.11 The detailed design shall take into consideration shipping and construction procedures and adequately provide for any stresses which might develop there from or from dynamic forces due to wind during construction.

6.5.12 Maximum outer shell allowable stresses (from all forces including wind to be used in the detailed design shall be as follows for ASTM A242 structural steel plate:

(1) Shell plate = Compress Fx = $2.1 \times 10^6 \times t/r$ but not exceeding 20,000 psi.

Where t = plate thickness - r = stack radius in inches

(1) Shielded Metal Arc — Class E 80

(2) Submerged Arc — SAW 80

(3) All weld metal must be equivalent to the base material in strength, corrosion resistance and weathered appearance.

6.4.3 Condition weathering steel and all welds to appear weathered.

6.4.4 The stack flanges, base plate and ring, stiffeners and all component parts to be ASTM A36 steel.

6.4.5 Filler metal for A36 welding shall conform to AWS Code and the following requirements:

(1) Shielded Metal Arc — Class E 60

(2) Submerged Arc — SAW 60

6.4.6 The inner structural/flue gas shell shall be ASTM A36 steel.

6.4.7 Expansion joints shall be made of the respective shell material.

6.4.8 Stack flanges to be 3/8" minimum thickness A36 steel.

6.4.9 Anchor bolts shall be hot dip galvanized ASTM A307 type steel.

6.5 Design:

6.5.1 The stack shall fully conform to the overall dimensions and appearance characteristics shown on the drawings and herein specified.

6.5.2 The stack shall be 85 feet in height fabricated in three flanged sections as follows: (all dimensions are the inside diameter of the inner flue gas shell.) The top 25 foot section shall taper from 45" I.D. to 25" I.D. The middle 35 foot section shall be 45" I.D. The bottom 25 foot section shall taper from 68" I.D. to 45" I.D.

6.5.3 The boiler manufacturer shall confirm the stack and breaching furnished are suitable for use with the boiler at the time of bid. Any changes required by the boiler manufacturer shall be included in the bid price.

6.5.4 The bottom section shall be furnished with flanged flue gas inlet, insulated sloping false bottom with drain connection, clean-out door, and instrumentation connections as required for the boilers.

6.5.5 The top section of the stack shall have a lightning protection system conforming to UL Master Label "C" and two type EOC #44505A obstruction

Anchor bolts and pipe sleeves for anchor bolts

Access clean out doors

Lightning protection

Aircraft clearance lights

Rub plates

Other accessories or appurtenances not specified but which are resonably required to make a complete, well integrated unit.

6.2 Submittals

6.2.1 Submit design computations to the Contracting Officer verifying the detailed design and shop drawings, including:

Foundation Design Load Computations.

Stack Design Detail Computations.

Detail Dynamic Stability Computations

Detail Design Drawings

Detail Erection Drawings

The above required computations shall cite the origin of formulae and criteria.

6.3 Manufacturing:

6.3.1 The stack shall be the product of an established and respectable manufacturer who has had at least 5 years experience in the successful manufacturer and erection of double wall steel stacks and can show evidence of having made similar installations which have operated successfully for at least 3 years.

6.4 Materials:

6.4.1 The stack outer shell shall be weathering type low alloy high strength sheet or plate conforming to ASTM A242 such as "MAYARI-R" or "CORTEN A".

6.4.2 Filler metal for welding A242 shall conform to AWS Code and the following requirements:

weld, flanges, or couplings. Suitable cleanouts shall be provided that will permit cleaning the entire breeching without dismantling.

5.2 Rectangular Breeching: All structural materials shall comply with the applicable sections of the American Institute of Steel Construction Specification for Design, Fabrication, and Erection of Structural Steel. All shop connections may be welded or bolted as required for joining breeching to equipment. Hot dipped galvanized bolts and lock washers shall be supplied for bolted connections, shall be not less than 3/8 inch in diameter, and spaced not more than 3 inches apart. All bolted joints shall be furnished with 1/8 inch-thick asbestos gaskets. Breeching plate shall be not less than 3/16 inch-thick. Welds shall conform to AWS D1.1. Breeching system shall provide for maximum expansion and contraction. Expansion joints shall be of the guided flexible crease type with flexible element of not less than 0.0625 inch-thick stainless steel. Access doors shall be provided and shall be cast iron or reinforced steel plate with asbstos gaskets 1/8 inch thick and positive closing latches of sufficient number to ensure a gas-tight seal. All breeching shall be thoroughly cleaned of rust and scale after fabrication by commercial sand blasting.

5.3 Breeching Hangers: Breeching hangers shall be designed to carry not less than five times the breeching weight. Hangers for round breeching shall be of the band type with hanger rods. Hangers for rectangular breeching shall be of the trapeze type with angle support member and hanger rods. All hangers shall be of steel.

5.4 Cleanout Doors: Cleanout doors shall be secured to the ends and sides of the breeching where required to effectively clean the breeching. Cleanout door shall be constructed of a gage steel not less than that of the breeching and shall be secured to a 1-1/4-inch-by 1-1/4-inch angle frame not less than 1/8 inch in thickness with mounting bolts welded to the angle frame and spaced not over 6 inches on center; provide 1/16 inch-thick long fiber asbestos gasket between cleanout doors and frames. Doors shall be squared and shall be full height of diameter or side of breeching up to a size of 24 inches by 24 inches maximum, except that cleanout doors less than 12 inches in height shall be rectangular and shall be 12 inches in length. Plug type cleanouts are not acceptable.

"5.5 Dampers. Provide manual damper with locking device designed for boiler exit gas temperatures and differential pressures. Provide round damper for round breeching or multi-bladed damper for rectangular or square breeching. Shaft bearings shall not be located in the flue gas stream. Dampers shall be suitable for on-off and balancing service. Dampers shall be attached to breeching with 1/8 inch thick asbestos gaskets and with bolted connections providing a gas tight seal. All damper structural materials shall comply with the applicable sections of the American Institute of Steel Construction's Specification for Design, Fabrication and Erection of Structural Steel. Welds used in damper construction shall conform to AWS D1.1."

Expansion device, truncated cones and breeching openings.

output, accuracy 0.25% of full scale, complete with calibrated orifice plate for installation between slip-on flanges and mounting bracket.

(d) Fuel flow meter: Fuel flow meter shall be in accordance with MIL-M-18294, Style A, with pulser head.

4.2 Boiler Plant Controls and Instruments: The following plant instruments shall be provided:

(a) Orsat Gas Analyzer: A flue gas analyzer, Orsat type, conforming to MIL-A-18218, shall be provided. The analyzer shall determine the CO2, CO, O2 in the flue gas and shall be complete with chemicals and accessories for use in such determinations.

4.3 Boiler Control and Instrument Cabinets: Boiler control and instrument cabinets shall be as specified in the referenced boiler specifications and shall be mounted, wired, and piped on the boiler front.

4.4 Boiler Auxiliaries: The following auxiliaries shall be provided:

(a) Sample Cooler: Each boiler shall have a water-cooled shell and tube type heat exchanger designed for cooling sample of boiler water prior to chemical testing, mounted and piped on the boiler. The cooler shall consist of a cast iron or steel shell with copper or copper alloy tubes and shall be equipped with a brass or bronze sampling cock. A concentrometer kit containing all necessary glassware, reagents, and instructions for determining boiler water concentration shall be furnished.

(b) Oil Heater: Each boiler shall have a steam fired fuel oil heater capable of raising the oil temperature a minimum of 100° F. The heat exchanger shall have carbon steel shell and tubes and be complete with steam control valve activated by a pneumatic, indicating viscosity control system, condensate trap, manual valve strainers, and piping as required. The complete unit shall be mounted and piped on the boiler.

4.5 Noise Levels: The sound pressure level near boiler operating at rated output shall not exceed 85 decibels as measured on the A scale, at 5 points located 5 feet from the boiler and five feet apart. Octave band data shall be taken and recorded. Sound level meter and octave band analyzer shall be as specified in Section entitled "Testing and Balancing Air and Water Systems".

5. BOILER BREECHING:

5.1 Round Breeching: Round breeching shall be constructed of black iron or steel in accordance with NFPA No. 211 for metal connectors for medium-heat appliances and shall be constructed with welded seams and joints. Round breechings also may consist of approved factory-built chimney sections for medium-heat appliances if the sections are joined together with continuous

3.7 Submittals: Submittals required include; shop drawings, manufacturer's data and certificates for equipment, materials, finish, and pertinent details for each system and shall be submitted and approved before procurement, fabrication or delivery of such items to the job site. Partial submission will not be acceptable. Descriptive data shall be annotated to show the specific model, type and size of each item the Contractor proposes to furnish. The submittal requirements of section entitled "General Requirements, Mechanical", applies to the following lists. Items in the following lists which are followed by (CO) shall be approved by the Contracting Officer.

3.7.1 Manufacturer's Data:

(a) Boilers, including instrumentation and auxiliaries (CO)
(b) Stack & Breeching (CO)
(c) Blowdown Separator
(d) Continuous blowdown System (CO)
(e) Boiler Feedwater Pumps (CO)
(f) Deaerator (CO)
(g) Water Softener (CO)
(h) Chemical Feeders
(i) Detailed boilers test procedures and personnel who will perform the tests.

4. BOILERS: ~~Boilers shall be firetube, packaged type of standard duty conforming to MIL-B-17452 and shall have gross output capacity of at least 11,716,000 Btu per hour when operating at a steam pressure of 125 pounds per square inch gage (psig) at the site under design conditions when the burner is firing No. 6 oil conforming to ASTM D396 having a higher heating value of 150,000 Btu per gallon.~~ No. 2 diesel fuel will be used to cold start boilers. Smoke emission shall not exceed Ringlemann No. 1, except during start-up, cleaning, or soot blowing. Burners of the rotary type are not acceptable. Programming controls shall be of the automatic recycling type and shall incorporate means for automatic self-checking of the circuit at the beginning of each start-up cycle. Combustion controls, shall be of the modulating-positioning type with a minimum turn down ratio of 8:1. Connections shall be provided for remote stopping of the boilers. Connections shall be provided for interlocking the boiler room supply air fan. An extra N.O. contact shall be provided in the forced draft fan starter for connection to the EMCS. The boiler shall have a minimum efficiency of 80% at design conditions.

Add the following sentence: "Minimum steam quality shall be 99.5% with the water quality in accordance with ABMA standards."

4.1 Boiler Instrumentation: In addition to the instruments required by the boiler specifications referenced above, the following instruments shall be provided and located where recommended by instrument manufactuer:

(a) A flue gas temperature gage conforming to GG-T-321.

(b) A draft gage, single point, conforming to MIL-G-17787.

(c) Steam flow transmitter: Electronic differential pressure transmitter with integral square root extractor. Nema 4 enclosure, 316 stainless steel wetted parts, 115 VAC supply voltage, 4.0 to 20.0 milliamp DC

4. BOILERS: Delete the first sentence and replace with the following. "Boilers shall be fire tube packaged type of standard duty conforming to MIL-B-17452 and shall have a gross output capacity of at least 11,716,000 BTUs per hour each when operating a steam pressure of 125 pounds per square inch gauge at the site, when the burner is firing No. 6 fuel oil conforming to ASTM D396 having a higher heating value of 150,000 BTUs per gallon."

3.4 Service Availability: The Contractor shall submit a certified list of qualified permanent service organizations for boilers, boiler controls, instrumentation and feedwater equipment which includes their addresses and qualifications. These service organizations shall, in the opinion of the Contracting Officer, be reasonably convenient to the equipment installation site and shall be able to render satisfactory service to the equipment on a regular and emergency basis.

3.5 Supervision:

3.5.1 General: The Contractor shall provide the services of a qualiied engineer or technician for start-up and tests and installation of equipment as specified below. A printed certified qualification resume' of the engineer or technician shall be submitted to the Contracting Officer. The Contracting Officer reserves the right to reject the engineer or technician propsed if the engineer's or technician's qualifications are not suitable or are questionable. The engineers or technicians resume; shall list all applicable experience related to installation, start-up and testing of equipment and applicable factory training and education. A written schedule with dates of start-up, test, installation, and checkout of equipment shall be submitted to the Contracting Officer. After installation of equipment the engineer or technician shall provide a signed certificate or certified written statement that the equipment is installed in accordance witht he manufacturer's recommendations. More than one engineer or technician may be provided based on the types of specific equipment. In the event that more than one engineer or technician is provided, a certified resume for each one shall be provided and their specific spcialty and item of work shall be indicated on the resume'. One engineer or technician as appointed by the Contractor shall supervise and be responsible for the overall installation, start-up, test, and checkout of systems.

3.5.2 Start-Up and Test: In addition to the requirements above, the start-up and test engineer or technician shall be approved by the manufacturer of the specific piece of equipment including boiler, boiler controls, boiler instrmentation, and feedwater equipment. The start-up and test engineer or technician shall remain on the job until the unit has been in successful operation for three days, and accepted by the Contracting Officer.

3.6 Boiler Certification: The boiler manufacturer shall submit evidence satisfactory to the Contracting Officer or his authorized representatives that the boilers meet the requirements of the standards specified below. Acceptable evidence of meeting these standards will be the official UL listing mark prescribed in the UL gas and oil equipment list for oil-fired, gas-fired, or gas and oil-fired boiler assemblies, as applicable plus the appropriate official ASME symbol stamp. In lieu of the above certification, acceptable evidence of meeting the requirements of one or more of the standards specified below will be a certified test report from an independent testing laboratory, selected by the manufacturer and approved by the Contracting Officer, indicating that the boilers and accessories have been inspected and tested and meet all requirements of the applicable standards specified below.

3.6 Boiler Certification: Delete the last four words of the first sentence, "the standards specified below," and replace with "this paragraph."

B75-77	Seamless Copper Tube.
B111-77	Copper and Copper Alloy Seamless Condenser Tubes and Ferrule Stock.
B395-77	U-Bend Seamless Copper and Copper Alloy Heat Exchanger and Condenser Tubes.
D396-76	Fuel Oils.
D888-66 (1971)	Test for Dissolved Oxygen in Industrial Water.

1.6 American Welding Society (AWS) Publication:

D1.1-75	Structural Welding Code.

1.7 National Board of Boiler and Pressure Vessel Inspectors:

Recommended Rules for National Board Boiler Blowoff Equipment.

1.8 National Fire Protection Association (NFPA) Publications:

NFPA No. 70-78	National Electrical Code.
NFPA No. 211-72	Chimneys, Fireplaces and Venting.

2. DESCRIPTION: The work includes the steam boilers, controls, breechings, stack, blowdown equipment, and feedwater equipment.

3. GENERAL REQUIREMENTS: Section entitled "General Requirements, Mechanical", with the following additions and modifications, applies.

"3.3.1x If the steam generating units and related equipment provided require changes to the superstructure, substructure or piling, the contractor shall submit to the contracting officer for approval, drawings and the design analysis for the necessary modifications. The contractor shall bear the full cost of all changes required. Changes or additions which deviated from the drawings such as pilings, structures, foundations, platforms, stairs, mechanical or electrical work caused by the contractor's choice of equipment or materials shall be included in his bid and shall be incorporated at no additional cost to the government. The contractor shall submit all layout and detail equipment or materials to the contracting officer for approval before construction or fabrication begins."

3.3 Proven Design: Boilers and feedwater equipment installed shall be of proven design which has been tested, successfully installed and operated in commercial or industrial installations. Prior to commencement of construction the Contractor shall provide to the Contracting Officer a certified written report from the boiler and feedwater equipment manufacturers indicating date of installation, type, model, capacity and address location of installed boilers. The above information shall be submitted to show that substantially identical equipment of comparable capacity (within 20 percent) has been successfully installed and operated in not less than three installations under similar operating conditions for a period of not less than two years.

SECTION 15631. STEAM BOILERS AND EQUIPMENT

In the section heading, delete "500,000 to 18,000,000 BTU's per hour".

SECTION 15631. STEAM BOILERS AND EQUIPMENT (500,000 - 18,000,000 BTU/HR)

1. APPLICABLE PUBLICATIONS: The following publications of the issues listed below, but referred to thereafter by basic designation only, form a part of this specification to the extent indicated by references thereto:

1.1 Federal Specifications:

GG-G-76D	Gages, Pressure and Vacuum, Dial-Indicating.
GG-T-321C & Am 1	Thermometer; Self-Indicating, Liquid-In Glass.
VV-F-815C	Fuel Oil, Burner.
WW-T-799E	Tube, Copper, Seamless, (For Use with Solder-type or Flared Fittings).

1.2 Military Specifications:

MIL-W-17121D	Water Softener Unit, Zeolite Pressure Type.

1.2 Military Specifications: Delete "MIL-B-17452C & Am 1" and replace with MIL-B-17452D".

MIL-P-17552C & Am 1	Pumps, Centrifugal, Water, Horizontal, General Service and Pumps, Centrifugal, Water, Horizontal, Boiler Feed, Electric Motor or Steam Turbine Driven.
MIL-H-17660B	Heaters, Fluid, Deaerating (For Water Only).
MIL-P-17749C	Pumping Units, Condensate, Heating and Pumping Units, Vacuum Heating.
MIL-G-17787B	Gages, Dial Indicating, Furnace Draft.
MIL-F-18113C	Feeders, Boiler Water Treatment, By-Pass and Compound Receiver Types.
MIL-A-18218	Analyzer, Flue-Gas, Orsat-Type, Portable.
MIL-M-18221B	Meters, Flow Rate, Indicating.
MIL-B-18796D	Burners, Oil, Gas, and Gas-Oil Combination (720,000 Btu/Hr and Higher Input Capacity).
MIL-M-18294B	Meter, Fluid Quantity Volumetric.

1.3 American Institute of Steel Construction (AISC) Publication:

Specification for the Design, Fabrication and Erection of Structural Steel for Buildings.

1.4 American Society of Mechanical Engineers (ASME) Publications:

ASME Boiler and Pressure Code: Section VIII - Pressure Vessels - 1977 (including all addenda thru Summer - 1978).

ASME Power Test Code: PTC 4.1 - Steam-Generating Units.

1.5 American Society for Testing and Materials (ASTM) Publications:

1.2 Military Specifications:

Change "MIL-B-17452C & Am 1" to "MIL-B-17452D".

7.2 Field Tests: In the last sentence, delete "when practical". Add the following sentence. "All piping shall remain uncovered and available for visual inspection until field testing is successfully completed."

incidentals required for field testing. When practicable, testing shall be done after the work is placed in its final position.

7.2.1 Piping: Fuel oil piping shall be subjected to a leakage test employing oil as the test medium at 1-1/2 times its maximum operating pressure 7.2.1 Piping: At the end of this paragraph add the following: "Oil for this testing shall be provided by Contractor."

7.2.2 Testing Protective Coatings on Buried Piping and Tanks: Protective coating for buried piping and tanks shall be tested for thickness, holidays and pin holes. Thicknesses shall be measured by commercial film thickness gages, except that thickness of enamel coatings may be determined by cutting tiny holes in the coating by the twist of a knife and measuring the thickness with a pit-depth gage. Enamel coatings on piping and on tank exteriors shall be tested for pin holes, holidays, and other defects with an electrical flaw detector. The electrical flaw detector shall be an approved type delivering approximately 8,000 to 10,000 volts low amperage. Areas where arcing occurs shall be repaired in an approved manner.

7.2.3 Fuel Oil Storage Tanks: All tanks shall be strength tested in accordance with good engineering practice before they are placed in service. All tanks and connections shall be tested for tightness. Before being covered, enclosed, or placed in use, underground tanks shall be tested for leaks using air. Test pressure shall be not less than 5 nor more than 7 pounds per square inch and held a minimum of (4) hours. No pressure drop, except due to temperature change, will be accepted. Allow for ambient temperature change in accordance with the relationship $PF + 14.7 = (P1 + 14.7)(T2 + 460)(T1 + 460)$, in which T and P represent Fahrenheit temperature and gauge pressure, respectively, numbers 1 and 2 denote initial and final readings, and PF is the calculated final pressure. If PF exceeds the measured final pressure, locate leaks with soapy solution repair all leaks and repeat test until no reduction in pressure occurs. Use a test gauge calibrated in one psi increments and readable to 1/2 psi in performing the tests.

---END---

connection having a screwed valve shall have a union. In long lines inside buildings, unions or flanges shall be placed not farther apart than 100 feet, except in pipe lines of welded construction. Unions or flanges shall be as specifed.

6.6 Valves: Valves shall be installed in positions accessible for operation and repair. A check valve and a gate valve shall be installed on the suction line of each fuel oil storage tank.

6.7 Thermometers: Thermometers and thermal sensing elements of control valves, etc., shall be provided with a separable socket. Separable sockets installed in pipe lines shall be installed in such a manner to sense the flowing temperature of the fluid and minimize obstruction to flow.

6.8 Strainers: Strainers with meshes suitable for the services shall be provided where shown or where dirt might interfere with the proper operation of valve parts, orifices, or moving parts of equipment. Strainers shall be provided in the pump-suction lines and oil heater discharge lines.

6.9 Dielectric Unions or Flanges for Underground Pipe: Dielectric unions or flanges for underground pipe shall be installed between ferrous and non-ferrous piping, equipment, and fittings; except that bronze valves and fittings may be used without dielectric couplings for ferrous-to-ferrous or non-ferrous to non-ferrous connections. Dielectric fittings shall utilize a nonmetallic filler which will prevent current flow from exceeding one percent of the short circuit current. The filler shall be suitable for the pressure and temperature of the service.

6.10 Steel Fuel Oil Tank:

6.10.1 Underground Fuel Oil Tanks: The exterior of below ground tanks shall be cleaned to bare metal and coated with a coal tar enamel. Underground tanks shall be buried with a cover of earth not less than 2 feet deep, with all pipe connections at the top of the tank. Tanks shall rest on concrete pads or cradles conforming to the shape of the tank.

6.11 Fiberglass Reinforced Plastic Tanks shall be installed and back-filled as recommended by the manufacture.

7. FIELD INSPECTION AND TESTS:

7.1 Inspection: All materials and equipment shall be subject to inspection at the installation site by the Contracting Officer. Work rejected because of defects of nonconformance with plans and specifications shall be replaced or corrected by the Contractor as directed, at no additional cost to the Government.

7.2 Field Tests: The Contractor Quality Control representative will witness all field tests specified inthis section. The Contractor shall perform all field tests and shall provide the necessary facilities, labor, and

Installation of oil piping and equipment in buildings shall conform to NFPA National Board of Fire Underwriters pamphlet 31 "Installation of Oil Burning Equipment", except as indicated or specified herein. The feed line to equipment shall have an approved shut-off valve located near tank.

6.2 Pipe Sleeves: Pipe sleeves shall be provided and installed as defined in section entitled Supports and Sleeves.

6.3 Screwed Joints in Piping: For making up screwed joints, cylinder oil and graphite pipe-joint compound conforming to MIL-T-5544 shall be used, and shall be applied to the male threads only. The use of red or white lead and zinc compound conforming to MIL-T-22361 may be used. Threaded pipe joints, as well as bolts and studs used on high temperature pipe joints up to 1050 degrees F shall be lubricated with anti-seize compound in accordance with MIL-A-907. Piping shall be free from fins and burrs. Pipe ends shall be reamed or filed out to size of bore, and all chips shall be removed.

6.4 Welding:

6.4.1 Welding Procedure Specifications: Before any welding is performed, the Contractor shall submit to the Contracting Officer three copies of his welding procedure specification for all metals included in the work, together with proof of its qualifications as outlined in ANSI B31.1.

6.4.2 Performance Qualification Record: Before any welder or operator shall perform any welding the Contractor shall also submit to the Contracting Officer in conformance with ANSI B31.1 showing that the welder was tested under the approved procedure specification submitted by the Contractor. In addition the Contractor shall also submit each welder's assigned number, letter, or symbol which shall be used to identify the work of the welder which shall be affixed immediately upon completion of the weld. Welders making defective welds after passing a qualification test shall be given a requalification test and upon failing to pass the test shall not be permitted to work this contract.

6.4.3 Previous Qualifications: Welding procedures, welders, and welding operators previously qualified by test may be accepted for this contract without requalification subject to the approval of the Contracting Officer and provided that all the conditions specified in ANSI B31.1 are met before a procedure can be used.

6.4.4 Welding of Piping: Welding of joints in piping, butt welds, fillet welds, bends, loops, offsets, and cleaning of pipe shall conform to ANSI B31.1.

6.4.5 Quality of Welds: Quality of welds, correction of defects, stress relieving and preheating shall be in accordance with ANSI B31.1.

6.5 Unions or Flanges: Unions or flanges shall be placed where necessary to permit easy disconnection of piping and apparatus. Each

3.5 Strainers: Strainers for fuel oil shall be of the single basket type, with inlet and outlet connections on the same horizontal center line. The body shall be of cast iron or fabricated steel. The baskets shall be of series 300 stainless steel, and be readily removable by removal of the body top; the perforations shall be small enough to prevent passage of any solids which might interfere with proper functioning of valves or burners. The open area of the basket shall be not less than 4 times the area of the inlet and outlet piping. With each filter, a spare basket shall be supplied.

3.6 Meters: Meters shall conform to MIL-M-18294.

3.7 Instruments shall be as follows:

3.7.1 Thermometers: Thermometers shall conform to GG-T-321 and shall be mercury type with wells and temperature range suitable for the use encountered.

4. FUEL OIL HEATING AND PUMPING EQUIPMENT:

4.1 Tank Heater: The heater shall be of the vertical type, installed through a manhole in the top of the tank. All pipe connections shall e welded to the manhole cover, and the entire assembly shall be removable as a unit. It shall be capable of heating the required oil capacity from 30 to 130 degrees F, when supplied with steam at 15 PSI. It shall have all necessary connections for heating medium, inlet and outlet, drains, vent, thermometer and pressure gage. The heater coil shall be constructed of steel tubes and designed for 150 psig. The coil shall extend to within 6 inches of the tank bottom, and shall so surround the oil suction line as to insure the required oil temperature. Steam coil pressure drop shall not exceed 1 PSI.

4.2 Oil Pumps: Oil pumps shall conform to MIL-P-17608, and have flanged inlets and outlets. They shall be mounted on extended baseplates, with flexible couplings, and direct connected electric motors or V-belt drive. The discharge side of each pump shall be provided with a pressure relief valve, piped to the pump suction line; the suction side shall be provided with a duplex strainer.

5. FUEL OIL AND GASOLINE STORAGE TANKS AND ACCESSORIES:

5.1 Fuel Oil and Gasoline Storage Tanks: Fuel oil and gasoline tanks shall be constructed of steel or fiberglass reinforced plastic (FRP) and shall comply with NFPA Pamphlets 30 and 31. Steel tanks shall conform to MIL-T-426. FRP tanks shall conform to MIL-T-52777. Each fuel oil tank shall have a manhole on top, with extension neck, and bolted cover with gastight gasket. Openings and accessories shall be provided as shown on the drawings.

6. INSTALLATION:

6.1 General Installation Requirement for Oil Piping: All oil piping shall be free from traps and shall drain toward the tank or equipment

"3.8 Steam Tracing of Fuel Lines: Provide 1/2 inch tubing, Type L, ASTM B88, soft drawn, strapped to pipe every 5 feet with stainless steel banding material. Provide strainer and thermostatic trap at trace line's end. Groove insulation to fit over 1/2 inch trace lines."

(c) Meters (CO)
(d) Instruments (CO)
(e) Heating & Pumping Equipment (CO)
(f) Storage Tanks & Accessories (CO)

2.3.2 Certificates: Submit certificates from the manufacturer attesting that each of the following items conform to all requirements of this specification and of reference publications.

(a) Pipe and Fittings
(b) Meters and Instruments (CO)
(c) Heating and Pumping Equipment (including controls) (CO)
(d) Storage Tanks and Accessories (CO)

3. PIPING AND ACCESSORIES:

3.1 Aboveground and Below Ground Piping and Piping Accessories: Fuel oil and gasoline piping for above and below ground shall be Schedule 40 black steel pipe conforming to ASTM A120, or grade A Schedule 40 black steel piping conforming to ASTM A53. Fittings shall be steel in accordance with ANSI B16.9 and B16.28. Unions shall conform to WW-U-531 and shall be of the type required to be compatible to adjacent piping. Flanges shall conform to ANSI B16.5. Gaskets shall be suitable for the pressure and temperature range of 100 to 200 degrees F, gaskets shall be asbestos, monel, or soft steel. Underground light oil piping shall have a thermosetting epoxy coating conforming to Federal Specification L-C-530A, Type II.

3.2 Vent Piping: Vent piping shall be zinc-coated steel conforming to WW-P-406, standard weight, with zinc-coated malleable iron fittings conforming to WW-P-521.

3.3 Pipe Supports: Hangers, suports and anchors shall conform to WW-H-171. All piping shall be supported as defined on drawings and specified in Section entitled "Supports and Sleeves".

3.4 Valves:

3.4.1 Relief Valves: Relief valves shall be constructed with cast-iron or steel bodies and shall be equipped with corrosion-resistant valve seats. The valve shall be positive closing so that no leakage will occur.

3.4.2 Check Valves: Check valves shall conform to WW-V-51, lift check or swing check, 125 psi. All check valves shall be provided with renewable composition discs or shall have metallic disc or regrinding type.

3.4.3 Gate Valves: Gate valves 1-1/2 inches or less shall conform to WW-V-54, wedge disc, nonrising stem type, 125 pound class. Gate valves 2 inches and over shall conform to WW-V-58 200 psi class.

3.1 Aboveground and Below Ground Piping.....In the last sentence, immediately following "Underground" delete "light oil"; change "L-C-530A" to "L-C-530".

B16.28-1964	Wrought Steel Buttwelding Short Radius Elbows and Returns.
B31.1-1977	Power Piping.

1.4 American Society of Mechanical Engineers (ASME) Publications:

ASME Boiler and Pressure Code:

Section VIII - Pressure Vessels - 1977 (including all addenda thru Summer - 1978).

Section IX - Welding Qualifications - 1977 (including all addenda thru Summer - 1978)

1.5 American Society for Testing and Materials (ASTM) Publications:

A53-76	Welded and Seamless Steel Pipe.
A120-76	Black and Hot-Dipped Zinc-Coated (Galvanized) Welded and Seamless Steel Pipe.
A126-73	Gray Iron Castings for Valves, Flanges and Pipe Fittings.

1.6 National Fire Protection Association (NFPA) Publications:

NFPA No. 30 1977	Flammable and Combustible Liquid Code.
NFPA No. 31 1974	Installation of Oil Burning Equipment.

2. GENERAL:

2.1 Description: The work includes all fuel oil piping, fuel oil pumps, tank heater, fuel oil storage tank, and other auxiliary equipment.

2.2 General Requirements: General requirements include those specified in Section entitled, "General Requirements, Mechanical".

2.3 Submittals: Submittals required include; shop drawings, manufacturer's data and certificates for equipment, materials, finish, and pertinent details for each system and shall be submitted and approved before procurement, fabrication or delivery of suchitems to the job site. Partial submission will not be acceptable. Descriptive data shall be annotated to show the specific model, type and size of each item the Contractor proposes to furnish. The submittal requirements of section entitled "General Requirements, Mechanical", applies to the following lists. Items in the following lists which are followed by (CO) shall be approved by the Contracting Officer.

2.3.1 Manufacturer's Data:

(a) Valves
(b) Strainers (CO)

SECTION 15611. FUEL OIL HANDING SYSTEM

1. APPLICABLE PUBLICATIONS: The following publications of the issues listed below, but referred to thereafter by basic designation only, form a part of this specification to the extent indicated by the references thereto:

1.1 Federal Specifications:

GG-T-321C & Am 1	Thermometers, Self-Indicating, Liquid-in Glass, for Machinery and Piping Systems.
WW-H-171D	Hangers and Supports, Pipe.
WW-P-406 D & Int Am 1	Pipe, Steel, Seamless and Welded (For Ordinary Use).
WW-P-521F	Pipe Fittings, Flange Fittings and Flanges, Ferrous and Steel, (Screwed and Butt-Welded), 150 Pound.
WW-U-531E	Unions, Pipe, Steel or Malleable Iron, Threaded Connection.
WW-V-51F	Valve, Bronze; angle, Check, and Globe, 125-, 150-, and 200- Pound, Screwed, or Flanged for Solder (For Land Use).
WW-V-54D & Am 2	Valve, Gate, Bronze (125, 150, and 200 Pound, Screwed, Flanged, soldered, (For Land Use).
WW-V-58B	Valve, Gate, Cast Iron; 125 and 250 Pound, Screwed and Flanged (For Land Use).
L-C-530B & Am 1	Coating, Pipe, Thermoplastic Resin or Thermosetting Epoxy.

1.2 Military Specifications:

MIL-A-907D	Antiseize Compound, High Temperature.
MIL-F-18999C	Felt, Asbestos, Glass Fiber Reinforced, Pipe Line, Coal-Tar Saturated.
MIL-M-18294B	Meter, Fluid Quantity Volumetric.
MIL-P-15147C & Am 1 & Int Am 3	Primer and Enamel, Coal Tar.
MIL-P-17608B	Pump, Rotary, Power Driven, Viscous Liquid.
MIL-S-16293F	Strainer, Sediment, Pipeline, Water, Air, Gas, Oil or Steam.
MIL-T-426C	Tank, Liquid Storage, Metal: Fuel Oil, Horizontal.
MIL-T-5544B	Thread Compound, Antiseize, Graphite-Petrolatum.
MIL-T-22361 & Am 1	Thread Compound, Antiseize, Zinc Dust-Petrolatum.
MIL-T-52777	Tanks, Storage, Underground, Glass Fiber Reinforced Plastic.

1.3 American National Standard Institute (ANSI) Publications:

B16.5-1973	Steel Pipe Flanges and Flanged Fittings.
B16.9-1971	Factory-Made Wrought Steel Buttwelding Fittings.

meters installed under the contract. The Contractor shall be responsible for providing an analysis of the fuel being used for the tests. The tests shall include the following, and shall be performed when feasible, in the sequence as listed:

(a) Strength and Tightness tests.
(b) Standard compliance tests.
(c) Combustion tests.
(d) Operational tests.
(e) Capacity and efficiency tests.

---END---

7.2 Joint Sealing Material: Sealing material of the type recommended by the cast iron hot water boiler manufacturer shall be provided to seal all trim, flashing, closures, and elsewhere as necessary.

7.3 Trim: All trim and related closures and accessories in connection with the cast iron hot water boiler shall be provided as indicated and as necessary. Details of installation which are not indicated shall be in accordance with the manufacturer's printed instructions and details or the approved shop drawings. Installation shall allow for expansion and contraction.

8. FIELD REPAIR AND TOUCH-UP: Where cast iron hot water boiler or accessories have factory finish damaged, repair in accordance with manufacturer's touch-up system. Repaired surfaces not acceptable shall be replaced without expense to the Government.

9. FIELD TESTS AND INSPECTIONS:

9.1 General: The Contractor shall be responsible for the performance of all ihspections and tests as specified herein to demonstrate that the boilers and auxiliary equipment, as installed, are in compliance with contract requirements. During start-up or during the test, factory-trained engineers for technicians employed by individual suppliers of such components as the burner, flame safeguard and combustion controls, and other auxiliary equipment shall be present, as required, to insure the proper functioning, adjustment, and testing of the individual componetns and systems. A detailed written record of the start-up performance, including burner setting data over the entire load range, shall be furnished before the Contractor's and sub-contractor's test personnel leave the site. All labor, equipment, and test apparatus shall be furnished by the Contractor. The Government will furnish water, electricity, and fuel. All defects disclosed by these tests shall be rectified by the Contractor without additional cost to the Government within time period specified by the Contracting Officer. A certified boiler inspector from LANTDIV shall be present at all inspection and field tests.

9.2 Inspections: All inspections and tests at the site shall be made under the direction of and be subject to the approval of the Contracting Officer. The contractor shall operate each boiler and all appurtenances prior to final testing and shall insure that all necessary adjustments have been made. A 48 hour advanced written notice shall be submitted to the Contracting Officer indicating the equipment is ready for testing. All testing equipment, including guages, thermometers, calorimeter, Orsat apparatus, thermocouple pyrometers, fuel flow meters, water meters, and other test apparatus shall be provided by the Contractor and set up and calibrated prior to the test. Draft, fuel pressure, and steam flow may be measured by permanent gauges and

9.2 Inspections: Change "48 hour advance written notice" to "10 days advance written notice."

sections and the cleanout opening covers. The cleanout opening covers shall be readily removable for the purpose of cleaning the flueways between the boiler sections.

5.4 The boiler shall be furnished with a flexible refractory blanket which shall be affixed to the back of the firebox to provide a shield for the back section. The boiler shall be provided with an insulated heavy gage steel jacket with durable baked enamel finish. The jacket shall be insulated with heavy density fiberglass on the front, back, top and side panels. The jacket shall be designed to permit its installation after the connection of the supply and return piping.

6. CONSTRUCTION:

6.1 Burner Construction Features and Requirements:

6.1.1 The entire fuel burner system and its installation shall conform with the manufacturer's erecting instructions, with applicable codes and with the requirements of the National Board of Fire Underwriters. The burner motor electrical characteristics shall be 120/60/1. The burner fuel shall be No. 2 fuel oil. All equipment and materials shall be installed in an approved and workmanlike manner and in accordance with the following specifications.

6.1.2 The light oil burner shall be UL certified and shall be of a design which produces flame retention with rapid intimate mixing of the fuel and combustion air. The burner shall be designed to insure high efficiency and good performance under natural draft venting conditions. The burner shall be capable of being adjusted to provide 12 to 12-1/2 percent CO_2 with a trace to a No. 1 smoke for oil firing.

6.1.3 The light oil burner shall be arranged for on-off operation with one-position air control. The oil burner shall be furnished with a cadmium sulfide flame detector and burner primary control to monitor the main burner flame.

7. INSTALLATION: All materials shall be installed in strict accordance with the manufacturer's printed erection instructions, and the approved shop drawings. Care shall be exercised in storing, handling, and installation to prevent any damage to the panels. Panels shall be in full and firm contact with the supports. Extreme care shall be exercised in drilling pilot holes for fastenings to keep drills perpendicular. After drilling, all metal filings and burrs shall be removed from holes prior to installing fasteners and washers. Size and spacing of fasteners used in erection shall be as recommended by the manufacturer and shall be designed to withstand the design loads specified.

7.1 General: Examine alignment of structural steel before erecting cast iron hot water boilers. Erection shall be by the manufacturer's own erection division or a previously approved and licensed installer.

4.11 Boiler Stack: The boiler shall be provided with a round steel smoke stack having a diameter of not less than that specified by the boiler manufacturer. The boiler stack shall be constructed from No. 14 B & S gage black steel plate and shall have welded seams. The boiler stack shall be adequately supported from hangers and supports.

4.11.1 Finish coating on all building exterior metal, hardware, flashing, trim, and accessories shall be a polyvinylidene flouride (PVF_2) coating based on fluorocarbon resins. The percent of fluorocarbon resin shall be not less than 70 percent. After pretreatment of metal substrate as prescribed by coating manufacturer, apply by roll-coating or spray-coating one coat of zinc-chromate epoxy primer yielding approximately 0.2 mil dry film thickness. Oven bake primer in accordance with manufacturer's directions. Following application of prime coat, apply by roll-coating or spray-coating one coat of polyvinylidene fluoride to yield a minimum of 0.8 mil dry film thickness. Cure finish coat in oven at approximately 600 degrees F. Finish color shall be low gloss redwood. Coat unexposed surfaces of trim with manufacturer's standard epoxy primer. Color and finish should match preformed roofing and fascia panels specified under SECTION: PREFORMED METAL ROOFING AND FASCIA.

5. FABRICATION:

5.1 The boiler sections shall be factory assembled with the plate work mounted and the unit shall be shipped to the job location with the burner and jacket packaged separately. The boiler sections shall be held together with short individual draw rods and asbestos rope shall be employed to provide a permanent gas-tight seal between the boiler sections; each individual section and the complete section assembly shall be hydrostatically pressure tested before shipment in accordance with Section IV of the ASME Boiler and Pressure Vessel Code. Lifting hooks shall be cast on the sides of the front and back sections and steel skids shall be secured to the bottom at each side of the section assembly to facilitate lifting and positioning the boiler.

5.2 The boiler sections shall be assembled with individual draw rods that distribute tension evenly on all boiler sections. The boiler sections will not be face-ground in order that the corrosion protective outer skin will remain intact. The boiler sections shall be provided with accommodating sealing grooves and asbestos rope shall be employed to assure a permanent gas-tight seal between the sections. The asbestos rope shall be compressible and shall be impervious to heat and moisture. The boiler shall be provided with a flexible elastomer sealing ring for each port opening to assure a permanent water-tight seal between the boiler sections. Each section shall be provided with aligning lugs to assure positive alignment with adjoining section.

5.3 The boiler shall be furnished with heavy gage steel cleanout opening covers for the cleanout openings at the top of the boiler. Asbestos rope shall be employed to insure a permanent gas-tight seal between the boiler

4.2 The boiler sections shall be of the Hydro-Wall design to provide a completely water-backed combustion area with water circulated around the entire firebox.

4.3 The boiler sections shall be provided with integral, cast-on legs to maintain ample space between the bottom of the boiler sections and the boiler foundation for natural aeration.

4.4 The boiler shall be furnished with a refractory insulated burner mounting plate which shall be provided with the necessary holes and tappings to mount the burner. Asbestos rope shall be employed to provide a permanent gas-tight seal between the front section and the burner mounting plate.

4.5 The boiler shall be furnished with an observation port which shall be mounted on the front section to permit visual inspection of the burner flame from the front.

4.6 Boiler Trim: All electrical safety boiler controls are to be of accepted quality manufacture, and shall have UL Certification.

4.7 The boiler shall be furnished with a high temperature limit control and the control shall be set according to the design requirements of the heating system (250 degrees F. maximum allowable boiler water temperature).

4.8 The boiler shall be furnished with a combination pressure-temperature-altitude gage to indicate boiler water temperature, system pressure, and feet of altitude; the combination gage shall be of rugged guarded type construction and the gage dial shall be clearly marked and easy to read. Also furnish a boiler stack thermometer conforming to GG-T-321C.

4.9 The boiler shall be furnished with an ASME certified pressure relief valve and the valve shall be set to relieve at the rated boiler ASME working pressure. The relief valve shall be of the side outlet discharge type. The relief valve outlet shall be piped to a floor drain or near to the floor; the relief valve discharge must not be piped to any area where freezing temperatures could occur.

4.10 The boiler shall be furnished with a UL certified low water fuel cut-off. The low water fuel cut-off shall have an ASME working pressure rating of at least the ASME working pressure of the boiler. The low water fuel cut-off shall be installed according to the manufacturer's instructions and must be located on the boiler so the burner will become de-energized should the boiler water level fall (for water boilers, 2 inches below the published water-line dimension for steam operation).

2.1.5 The boiler shall be designed to provide vertical to horizontal flue gas travel and a horizontal flueway shall be cast into each intermediate section and back section to serve as an internal flue gas collector.

3. SUBMITTALS REQUIRED: Shop drawings, manufacturer's data and certificates for equipment, materials, finish and pertinent details for each system shall be submitted and approved before procurement, fabrication or delivery of such items to the job site. Partial submission will not be acceptable. Descriptive data shall be annotated to show the specific model, type and size of each item the Contractor proposes to furnish. The submittal requirements of section entitled "General Requirements, Mechanical", applies to the following lists. Items in the following lists which are followed by (CO) shall be approved by the Contracting Officer.

3.1 Manufacturer's Data:

(a) Boiler Unit (CO).
(b) Burner Unit (CO).
(c) Controls and Accessories (CO).

3.2 Certificates: Submit certificates from the manufacturer attesting that each of the following items conform to all requirements of this specification and of reference publication.

(a) ASME Boiler Construction Certification (CO).
(b) Burner UL Certification (CO).
(c) Controls and Accessories (CO).

3.3 Shop Drawings: Shop drawings shall be submitted to and approved by the Contracting Officer before work is started. Shop drawings shall show size; location, gage, shape, and method of construction and installation; other details as layout of cast iron hot water boiler; and other pertinent accessories, fasteners and details. Design calculations and complete erection instructions shall be submitted. The shop drawings and data shall be complete in one submittal.

3.4 Manufacturer's Catalog Data or Other Descriptive Data: Manufacturer's catalog data or other descriptive data of cast iron hot water boiler, including factory protective coatings, related hardware and accessories, fabrication and installation, and fasteners.

4. MATERIALS:

4.1 Provide for the furnishing and installation of a heating unit designed for use with flame retention type oil burner capable of burning No. 2 light fuel oils. The boiler will be of a low pressure, cast-iron, sectional type capable of developing full Institute of Boiler and Radiator Manufacturer's gross output capacity at 100 percent firing rate.

SECTION 15601. CAST IRON HOT WATER BOILER

1. APPLICABLE PUBLICATIONS: The following publications of the issues listed below, but referred to thereafter by basic designation only, form a part of this specification to the extent indicated by references thereto:

1.1 Federal Specifications:

GG-T-321C & AM 1	Thermometers, Self-indicating, Liquid-in Glass for Machinery and Piping System.

1.2 Military Specifications:

MIL-B-18897D & Am 1	Boiler, Heating, Low Pressure.

1.3 American Society of Mechanical Engineers (ASME): Change "1974" to "1977".

1974	Boiler and Pressure Vessel Code, Section IV.

2. QUALITY CONTROL: Unless otherwise specified herein requirements for supervision, inspection, sampling, testing, approval, directing, authorizing and other requirements of similar importance shall be the responsibility of the Contractor Quality Control representative. Approvals, except those required for field installations, field applications, and field tests, shall be obtained before custom fabrication is started and before delivery of materials or equipment to the project site.

2.1 Water Boiler:

2.1.1 Boiler should be cast iron package type of standard duty conforming to MIL-B-18897D(1) and shall have a gross output capacity of at least 480,000 BTU/HR. The boiler shall be constructed in accordance with the provisions of Section IV of the ASME Boiler and Pressure Vessel Code, and shall be stamped with the required official ASME symbol.

2.1.2 The water boiler maximum working pressure will be 30 PSIG.

2.1.3 The water boiler shall be constructed to provide balanced water flow through the entire section assembly so that single supply and return connections can be employed; external headers will not be necessary.

2.1.4 The boiler shall be designed to assure efficient and rapid heat transfer from the combustion gases to the boiler water. The firebox design shall insure maximum radiant heat transfer from the burner flame and the boiler sections shall be provided with cast-on heat absorbing studs for an enlarged prime heating surface.

17. FIELD TESTING to determine conformance with the specified requirements shall be performed in the presence of the Contractor Quality Control representative. Upon completion and before final acceptance of the work, each system shall be tested to demonstrate conformance with the contract requirements. Pumps, drivers, controllers and associated equipment shall be tested in accordance with NFPA 20. When tests have been completed and all connections made, the Contractor shall submit to the Contracting Officer a signed and dated request for a formal inspection by the Contracting Officer. The Atlantic Division, Naval Facilities Engineering Command, Fire Protection Engineer shall be notified by the Resident Officer in Charge of Construction and shall witness all tests and approve all systems before they are accepted. The request for formal inspection shall be submitted at least five working days prior to the date the inspection is to take place. A competent representative of the fire pump installer shall be present during the inspection. At this inspection, any or all of the required tests shall be repeated as directed by the Contracting Officer. All defects shall be corrected by the Contractor at his own expense and additional tests made until it has been demonstrated that the systems comply with all contract documents. All appliances and equipment for testing shall be furnished by the Contractor and all expenses, in connection with the tests, shall be defrayed by him. Water for testing will be furnished by the Government.

---END---

11. PIPE HANGERS AND SUPPORTS shall conform to NFPA 13. The finish of pipe hangers and supports shall be zinc or cadmium plated.

12. PIPE SLEEVES shall conform to Section entitled Supports and Sleeves.

13. ESCUTCHEON PLATES: Piping passing through floors, walls and ceilings shall be provided with approved type, one piece or split type plates. Plates where pipe passes through finished ceiling shall be chromium plated. Other plates shall be of steel or cast iron, with aluminum finish. Plates shall be securely anchored in place with set screws or other approved positive means.

14. INSTRUCTING OPERATING PERSONNEL: Upon completion of the work, and at a time designated by the Contracting Officer, the services of a competent engineer shall be provided for a period of not less than one 8-hour working day for the instruction of Government operating personnel in the proper operation and maintenance of the equipment.

15. PAINTING:

15.1 Painting of Equipment: Exterior surfaces of equipment shall be provided with, as a minimum, one coat of primer and two coats of paint; except that surfaces subject to temperatures above 120 degrees F. shall be provided with, as a minimum, two coats of heat resisting paint applied directly on bare, clean metal. It is desirable that all coats be shop applied; however, if the manufacturer's standard shop painting system does not meet these requirements, field applied coats shall be provided. Shop coats shall be lightly sanded before application of field applied coats. Field applied paint shall be applied to a dry film thickness of not less than one mil for each coat; paint shall conform to TT-E-489, except heat resisting paint shall conform to TT-E-496, Type II for surface temperatures between 120 and 400 degrees Fahrenheit, and to TT-P-28 for surface temperatures greater than 400 degrees F. Equipment painting, both shop and field, shall be provided under this section.

15.2 Field Painting is specified in Section entitled "Field Painting".

16. ELECTRICAL WORK: Electrical work is provided in Section entitled "Interior Electrical Systems," except for control wiring. Control wiring shall be provided under this section in accordance with NFPA 70.

16.1 Motors and Controllers: Motors and controllers shall be furnished with their respective pieces of equipment; and shall conform to and shall have all electrical connections provided under Section entitled, "Interior Electrical Systems". The cost of providing additional electrical service and related work shall be included under this section when motors and equipment furnished are larger than sizes indicated.

8.5 Engine Exhaust System (external to engine):

8.5.1 Exhaust Piping: Piping shall conform to ASTM A53 or A120, extra strong, black steel. Piping 2 inches and smaller shall have threaded or welding fittings. Piping 2.5 inches and larger shall have welding fittings.

(a) Threaded fittings shall conform to ANSI B16.11, or ANSI B16.3, Class 300.

(b) Welding fittings shall conform to ANSI B16.11, or B16.9 of the same material and weight as the piping in which they are installed.

(c) Welding shall be metallic arc process in accordance with ANSI B31.1, including qualification of welders. Certifications of each welder's qualifications shall be submitted to the Contracting Officer.

(d) Flanges shall conform to ANSI B16.5, Class 150. Flanges shall be provided for final connections to diesel engines, exhaust mufflers and flexible connections. Gaskets shall be 1/16 inch thick asbestos packing conforming to HH-P-46.

8.5.2 Engine exhaust mufflers (silencers) shall have flanged connections and shall be provided in accordance with the engine manufacturer's recommendations for residental class silencing.

8.5.3 Insulation: Exhaust piping shall be insulated inside the building with calcium silicate insulation conforming to HH-I-523, Type II, Class A, 2-inches thick. Insulation shall be protected by a 0.016 inch thick aluminum jacket with a factory applied moisture barrier and secured by aluminum straps or screws spaced 8 inches on centers.

9. ALARMS: Provide alarms for fire pumps in accordance with NFPA 20. Wiring is specified in section entitled "Manual and Automatic Fire Alarm Systems".

10. PIPING: Piping shall be in accordance with section entitled "Sprinkler System - Wet Pipe".

10.1 Hose Valves: Each test heater outlet shall have approved bronze hose valve with 2.5 inch National Standard male hose threads with cap and chain, conforming to NFPA 20, and ball drip valve.

10.2 Relief Valve: Each fire pump shall be provided with an approved relief valve conforming to NFPA 20.

10.3 Disinfection: Water piping shall be disinfected in accordance with AWWA C601. Piping system shall be filled with solution containing minimum of 50 parts per million of available chlorine and allowed to stand for minimum period of 24 hours. Solution shall be flushed from system with clean water until maximum residual chlorine content is not greater than 0.2 parts per million.

7.2 Controllers shall be sized for each motor being served, and mounted not less than 12 inches above the floor. Controller shall be automatic starting, and manual push button shut down.

8. DIESEL ENGINE DRIVER:

8.1 Diesel Engine shall be specially listed or approved for fire pump service, and shall be of the make and horsepower rating recommended by the pump manufacturer for the pump being provided. Engine horsepower shall be adequate to drive the pump at all conditions of speed and load over the full range of the pump performance curve. Diesel engine shall be of the compression ignition type with electric starting device taking current from two lead-acid battery units mounted not less than 12 inches above the floor.

8.2 Controller shall be mounted not less than 12 inches above the floor. Controller shall be automatic starting, and manual push button shut down.

8.3 Battery Charger shall be an integral part of the controller, or a separate wall mounted unit. Provide voltmeter to indicate the state of the battery charger.

8.4 Fuel System (external to the engine) shall conform to NFPA 20 and 31. All components shall be UL listed or FM approved.

8.4.1 Fuel Tank shall have a capacity of 75 gallons and conform to UL 142. Tank shall be provided with direct reading fuel level gage, and low fuel level alarm switch.

8.4.2 Fuel Piping: Vent piping shall be provided with weatherproof vent cap. Flexible bronze or stainless steel piping connectors with single braid shall be provided for each piping connectiton to engine and shall be suitable for fuel oil service. Vent and fill piping shall be steel piping. Supply and return piping shall be steel piping or copper piping.

(a) Steel Piping: Pipe shall conform to ASTM A53 or A120, standard weight, black steel, threaded. Fittings shall conform to ANSI B16.3 or B16.11, threaded.

(b) Copper Piping: Pipe shall conform to ASTM B88, Type K, soft annealed. Fittings shall be flared fittings conforming to ANSI B16.26.

8.4.3 Valves shall be suitable for fuel oil service.

(a) Gate Valves shall conform to WW-V-54, Type III, Class A.

(b) Check Valves shall conform to WW-V-51, Type IV, Class A.

3.2 Instruction Manuals: Contractor shall furnish instruction manuals, containing complete instructions for the specific make and model of each pump, driver, controller, and associated equipment furnished. One copy of each instruction manual shall be placed in a flexible oil resistance protective binder and mounted in an accesible location in the pump house. Three additional copies of instruction manual shall be furnished to Contracting Officer.

4. FIRE PUMPS: Each pump assembly including associated equipment and appurtenances shall conform to NFPA 20, and shall be listed for fire protection service by Underwriters' Laboratories, Inc., or approved by the Factory Mutual Laboratories. Each pump shall furnish not less than 150 percent of rated capacity at not less than 65 percent of total rated head. Pumps shall be of the centrifugal horizontal split case type; shut off head shall not exceed 120 percent of rated head. Each pump shall be rated at 500 GPM at total discharge head of 85 psig.

5. SEQUENCE OF OPERATION:

5.1 The diesel driven pump shall be set to automatically start at 100 psig measured in the fire pump room. If this pump should fail to start, or the demand exceeds the pump capacity, and the main pressure drops to 90 psig, the electric pump shall automatically start. Once either pump has started, it will continue to run until manually stopped.

6. PRESSURE MAINTENANCE PUMP shall be provided to maintain a pressure of 125 psig on the fire protection system. The pump shall be of the electrically driven, horizontal shaft, centrifugal type with a rated discharge of 25 GPM at 85 psig. Pump shut off pressure shall not exceed the designed working pressure of the fire protection system. Pump shall draft from the suction supply side of the suction pipe gate valve of the fire pump and shall discharge into the fire protection system on the downstream side of the fire pump discharge gate valve. Approved indicating gate valves of the OS&Y type shall be provided in the maintenance pump suction and discharge piping. An approved check valve shall be provided in the maintenance pump discharge pipe and shall be located between the maintenance pump discharge outlet and the discharge gate valve. A pressure switch shall be provided in the fire protection system supply main, near the point where it leaves the pump room which shall cause the maintenance pump to start when the pressure drops to 110 psi and to stop when the pressure reaches 125 psi.

7. ELECTRIC MOTOR DRIVER including motor and controller shall be for across the line starting. Power supply to each motor and controller shall be as indicated.

7.1 Motors shall be continuous duty, squirrel cage induction type. Motor horsepower shall be not less than pump horsepower requirements at all points on the pump operating curve.

20-76 Centrifugal Fire Pumps.
31-78 Oil Burning Equipment.
70-78 National Electrical Code.

1.8 Underwriters' Laboratories, Inc. (UL):

142-72 Steel aboveground tanks for flammable and combustible liquids.

2. QUALIFICATIONS OF INSTALLER: Prior to installation, the Prime Contractor shall submit data for the approval of the Contracting Officer which will show that he has successfully installed fire pumps and associated equipment of the same type and design as specified herein, or that he has a firm contractual agreement with a subcontractor having such required experience. The data shall include the names and locations of at least two installations where the Contractor, or the subcontractor referred to above, has installed such systems. The Contractor shall indicate the type and design of these systems and certify that these systems have performed satisfactorily in the manner intended for a period of not less than 18 months.

3. GENERAL REQUIREMENTS: Section entitled, "General Requirement, Mechanical," with the following additions and modifications, applies.The work includes providing one diesel engine driven and one electric motor driven fire pump and related work. Each pump assembly including pump, driver, controller, associated equipment and appurtenances shall conform to NFPA 20, and shall be listed for fire protection service by Underwriters' Laboratories, Inc., or approved by the Factory Mutual Laboratories. Each system shall be complete and ready for operation. Equipment, materials, installation and workmanship shall be in accordance with NFPA 20 and 70, except as specified otherwise. Capacity of equipment shall be not less than that indicated. In the NFPA publications referred to herein, the advisory provisions shall be considered to be mandatory, as though the word "shall" had been substituted for "should" wherever it appears; reference to the "authority having jurisdiction" shall be interpreted to mean the Contracting Officer.

3.1 Submittals Required: Before any work is commenced, the Contractor shall submit complete sets of working drawings of each pump installation; and full descriptive data for pumps, drivers, controllers, pipe, fittings, gate valves, check valves, relief valves, gages, manufacturers certified pump discharge curves, complete circuit diagrams, interior wiring diagrams of controllers, hangers, devices, materials, and associated equipment to the Contracting Officer for approval. The Contracting Officer shall have the Atlantic Division, Naval Facilities Engineering Command, Fire Protection Engineer review and approve all submittals. Partial submission will not be acceptable. Descriptive data shall be annotated to show the specific model, type and size of each item the Contractor proposes to furnish. The drawings shall be in accordance with the requirements for "Complete Plans and Data" as specified in NFPA 20, and shall include all applicable data specified therein. No work shall begin until the design of the system and the various components have been approved by the Contracting Officer.

SECTION 15516. FIRE PUMPS

1. APPLICABLE PUBLICATIONS: The publications listed below, but referred to thereafter by basic designation only, form a part of this specification to the extent indicated by the references thereto (where a number is suffixed to the publication number, it denotes the effective amendment to the publication):

1.1 Federal Specifications:

HH-I-523C	Insulation blocks and pipe covering, thermal (calcium silicate).
HH-P-46E	Packing; asbestos, sheet, compressed.
TT-E-489F	Enamel, alkyd, gloss.
TT-E-496B(1)	Enamel, heat resisting (400 degrees F.), black.
TT-P-28E	Paint, aluminum, heat resisting (1000 degrees F.).
WW-H-171D	Hangers and supports, pipe.
WW-V-51F	Valves, bronze; angle, check and globe (125, 150 and 200 pound; threaded, flanged and solder).
WW-V-54D & Am 1	Valves, bronze, gate (125, 150 and 200 pound; threaded, flanged and solder).

1.2 American National Standards Institute (ANSI):

B16.1-75	Cast-iron pipe flanges and flanged fittings.
B16.3-71	Malleable-iron threaded fittings, 150 and 300 pounds.
B16.4-71	Cast-iron threaded fittings, 125 and 250 pounds.
B16.5-73	Steel pipe flanges, flanged valves and fittings.
B16.9-71	Factory made wrought steel butt welding fittings.
B16.11-73	Forged steel fittings, socket-welding and threaded.
B16.18-73	Cast-bronze solder-joint pressure fittings.
B16.22-73	Wrought copper and bronze solder-joint pressure fittings.
B16.26-75	Cast copper alloy fitttings for flared copper tubes.
B31.1-77	Code for pressure piping.

1.3 American Society for Testing and Materials (ASTM):

A53-76	Welded and seamless steel pipe.
A120-77	Black and hot dipped zinc-coated (galvanized) welded and seamless steel pipe.
B88-76	Seamless copper water tube.

1.4 American Water Works Association (AWWA):

C601-68	Disinfecting water mains.

1.5 National Fire Protection Association (NFPA):

13-76	Sprinkler Systems.

SECTION 15652. CENTRAL REFRIGERATION EQUIPMENT FOR AIR CONDITIONING

1. APPLICABLE PUBLICATIONS: The following publications of the issues listed below, but referred to hereafter by basic designation only, form a part of this specification to the extent indicated by the references thereto:

1.1 Federal Specifications:

FED-STD-141	Paint, Varnish, Lacquer, and Related Materials, Methods of Inspection, Sampling and Testing.

1.2 Military Specifications:

MIL-C-16278F	Cooling Tower, Liquid.
MIL-P-17552C & Am 1	Pumps Centrifugal, Water Horizontal General Service, and Pumps Centrifugal, Water Horizontal, Boiler Feed.
MIL-P-21035 & Am 1	Paint, High Zinc Dust Content, Galvanizing Repair.

1.3 Air Conditioning and Refrigeration Institute (ARI) Standards:

450-77	Standard for Water-Cooled Refrigerant Condensers.
460-70	Standard for Remote Mechanical-Draft Air-Cooled Refrigerant Condensers.
480-74	Standard for Refrigerant-Cooled Liquid Coolers, Remote Type.
495-68	Standard for Refrigerant Liquid Receivers.
520-74	Standard for Positive Displacement Refrigerant Compressor and Condensing Units.
550-77	Standard for Centrifugal Water-Chilling Packages.
590-76	Standard for Reciprocating Water-Chilling Packages.

1.4 American National Standards Institute (ANSI):

A10.2-1944	Safety Code for Building Construction.
A12.1-1973	Safety Requirements for Floor and Wall Opening, Railings and Tie Boards.
B9.1-1971	Safety Code for Mechanical Refrigeration.
15.1-1972	Safety Code for Mechanical Power Transmission Apparatus.

1.5 American Society of Heating, Refrigerating, and Air-Conditioning Engineers, Inc. (ASHRAE) Standards:

20-70	Methods of Testing for Rating Remote Mechanical-Draft Air-Cooled and Evaporative Condensers.

1.6 American Society of Mechanical Engineers (ASME) Code:

Section VIII	Pressure Vessels, Division 1 (1977).

1.7 American Society for Testing and Materials (ASTM), Specifications:

B209-77	Aluminum-Alloy Sheet and Plate, Specifications for.
B210-76	Aluminum-Alloy Drawn Seamless Tubes, Specifications for.

1.8 American Society of Mechanical Engineers Performance Test Codes (ASME):

PTC 23-1958	Atmospheric Water Cooling Equipment.

1.9 Cooling Tower Institute (CTI):

ATP-105	Acceptance Test Procedure for Industrial Water - Cooling Towers.

1.10 National Electric Manufacturer's Association (NEMA):

MG-1-1976	Motors and Generators.
ICS-1976	Industrial Control and System.

1.11 Underwriters' Laboratories (UL):

207(c) - 1973	Refrigerant-Containing Components.

2. GENERAL:

2.1 Materials and equipment shall meet the general basic requirements of section entitled "General Mechanical Requirements".

2.2 Piping shall conform to section entitled "Hot Water Heating and Chilled Water Cooling".

2.3 Vibration isolation shall conform to paragraph entitled "Packaged Centrifugal and Helical Rotary Screw Comperssors".

2.4 Temperature controls shall conform to section entitled "Temperature and Humidity Controls".

2.5 Insulation of equipment shall conform to section entitled "Insulation of Mechanical Systems".

2.6 Air and water balancing tests and adjustments shall conform to section entitled "Testing and Balancing Air and Water Systems".

2.7 Reliability: Proof shall be provided with shop drawings submittals to indicate that the manufacturer or fabricator has fabricated units of the approximate capacity specified which has seen two years satisfactory service prior to date of submittal, and that if the major components of the units are of a different type or manufacturer from those used to prove the above experience, proof must be provided that the major components of the same type

and manufacturer have operated satisfactorily in other comparable service. Items of equipment shall be supported by a service organization that is, in the opinion of the Contracting Officer reasonably convenient to the site.

2.7.1 Package water chillers and air-conditioning compressors having less than the 2 years service record specified above will be acceptable when a certified record of satisfactory field operation under normal operating conditions for not less than 6,000 hours can be shown. Types that have been shown to have operated satisfactorily for these periods may have modifications, provided it can be clearly shown that the modifications will not increase maintenance and operating costs and will not decrease the life of the machine. Modifications of the following descriptions will definitely require compliance with the full 2 year or 6,000 hour satisfactory experience requirement:

(1) Increase in rotative speeds in excess of 20 percent.

(2) Reduction in metal thickness in sections subject to high pressures or vaccum.

(3) Change of refrigerant.

(4) Change in lubricating system and bearings.

(5) Change in design and surface area of condensers and evaporators of the package water chiller.

2.8 Corrosion Prevention: Except as otherwise specified herein, equipment fabricated from ferrous metals shall be treated for prevention of rust by a factory coating or paint system that will withstand 125 hours in a salt-spray fog test except that equipment located outdoors shall be tested for 500 hours. The salt spray fog test shall be in accordance with method 6061 of Federal Standard 141 using a 20 percent sodium chloride solution. Immediately after completion of the test, the coating shall show no signs of blistering, wrinkling or cracking, no loss of adhesion, and the specimen shall show no signs of rust creepage beyond 1/8-inch on either side of the scratch mark. The film thickness of the factory coating or paint system applied on the equipment shall be not less than film thickness used on the test specimen.

2.9 Manufacturer's Supervision: The Contractor shall provide the services of competent factory representatives to supervise the installation, test, start-up, and adjustment of water chillers and cooling tower, and to instruct government personnel in the proper operation and maintenance of the equipment. Such services shall be provided for a minimum of 5 working days for chillers and 2 working days for cooling towers.

2.10 Safety Standards:

2.10.1 Design, manufacture and installation of mechanical refrigeration equipment shall meet the requirements of "Safety Code for Mechanical Refrigeration" ANSI B9.1.

2.10.1.1 Couplings, motor shafts, gears or other moving parts shall be fully guarded, in accordance with ANSI B15.1 "Safety Code for Mechanical Power-Transmission Apparatus." Guards shall be cast iron of expanded metal. Guard parts shall be rigidly and suitably secured and be readily removable without disassembling the guarded unit.

3. SUBMITTALS:

3.1 Submittals required include shop drawings manufacturer's, data and certificates for equipment, materials, finish and pertinent detail for each system and shall be submitted and approved before procurement, fabrication or delivery of such items to the job site. Partial submission will not be acceptable. Descriptive data shall be annotated to show the specific model, type and size of each item the Contractor proposes to furnish. The submittal requirements of section entitled "General Requirements Mechanical" applies to the following lists. Items in the following list which are followed by (CO) shall be approved by the Contracting Officer.

3.1.1 Manufacturer's data:

(a) Refrigeration Machines (CO)
(b) Cooling Tower (CO)
(c) Chilled Water Pumps (CO)
(d) Condenser Water Pumps (CO)
(e) Expansion Tanks (CO)
(f) Refrigeration Machine Accessories (CO)

3.1.2 Certificates: Submit certificates from the manufacturer attesting that each of the following items conforms to all requirements of this specification and of reference fabrication.

(a) Refrigeration Machines (CO)
(b) Cooling Tower (CO)
(c) Chilled Water Pumps (CO)
(d) Condenser Water Pumps (CO)
(e) Expansion Tanks (CO)
(f) Refrigeration Machine Accessories (CO)

4. Refrigerating Machine, General:

4.1 Materials used in construction of refrigerating machine shall be suitable for purpose intended and those coming in contact with refrigerant shall be highly resistant to corrosion by the refrigerant. Principal parts shall be standard products of a reputable refrigerating machine manufacturer. Minor accessories, piping, etc., not produced by manufacturer shall be in accordance with refrigerating machine manufacturer's standard practice and

specific recommendations. Equipment shall operate within standard operating range and speed recommended by manufacturer, and rating for a particular machine shall be not more than that shown in manufacturer's latest catalog information.

4.2 Each refrigerating machine and connected system shall be charged with refrigerant and lubricating oil. Contractor shall also furnish and deliver to the Contracting Officer one complete charge of lubricating oil in sealed containers in addition to that placed in system.

4.3 Parts weighing 50 pounds or over which must be removed for inspection, cleaning, or repair, such as motors, gear boxes, cylinder heads, casing tops, condenser and cooler heads, etc., shall be provided with lifting eyes or lugs.

5. PACKAGED CENTRIFUGAL AND HELICAL ROTARY SCREW WATER CHILLERS:

5.1 Unit shall be a complete water-chilling plant with liquid cooler, condenser, compressor, prime mover, oil heater and cooler, economizer or intercooler when required by manufacturer, operating and safety controls, including flow switch in chilled water line, purge or evacuation system when required by manufacturer, refrigerant piping, purge or evacuation piping when required by manufacturer, and all customary auxiliaries deemed necessary by manufacturer for safe, controlled automatic operation of equipment. Unit shall be opened or hermetically sealed type using one of the fluorocarbon gases as the refrigerant. Centrifugal unit shall conform to ARI Standard 550, and shall be provided with all the standard components and accessories listed therein. Capacity shall be based on the conditions indicated on the drawings and specified herein.

5.2 Compressors:

5.2.1 Centrifugal type compressor shall be single or multistage, having statically and dynamically balanced impeller, either direct or gear driven by prime mover. Impeller wheel shall be constructed of materials that have been in successful use for at least (2) two years. Impeller shaft shall be heat-treated alloy steel with sufficient rigidity for proper operation at any required operating speed. Shaft main bearings shall be either journal type with bronze or babbitted liners or aluminum-alloy one-piece insert type. Casing shall be cast iron, aluminum or steel plate with split sections gasketed and bolted or clamped together. Lubrication system shall be forced-feed type and shall provide oil at proper temperature to all parts requiring lubrication. Make provisions to insure proper lubrication of bearings and shaft seals prior to starting and on stopping with or without electric power supply. On units providing for forced-feed lubrication prior to starting, a differential oil pressure cutout interlocked with the compressor starting equipment shall allow compressor to operate only when requried oil pressure is provided to bearings. Compressor shall be provided with temperature or pressure-actuated capacity reduction of prerotation vane or suction-damper type to provide automatic capacity modulation from

100-percent capacity to 10-percent capacity. Hot-gas bypass automatically controlled shall be provided if required to maintain stable operation.

5.2.2 Helical rotary screw compressor shall be positive displacement, oil injected type directly driven by the prime mover. Compressor rotors shall be of material that has been in successful use for a period of at least (2) two years. Rotors shall be solid steel forging, SAE, 1035, with sufficient rigidity for proper operation at a maximum operating speed of 3,600 r.p.m. Shaft main bearing shall be of sleeve design, conservatively loaded, with heavy duty, steel-backed babbitt bushings. Casing shall be cast iron, precision machined for minimal clearance about periphery of rotors. Lubrication system shall be forced-feed type. Make provisions to insure proper lubricating of bearings and shaft seals on shutdown with or without electric power supply. Provide units with a differential oil pressure cutout interlocked with compressor starting equipment to allow compressor to operate only when required oil pressure is provided to bearings. Provide compressor with a temperature or pressure initiated, hydraulically actuated, single-slide-valve capacity-control system to provide automatic capacity modulation from 100 percent to 10 percent. Compressor shall operate stably and for indefinite time periods at any stage of capacity reduction without recourse to hot-gas bypass.

5.3 Condenser shall be shell-and-tube construction, permitting tubes to be cleaned from each end by removing water box cover plates or head and minimum amount of water piping. Condenser shall be tested and proved tight at 225 p.s.i.g. Tubes, tube sheets, and tube-support plates shall be constructed and tested in accordance with Section VIII of the ASME Boiler and Pressure Vessel Code where applicable for working pressures produced by refrigerant used and water system installed, but not less than 150 p.s.i.g. waterside working pressure. Tubes shall be fabricated of seamless copper tubing with integral fins and shall be individually replaceable and rolled or brazed into copper or steel tube sheets. Performance shall be based on a water velocity not less than 3 f.p.s. nor more than 10 f.p.s. and a fouling factor of 0.001. Refrigerant side of shell shall be tested and made tight at 1-1/2 times refrigerant saturation pressure at 85 degrees F.

5.4 Liquid cooler shall be designed, fitted and rated in conformance with ARI Standard 550. It shall be constructed and tested in accordance with Section VIII of ASME Boiler and Pressure Vessel Code where applicable for working pressures produced by refrigerant used and water system installed, but not less than 150 p.s.i.g. waterside working pressure. Liquid coolers shall be removable copper tube bundle type constructed of seamless copper tubing plain or with integral fins, individually replaceable and rolled or brazed into copper or steel tube sheets with tube supports of copper or steel plate. Liquid cooler feed control shall be complete and designed to properly feed liquid cooler at all levels of capacity from 100 percent down to minimum required operating level. Performance shall be based on a water velocity not less than 3 f.p.s. nor more than 10 f.p.s., and fouling factor of 0.0005.

5.5 Economizer for Centrifugal Units: When required by manufacturer, shall be provided. Flash gas shall be piped from economizer to inlet of intermediate-stage impeller wheel. Necessary flow control to automatically regulate flow of liquid refrigerant through economizer shall be provided. If external-type economizer is used, such economizer shall be constructed and tested in accordance with ANSI B9.1.

5.6 Purge System for Centrifugal Units: When type R-11 or type R-113 refrigerant is used, a purge system shall be provided and connected to main refrigeration system. When in operation, purge system shall function to automatically remove air, water vapor, and noncondensable gases from refrigeration system, and to condense, separate, and return to system any refrigerant present therein. Purge system shall be manually or automatically started and stopped and shall be assembled as a compact unit. Purge system shall be complete with all necessary operating and safety devices and with an oil separator if required by manufacturer. When a positive pressure refrigerant is used by manufacturer in basic chiller unit, a purge system shall not be required.

5.7 Evacuation or Pump-out System for Centrifugal Units: When design of basic chiller unit of manufacturer requires use of a positive pressure refrigerant and is of design to permit pumpdown of entire refrigerant charge and isolation of entire refrigerant charge in condenser; then a separate evacaution or pump-out system shall not be required. When a positive pressure refrigerant is used and basic chiller unit will not permit pumpdown storage and isolation of entire charge in the condenser, then a manually started and stopped evacuation or pump-out system shall be provided, consisting of motor-driven, air-or water-cooled, reciprocating, condensing unit and a receiver of sufficient capacity to store entire refrigerant charge of largest water-chilling system or unit. Evacuation or pump-out system condensing unit shall be assembled as a complete unit. Receiver shall conform to requirements of ANSI B9.1. Entire system shall be complete with all valves, piping and controls so that the evacuation or pump-out system may be provided without requiring any temporary piping or wiring.

5.8 Controls, Control Panel, and Gages: Water-chiller unit shall be provided with operating and safety controls of the electric, electronic, or pneumatic type as specified in section entitled "Temperature Controls". Water-chiller unit shall be provided with a control panel on which shall be mounted compressor operating control, start-stop switch and the following gages and protective devices:

5.8.1 Gages:

Suction-pressure gage

Condenser-pressure gage

Oil-pressure gage.

5.8.2 Protection devices with manual reset:

Low-refrigerant-temperature cutout

High-pressure cutout

Low-oil-pressure cutout

Low-water-temperature cutout.

5.8.3 Signal lights shall be provided for above protective devices. Alarm circuit terminal shall be provided in basic chiller unit control panel to actuate a 4-inch diameter alarm bell in event of machine cut-out on any protective device. Provide transformer for bell circuit.

5.8.4 Operating Control: Chilled-water control shall be modulating type and have adjustable throttling range, a means of calibration, and a means of adjusting chiller-water temperature control point.

5.9 Prime Mover:

5.9.1 Electric motor shall be constant-speed, squirrel-cage induction open-enclosure or refrigerant cooled type. Compressor electric motor speeds shall not exceed 3,600 r.p.m. and shall be suitable for the electrical characterisitcs shown on the drawings. Motor starter shall be magnetic wye delta closed transition type with general-purpose enclosure, sized in accordance with the chiller manufacturer's written recommendations. designed for floor mounting. The starter shall incorporate all the automatic starting features as recommended by the machine manufacturer for automatic starting. These features shall include the cycling of the condenser water pump and the cooling tower fan with the compressor auxiliaries, but will not include the cycling of the chilled water pump.

5.9.2 Additional Requirements: Provide each controller with the following:

(1) Front access to all internally mounted components. Synchronous motor driven sequencing timer on reduced-inrush type controllers.

(2) Integral sized magnetic contactors as listed in NEMA ICS2-211.23 with proper derating factor applied.

(3) Line and load terminal lugs of the size and number required to accommodate cable shown on the Drawings.

(4) A shielded ammeter, with phase transfer switch, mounted in front door.

(5) One (1) Westinghouse "MG-6" or General Electric "HGA" relay with dust-tight case, semi-flush mounted in the enclosure front door. Wire

relay so that under normal running conditions its coil is energized through the chiller safety shut-down circuit and coil de-energization will stop the chiller.

(6) One (1) starting interval timer to prevent starting of machine at intervals of less than pre-set time. Mount in front door or in machine control console, at option of machine manufacturer.

(7) One (1) control power transformer, 3 KVA, 1 phase, 120 volt secondary with "X2" grounded. This transformer provides control power for machine controller, oil pump controller, cooling tower fan controller, condenser water pump controller, chilled water pump controller and all refrigeration cycle safety and operating controls.

(8) Three (3) magnetic overload relays, open type, hand reset, mounted within the controller enclosure in an easily accessible position.

(9) One (1) ground fault protection system consisting of totodial sensor, solid-state relay with adjustable time-delay and pick-up current, and test panel mounted in front of controller enclosure door. Provide torodial sensor with a properly sized core window to accommodate all motor leads.

(10) Internal power interconnections of copper strap or insulated copper cable. Provide cable having 90 C insulation with conductor sized for 145 percent of chiller full-load current in 50 C ambient.

(11) Complete set of internal controlwiring connected to terminal blocks arranged and marked as required by the machine manufacturer.

(12) Fusible disconnect switch with size and ratings compatible with machine motor.

(13) Enclosures: NEMA 1.

(14) The chiller manufacturer shall provide the compressor oil pump motor starter. The starter shall be mounted in the compressor motor controller enclosure.

5.9.3 Speed reducing gears driving centrifugal machines shall be so designed as to assure self-alinement, interchangeable parts, proper lubrication and minimum of unbalanced forces. Bearings shall be sleeve type. Pressure lubrication with pump and cooler shall be provided. Gear cases shall be oiltight. Shaft extensions shall be provided with seals to retain oil and exclude all dust.

5.10 Entire water-chilling unit shall be factory mounted on a welded steel base, and shall be provided with required isolation pads.

6. COOLING TOWERS, MECHANICAL DRAFT:

6.1 General: Cooling tower shall conform to MIL-C-16278 and as specified herein. Tower shall be forced draft type, field erected. Towers shall be designed to withstand the dead loads and wind loads specified in MIL-C-16278 plus 15 percent increase loading for ice and snow. Vibration cut-out switch shall be provided.

6.2 Materials:

6.2.1 Wood used for tower shall be redwood, treated douglas fir, or treated hemlock.

6.2.2 Steel shall be Special zinc-coating hot dipped galvanized after fabrication in accordance with MIL-C-16278.

6.3 Construction:

6.3.1 Casing shall be corrugated or flat asbestos cement board single wall.

6.3.2 Basin shall be concrete basin.

6.3.3 Louvers shall be corrugated or flat asbestos board.

6.3.4 Tower frames shall be of zinc-coated steel.

6.4 Treatment and Painting:

6.4.1 Tower surfaces shall be treated and painted in accordance with MIL-C-16278.

6.5 Structural supports and foundations shall be provided as necessary to support tower in accordance with recommendations of manufacturer of tower proposed for project unless otherwise noted on drawings. Foundation design shall be based on load conditions and soil bearing value shown on drawings. Foundation calculations shall be submitted with equipment drawings for approval by the Contracting Officer.

6.6 Safety Requirements: Provide fan guards, ladder and railings in conformity with the ANSI Standards A12 and A10.2 and as follows:

6.6.1 Protect discharge fans by a ruggedly framed screen having 2-inch mesh of 0.10 galvanized steel wire installed outside fan and removable for service.

6.6.2 Ladders: One vertical hot-dip-galvanized-steel ladder shall be provided for each tower. Ladders higher than 12 ft. shall have safety cage.

6.6.3 Hand Railings: Provide steel hand railings not less than 36 inches high around exterior of each fan-deck or working-surface 12 or more feet above ground, roof of other supporting construction. Railing shall be

not smaller than 1-1/4 inch IPS galvanized steel pipe with standard galvanized steel railing type fittings.

7. PUMPS:

7.1 Chilled water pumps shall conform to section entitled "Hot Water Heating and Chilled Water Cooling Systems".

7.2 Condenser water pumps shall be vertical turbine type. Motor and pump head shall be unit drive construction. Thrust bearing shall have ample capacity to carry weight of all rotating parts plus hydraulic thrust of pump impellers, and have an ample safety factor. This factor shall be based on an average life expectancy of five years operation at 24 hours per day.

7.2.1 Motor shall be vertical hollow shaft, squirrel cage induction type and shall be splashproof. Motor shall drive pump continuouosly under total head specified with a temperature rise of not more than 40 degrees C, above ambient temperature. It shall be furnished with non-reverse ratchet. Discharge head shall be high-tensile, close grained cast iron, hollow shaft type arranged for surface discharge. A base of high grade cast iron shall be furnished for grouting to the concrete foundation and which will allow the removal of the pump from the concrete foundation without removing the cast iron base.

7.2.2 Discharge column shall be furnished in interchangeable sections not over ten feet in length, and shall be connected with threaded, sleeve type couplings. Joints are to be butted to insure perfect alignment after assembly.

7.2.3 Line shafting shall be turned, ground and polished precision shafting of ample size to operate pump without distortion or vibration. Shaft shall be furnished in interchangeable sections not over ten feet in length and shall be coupled with strong steel couplings machined from solid bar steel. A non-corrosive journal shall be placed on each shaft at bearing point. This non-corrosive journal shall consist of a sleeve swaged into a shaft recess with the O.D. substantially flush with shaft O.D. Column assembly shall have bronze guides fitted into the pipe coupling and retained by the butted pipe ends. Each guide shall contain a water lubricated, cutless rubber bearing designed for vertical turbine pump service.

7.2.4 Pump bowls shall be close grained cast iron having a minimum tensible strength of 30,000 pounds per square inch, free from blow holes, sand holes, and all other faults; accurately machined and fitted to close dimensions.

7.2.5 Impeller shaft shall be stainless steel of not less than 12% chrome. No so-called rustless iron will be considered. Impeller shaft shall be supported by a combination of water lubricated, fluted rubber and bronze bearings.

7.2.6 Impeller shall be bronze, accurately machined and finished, and mechanically balanced and shall be securely fastened to impeller shaft with a tapered bushing. Each bowl shall have an impeller seal ring to prevent slippage of water between bowl and impeller. Impellers shall be adjustable by means of a nut in pump head.

7.2.7 A galvanized strainer having a net inlet opening area of not less than four times area of suction pipe shall be provided.

8. EXPANSION TANK CLOSED SYSTEM: Expansion tank shall conform to section entitled "Hot Water Heating and Chilled Water Cooling Systems".

9. CONDENSER WATER PIPING: Pipes 4 inches and larger shall be standard weight black steel, with welding fittings, or fittings shall be flanged with welding necks. Underground galvanized and black steel condenser water pipe and fittings installed shall have a thermosetting epoxy coating conforming to Federal Specification L-C-530B, Type II. Piping shall be installed generally meeting the requirements of section entitled "Hot Water Heating and Chilled Water Cooling Systems" for welded, standard weight black steel. Pipe 3 inches and smaller shall be galvanized standard steel with screwed fittings or seamless copper tubing. Hard drawn, Type K where buried, and Type L for all other, with cast brass or wrought copper solder joint type fittings.

10. CHILLED WATER STORAGE TANKS: Storage tanks shall conform to MIL-T-12295 Type II or IV, Class 1 Style A.

11. CLEANING, PAINTING, AND IDENTIFICATION: Cleaning, painting and identification of piping and equipment shall be as specified under section entitled "Painting of Buildings - Field Painting".

12. IDENTIFICATION TAGS AND PLATES: All equipment, gages, thermometers, valves, and controllers shall be provided with tags numbered and stamped for their use. Plates and tags shall be of brass or suitable nonferrous material and shall be securely mounted or attached.

13. INSTALLATION:

13.1 General: Equipment and components shall be completely installed in a manner to insure proper and sequential operation of the equipment and its controls. Installation of equipment not covered herein in manufacturer's instructions shall be installed as directed by manufacturer's representative. Proper foundations for mounting of equipment, accessories, appurtenances, piping and controls shall be provided, including, but not limited to supports, vibration isolators, stands, guides, anchors, clamps and brackets. Foundations for equipment shall conform to equipment manufacturer's recommendation, unless otherwise shown on drawings. Anchor bolts and sleeves shall be set accurately using properly constructed templates. Anchor bolts shall be of adequate length and provided with welded-on plates on the head end embedded in the concrete. Equipment bases shall be leveled, using jacks or

steel wedges, and neatly grouted-in using a nonshrinking type of grouting mortar. Equipment shall be located so that working space is available for all necessary servicing such as shaft removal, disassembling compressor cylinders and pistons, replacing or adjusting drives, motors, or shaft seals, access to water heads and valves of shell and tube equipment, tube cleaning or replacement, access to automatic controls, refrigerant charging, lubrication, oil draining and working clearance under overhead lines. Electric isolation shall be provided between dissimilar metals for the purpose of minimizing galvanic corrosion.

13.2 Central refrigeration equipment shall be installed as indicated, in accordance with the requirements of ANSI B9.1, and as recommended in the manufacturers installation and operational instructions. Installation of water chillers and cooling towers shall be supervised by the manufacturer's representative.

14. QUALITY ASSURANCE PROVISIONS:

14.1 Inspection: Materials, equipment, and the completed installation will be inspected by the Contracting Officer. All equipment, materials, or work rejected because of defects or non-conformance with plans and specifications shall be replaced or corrected, by the Contractor as directed, at no additional cost to the Government.

14.2 Tests: All tests shall be performed and materials and equipment required for test shall be furnished by the Contractor. Defects disclosed by the test shall be corrected by the Contractor at no cost to the Government. Test after installation and prior to acceptance shall be performed in the presence of the Contractor Quality Control representative and subject to his approval. When available the Government will provide water and electric power. Equipment and material certified as having been successfully tested by the manufacturer in accordance with referenced specifications and standards will not require retesting before installation. Equipment and materials not tested at the place of manufacturer will be tested before or after installation, as applicable, where necessary to determine compliance with referenced specifications and standards.

14.2.1 Field tests of water chillers and cooling towers shall be supervised by the manufacturers representative.

14.2.2 Tests for Cooling Towers: Cooling towers shall be tested by a qualified independent testing agency, in the presence of the Contractor Quality Control representative and manufacturer's representative's in accordance with either American Society of Mechanical Engineers Power Test Code, PTC-23, for Atmospheric Water Cooling Equipment or Cooling Tower Institute Bulletin ATP-105, Acceptance Test Procedure for Industrial Water-Cooling Towers.

14.2.2.1 Prior to commencing tests, testing agency shall have been approved by Contracting Officer and shall have submitted adequate

documentation to satisfy Contracting Officer as to competence of test observers. Reference in Cooling Tower Institute Bulletin ATP-105 to "CTI Observer" shall be interpreted to mean testing agency observer, no arrangements or agreements with CTI are implied or desired.

14.2.2.2 Tests shall be simultaneously observed by Government and manufacturer's representatives, and all calculations shall be performed immediately following tests and shall be signed by observers.

14.2.2.3 All air temperatures shall be taken by mechanically aspirated psychrometers. Air temperatures shall be taken in accordance with paragraph 4.07 of ASME Power Test Code PTC-23 and such temperatures shall be used as ambient conditions in lieu of measurements indicated in paragraph 4.06; when using CTI procedure, temperature measurement shall be in accordance with paragraph 3.3 of Bulletin ATP-105.

14.2.2.4 Sufficient thermometers shall be provided to read all air and water temperatures simultaneously. Immediately prior to tests, all thermometers shall be calibrated by simultaneous immersion in hot well, or other mutually agreed upon method, and correction factors and points of utilization for each thermometer shall be noted together with its serial number.

14.2.2.5 Contractor shall submit to Contracting Officer all computations together with six complete sets of test results. Computations and test results shall be presented in full compliance with particular test procedure employed by testing agency.

14.2.2.6 In event the cooling tower fails to perform as specified, Contractor shall make corrections or replace cooling tower. Contractor shall then repeat test as specified above, at no additional cost to Government. This procedure shall be repeated until cooling tower test confirms that the cooling tower performs as specified.

14.3 Leak testing, dehydration, charging, and adjustment of water chillers shall be supervised by a representative of the manufacturer.

14.4 Water Treatment for Cooling Tower: Water treatment shall be provided in the cooling tower for the circulating water. The treatment shall consist of 12 plastic-coated glass mesh feeding bags, each holding 5 pounds of a slow-dissolving glassy polyphosphate in plate form, for each 10 tons of refrigeration capacity. The bags shall be suspended 6-inches above the tower basin water level so that they will be wet when the sytem is operating and dry when the system is not operating. The bags shall be so arranged that they will cause no noticeable restriction in the air flow through the tower. The feeding bags shall be provided in the cooling tower fully charged and 1 additional 100-pound drum of Micromet Plates, or approved equal, along with 12 additional plastic-coated cloth feeding bags shall be furnished to the Contracting Officer. Provide cooling tower bleed-off of 10 gallons per hour for each 5 tons of refrigeration capacity.

14.5 Extent of Field Tests: After installation and before acceptance, the work of this section shall be subjected to all necessary field tests, including those herein specified in Section entitled, "TESTING AND BALANCING AIR AND WATER SYSTEMS".

---END---

SECTION 15654. REFRIGERATION EQUIPMENT FOR REFRIGERATED STORAGE ROOM

1. APPLICABLE PUBLICATIONS: The following publications of the issues listed below, but referred to thereafter by basic designation only, form a part of this specification to the extent indicated by the references thereto:

1.1 Federal Specification (Fed. Spec.):

GG-G-76C	Gages, Pressure and Vacuum, Dial Indicating.

1.2 American National Standards Institute (ANSI) Standard:

ANSI B9.1	American Standard Safety Code for Mechanical Refrigeration.

1.3 Air-Conditioning and Refrigeration Insittute (ARI) Publications:

410	Standard for Forced-Circulation Air-Cooling Coils.
420	Forced-Circulation, Free-Delivery Air-Coolers for Refrigeration.
421	Application Engineering Standards for Forced-Circulation, Free Delivery, Air-Coolers for Refrigeration.
495-74	Standard for Refrigerant Liquid Receivers.
520-74	Standard for Positive Displacement Refrigerant Compressor and Condensing Units.
710	Standard for Liquid-Line Driers.
720	Standard for Refrigeration Flare Fittings.

1.4 American Society of Heating, Refrigerating and Air-Conditioning Engineers (ASHRAE) Codes and Standards:

25-68	Forced Convection and Natural Convection Air Coolers for Refrigeration, Methods of Testing for Rating.
14-67	Condensing Units, positive displacement, mechanical, methods of testing for rating.
63-68	Liquid Line Refrigerant Driers.
17-66	Standard Method of Testing and Rating Refrigerant Expansion Valves.
34-67	Standard Designation of Refrigerants.

1.5 American Society for Testing and Materials (ASTM) Publications:

D1692-76	Rate of Burning or Extent of Burning of Cellular Plastics Using a Supported Specimen by a Horizontal Screen, test for.
B88-75	Seamless copper water tube, spec. for.
B280-77	Seamless copper tube for air conditioning and refrigeration field service, spec. for.

1.6 Underwriters Laboratory (UL):

303-68 Refrigeration and Air Conditioning Condensing and Compressor Units.

2. QUALITY CONTROL: Approval, except those required for field installation, field applications and field tests, shall be obtained before any fabrication is started and before delivery of material or equipment to the project site.

3. SUBMITTALS:

3.1 Shop drawings approved and submitted to the Contracting Officer for recorded purposes before work is started. Drawings shall show types, sizes, locations, metal gauges, hardware provisions, installation details, and other details of construction. Electrical wiring and refrigerant piping diagrams for each system and unit.

3.2 Manufacturer's Installation Procedures: Manufacturer's currently recommended installation procedures for room shall be approved and submitted, in triplicate to the Contracting Officer for recorded purposes. Installation procedures shall accompany the shop drawings.

15654

3.3 Manufacturer's Data: Manufacturer's standard drawings or catalog cuts of the following items shall be submitted to the Contracting Officer for approval.

a. Condensing Units.
b. Unit coolers.
c. Controls and appurtenances.
d. Piping and arrangements.

3.4 Certificates of Conformance or Compliance: Before delivery of equipment, certificates, in triplicate attesting that materials and accessories meet the requirements specified shall be approved and submitted to the Contracting Officer for record purposes.

a. Condensing Units.
b. Unit coolers.
c. Controls and appurtenances.
d. Piping and arrangements.

4. DELIVERY, STORAGE AND HANDLING OF MATERIALS: Materials shall be delivered to the job site wrapped in a protective covering, with the brands and names clearly marked thereon. Materials shall be stored in dry locations with adequate ventilation free from dust, or water and in such a manner to permit easy access for inspection and handling. Materials shall be handled carefully to prevent damage to the faces, edges, and ends. Damaged items that cannot be restored to like-new condition shall be replaced at no additional cost to the Government.

5. SAFETY STANDARDS: Design, manufacture and installation of mechanical refrigeration systems shall meet safety requirements of ANSI B9.1.

6. TESTING AND RATING: Refrigeration equipment shall be manufactured and furnished in conformity with following Standards of ARI and ASHRAE:

6.1 ARI Standards:

410	Stand	Change "410" to "410-72"a Air-Cooling Coils.
420	Forc	Change "420" to "420-77"elivery Air-Coolers for
	Refri	Change "495" to "495-74".
421	Appli	Change "520" to "520-74".ds for Forced-Circulation,
	Free	Change "710" to "710-71". Refrigeration.
495	Stand	Change "720" to "720-76". Receivers.
520	Standard for Positive Displacement Refrigerant Compressor and Condensing Units.	
710	Standard for Liquid-Line Driers.	
720	Standard for Refrigeration Flare Fittings.	

6.2 ASHRAE Codes or Standards:

63	Standard Methods Line Driers.	Change "63" to "63-68".
17	Standard Metho Expansion Valves.	Change "17" to "17-75". Change "34" to "34-78".
34	Standard Designation of Refrigerants.	

6.3 American National Standards Institute:

B9.1	Safety Code for Mechanical Refrigeration.

7. GENERAL:

7.1 Extent of work includes the installation of refrigeration system for walk in Refrigerated Storage Room specified in section entitled "Refrigerated Room". Included are unit coolers, compressors, piping, controls, lighting and all appurtenances as specified herein and as necessary for complete and operating systems.

7.2 General requirements shall be as specified in section entitled "General Requirements, Mechanical", and as specified herein.

8. EVAPORATORS:

8.1 General: Units shall be forced-ventilation type designed for a 35°F temperature. Unit shall have internal or external refrigerant distributor, single or multiple fans and motors, drip-pan, deflectors, aluminum or baked-enamel steel housing, hangers, and all accessories; shall have tubing and fittings jointed with refrigerant-grade high temperature solder; and shall be pressure-tested gastight and sealed, with dry nitrogen or refrigerant.

8.1 Add this sentence to the specification "Evaporator capacity shall match the capacity of the condensing units."

8.2 Construction: Cabinets shall be of neat design with no sharp corners. Provide means to render motor vibration inaudible.

8.3 Direct Refrigerant Expansion Type Air Cooling Coils: shall be ccopper tubes and aluminum fins. Cooling coils shall have been tested to 300 psig.

8.4 Fans: Propeller type mounted directly upon motor shaft; factory trued and dynamically balanced.

8.5 Louvers: Provide horizontally discharging unit coolers with adjustable, locking type louvers arranged to deflect air horizontally from cabinet type units provided.

8.6 Evaporator fan motors shall be resiliently mounted shaded-pole type with built-in overload protection and permanently lubricated bearings. Coils shall be constructed from seamless copper tubes mechanically expanded into aluminum fins. Fan motors shall be for 120V-60 Hz-1 ph electrical characteristics.

8.7 All units shall carry the U.L. approval label and shall be in accordance with ARI standard 420-69, and ASHRAE Standard 25-68.

9. DRAIN LINES: Drain lines shall be provided for all evaporators and shall pitch a minimum of 1/2 inch per foot. All drain lines shall be provided with a trap outside the refrigerated area and shall discharge into an open waste.

10. CONDENSING UNITS:

10.1 Condensing units shall be the reciprocating semi-hermetic type having capacities of 12,450 Btu/hr. The unit condensers shall be water cooled. All condensing units shall be in accordance with ARI Standard 520-68, ASHRAE Standard 14-67 and Underwriters Laboratory Standard UL 303-1968. Condenser water entering temperature shall be 85°F.

10.2 Condensing units shall be complete with reciprocating semi-hermetic compressor, condenser, receiver, high-pressure cutout, low-pressure cutout, start-stop switch, motor protection, holding charge, oil charge, lubrication failure protection, oil level indicator, crankcase oil heater, oil pressure connection, suction and liquid shut-off valves, means for connecting pressure side relief, base or frame, piping between compressor and condenser, nameplate and printed instructions, all as applicable and stated in Table 2 of ARI Standard 520-68.

10.3 Electrical characteristics for condensing units shall be 460 volts, 3 phase, 60 Hertz.

10.4 Refrigerant pressure limit controls may be combined into one instrument.

10.5 High pressure cutout switch shall be manual reset; low pressure switch automatic reset; both may be restart type.

10.6 Provide condenser unit with manual shutoff for refrigerant inlet and outlet connections.

10.7 Provide vibration supressing base and vibration isolating connectors for each refrigerant, drain and electrical service connection; machine and safety controls for automatic operation; magnetic type motor starting device, thermostats, pressurestats, refrigerant pressure and temperature gages, oil separator device and return piping, filter dryer, refrigerant and electrical connections; and all adjuncts required for quiet, efficient and continuous operation.

10.8 Condenser Water Piping shall conform to section entitled "Central Refrigeration Equipment for Air Conditioning".

11. PIPING AND SPECIALTIES:

11.1 Protect refrigerant systems during erection against entrance of foreign matter, dirt and moisture; have open ends of piping and connections to compressors, condensers evaporators and other equipment tightly capped until assembly.

11.2 Refrigerant mains and connections shall be copper tubing, Type "K", ASTM B88, bright annealed, dehydrated and sealed. Soft temper tubing ASTM B280 may be used where bending is required, where tubing is to be hidden and where flare joints are to be used. Hard drawn tubing shall be used for silver brazed lines where no bending is required. Copper tubing joints up to 5/8 inch inclusive shall be flared or silver brazed; above 5/8 inch silver brazed. Flare joints shall be made with flaring tools. Silver brazing wire shall be used on brazed joints. Flare nuts shall be short shank type.

11.3 Fittings: Shall be non-ferrous for refrigeration service designed for a working pressure of not less than 300 psig. Flare type fittings shall conform to ARI Standard 720. Design solder joint type with proper length and clearance (for strong gas-tight joints with silver solder) from wrought copper, forged bronze, or drawn brass. Fittings adjacent to expansion valve shall be frost-proof design.

11.4 Liquid Refrigerant Lines: Shall be installed with heat-exchangers, liquid indicators, strainers, filter dryer with 3-valve by-pass of same size as line, manual shut-off valves, solenoid valves and automatic refrigerant expansion valves. Size of liquid lines not indicated on drawings shall be sized by the manufacturer with latest edition of ASHRAE Guide.

11.5 Refrigerant Suction Lines: Shall be installed with heat exchangers, shut-off valves and strainers, and pilot-operated back-pressure regulating valve. Size of suction lines not indicated on drawings shall be sized by the manufacturer in accordance with latest edition of ASHRAE Guide.

Total friction for suction lines from evaporator to compressor manifold shall not exceed a pressure equivalent to two degrees temperature drop from specified refrigerant suction temperature at evaporator. Refrigerant Pipe Insulation shall conform to section entitled "Insulation of Mechanical Systems".

11.6 Flexible Vibration Isolators: Corrugated type, nonporous bronze alloy, installed on liquid and gas refrigerant lines.

11.7 Valves: Refrigeration service, packless type, shall be backseating design with triple diaphragms.

11.8 Furnish and install pressure relief devices or fusible plugs in conformity with ANSI B9.1 Safety Code.

11.9 Strainers: Shall permit removing screen without removing strainer body from piping system. Liquid line strainers up to 1-1/8 inch inclusive shall have 80 or 100 mesh screens, larger than 1-1/8 inch, 60 mesh. Suction line strainers shall be provided with 40 mesh screens. Provide strainers in liquid line serving each thermostatic expansion valve and in suction line serving each refrigerant compressor not equipped with integral strainer.

11.10 Liquid Indicators: Shall be installed in liquid line serving each thermostatic expansion valve and be double ported type having heavy sight glass sealed into forged bronze body. Provide liquid indicator with a cap and seals to prevent leakage of refrigerant when not in use and provide inlet and outlet connections of same size as line being served.

11.11 Filter Dryer: Shall be installed in bronze by-pass with isolation valve line near each receiver and be angle type permitting replacement of filter dryer element without removing body from line. Size of filter dryer shall be as recommended by the manufacturer for service and capacity of system and have connections not less than line in which installed.

11.12 Oil Separators: Shall be provided for refrigerant compressing condensing unit. Size of oil separator shall be based upon total system BTU. Oil separator shall be float valve type designed to automatically return oil to compressor crank-case and when not as integral part of compressor, shall be removable head type to permit servicing without removing body from line.

11.13 Pressure-Temperature Gages: shall be Fed. Spec. GG-G-76, Class 1 or Class 3, Type III as applicable, having 4-1/2 inch metal cases suitable for mounting on gageboard. Dials shall be graduated in pounds per square inch and corresponding temperature in accordance with the following:

Type of Application	Pressure Range
Refrigerant Compressure Suction	30 inches Vacuum to 150 psig and corresponding temperature.

Refrigerant Compressor	0 to 300 psig and
Discharge Pressure	Corresponding Temperature

Furnish and install gages to indicate compressor suction and discharge pressures.

11.13.1 Metal cases shall be constructed of aluminum bonderized and finished with black enamel epoxy.

11.14 Pipe hangers and supports, inserts, fasteners, bolts, pipe hanger location, pipe sleeves, floor, wall, and ceiling plates, anc anchors shall conform to section entitled "Supports and Sleeves" except that where insulated refrigerant suction lines are supported, they shall be provided with galvanized sheet metal protection shields conforming to section entitled "Insulation of Mechanical Systems", and shall be installed without piercing the vapor-barrier.

11.15 Thermostatic Refrigerant Expansion Valves: Shall serve each flurinated hydrocarbon type unit cooler with required amount of refrigerant to temperature (based upon 2 nominal 10 degrees F. SUPERHEAT), and pressure within suction line. Refrigerant expansion valves shall be manually adjustable and automatic in operating; shall have integral power assembly and remote temperature-sensing bulb; shall have external pressure equalizer; and shall be provided with an auxiliary refrigerant distributor except when refrigerant distribution is properly equalized within the unit cooler. Thermostatic valve shall be bronze or other corrosion resisting material and installed in conformity with recommendations of the valve manufacturer for the intended service.

11.16 Solenoid Valves: Shall be installed in liquid refrigerant line as a primary refrigerant flow control device permitting or stopping flow of refrigerant to automatic expansion valve. Solenoid valves shall be moisture and vaporproof and of corrosion resisting materials; designed for intended service; positive opening and closing action.

11.17 Thermometers: Shall be chrome plated, circular type with minimum 4-1/2 inch diameter white dial with black numbers and graduations. Conveniently position thermometer at eye level on wall panel away from door opening for accurate reading with stainless steel bulb and capilliary extending through wall panel and fixed on wall or ceiling. Remote bulb shall be protected with a suitable guard. Opening in wall shall be sealed tight against leakage with insulation restored, vapor sealed and escutcheon plates provided.

11.17.1 Thermometers shall be provided and shall conform to section entitled "Automatic Temperature and Humidity Control".

12. TEMPERATURE CONTROL:

12.1 Refrigerated room shall have the temperature controlled by a self-contained remote bulb, liquid filled reverse acting thermostat, energized by the previously specified "start"-"stop" switch; thermostat shall automatically open or close the solenoid type liquid refrigerant valve with accuracy of plus or minus 2 degrees F. Thermostats shall have sealed mercury bulb type switch with manual adjustment within minimum operating ranges indicated. Opening in wall shall be treated as specified for THERMOMETER.

12.2 Evaporators in coolers will be without defrost cycle and defrost will occur during "off" cycles. The unit evaporator fans are to run continuously with a toggle switch provided at unit for manual shut down.

13. TEMPERATURE ALARMS: Coolers and Freezers shall be equipped with a temperature alarm and red alarm light, actuated by thermostat. Light and buzzer shall be located alongside thermometer and properly labeled. Provide local silencing switch for buzzer. Alarm light to remain lit. Thermostat sensitivity shall be plus or minus 2 degrees F. Thermostat shall be located against wall at ceiling. Alarm light shall have square or round flange, red lens, 7-1/2 watt light bulb and be flush mounted. Alarm shall be provided with auxiliary contacts for connection to building EMCS system.

14. TESTS:

14.1 Piping Tests: After the refrigeration piping and fittings have been assembled, all flux shall be removed from connections and all lines shall be clean. The piping system shall be blown out with dry nitrogen to remove any free water or dirt which might be present. The refrigerant lines shall be charged with dry nitrogen and proven tight at minimum gauge pressures of 300 PSI on the high side and 150 PSI on the low side. The system shall hold these pressures for a period of 24 hours without pressure drop except for pressure change due to temperature differential.

14.2 Evacuation and dehydration: After the piping system has been proven tight by the pressure test, evacuation and dehydration of the system shall be accomplished using the double evacuation method described in the following paragraphs.

14.3 Equipment and Conditions: Provide a two stage, high vacuum pump capable of pumping down to 100 microns or lower while evacuating the system, and of adequate displacement to evacuate the various systems within a reasonable period of time based upon maximum vacuum of 5.16 millimeters of mercury absolute. Also provide a wet-built vacuum indicator, a supply of 100 percent methyl alcohol for use with this instrument and a temperature-pressure conversion chart for 100 percent methyl alcohol. The evacuation shall be done only when the ambient air temperature is 50 degrees F. or higher. Go no lower than 5.16 millimeters of mercury absolute on the evacuation procedure to prevent the formation of ice in the piping system.

14.4 Primary Evacuation: This procedure begins after the vacuum pump and wet-bulb vacuum indicator have been properly attached to the piping system. The vacuum pump is operated continuously until the pressure within the system reaches 5.16 millimeters of mercury absolute at which point the pump is stopped.

14.5 Secondary Evacuation: Using the same dry refrigerant with which the system is to be charged, break the vacuum and bring the system pressure to a point slightly above atmospheric pressure. Start the vacuum pump, and using the wet-bulb vacuum indicator, evacuate the system to 5.16 millimeters of mercury absolute. Stop the vacuum pump and charge the system with a full charge of dry refrigerant.

15. OPERATIONAL TEST:

15.1 Contractor to operate system and record hourly operating conditions for eight hours with each compressor by furnishing and certifying the following information to the Contractor Quality Control Organization for approval, and submitted to the Contracting Officer for record purposes.

15.2 Indicate NAVFAC Project Number, contractor, date, cooler name and room number. Time of day for record data.

Compressor:

Approximate running time
Pressure Gage Readings (Suction and Discharge)
State (Running or Idle)
Temperature degrees F.
  Condenser Water in and out

Compressor Name Plate Data:

Make
Model
Displacement
Horsepower
R.P.M.
Actual Amps (Starting and Running)
Refrigerant Type
System Charge in lbs.

Refrigerated Rooms

Temperature degrees F.

---END---

SECTION 15711 HOT WATER HEATING AND CHILLED WATER COOLING SYSTEM

1. APPLICABLE PUBLICATIONS: The following publications of the issues listed below, but referred to thereafter by basic designation only, form a part of this specifications to the extent indicated by the reference thereto:

1.1 Federal Specifications:

GG-G-76D & Int. Am 1	Gages, Pressure and Vacuum, Dial Indicating, (For Air, Steam, Oil, Water, Ammonia, and Chloro-fluro Hydrocarbon Gases).
GG-T-321C & Am 1	Thermometers, Self-indicating, Liquid-in Glass For Machinery and Piping System.
QQ-S-571E	Solder, Tin Alloy, Lead-tin Alloy and Lead Alloy.
QQ-W-461G	Wire, Steel, Carbon (Round, Bare and Coated).
WW-T-696C & Am 1	Trap, Steam and Air.
WW-U-516C	Union, Pipe, Bronze or Naval Brass, Threaded Pipe Connection, 250-Pounds.
WW-U-531D	Union, Pipe, Steel or Malleable Iron, Threaded Connection.
WW-V-51F & Int Am 1	Valve, Bronze, Angle, Check and Globe, 125 and 150 pound, Screwed and Flanged (For Land Use)
WW-V-54D	Valve, Gate, Bronze (125, 150 and 200 pound) Screwed Flanged, Solder End, (For Land Use).
WW-V-58B	Valve, Cast-iron, Gate, 125 and 250 Pound, Screwed and Flanged (For Land Use).
WW-V-35B	Valve, Ball.
WW-V-160A	Valves, Radiator, Heating (Packed and Packless).
QQ-B-626D	Brass, leaded and non leaded: Rod, Shapes, Forgings, and Flat Products with Finished Edges (Bar and Strip).

1.2 Military Specifications:

MIL-T-9955A	Thermometer, Indicating, Capillary Tube and Bulb, Flush Mounting.
WW-H-191B	Heater, Water, Steam-Hot Water Heated, (Instantaneous, Steam, Water Converter Type).
MIL-V-12003E & Am 1	Valve, Plug, Cast-iron or Steel, Operated.
MIL-S-16293F	Strainer, Sediment, Pipe Line, Water, Air, Gas, Oil or Steam.
MIL-P-17552C & Am 1	Pumps, Centrifugal, Water, Horizontal, General Service, and Pumps, Centrifugal, Water Horizontal, Boiler Feed, Electric Motor or Steam Turbine Driven.
MIL-U-17691B	Unit Heater, Air-circulating, Steam-hot Water.
MIL-H-17713B	Gages, Liquid Level Measuring, Tank.
MIL-R-17772B	Radiators, Heating, Baseboard Panel, Steam and Hot Water.
MIL-V-18434B	Valves, Gate, Globe and Angle, Steel.

MIL-V-18436C & Int AMD 1	Valves, Check.
MIL-H-18551B	Heaters, Convection, Steam or Hot Water.
MIL-V-18826A	Valve, Globe and Angle, Cast Iron.
MIL-T-21092B	Trap, Air and Water, Ball Float (150 PSI).
MIL-P-16077A	Pumps, Centtrifugal, Water Circulating, Electric-Motor-Driven.

1.3 American National Standards Institute (ANSI) Publications:

B1.1-1974	Unified Screw Treads.
B2.1-1968	Pipe Threads (Except Dryseal).
B15.1-1972	Mechanical Power Transmission Apparatus, Safety Standard for.
B16.1-1975	Cast Iron Pipe Flanges, and Flanged Fittings, 25, 125, 250, and 800 pound.
B16.3-1971	Malleable-Iron Screwed Fittings, 150 and 300 pounds.
B16.5-1973	Steel Pipe Flanges and Flanged Fittings.
B16.9-1971	Factory-Made Wrought Steel Buttwelding Fittings.
B16.11-1973	Forged Steel Fittings, Socket-welding and Threaded.
B16.18-1972	Cast Bronze Solder Joint Pressure Fittings.
B16.20-1973	Ring-Joint Gaskets and Grooves for Steel Pipe Flanges.
B16.21-1962	Nonmetallic Gaskets for Pipe Flanges.
B16.22-1973	Wrought Copper and Bronze Solder-Joint Pressure Fittings.
B16.24-1971	Bronze Flanges and Flanged Fittings, 150 and 300 pounds.
B18.2.1-1972	Square and Hex Bolts and Screws, Including Askew Head Bolts, Hex Cap Screws, and Lag Screws.
B18.2.2-1972	Square and Hex Nuts.
B31.1-1973	Power Piping.
Z49.1-1973	Welding and Cutting, Safety in.

1.4 American Society for Testing and Materials (ASTM) Publications:

A53-75	Welded and Seamless Steel Pipe.
A120-77	Black and Hot-Dipped Zinc-Coated (Galvanized) Welded and Seamless Steel Pipe for Ordinary Uses.
A194-76	Carbon and Alloy Steel Nuts for Bolts for High-Pressure and High-Temperature Service.
B88-76A	Seamless Copper Water Tube.
C635-69	Metal Suspension Systems for Acoustical Tile and Lay-In Panel Ceilings.
D2000-75	Elastomeric Materials for Automotive Applications, Classification, System for.
D2135-67	Hard Rubber Materials, Classification of.
C636-76	Installation of Metal Ceiling Suspension Systems for Acoustical Tile for Lay-In Panels.

1.5 American Society of Mechanical Engineers (ASME) Publications:

ASME Boiler and Pressure Vessel Code Section VIII - Pressure Vessels - Division 1 - 1971
Change "1971" to "1977".

1.6 American Water Works Association (AWWA) Publication:

C504-74 Rubber-seated Butterfly Valves.

1.7 The Copper Development Association Publication:

Copper Tube Handbook.

1.8 Manufacturer's Standardization Society of the Valves and Fittings Industry (MSS) Publications:

SP58-75 Pipe Hangers and Supports - Materials and Design.

SP69-76 Pipe Hangers and Supports - Selection and Application.

1.9 Air Moving and Conditioning Association Standards:

Bulletin 13 Unit Heater Division.

2. GENERAL:

2.1 Extent of Work: The work consists of providing a complete heating hot water system within the building including heating hot water piping (supply and return), convertors, circulating pumps and terminal units used for heating. In addition the work consists of providing a complete chilled water system within the building. Piping as used in this specification includes pipe, tubes, flanges, bolting, gaskets, valves, relief valves, fittings, and pressure containing parts of other piping components.

2.2 Associated Work: Other work associated with chilled water and heating hot water systems and terminal units includes:

2.2.1 Insulation of piping and equipment specified in section entitled "Insulation of Mechanical Systems".

2.2.2 Space.....In the second line delete the word "Automatic".

2.2.2 Space and systems temperature control is specified in section entitled "Automatic Temperature and Humdity Control Systems".

2.3 General Requirements: General requirements include those specified in section entitled "General Requirements, Mechanical", and the additional requirements specified herein below.

2.3.1 Underground piping corrosion protection shall conform to section entitled "Coal Tar Coating Systems For Steel Surfaces".

2.3.1 Underground piping.....In the second line change "Coal Tar Coating Systems For Steel Surfaces" to "Insulation of Mechanical Systems".

2.4 Classes and Maximum Working Pressures: In the third line change the word "indicated" to "of the systems in which installed".

2.3.2 Supports, hangers, anchors, sleeves and plates conform to section entitled "Supports and Sleeves".

2.3.3 Testing and balancing of systems shall conform to section entitled "Testing and Balancing Air and Water Systems".

2.4 Classes and Maximum Working Pressures: Except as specified otherwise, equipment, piping, and piping components shall be suitable for use under the maximum working pressures indicated. Except as modified herein, the pressure and temperature limitations shall be as specified in the referenced standards and specifications. All pressures in this specification are pressures in pounds per square inch (PSI) above atmospheric pressure, and all temperatures are in degrees Fahrenheit (f).

2.5 Safety Standards:

2.5.1 Welding: Safety in welding and cutting of pipe shall conform to ANSI Z49.1.

2.5.2 Couplings motor shafts, gears or other moving parts shall be fully guarded, in accordance with ANSI B15.1 "Safety Code for Mechanical Power-Transmission Apparatus". Guards shall be cast iron or expanded metal. Guard parts shall be rigid and suitably secured and be readily removable without disassembling the guarded unit.

3. SUBMITTALS:

3.1 Items specified in this section of the specifications and which require submittals for approval are scheduled herein. In addition to shop drawings, provide schedule information in the "Operation and Maintenance Manual". Submittals and information for Operation and Maintenance Manual shall be in accordance with section entitled "General Requirements Mechanical".

3.2 Submittals shall consist of manufacturer's literature and shall indicate specification section and paragraph number for which the submittal is intended.

3.3 Manufacturer's Data on the following items shall be submitted to the Contracting Officer for approval.

a. Converters
b. Circulating Pumps
c. Air Separators
d. Compression Tanks
e. Compression Tank Level Control
f. Radiation Units
g. Cabinet Unit Heaters
h. Unit Heaters

4. PIPE AND PIPE SYSTEM:

4.1 General: Piping system as used in this specification includes pipe, flanges, boltings, gaskets, valves, relief devices, fittings, and the pressure containing parts of other piping components. It also includes hangers and supports and other equipment items necessary to prevent overstressing the pressure containing parts.

4.1.1 Chilled Water Piping System: Chilled water piping system shall conform to ANSI B31.1, the documents referenced therein, and those referenced in this specification for a working pressure of 125 psi, at a temperature of 353 degrees F.

4.1.2 Hot Water Heating and Heat Recovery Piping system: Hot water heating piping system shall conform to the requirements specified herein for a working pressure of 125 psi, and a temperature of 353 degrees F.

"4.2x Hot Water Heating Pipe: Hot water heating pipe (supply and return) shall be schedule 40 steel pipe conforming to ASTM A120 or A53 or type K copper tubing conforming to ASTM B88.: . Pipe used for bending shall conform to ASTM A53.

"4.3x Chilled Water Pipe: Chilled water pipe (supply and return) shall be schedule 40 steel pipe for sizes 10-inch and smaller and 0.5-inch wall thickness for 12-inch size and larger conforming to ASTM A120 or A53." Pipe used for bending shall conform to ASTM A53.

4.4 Mechanical couplings may be used in conjunction with grooved fittings and pipe for chilled water systems in lieu of threaded joints. The coupling clamp shall be malleable iron conforming to ASTM A47, grade 35510, or ductile iron conforming to ASTM A536, grade 65-45-12. The gasket shall be molded rubber conforming to ASTM D2000, grade No. 3BA615A14 B13 with special heat resistance test of 16 hours at 380°F and maximum elongation change of minus 30 percent. Coupling nuts and bolts shall be steel conforming to ASTM A183. Grooved fitting shall be malleable iron conforming to ASTM A47, grade 35510 or ductile iron conforming to ASTM A536, grade 65-45-12. Mechanical couplings and fittings shall be of the same manufacturer.

4.5 Fittings: Fittings shall be compatible with the pipe being used, and shall conform to the following requirements.

4.5.1 Fittings for Steel Pipe:

4.5.1.1 Fittings in size 1/8 to 2 inches shall be steel or malleable iron with requirements as follows:

4.5.1.1.1 Steel fitting shall be the socket welding or screwed type conforming to ANSI B16.11.

4.5.1.1.2 Malleable iron fitting shall be of the screwed type conforming to ANSI B16.3.

4.5.1.2 Fittings in sizes 2-1/2 inches and above shall be steel, cast iron, or bronze with requirements as follows:

4.5.1.2.1. Steel fittings shall be of the butt welding type conforming to ANSI B16.9, or flanged tpe conforming to ANSI B16.5.

4.5.1.2.2 Cast iron fittings shall be of the flanged type conforming to ANSI B16.1.

4.5.1.2.3 Bronze fittings up to 8 inch size shall be of the flanged type conforming to ANSI B16.24.

4.5.2 Fittings for Copper Tubing: Fittings for copper tubing shall be cast bronze solder joint type conforming to ANSI B16.18 or wrought copper solder joint type conforming to ANSI B16.22. Fittings may be flared or compression joint type.

4.6 Unions:

4.6.1 Unions for Steel Pipe: Unions (threaded) for steel pipe shall conform to WW-U-531, Type A, class 1, "T" thread, "B" end style.

4.6.2 Unions for Copper Tubing: Unions for copper tubing shall conform to WW-U-516, Type III, Style A, and shall be solder joint end type.

4.7 Flanges: The raised faced on flanges shall be removed when used with flanges having a flat face.

4.7.1 Steel Flanges: Steel flanges shall be forged steel, welding type conforming to ANSI B16.5.

4.7.2 Cast Iron Screwed Flanges: Cast iron screwed flanges shall conform to ANSI B16.1.

4.7.3 Bronze Screwed Flanges: Bronze screwed flanges shall conform to ANSI B16.24.

4.8 Valves:

4.8.1 Valves-Gate, Globe, Angle, Check, Special and Related Equipment: Valves shall conform to the following paragraphs. Valves shall have rising stems and shall open when turned counterclockwise. End Connections on valves 2 inches and smaller shall be screwed, 2-1/2 inches and larger shall be flanged unless otherwise indicated or specified. Valves shall be designed, manufactured and tested specifically for the service intended in all respects including materials. Internal parts shall be removable for inspection or replacement without necessity of heating or breaking connections.

4.8.1.1 Valves, drain, for use in the various water piping systems shall be not less than 3/4" nominal pipe size and of materials specified herein for the corresponding valves in the system. Valves shall have threaded ends and be provided with a hose nipple adapter for connecting a hose to lead to a convenient floor drain. Valves shall be manually operated.

4.8.1.2 Application: Shutoff valves 2-1/2 inches and smaller shall be gate valves. Shutoff valves 3 inches and larger may be butterfly valves with adjustable limit stops and position indicator or gate valves. Butterfly valves under 6 inches shall be lever operated. Butterfly valves 6 inches and larger shall be gear operated. Valves at locations requiring throttling shall be globe, plug or ball type as specified herein. Balancing cocks shall be plug or ball type as specified herein. Check valves located in pump discharge shall be vertical nonslam type. All other locations shall be swing type unless indicated otherwise.

4.8.2 Gate Valves:

4.8.2.1 Bronze Gate Valves: Bronze gate valves, 2 inches and smaller, shall conform to WW-V-54, Type II, Class C, Style 1 or 3 as applicable shall be of the wedge disc, rising stem, inside screw type, shall have solder joint ends when used with copper tubing and shall be not less than 150 pound class.

4.8.2.2 Steel Gate Valves: Steel gate valves shall conform to MIL-V-18434, Type I, Class 150, Service G, Group 1. Valves shall be of the open stem and yoke type with solid wedge or flexible wedge disc, with trim of heat and corrosion-resistant steel as recommended by the manufacturer for the conditions indicated.

4.8.2.3 Cast Iron Gate Valves: Cast iron gate valves, 2-1/2 inches and larger, shall conform to WW-V-58. Valves shall be open stem and yoke type with valve trim of bronze.

4.8.3 Globe and Angle Valves:

4.8.3.1 Bronze Globe and Angle Valves: Bronze globe and angle valves, 2 inches and smaller, shall conform to WW-V-51, Type I or II as applicable, Class A or B as specified herein, and shall be 200 pound class, except that 150 pound class valves with solder ends may be used for copper tubing. All valves shall have renewable seats and discs except solder end valves which shall have integral seats.

4.8.3.2 Steel Globe and Angle Valves: Steel globe and angle valves shall conform to MIL-V-18434, Type II or III as applicable, Class 150, Service G. Group 1, and shall have heat and corrosion-resistant trim as recommended by the manufacturer for the conditions indicated.

4.8.3.3 Cast Iron Globe and Angle Valves: Cast iron globe and angle valves, 2-1/2 inches and larger, shall conform to MIL-V-18826, Type I or II as

applicable, Class 125, shall have bronze trim, and shall be provided with tapped drains and brass plug.

4.8.4 Check Valves:

4.8.4.1 Bronze Check Valves: Bronze check valves 2 inches and smaller, shall conform to WW-V-51, Type IV, Class C, shall be of the regrinding swing check type, renewable seat ring, and shall be of the 200 pound class.

4.8.4.2 Steel Check Valves: Steel check valves 2-1/2 inches and larger shall conform to MIL-V-18436, Group C, Type III, Style A, trim 5, and shall have heat and corrosion-resistant trim as recommended by the manufacturer for the conditions indicated.

4.8.4.3 Swing Check Valves: Swing check valves shall have bolted caps.

4.8.4.4 Cast Iron Check Valves: Cast iron check valves shall conform to MIL-V-18436, Group B, and shall be nonslam type for centrifugal pump discharge service. Valves shall be either spring-loaded lift check valves with wafer or globe body; or butterfly, spring-loaded, dual-disc check valves with wafer body. Springs shall be stainless steel. Discs and seats shall be bronze. Valves 2-1/2 through 12-inch size shall be Class 125. Valves 14 through 24-inch size shall be Class 250. Minimum cold water (100°F) rating shall be 175 psig.

4.8.5 Plug Valves:

4.8.5.1 Plug Valves (Chilled Water, Heating Water Distribution Piping): Non-lubricated plug valves shall be located as indicated and shall conform to MIL-V-12003, Type III, valves 4 inch and smaller, Style A, valves over 4 inch, Style B, Class 150, non-metallic seat.

4.8.6 Ball Valves:

4.8.6.1 Ball Valves: Valve size 2 inch and smaller shall be bronze body, double seal, full flow ball valve with polytetra fluoroethylene (teflon) seats and O-ring packing designed for working pressure up to 300 psi, with a chrome plated brass ball which seals in both directions. The valve shall require only a quarter turn of the handle from "open" to "closed" positions. Valves shall conform to WW-V-35B, Type II, Style 2 with threaded end connections.

4.8.6.2 Balancing valves located at fin tube radiation and cabinet unit heaters shall be ball valves with adjustable limit stops to permit closing valves and re-opening to preset balance position.

4.8.7 Radiator Valves:

4.8.7.1 Shutoff valves located at fin tube radiation and cabinet unit heaters shall conform to WW-V-160A, type II, Style D, Service 4, packless bonnet, metallic diaphragm for hot water and steam service.

4.8.8 Butterfly Valves:

4.8.8.1 Butterfly valves shall conform to AWWA C504, have malleable or cast iron bodies, ASTM A167,Type 304 or 316 stainless steel stems and cast iron discs, Buna "N" replaceable seats, and Buna "N" ASTM D2135 "O" rings or "V" packing for stems. Valves shall have necks extending two inches above the outside diameter of the companion flanges. Valve bodies shall be 150 psi ASA flanged, bubble tight at 150 psi difference across closed disc.

4.8.8.2 Valve Operating Mechanisms: Butterfly valves under 6 inches in size shall be lever operated, 6 inches and larger shall be gear operated. Valve operating mechanisms including chain wheels, gear operators, floor sands, electric motors, air motors, and cylinder type actuating devices shall conform to MIL-V-18434.

4.8.9 Valves, Drain: Provide drain valves at the base of all risers and low points of all systems to facilitate complete drainage of systems.

4.9 End Connections:

4.9.1 Steel Piping: Steel piping 2 inches and smaller shall be screwed or socket welded, and steel piping 2-1/2 inches and larger shall be flanged or butt welded.

4.9.2 Screwed Joints: Screwed joints shall be threaded in accordance with ANSI B2.1.

4.9.3 Flanged Joints: Flanges shall conform to paragraph 4.7. Bolting and gaskets shall be as follows:

4.9.3.1 Bolting: Material used for bolts and studs shall conform to ASTM A307, Grade B, and material for nuts shall conform to ASTM A194, Grade 2, Diemsnions of bolts, studs, and nuts shall conform to ANSI B18.2 with threads conforming to ANSI B1.1 coarse type with Class 2A fit for bolts and studs, and Class 2 B for for nuts. Bolts or bolt studs shall extend completely through the nuts and may have reduced shanks of a diameter not less than the diameter at root of threads. Carbon steel bolts shall have American Standard regular square or heavy hexagon heads and shall have American Standrad heavy semi-finished hexagonal nuts conforming to ANSI B18.2.

4.9.3.2 Gaskets: For hot water lines above 100 degrees F. gaskets shall be made of composition asbestos. Gaskets shall be of a material that resist attached by the fluid in the pipeline and shall be suitable for the pressure and temperature ranges encountered. Gaskets shall be as thin as the finish of surfaces will permit. Paper, vegetable fibe, rubber, or rubber inserted gaskets shall not be used for temperatures in excess of 250 degrees F. Metal

or metal-jacketed asbestos gaskets shall be used with small male and female or small tongue-and-groove flanges or flanged fittings; they may be used with steel flanges with lapped, large male and female, large tongue-and-groove, or raised facings. Full faced gaskets shall be used with flat-faced bronze flanges and with Class 125 cast iron flanges. Raised-face cast iron flanges, lapped steel flanges or raised-face steel flanges shall have ring gaskets with an outside diameter extending to the inside of the bolt holes. Widths of gaskets for small male and female and for all tongue-and-groove joints shall be equal to the widths of the male face or tongue. All gaskets shall have an inside diameter equal to or larger than the port opening. Rings for ring joints shall be in accordance with dimensions in ANSI B16.20, shall be suitable for the service conditions encountered, and shall be softer than the flanges. Dimensions for non-metallic gaskets shall be in accordance with ANSI B16.21.

4.9.4 Butt Weld Joints: Butt weld joints shall conform to ANSI B31.1. The use of backing rings shall conform to ANSI B31.1. Ferrous rings shall be of good weldable quality and shall not exceed 0.05 percent sulfur; for alloy pipe backing rings shall be of material compatible with the chemical composition of the parts to be welded and preferably of the same composition. Backing rings shall be of the continuous machined or split band type.

4.9.5 Socket Weld Joints: Socket weld joints shall conform to ANSI B31.1.

4.9.6 Joints for Copper Tubing: Copper tubing joints shall be solder type with 50/50 tin-lead solder conforming to QQ-S-571 for pressures up to 50 psi, or for pressures above 50 psi and below 150 psi 95/5 tin-antimony or 5/95 tin-lead solder conforming to QQ-S-571 shall be used.

4.10 Instrumentation:

4.10.1 Pressure Gages: Pressure and vacuum gauges shall conform to GG-G-76, Class 1, Style A, Type I, 4-1/2 inch diameter, and shall be located as indicated.

4.10.1.1 Gage Construction: Case shall be of aluminum alloy with black epoxy paint finish. Bourdon tube shall be phoshor bronze with stainless steel movement.

4.10.1.2 Initial Accuracy: Accuracy at a temperature of $75^{o}F. \pm 15^{o}F.$ shall be within one percent of the full scale value in the middle one-half section or 1-1/2 percent of the full scale value in the first and last 1/4 sections of the scale.

4.10.2 Indicating Thermometers: Indicating thermometers shall be of the liquid-in-glass or dial type. Liquid-in-glass thermometers shall conform to GG-T-321, Type I, Class 3, Range E, standard stem, and shall be located as indicated. Dial type thermometers shall conform to MIL-T-9955, and shall be located as indicated.

4.11.1.5 Strainers shall be.....Omit the period at the end of the second line and add ", and shall be provided with blowdown outlet with pipe nipple and gate valve."

4.11 Miscellaneous Pipeline Components:

4.11.1 Strainers: Strainers shall conform to MIL-S-16293 and as specified herein.

4.11.1.1 Furnish and install strainers before all control valves, unless noted otherwise, and where specified or indicated.

4.11.1.2 Strainers for pipes up to and including 1-1/2 inches shall be cast iron or semi-steel, screwed "Y" strainer, 250 pound construction, malleable iron bushing and 3/4-inch valve with hose adapter for water service, Type I, Class 250, Style Y.

4.11.1.3 Strainer 2 inches and over shall be cast iron, or semi-steel, flanged, "Y" strainer 125 pound construction, Type II, Style Y, Class 125, bolted cover flange with brass 3/4-inch valve with hose adapter for water service, unless specifically indicated otherwise.

4.11.1.4 Screen for hot water heating and chilled water systems shall be stainless steel. For strainers 2 inches and less, strainers shall be 20-mesh or 1/32 inch perforations; for striners 2-1/2 and 3 inches, 3/64 perforations; for 4 through 6 inches, 1/16 inch perforations and strainers 8 inches and larger, 1/8 inch perforations.

4.11.1.5 Strainers shall be line size before reduction for control valve (not valve size).

4.12 Air Vents:

4.12.1 Traps for venting air from water systems shall conform to MIL-T-21092.

5. CONVERTERS:

5.1 Steam to hot water convertors shall conform to WW-H-191 as modified herein and shall have capacity as indicated on the drawing schedule. Convertors shall be Type I, Design B (180°F. entering, 200°F. leaving temperature) Class 2. Heating surface shall be based on a fouling factor of 0.001. Water velocity in tubes shall not exceed 5 feet per second or less than 2 feet per second. Water pressure drop through the tubes shall not exceed 12 feet. The convertor shall be designed for floor support and vent valve and trap shall be furnished.

5.2 Accessories:

5.2.1 Furnish and install on each convertor between convertor water tapping and shut-off valve a pressure relief valve of required capacity set to relieve at 125 psig.

5.2.2 Furnish and install a thermostatic air vent on each convertor.

5.1 Steam to hot water.....In the seventh line omit the period immediately following the word "feet" and add "of water.".

5.3 Air Separators:

5.3.1 Furnish and install as shown on the drawings centrifugal type air separators complete with strainer. The separators shall be suitable for 125 pound working pressure. Strainer free area, size and capacity for each unit shall be as scheduled on the drawings.

6. COMPRESSION TANKS: Compression tanks shall be welded steel and shall be constructed and tested in accordance with Section VIII of the ASME Boiler and Pressure Vessel Code.

6.1 Tanks shall be complete with all accessories, including gauge glass wih guards, drain, overflow, and system connections and signal float. Size and capacity shall be as scheduled on the drawings.

6.2 Compression tanks shall be furnished complete with steel supporting saddles.

7. PUMPS:

7.1 Hot Water Heating Circulating Pumps: Shall conform to MIL-P-17552, Type I, Style 3, Class 1, and shall be centrifugal close couple type equipped with mechanical type seals. Pumps shall be selected so that the operating point on the selected impeller-curve will lie at or to the left (shut-off side) of, and not more than 5 percent below, the point of maximum efficiency for the impeller. Selected catalog data submitted for approval shall include pump speed and characteristic curve for performance of impeller selected for each pump. Curves shall indicate capacity vs. head, efficiency, and brake horsepower for full range, from shut-off to free delivery. Motors shall be standard NEMA Class B design induction type motors.

7.2 Chilled Water Circulating Pumps: Shall conform to MIL-P-17552, Type I, Style 1, Class 1, and shall be centrifugal, horizontal, double suction, single stage. Pump casing shall be cast iron for not less than 175 psig design working pressure, suction and discharge drilled and tapped for pressure gauges and drains. Upper half of casing shall have priming and vent connections with vent cock and liftings lugs. Pump shall have double suction, enclosed, accurately machined and finished bronze impeller, renewable bronze casing and impeller wearing rings, carbon steel shaft, bronze or stainless steel shaft sleeves extending through stuffing boxes with positive shaft seals, deep stuffing boxes with teflon asbestos packing rings and locking type renewable throat bushing, oil lubricated ball bearings with constant lever oiler and slight gauge, all steel flexible coupling, coupling guard, bed plate continuous under pump and motor with drip lip, tapped drain and grout hole. Pumps shall be designed for normal operating suction pressure as scheduled. Motors shall be standard NEMA Class B design induction motors. Pumps shall be selected so that the operating point on the selected impeller-curve will lie at or to the left (shut-off side) of, and not more than 5 percent below, the point of maximum efficiency for the impeller. Selected catalog data submitted for approval shall include pump speed and characteristic curve for performance

7.2 Chilled Water Circulating Pumps: In the 14th line change the word "suction" to "discharge".

of impeller selected for each pump. Curves shall indicate capacity vs. head, efficiency, and brake horsepower for full range, from shut-off to free delivery.

7.3 Heat Recovery Pumps: Shall be same as hot water in-line pumps suitable for circulating water between 35 degrees F. and 200 degrees F.

7.4 Pump Control for Hot Water Heating and Chilled Water Systems as specified in section "Automatic Temperature and Humidity Control System".

7.5 Chilled and Hot Water System - Back Pressure Relief Valves:

7.5.1 Valves shall be of sizes and capacities as indicated. Valves shall maintain constant upstream pressure by by-pass or relieving excess pressure and shall maintain pressure setttings indicated with 3 psig without causing surges.

7.5.2 Valves shall be of the hydraulically-operated, pilot-controlled, diaphragm type, and shall have a single removable seat and resilient disc. No external packing glands shall be permitted, and the diaphragm shall not be used as a seating surface. The pilot control shall be a direct-acting, adjustable, spring-loaded, diaphragm valve, designed to permit flow when controlling pressure exceeds spring setting. The pilot control system shall operate such that as excess line pressure is dissipated the main valve shall gradually close to a positive, drip-tight seating.

7.5.3 Valves shall have cast iron body and cover conforming to ASTM A48 with 125 pound Class ANSI B16.1 flanged end connections. Valves cold water (100°F.) working pressure rating shall be 175 psig. Valves trim shall be brass conforming to QQ-B-626 and bronze conforming to ASTM B61.

7.5.4 Valves pilot control system shall be cast bronze conforming to ASTM B62 with ASTM 303 stainless steel trim.

7.6 Hot Water In-Line Pump:

7.6.1 Pumps.....In the last line change "or" to "for".

7.6.1 Pumps shall be electric motor driven, centrifugal, with in-line connections to permit unsupported installation in a straight run of piping. Units shall conform to MIL Spec. MIL-P-16077, with grease lubricated ball or roller bearings, or capacities indicated.

7.7 Flexible Pipe Connections shall be provided on suction and discharge piping as shown on the drawings and sized to allow for vibrational displacement of equipment.

7.7.1 Flexible Metal Hose: Shall be grade E phosphur bronze, monel or stainless steel corrugated tube covered with comparable bronze or stainless steel braid restraining and pressure cover. Stainless steel grades shall be 304, 316 or 321 as required for application. Minimum live lengths of flexible hose shall be as listed in ASHRAE Guide, but not less than that recommended by

manufacturer for continuous vibration application. Hose shall be provided with steel restraints or control rods to limit the amount of elongation.

7.7.2 Reinforced Teflon Pressure Carrier: Molded Teflon (TFE) per ASTM D1457, Type III, Bellows reinforced with Monel reinforcing rings and having factory installed ASA flange type metal end fittings. All surfaces coming in contact with fluid must be chemically compatible with fluid served. Hose shall be provided with steel restraints or control rods to limit the amount of elongation.

8. RADIATION UNITS:

8.1 Fin Tube Radiation Units: Copper tube and aluminum fin type shall conform to MIL-R-17772, as modified, and shall be of size, style, and capacity not less than that indicated on the drawings. All radiation shall be complete with heating elements, and accessories as shown on the drawings. Radiation (except bare fin installations) enclosure detail, and mounting supports and accessories as shown on the drawings.

8.1.1 Hot water radiation capacities shall be based on 65 degrees F. entering air, entering water as scheduled, IBR code rated. The schedule capacities shall be compensated for actual water velocities in the tube or pipe and actual mounting heights.

8.1.2 All radiation shall be equipped with a shut-off valve in the supply line, and a balancing cock in the return line of hot water elements. The valves shall be installed so that they are operable through the bottom of the enclosure, without removing the enclosure itself. Eccentric reducers and pitch shall be used wherever necessary to ensure proper venting of air from the heating element and piping into the return riser.

8.1.3 For series installations, piping interconnections between elements shall be full pipe or tube size unless shown otherwise.

9. HEATING AND VENTILATING UNITS: Heating and ventilating units shall be as specified in section entitled "Air Supply Systems".

10. FACTORY FABRICATED AIR HANDLING UNIT: Factory fabricated air handling unit shall be as specified in section entitled "Air Supply Systems".

11. CABINET UNIT HEATERS: Cabinet unit heaters shall conform to MIL-U-17691, Type II, Class 2, two speed, direct drive centrifugal fan style. Capacity based on 200 degrees F. entering hot water, 20 degrees f. water tmeperature drop and enclosure style shall be as shown on the drawings.

11.1 Sound ratings shall be in accordance with Plate VI of sound measurement test code, Bulletin 13, first edition, as adopted by unit heater division of AMCA.

8.1.1 Hot water radiation capacities.....In the first line change "65 degrees F." to "68 degrees F.".

11.2 Control of equipment shall be provided as specified in section entitled "Automatic Temperature and Humdity Control System".

11.3 Construction: Front panels of ceiling mounted units shall be hinged. Discharge and recirculating grilles of units with cabinet enclosure shall be stamped directly into the casing. Filters of the fiber glass disposable type shall be provided ahead of heating coils and fan inlet. Unit motors shall be open type suitable for 120 volt, 60 hertz, single-phase electrical service, and shall have built in thermal overload protection and permranently lubricated bearings.

11.4 Cabinet Unit Heater Types:

11.4.1 Type 1: Horizontal cabinet, fully recessed in ceiling construction, bottom front grille air inlet, bottom front grille air discharge.

11.5 Unit Heaters: Unit heaters shall be propeller fan type with horizontal or vertical air delivery. Capacity shall be as indicated on the drawings.

12. INSTALLATION: All materials and equipment shall be worked into a complete, convenient, and economical system or systems; and all apparatus, parts, materials, and accessories which are necessary to accomplish ths result shall be furnished and worked into place.

12.1 Piping: Unless specifically stated to the contrary, fabrication, assembly, welding, soldering, and brazing shall conform to ANSI B31.1 for all piping of the hot water system. All piping shall follow the general arrangement shown, shall be cut accurately to measurements established for the work by the contractor, and shall be worked into place without springing or forcing, except where cold-spring is specified. All piping and equipment within buildings shall be entirely out of the way of lighting fixtures and doors, windows, and other openings. Overhead piping in buildings shall be run in the most inconspicuous positions. Adequate clearances shall be provided from walls, ceilings, and floors to permit the welding of joints at least 6 inches for pipe sized 4 inches and less, 10 inches for pipe sizes over 4 inches, and in corners sufficient clearance to permit the welder to work between the pipe and one wall shall be provided. Provision for expansion and contraction of pipe lines shall be made. Changes in size of water lines shall be made with reducing fittings. Piping shall not be buried, concealed, or insulated until it has been inspected, tested, and approved. Materials and equipment shall be protected from the weather. Where pipe passes through building structure, pipe joints shall not be concealed, but shall be located where they may be readily inspected. All pipe to be insualted shall be run as shown and as required with sufficient clearance to permit application of insulation. Flanged joints shall be used only where necessary for normal maintenance and where required to match valves and equipment. All gaskets, packing, and thread compounds shall be suitable for the service. Long radius ells shall be used wherever possible to reduce pressure drops. Pipe bends in lieu of welding fittings may be used where space permits. Pipe bends shall

have a uniform radius of at least five times the pipe diameter and must be free from any appreciable flattening, wrinkling, or thinning of the pipe. Mitering of pipe to form elbows, notching straight runs to form full sized tees, or any simlar construction shall not be used. All branch connections shall be made with welding tees except factory made forged welding branch outlets or nozzles having integral reinforcements conforming to ANSI B31.1 may be used, provided the nominal diameter of the branch does not exceed one pipe size less than the nominal diameter of the run. All piping shall be run essentially as indicated, care being taken to avoid interference with other piping, conduit, or equipment. Except where specifically shown otherwise, vertical piping shall run plumb and straight and parallel to walls. Tapping of lines shall not be permitted except otherwise indicated. Sleeves of suitable size shall be provided for all lines passing through building structure. Piping connected to equipment shall be installed to provide flexibility for thermal stresses and for vibration, and shall be adequately supported and anchored so that strain from weight and thermal movement of piping is not imposed on the equipment. Each section of pipe, fitting, and valves shall be thoroughly cleaned and positively free of all foreign matter before erection. Prior to erection, each piece of pipe shall be held in an inclined position and thoroughly tapped to loosen scale and foreign matter. Each pipe shall be swabbed immediately prior to erection. Open ends of mains shall be plugged or capped during all shutdown periods. Lines shall not be plugged or capped during all shutdown periods. Lines shall not be left open at any place where any foreign matter might accidentally enter pipe.

12.1.1 Welding:

12.1.1.1 Welding Procedure Specifications: Before any welding is performed, the contractor shall submitt to the Contracting Officer three (3) copies of his welding procedure specification for all metals included in te work, together with proof of its qualification as outliend in ANSI B3.1.1.

12.1.1.2 Performance Qualification Record: Before any welder or operator shall perform any welding the contractor shall also submit to the Contracting Officer three (3) copies of the Welder's Performance Qualifications Record in conformance with ANSI B3.1. showing that the welder was tested under the approved procedure specification submitted by the contractor. In addition the contractor shall also submit each welder's assigned number, letter, or symbol which shall be used to identify the work of the welder which shall be affixed immediately upon completion of the weld. Welders making defective welds after passing a qualification test shall be given a requalification test and upon failing to pass the test shall not be permitted to work this contract.

12.1.1.3 Previous Qualifications: Welding procedures, welders, and welding operators previously qualified by test may be accepted for this contract without requalification subject to the approval of the Contracting Officer and provided that all the conditions specified in ANSI B31.1 are met before a procedure can be used.

12.1.2 Brazing and Soldering:

12.1.2.1 Brazing and brazing procedure qualifications shall conform to ANSI B31.1. Brazing procedure for joints shall be as outlined in the Copper Tube Handbook, Published by the Copper Development Association.

12.1.2.2 Soldering, soldering preparation and procedures for joints shall be in accorrdance with ANSI B31.1 and as outlined in the copper Tube Handbook published by the Copper Development Association.

12.1.3 Hangers and Supports: Shall conform to section entitled "Supports and Sleeves".

12.1.4 Grading of Pipe Lines: Unless otherwise indicated, horizontal lines of hot water piping shall be installed to grade up in the direction of flow with a pitch of not less than one inch in 40 feet, except in loop mains and main headers where the flow may be in either direction.

12.1.5 Flashing for Buildings: Where pipes pass through buildings outside walls, proper flashing shall be provided and shall be made tight and waterproof as indicated on the drawing.

12.1.6 Unions and Flanges: Unions or flanges shall be placed where necessary to permit easy disconnection of piping and apparatus and as indicated. Each connection having a screwed-end valve shall have a union. Unions or flanges shall be placed as indicated. Unions shall be used on piping under 2-1/2 inches in diameter, and flanges shall be used on piping 2-1/2 inches and over in diameter. Dielectric unions or flanges shall be installed between ferrous and non-ferrous piping, equipment, and fittings; where indicated; and where specified as required to electrically isolate underground cathodic protected portions of the system from the remainder of the system; except that bronze valves and fittings may be used without dielectric couplings for ferrous-to-ferrous or non-ferrous-to-non-ferrous connections. Dielectric fittings shall utilize a non-metallic filler which will prevent current flow from exceeding 1 percent of the short circuit current. The spacer shall be suitable for the pressure and temperature of the service. The fittings shall otherwise conform to the requirements specified herein.

12.1.7 Connections for Future Equipment: Capped or plug outlets for connections to future equipment shall be located as indicated.

12.1.8 Changes in Pipe Size: Reducing fittings shall be used for changes in pipe size; the use of bushings will not be permitted. In horizontal lines, reducing fittings shall be of the eccentric type to maintain the top of the lines in the same plane.

12.1.9 Cleaning of Piping: Before being placed in position, the inside of all black steel and wrought iron pipe shall be cleaned by rapping along its

full length to loosen sand, mill scale, and other foreign matter; pipe 2 inches and larger shall have a wire brush of a diameter larger than that of the inside of the pipe drawn through its entire length several times. Before final connections are made to apparatus, the interior of all piping shall be washed out thoroughly with water.

12.2 Valves:

12.2.1 General: Valves shall be installed in conformance with ANSI B31.1, ASME Boiler and Pressure Vessel Code, Section IV, and as required herein at the locations indicated and elsewhere as required for the proper functioning of the system as directed. All valves shall be installed with stems horizontal or above. Shutoff valves shall be so located or equipped to permit operation from floor level, or provided with safe access in the form of remote operators walkways or ladders. Valves shall be installed in positions accessible for operations and repair.

12.2.2 Globes Valves: Globe valves shall be installed so that the liquid flow pressure shall be below the disc.

12.3 Pressure Gages: Pressure gages shall have a shutoff valve or petcock installed between the gage and the line.

12.4 Thermometers: Thermometers and thermal sensing elements of control valves, etc., shall be provided with a separable socket. Separable sockets installed in pipe lines shall be installed such a manner to sense the flowing temperature of the fluid and minimize obstruction to flow.

12.5 Equipment Installation: Equipment installation shall be strictly in accordance with these specifications, and the installation instructions of the manufacturers. All piping shall be installed in such a manner as not to place strain on any of the equipment. Flanged joints shall not be bolted tight unless they match adequately. Expansion bends shall be adequately extended before installation. All piping shall be graded, anchored, guided and supported, without low pockets.

12.6 Cleaning of System: As installations of the various systems components are completed, they shall be adequately cleaned before final closing. All foreign matter shall be removed from equipment and surrounding areas. Preliminary or final tests will not be permitted until cleaning is approved by the Contracting Officer.

12.7 Identification of Piping: All piping shall be identified in accordance with OSHA Standards, except that labels or tapes may be used in lieu of painting and stencilling. Spacing of identification marking of runs shall not exceed 50 feet. Material requirements for labels and tapes shall conform to PPP-T-66, and shall be general purpose type and colored glass.

12.8 Identification Tags and Plates: All equipment, gages, thermometers, and controllers shall be provided with tags numbered and stamped for

"12.9 Access panels shall be provided in this section as required for access to concealed shut-off valves and control valves. Provide as specified in the section entitled "Plumbing".

their use. Plates and tags shall be of brass or laminated plastic material for building interiors and shall be securely mounted or attached.

13. WATER TREATMENT:

13.1 For treating Hot Water Heating and Chilled Water Systems and Radiation systems, provide all chemical feed equipment including by-pass type chemical feeders, valves, fittings, piping, supports, etc. which are required for convenient and proper introduction of chemicals to the systems.

13.1.1 Chemical analysis and chemicals required for proper treatment will be provided by the Government.

14. FIELD TEST AND INSPECTIONS: All field inspections, field tests, and trial operations specified in this section shall be performed. The contractor shall provide all labor, equipment and incidentals required of the testing, except that the Government will provide electric power or water required for the tests. The Contracting Officer will witness all field tests and trial operations specified in this section. The Contractor shall give the Contracting Officer ample notice of the dates and times scheduled for tests and trial operations which require the presence of the Contracting Officer.

14.1 Field Inspections: Prior to initial operation, the piping system shall be examined and inspected by the Contracting Officer for conformance to plans, specifications, and ANSI B31.1. All equipment, material, or work rejected because of defects or non-conformance with plans, specifications, and ANSI B31.1 shall be replaced or corrected by the contractor as directed by the Contracting Officer.

14.2 Field Test: After completion of the piping installation and prior to initial operation, tests shall be conducted.

14.2.1 Piping System: Piping system shall be hydrostatically tested. Tests shall be conducted in accordance with the requirements of ANSI B31.1 and as follows: The piping system shall be tested after the lines have been cleaned as hereinbefore specified and before any insulation covering has been applied. Piping systems shall be tested at a pressure of one and one-half times the design working pressure, and in no case less than 50 psig. All piping shall be hydrostatically tested using water not exceeding 100 degrees F. In all tets, gages, traps, and other apparatus which may be damaged by the test pressure shall be removed or valved off from the system before the tests are made. A calibrated test pressure gage shall be installed in the system to observe any loss in pressure. The required test pressure shall be maintained for a sufficient length of time to enable an inspection to be made of all joints and connections. Defects disclosed by the test shall be corrected by the Contractor at no cost to the Government. Test after installation and prior to acceptance shall be performed in the presence of a representative of the Contracting Officer and subject to his approval.

14.1 Field Inspections: Omit the period at the end of the last line and add "at no cost to the Government.".

14.2.2 Equipment and Material: Equipment and material certified as having been successfuly tested by the manufacturer in accordance with referenced specifications and standards will not require retesting before installation. Equipment and materials not tested at the place of manufacturer will be tested before or after final installation, as applicable, where necessary to determine compliance with referenced specifications and standards.

14.2.3 Startup and Operational Test: The system shall be started up and initially operated with all components operating. During this time, the various strainers shall be periodically cleaned until no further accumulation of foreign material occurs. Care shall be exercised so that minimum loss of water occurs when strainers are cleaned. Safety and automatic control instruments shall be adjusted as neceessary to place them in proper operation and sequence.

14.2.4 Extent of Field Tests: After installation and before acceptance, the work of this section shall be subjected to all necessary field tests, including those herein specified, and in section entitled "Testing and Balancing Air and Water Systems".

---END---

SECTION 15721. SOLAR DOMESTIC HOT WATER GENERATING SYSTEM

1. APPLICABLE PUBLICATIONS: The following publications of the issues listed below, but referred to thereafter by basic designation only, form a part of this specification to the extent indicated by the references thereto (where a number is suffixed to the publication number, it denotes the effective amendment to the publication):

1.1 Federal Specifications:

GG-G-76D	Gages, pressure and vacuum, dial indicating.
HH-I-523C	Insulation block and pipe covering, thermal (calcium silicate).
HH-I-558B & Am 3	Insulation; blocks, boards, blankets, felts, sleeving (pipe and tube covering), and pipe fitting covering; thermal (mineral fiber, industrial type).
WW-H-171D	Hangers and supports, pipe.
WW-V-SIF	Valves, bronze; angle, check and globe (125, 150 and 200 p ound; threaded, flanged and solder).
WW-V-54D & Am 3	Valves, bronze, gate (125, 150 and 200 pound; threaded, flanged and solder).
WW-V-58B	Valves, gate, cast-iron, threaded and flanged.
DD-G-1403B & Am 1	Glass, plate (float), sheet, figured, and spandrel (heat strengthened and fully tempered).

1.2 Military Specifications:

MIL-T-12295D	Tanks, hot-water storage.
MIL-V-13612D	Valves, relief, pressure and temperature (for hot water).
MIL-P-16077A	Pump, centrifugal, water circulating, electric-motor driven.
MIL-S-16293F	Strainers, sediment, pipeline.
MIL-V-18433B	Valves, temperature regulating (thermostatically controlled).
MIL-V-18436C	Valves, check; bronze, cast-iron and steel body.
MIL-V-18826B	Valves, globe and angle, cast iron.
MIL-T-19646	Thermometer, distant-reading, indicating dial.
MIL-M-18221B	Meters, flow rate indicating.
MIL-P-21035 & Am 1	Paint, high zinc dust content, galvanizing repair.

1.3 American National Standards Institute (ANSI):

B16.5-73	Steel pipe flanges, flanged valves and fittings.
B16.18-73	Cast-bronze solder joint pressure fittings.
B16.22-73	Wrought copper and bronze solder-joint pressure fittings.
B31.1-77	Power piping.

1.4 American Society for Testing and Materials (ASTM):

B88-76	Seamless copper water tube.
B198.1-77	Methods of Testing to deterine the Thermal Performance of Solar Collectors.
B199.1-77	Methods of Testing Thermal Storage Devices Based on Thermal Performance.
E84-77	Surface burning characteristics of building materials.
B75-77	Seamless copper tube.
B152-74	Copper-sheet, strip, plate, and rolled bar.
D1693-70	Environmental stress-cracking of ethylene plastics.

1.5 American Water Works Association (AWWA):

C601-68	Disinfecting water mains.

1.6 National Bureau of Standards:

NBSIR-74-635	Method of Testing for Rating Solar Collectors Based on Thermal Performance.

1.7 Southern Building Code Congress:

1975(76)(77)	Standard Plumbing Code.

1.8 Standards of Tubular Exchanger Manufacturer Association (TEMA):

2. GENERAL REQUIREMENTS: Section entitled "General Requirements, Mechanical", applies to this section, except as otherwise specified. The work includes providing a solar water heating system and related work, complete and ready for operation. Piping shall be run concealed except where indicated otherwise. Piping shall be inspected, tested and approved before being covered or concealed. Piping installation and workmanship shall be in accordance with the Standard Plumbing Code (SPC), except as specified or indicated otherwise; the permissive provisions shall be considered to be mandatory as though the word "shall" had been substituted for the word "may" wherever it appears, and reference to the "plumbing official" and the "design engineer" shall be interpreted to mean the Contracting Officer. Capacity of equipment shall be not less than that indicated. System shall be connected to building service piping as shown on the drawings.

3. SUBMITTALS:

3.1 SUBMITTALS REQUIRED: Shop drawings, manufacturer's data and certificates for equipment, materials finish, and pertinent details for each system shall be submitted and approved before procurement, fabrication or delivery of such items to the job site. Partial submission will not be acceptable. Descriptive data shall be annotated to show the specific model, type and size of each item the Contractor proposes to furnish. The submittal

requirements of section entitled, "General Requirements, mechanical", applies to the following lists. Items in the following lists (which are followed by (CO) shall be approved by the Contracting Officer.

3.1.1 Manufacturer's Data:

(a) Solar Collectors (CO)
(b) Tanks (CO)
(c) Specialties (CO)
(d) Pipe and fittings
(e) Heat Exchangers (CO)
(f) Pumps (CO)
(g) Controls (CO)

3.2 Certificates: Submit certificates from the manufacturer attesting that each of the following items conform to all requirements of this specification and of reference publications.

(a) Pipe and fittings
(b) Tanks (CO)
(c) Solar Collectors (CO)
(d) Heat Exchangers (CO)
(e) Pumps (CO)
(f) Controls (CO)

3.3 Manufacturer's Recommendations: Where installation procedures or any part thereof are required to be in accordance with the recommendations of the manufacturer of the material being installed, printed copies of these recommendations shall be furnished to the Contracting Officer prior to installation. Installation of the item will not be allowed to proceed until the recommendations are received. Failure to furnish these recommendations can be cause for rejection of the material.

4. SOLAR COLLECTOR & HEAT EXCHANGER PIPING: Dielectric unions shall be provided at all connections between ferrous and nonferrous piping or metals. Flanges or unions shall be provided at valves, strainers and piping connections to each piece of equipment.

4.1 Above Ground Piping: Pipe shall conform to ASTM B88, Type K or L, hard drawn copper. Fittings shall conform to ANSI B16.18 or ANSI B16.22; adaptors shall be provided as required. Solder shall be 50-50 lead-tin solder. Solder joints made between header and collector shall be 95-5 tin-antimony.

4.2 Gate Valves shall conform to WW-V-54, Class A, except valves 2-1/2 inches and larger shall conform to WW-V-58, Class 1.

4.2.1 Globe Valves shall conform to WW-V-51, except valves 2-1/2 inches and larger shall conform to MIL-V-18826, Class 125.

4.2.2 Check Valves shall conform to WW-V-51, Class A, Type IV, except valves 2-1/2 inches and larger shall conform to MIL-V-18436, Class 125, Type III, Group A or B.

4.2.3 Water Pressure and Temperature Relief Valves with test lever shall conform to MIL-V-13612, Type I, and shall have relieving capacity as indicated on drawings.

4.2.4 Butterfly Valves shall conform to WW-V-1967, Type B, Style 1 or 2 and may be used in lieu of gate and globe valves for sizes 2 inches and larger.

4.3 Strainers shall conform to MIL-S-16293, Class 125, Style Y and shall have blow off valves with pipe nipple and gate valve.

4.4 Gages shall conform to GG-G-76, Class 1, Style X, Type I, with a 4-1/2-inch dial, brass or aluminum case, bronze tube. Scale range shall be as shown on the drawings.

4.5 Water Temperature Regulating Valves shall conform to MIL-V-18433, Type I, Style B, Class 3.

4.6 Flexible Pipe Connectors: Flexible bronze pipe connectors with single braid shall be provided for connection to collectors and shall be suitable for the intended service.

4.7 Temperature indicators shall conform to GG-T-321. Ranges shall be as indicated.

5. Supports, hangers, anchors, sleaves, and plates shall conform to Section entitled "Supports and Sleeves".

6. HOT WATER STORAGE TANK: Storage tanks shall conform to MIL-T-12295, Type II or IV, Class 3, Style A, except as indicated otherwise. Interior lining shall be suitable for potable water at 200°F. Storage tanks shall be charged with 140° water at start-up.

7. HEAT EXCHANGERS: Heat exchangers shall be "straight" or "U tube", shell and tube type of a size as indicated on the drawings. The exchangers shall be designed in accordance with the ASME Code for Unfired Pressure Vessels for a working pressure of 100 PSIG, and be so stamped. Heat exchanger surface shall include an allowance for .0005 fouling factor for inside and outside of tubes. Shell length shall be limited to that which will permit tube pulling within the space allocated. The exchangers shall have carbon steel shells with copper tubes.

8. IN-LINE PUMPS: Shall be single stage, vertical or horizontal split case design, in cast iron, bronze fitted or all bronze construction as indicated on the drawings. The pump internals shall be capable of being serviced without disturbing piping connections.

1. The impeller shall be of the enclosed type, hydraulically and dynamically balanced and keyed to the shaft and secured with a suitable locknut.

2. The pump shall employ a mechanical seal and shaft sleeve shall be furnished under the complete wetted area of the mechanical seal.

3. The bearing frame assembly of the pump shall be fitted with oil lubricated, bronze journal bearings and a hardened alloy steel shaft.

4. A flexible coupling, capable of absorbing torsional vibration, shall be employed between the pump and motor.

5. The motor shall be resilient mounted, equipped with oil lubricated journal bearings.

9. COMPRESSION TANKS: Shall be of black steel construction, be rust proof coated both inside and outside, be designed for 125 psig working pressure, conform to ASME Code for Unfired Pressure Vessels, and be stamped. Install in accordance with manufacturer's recommendations. Capacities shall be as indicated on drawings.

9.1 COMPRESSION Tanks shall be equipped with gauge glass, high and low level alarm switches, air control tank fitting, and vent tube or drain tappings. Provide two saddle supports for each suspended tank.

9.2 Provide gauge glass having protection guard, and two angle valves. Provide tapped openings for furnished drain valve, tank fitting and vent valve (bottom) and plugged vent, charging, or cleaning connection (top).

10. HYDRONIC AIR CONTROL SYSTEM: Shall be installed in accordance with manufacturer's recommendations. Capacities shall be as indicated on drawings.

10.1 Air Separator: Shall have tangential inlet and outlet connections, an internal perforated stainless steel air collector tube designed to direct released air into expansion tank, a blow-down connection with gate valve on bottom of unit; shall be constructed for 125 psig working pressure conforming to ASME Code for Unfired Pressure Vessels, and be stamped.

10.2 Air Control Tank Fitting: Shall be installed in expansion tank to facilitate air transfer from air separator into tank while restricting gravity circulation and tank temperature. Fitting shall include an integral or separate vent tube to establish an initial water level in tank.

10.3 Tank Drainer-Air Charger: Shall incorporate a vent tube and drain valve with hose connection for installation in bottom of expansion tank to facilitate draining tank.

10.4 Pressure Reducing Valve (Water): Shall be diaphragm operated, spring loaded type with a separate, easily cleanable, in-line strainer and a separate in-line check valve or may be type that has built-in strainer of the easily removable type without system shut-down and an antisyphon check valve.

10.4.1 Operation: Shall be designed for 125 psi maximum working pressure and shall withstand 225 degrees F. minimum operating temperature; shall have a minimum adjustable range of 4 psi above and below set point.

10.4.2 Materials: Body of valve shall be bronze, brass or iron. Working parts of valve shall be bronze, brass or stainless steel. Minimum valve size shall be 3/4 inch.

10.4.3 Provide a gate valve and union on both inlet and outlet connections and a full size bypass with a globe valve and union.

10.4.4 Provide a 4-1/2 inch diameter pressure gage, Fed. Spec. GG-G-76, Class 1, Style A, Type 1, in low pressure side of make-up water line to show outlet pressure. Range of gage shall be 1-1/2 time PRV fill pressure.

10.5 Pressure Relief Valve: Shall comply with applicable sections of ASME Code for Power Boilers and Unfired Pressure Vessels, and bear ASME stamp; shall be fully automatic with testing lever. Valve shall be set to relieve at pressure indicated. Pipe discharge to floor as indicated or as directed.

10.6 Air Vents: Manual air vents shall be provided at each high point in hydronic system, and as otherwise indicated, and shall incorporate a 1/4 inch brass gate valve with a 1/4 inch copper tubing discharge line from vent to nearest drain pan, floor drain, drain line, or where directed.

11. ELECTRICAL:

11.1 Electrical Work is specified in the section entitled "Interior Electrical Systems"

"12x. SOLAR COLLECTORS: Collectors shall be flat plate type and shall include casing, glazing, absorber panels, water passes, insulation and sensors. Each solar collector panel shall be shipped to the job site complete and ready for installation, except glazing may be installed at the job site. The glazing shall be provided with a non-transparent protective cover, which shall remain in place until solar domestic hot water system is in operation. All collectors shall be the cataloged products of a single manufacturer. Solar collectors shall be designed to withstand without permanent deformation 100 MPH wind. 12.1 The absorber plate shall be constructed of copper sheet conforming to ASTM B152 with ASTM B88, Type L or K, copper tubes or with water passages integrally formed from the absorber copper sheets. The fluid transfer tubes must be designed and manufactured to withstand a working pressure of 100 pounds per square inch gauge at a working temperature of 200 degrees Fahrenheit. The fluid transfer tubes shall permit the collectors to drain by gravity. All collectors must withstand a 350 degree Fahrenheit dead-end temperature for 8 hours out of 24 hours on clear days during summer months.

SECTION 15721. SOLAR DOMESTIC HOT WATER GENERATING SYSTEM

12. FLAT PLATE SOLAR COLLECTOR: Delete this paragraph in its entirety and substitute the following therefor:

The absorber plate shall be coated with black chrome selective coating having a minimum average hemispherical absorptivity of 0.95 for the air mass 2 solar

12x.1 Casing: Casing, including sides, bottom panels, and attachments for support connections, shall be constructed of copper, aluminum, or galvanized steel; aluminum sheets and galvanized steel sheets shall have a baked enamel finish. Dielectric isolation materials shall be provided between ferrous and non-ferrous metals to prevent electrolytic action. Cover shall be secured in place by the installation of a suitable frame. Unit shall be assembled with stainless steel or aluminum screws or rivets. The casing shall be structurally capable of being supported at the top and bottom only and shall require no side support structure whatsoever. In the horizontal position casing must be able to support a dead load of 20 pounds per square foot.

12x.2 Glazing: Fed. Spec. DD-G-1403, Kind FT, Condition A, Type I, Class I transparent tempered glass, minimum of 0.12 inch thick. Glazing shall be easily removable for repair and maintenance of collector plate without disturbing the water connections or using special tools. The panel shall be designed and manufactured to eliminate reduction of insolation transmission due to moisture. Glass shall be sealed with polysulfide, or polyurethane prepolymer gaskets or equivalent silicone seal to withstand a temperature of 400 degrees Fahrenheit.

12x.3 Absorber Panels: The absorber panel shall be constructed of copper sheets conforming to ASTM B152, or aluminum sheets, with ASTM B88, Type K or L, copper tubes; or with water passages integrally formed from the absorber copper sheets. Absorber panels shall have a nonselective coating with a minimum absorptivity of 0.95 or a selective coating with a minimum absorptivity of 0.85 and a maximum emissivity of 0.35. The fluid transfer tubes and water passages shall be designed and manufactured to withstand a working pressure of 100 pounds per square inch gage at a working temperature of 200 degrees Fahrenheit. The fluid transfer tubes shall permit the collector to drain by gravity and tubes shall have inlet and outlet headers running the width, i.e., the short length of the collector. Inlet and outlet headers shall be located at the top and bottom. Inlet and outlet headers and all header connections shall have a minimum flow area equal to that of 0.5 inch copper tube, ASTM B88, Type K. Collectors which have inlet and outlet connections out of the back of the collector are not acceptable.

12x.4 Insulation: Insulation shall be vapor sealed and provided with all weather protection. If any outgassing from the insulation occurs on the inside of the glazing cover, the Contractor shall remove, clean, and replace the glazing cover.

12x.5 Thermocouples: Provide thermocouples on the solar collector absorber plate as indicated on drawings. Thermocouple shall be type "T" copper-constantan and shall be soldered to the absorber plate surface at the

any change proposed by Contractor shall b submitted to the Contracting Officer for approval prior to equipment and material procurement and installation. Solar collectors shall be installed with proper thermal expansion clearances between collectors in accordance with the printed recommendations of the solar collector manufacturer."

accordance with National Bureau of Standards Number NBSIR-74-635 "Method of Testing for Rating Solar Collectors Based on Thermal Performance. The collector panel shall absorb and convert solar energy into heat at an efficiency equal to or greater than that defined by a straight line passing through 60 percent efficiency at a x coordinate of 0.2 and 40 percent efficiency at a x coordinate of 0.5, based on collector aperture area. The x coordinate shall be defined as the average collector temperature minus ambient temperature divided by insolation. Copies of the plotted area for collector efficiency shall be submitted to the Contracting Officer for approval.

12.7 Thermocouples: Provide thermocouples on the solar collector absorber plate as indicated on drawings. Thermocouple shall be type "T" copper-constantan and shall be soldered to the absorber plate surface at the factory. The thermocouples shall be sheathed and with wire leads extending to weather proof connection leads mounted on outside of solar collectors. Connection lead shall be mounted so as not to interfere with solar collector mounting arrangement, and provide access for installation of thermocouple extension wires.

12.8 Guarantee and Warranty: Each solar domestic water system including solar collector panels and hot water storage tanks shall be guaranteed against defective materials, workmanship and design, for a period of five years from the date of final acceptance of the project by the Government. Upon receipt of notice from the Government of failure of any part of the guaranteed equipment during the warranty period, the affected part or parts or equipment shall be replaced promptly with new parts or equipment by and at the expense of the Contractor.

13. GLYCOL-WATER MAKE-UP SYSTEM:

13.1 Glycol-Water storage tank shall be black steel or polyethylene, minimum 100 mil thickness, with removable cover. Capacity shall be 50 gallons, with approximate diameter of 23 inches and height of 36 inches. Reinforced threaded pipe connections shall be provided for all connections.

13.2 Glycol-Water make-up pump shall be a bronze fitted, self-priming, high head type suitable for pumping a 33% to 50% glycol-water solution in intermittent service. The pump shall be provided with a mechanical shaft seal and be flange connected to a 1750 rpm NEMA type C motor, 120/1/60. The pump may be a "gear-within-a-gear" positive displacement type with built-in relief valve set for design head of the pump.

14. INSTALLATION: No equipment except supply and return piping connections shall be attached to or mounted on solar collectors except with the express written consent of the manufacturer. Frames, angles, brackets and fasteners of aluminum or hot dipped galvanized steel used to attach collectors to structure shall be furnished by installer. If galvanized steel is used, unprotected edges, holes, etc., shall be field coated with Cold Galvanizing Compound. Submit galvanized steel samples with published test data showing conformance with MIL-P-21035 to withstand 3,000 hour salt spray test and

15. TEMPERATURE CONTROL SYSTEMS: Delete the first sentence in its entirety and substitute the following therefor: "Provide a complete system of pneumatic, and pneumatic-electric, or electric or electronic temperature controls ready for operation. In the last sentence change the word "Field" to "Interface". At the end of this paragraph add the following: "Sensors and controls provided for generation of values from analog points for EMCS shall be electronic type. Pneumatic type will not be permitted. The subject analog points are specified on the table entitled "Input/Output Summary Sheets" in the EMCS section specified hereinbefore."

15. TEMPERATURE CONTROL SYSTEMS: Provide a complete system of pneumatic and pneumatic- electric temperature controls ready for operation. Installation shall be made by or under the direct supervision of competent mechanics employed by the manufacturer of the controls. The automatic temperature control system shall include control diagrams, labor, control devices, control wiring, pneumatic tubing, and miscellaneous material necessary for a complete system to function as described in the Sequence of Operation shown on the drawings. Automatic temperature controls shall be provided for each system. All controls shall be suitable for interface with the FID as specified in section entitled "Energy Monitoring and Control System (EMCS) Field Materials".

15.1 Water temperature sensor shall be type "T" copper-constantan thermocouple, with brass wells.

15.2 Water flow meter/transmitter shall conform to MIL-M-18221, type II, Style E, with transmitter suitable for interface with the EMCS.

15.3 Steam flow transmitter shall conform to MIL-M-18221, type I, Style C. Transmitter shall produce a milliamp output signal suitable for interface with the EMCS.

15.4 Water flow control valves shall be three-way, on-off, diverting type designed for 150 psig working pressure of a size shown on the drawings. Materials of construction shall be compatible with the service liquid.

16. SERVICE AND GUARANTEE:

16.1 Control System Adjustment: Temperature control manufacturer's representative, after completion of the installation, shall check and adjust all controls specified under this section of the specifications and shall place them in complete operating condition.

16.2 Control systems shall be free from defects in workmanship and material under normal use and service. If within twelve months from the date of acceptance by the Contracting Officer any of the automatic temperature control equipment is proved to be defective in workmanship or material, it shall be adjusted, repaired or replaced by the Contractor at his own expense.

17. INSTRUCTING OPERATING PERSONNEL: Upon completion of the work and at a time designated by the Contracting Officer, the services of a competent engineer shall be provided for a period of not less than two 8-hour working days for the instruction of the Government operating personnel in the proper operation and maintenance of the equipment.

18. IDENTIFICATION TAGS AND PLATES: All equipment, gages, thermometers, valves, and controllers shall be provided with tags numbered and stamped for their usage. Plates and tags shall be of brass or suitable nonferrous material and shall be securely mounted or attached. Identification tags and plates shall be keyed to a chart and schedule, one for each system. Charts and schedules shall be mounted under glass, in a frame, and placed where directed near each system. Two copies of each chart and schedule shall be furnished.

19. FIELD TESTS: The following test shall be performed in addition to the tests specified in the Standard Plumbing Code. All defects in the work provided by the Contractor shall be corrected by him, at his own expense, and the tests repeated until all work is in accordance with contract requirements. Contractor shall furnish connecting devices, and personnel for the tests.

19.1 Solar Water Piping: Piping shall be subjected to a hydrostatic pressure test of 100 psig system working pressure for two hours.

---END---

SECTION 15723. STEAM DISTRIBUTION

1. APPLICABLE PUBLICATIONS: The publications listed below, but referred to elsewhere by basic designation only, form a part of this specification to the extent indicated by the references thereto (where a number is suffixed to the publication number, it denotes the effective amendment to the publication):

1.1 Federal Specifications:

FF-B-571A & Am 1	Bolts, nuts, studs, and tap-rivets.
GG-G-76D	Gages, pressure and vacuum, dial indicating.
HH-I-523C	Insulation blocks and pipe covering, thermal (Calcium silicate).
HH-I-558B & Am 3	Insulation; blocks, boards, blankets, felts, sleeving (pipe and tube covering), and pipe fitting covering; thermal (mineral fiber, industrial type).
WW-H-171D	Hangers and supports, pipe.
WW-T-696C & Am 1	Traps and vents (for steam, air and other applications).
WW-U-531E	Unions, pipe; steel or malleable iron, threaded connections, 150 and 250 pound.
WW-V-51E & Am 2	Valves, bronze; angle, check and globe (125, 150 and 200 pound; threaded, flanged and solder).
WW-V-54D & Am 3	Valves, gate, bronze (125, 150 and 200 pound; threaded, flanged and solder).
WW-V-58B	Valves, gate, cast iron (threaded and flanged).

1.2 Military Specifications:

MIL-S-16293F	Strainers, sediment, pipeline.
MIL-V-16733C	Valves, pressure regulating, steam.
MIL-E-17814C	Expansion joints, pipe, guided, slip-tube.
MIL-U-18250A & Am 1	Union, pipe, steel or malleable iron, threaded.
MIL-V-18434B	Valves, gate, globe and angle; steel.
MIL-V-18436C	Valves, check; bronze, cast iron and steel body.
MIL-V-18634A & Am 1	Valves, safety, relief and safety relief.
MIL-V-18826A	Valves, globe and angle, cast iron.

1.3 American National Standards Institute (ANSI):

B16.3-77	Malleable iron threaded fittings.
B16.5-73	Steel pipe flanges, flanged valves and fittings.
B16.9-71	Factory made wrought steel butt welding fittings.
B16.11-73	Forged steel fittings, socket welding and threaded.
B31.1-77 & Amd 77	Code for pressure piping.

1.4 American Society for Testing and Materials (ASTM):

A36-75	Structural steel.
A53-76	Welded and seamless steel pipe.
A106-77	Seamless carbon steel pipe for high temperature service.
A120-77	Black and hot dipped zinc coated (galvanized) welded and seamless steel pipe.
A126-73	Gray iron castings for valves, flanges, and pipe fittings.

1.5 Steel Structures Painting Council (SSPC):

PS 10.01-64T	Coal tar coating system No. 10.01 hot applied coal tar enamel.

2. GENERAL REQUIREMENTS: Section entitled "General Requirements, Mechanical", with the following additions and modifications, applies. The work includes providing above ground and underground steam distrubution systems and related work. Each system shall be complete and ready for operation. Equipment, materials, installation and workmanship shall be in accordance with ANSI B16.4 and B31.1, except as specified or indicated otherwise. Capacity of equipment shall be not less than that indicated. Piping shall be installed straight and true, and shall bear evenly on supports. Steam distribution system including piping, valves and accessories, shall be suitable for 125 psig saturated steam.

2.1 Submittals Required: Shop drawings, manufacturer's data and certificates for equipment, materials, finish,and pertinent details for each system shall be submitted and approved before procurement, fabrication or delivery of such items to the job site. Partial submission will not be acceptable. Descriptive data shall be annotated to show the specific model, type and size of each item the Contractor proposed to furnish. The submittal requirements of section entitled "General Requirements, Mechanical", applies to the following lists. Items in the following lists (which are followed by (CO) shall be approved by the Contracting Officer.

2.1.1 Manufacturer's Data:

(a) Condensate Return Units (CO)
(b) Pressure Reducing Valves
(c) Traps
(d) Underground insulated piping systems (CO)

2.1.2 Certificates: Submit certificates from the manufacturer attesting that each of the following items conform to all requirements of this specification and of reference publications.

(a) Condensate Return Unit (CO)
(b) Underground Insulated Piping Systems (CO)

3. PIPE AND FITTINGS: Piping shall be inspected, tested and approved before being buried, covered or concealed. Horizontal piping shall be pitched with a minimum grade of one inch in 40 feet in the direction of flow. Fittings shall be provided for changes in direction of piping, and for all connections. Reducing branch connections may be made with forged branch outlet reducing fittings for branches two pipe sizes smaller than mains. Branch outlet fittings where used shall be forged, flared for improved flow where attached to the run, reinforced against external strains, and designed to withstand full pipe bursting strength. Stab type connections will not be permitted. Jointing compound for pipe threads shall be pipe cement and oil, or graphite and oil. Short nipples shall be extra strong.

3.1 Steam Piping shall be standard weight black steel pipe conforming to ASTM A53, Grade B or A106, Grade B.

3.2 Condensate Piping, including drip and gage connecting piping, shall be extra strong black steel pipe conforming to ASTM A53. Condensate piping buried in the ground shall receive exterior coal tar coating system in accordance with SSPC-PS-10.01.

3.3 Fittings: ~~Steam piping less than one inch shall have threaded fittings, one to 2 inches shall have threaded or welding fittings, and 2.5 inches and larger~~ shall have welding fittings. Condensate piping shall have ~~welding fittings.~~

3.3.1 Threaded Fittings shall conform to ANSI B16.11, or ANSI B16.3, Class 150.

3.3.2 Socket Welding Fittings shall conform to ANSI B16.11.

3.3.3 Welding Fittings shall conform to ANSI B16.11, or B16.9 of the same material and weight as the piping in which they are installed.

3.3.4 Eccentric Reducing Fittings: Changes in horizontal steam piping sizes shall be made through eccentric reducing fittings conforming to ANSI B16.9 of the same material and weight as the piping in which they are installed.

3.4 Boiler feedwater piping shall be extra strong for sizes 2" and smaller and standard weight black steel for sizes 2-1/2" and larger, conforming to ASTM A53, Grade B or A106, Grade B. Fittings shall be threaded or welded for sizes 2" and smaller, and welded for sizes 2-1/2" and larger. Valves shall be as specified for 150 psig steam.

3.5 Boiler blowdown and continuous blowdown shall be extra strength black carbon steel conforming to ASTM A53, Grade B or A106 Grade B with welded fittings. Valves shall be as specified for 150 psig steam.

3.6 Chemical feed piping shall be extra strong black carbon steel conforming to ASTM A53, Grade B, or A106, Grade B with screwed fittings. Use

"3.3x "Sizes less than 1" shall have threaded fittings and end connections. Sizes 1 to 2" shall have threaded or socket-welding or butt-welding fittings and end connections except condensate piping shall have socket-welding connections and end connections. Provide threaded connections for threaded valves, traps, strainers and threaded connections to the equipment. Sizes 2-1/2" and larger shall have butt-welding fittings and end connections. Provide flanged connections for flanged valves, traps, strainers and flanged connections to equipment."

ties or crosses for directional change with unused openings plugged. Valves shall be forged steel conforming to MIL-V-18434, Service G, Class 150, screwed ends.

3.7 Welding shall be metallic arc process in accordance with ANSI B31.1, including qualification of welders. Certifications of each welder's qualifications shall be submitted to the Contracting Officer.

3.8 Flanges or unions shall be provided at valves, traps, strainers, and piping connections to each piece of equipment.

3.8.1 Flanges shall conform to ANSI B16.5, Class 150.

3.8.2 Unions shall conform to WW-U-531, Type A, Class 150 for steam, and Class 250 for condensate.

TABLE I

Maximum Steam Pressure (psig)	Valve Size (inches)	Gate Valves (rising stems)	Globe and Angle Valves	Check Valve (swing check)
125	2 and smaller	Bronze, WW-V-54, Type II, Class A (125)	Bronze, WW-V-51, Class A (125)	Bronze, WW-V-51, Type IV, Class A (125)
	12 and smaller	Cast Iron, WW-V-58, Type I, Class 1(125)	Cast Iron, MIL-V-18826, Class 125	Cast Iron, MIL-V-18436, Type III, Class 125
		Steel, MIL-V-18434, Service G, Class 150	Steel, MIL-V-18434, Service G, Class 150	Steel, MIL-V-18436, Type III, Class 150
150	2 and smaller	Bronze, WW-V-54, Type II, Class B(150)	Bronze, WW-V-51, Class B(150)	Bronze, WW-V-51, Type IV, Class B(150)
	12 and smaller	Cast Iron, WW-V-58, Type I, Class 2(250)	Cast Iron, MIL-V-18826, Class 250,	Cast Iron, MIL-V-18436, Type III, Class 250

4. VALVES

4.2 Pressure Reducing Valves: Delete the entire paragraph and substitute the following in lieu thereof:

"4.2x Steam Pressure Regulating Valves: MIL-V-16733, minimum of class 125 except as specified otherwise. Valve body shall be cast iron or cast steel. Valve seats and discs shall be of replaceable heat treated stainless steel. Valves shall be single seated, shall seat tight under deadend conditions, and shall go to the closed position in the event of pressure failure of the operating medium. Valves shall be spring loaded, diaphragm type, except valves exposed to ambient temperature of less than 35°F or exposed to the weather shall be piston operated type. Capacity of the valve shall be not less than that indicated. Pilot valves shall have strainer at inlet at external feeler piping.

4.2.1x Spring Loaded Diaphragm Operated Valves: Main spring shall be fabricated of stainless steel and shall not be in the path of steam flow through the valve. Valves shall be controlled by pilot valves through external feeler piping.

4.2.2x Piston Operated Valves: Valves shall be controlled by integral pilot valve through external feeler piping.

warm-up.

4.1 Gate, Globe, Angle and Check Valves shall conform to Table I for minimum of 125 psig saturated steam pressure.

4.2 Pressure Reducing Valves shall conform to MIL-V-16733, Type IV, Class 125. Vlaves shall seat tight under dead end conditions.

4.3 Safety Relief Valves with test lever shall conform to MIL-V-18634, Type III, Class 10, Style D, ANSI Class 150.

5. PIPING ACCESSORIES:

5.1 Pipe hangers, supports, and sleeves shall conform to section entitled "Supports and Sleeves".

5.2 Strainers shall conform to MIL-S-16293, Style Y, Class 125, and shall have blow off outlet with pipe nipple and gate valve.

5.3 Traps shall conform to WW-T-696, Class 4 and shall be of the types indicated. Traps shall have replaceable internals of stainless steel.

5.4 Gages shall conform to GG-G-76, Class 1, Style X, Type I, with 4.5 inch dial, brass or aluminum case, bronze tube. Scale range shall be suitable for the intended service.

6. Condensate Return Units shall conform to MIL-P-17749, shall have a hexahedral, floor mounted receiver, and shall be duplex units with capacities as indicated.

7. ABOVEGROUND PIPING INSULATION shall be in accordance with Section entitled "Insulation of Mechanical Systems".

8. IDENTIFICATION TAGS AND PLATES: All equipment, valves, gages, and controllers shall be provided with tags numbered and stamped for their usage. Plates and tags shall be of brass or suitable nonferrous material and shall be securely mounted or attached.

9. FIELD TESTING: Upon completion and before final acceptance of the work, each system shall be tested as in service to determine compliance with the contract requirements and in accordance with the requirements of ANSI B16.5 and B31.1. Before insulation is applied, each piping system shall be hydrostatically tested at not less than 1.5 times the working pressure in accordance with ANSI B16.5, but in no case less than 200 psig and shall show no leakage or reduction in gage pressure after 4 hours. Test pressure gages shall have dials indicating not less than 1.5 times nor more than 2 times the test pressure. Piping shall be thoroughly flushed and cleaned before being placed in operation. The Contractor shall furnish water, electricity, instruments, connection devices and personnel for the tests. Defects in the work provided by the Contractor shall be corrected by him at his own expense and the test repeated until the work is in compliance with the contract requirements.

10. UNDERGROUND INSULATED STEAM PIPING SYSTEMS including the steel conduit shall be of the prefabricated type for which a TRI-SERVICE LETTER OF ACCEPTABILITY has been issued by the Department of the Army, the Department of the Navy and the Department of the Air Force, for the manufacturer's submittal brochures entitled "Tri-Service Specification for Class A Underground Heat Distribution System". Equipment, materials, installation, workmanship, and tests of steel conduit shall be in accordance with the manufacturer's submittal brochures.

10.1 Pipe, Fittings, Valves and Piping Accessories shall be provided as specified hereinbefore, except piping connections in steel conduits shall be welded.

10.2 Piping Insulation:

10.2.1 Steam and Condensate Piping in Steel Conduit shall be insulated with calcium silicate insulation conforming to HH-I-523, Type II, Class A. Minimum thickness of insulation for condensate piping only in steel conduit shall be one inch; no insulation is required for condensate piping when installed in same steel conduit as steam piping. Minimum thickness of calcium silicate pipe insulation for steam piping in steel conduit shall be in accordance with Table IV. Where steam and fuel oil run in the same conduit, the inside of the conduit shall be insulated, and the pipe left bare.

TABLE IV
MINIMUM THICKNESS OF CALCIUM SILICATE PIPE INSULATION

Pipe Sizes (Inches)	Insulation Thickness (Inches)
2 and under	1.5
2.5 thru 5	2.0
6 thru 10	2.5
12 and larger	3.0

10.3 Excavation, Trenching and Backfilling shall be provided under this section and shall be in accordance with Section entitled "Earthwork".

---END---

SECTION 15771. SPLIT SYSTEM AIR CONDITIONING SYSTEMS

1. APPLICABLE PUBLICATIONS: The following publications of the issues listed below, but referred to elsewhere by basic designation only, form a part of this specification to the extent indicated by references thereto:

1.1 Federal Specifications:

F-F-310A & Int. Am. 1	Filter, Air Conditioning Viscous-Impingement and Dry Types, Replaceable.
OO-A-374 & Int. Am. 1	Air Conditioners with Remote Condensing Units or Remote Air-Cooled Condenser Units.

1.2 American National Standards Institute (ANSI) Publications:

B2.1-1968	Pipe Threads (Except Dryseal).
B9.1-1971	Safety Code for Mechanical Refrigeration.
B16.21-1972	Nonmetallic Gaskets for Pipe Flanges.
B16.22-1973	Wrought Copper and Bronze Solder-Joint Pressure Fittings.
B31.5-1974	Refrigerant Piping.
B70.1-1974	Refrigeration Flare Type Fittings.
B124.1-1971	Air Filter Units, Safety Standard for (UL900-April 1971).

1.3 Manufacturer's Standardization Society of the Valve and Fitting Industry (MSS) Publications:

SP-58-75	Pipe Hangers and Supports - Materials, Design and Manufacture.
SP-69-76	Pipe Hangers and Supports - Selection and Application.

1.4 National Electrical Manufacturers Association (NEMA) Publications:

ICS-1970 & Rev. 7	Industrial Controls and Systems.
MG-1-1970 & Rev. 8	Motors and Generators.

1.5 American Welding Society (AWS) Publications:

A5.0-71	Filler Metal Comparison Charts.
A5.9-69 & Add. 1	Corrosion Resisting Chromium and Chromium-Nickel Steel Welding Rods and Bare Electrodes.

1.6 Air-Conditioning and Refrigeration Institute (ARI) Publications:

410-72	Forced Circulation, Air Cooling and Air Heating Coils.
710-71	Standard for Liquid Line Driers.

1.7 American Society for Testing and Materials (ASTM) Publications:

10. UNDERGROUND INSULATED STEAM PIPING SYSTEMS:

Add the following new paragraph.

10.4x Contractor's Responsibility: For all underground preinsulated type piping systems, the Contractor shall obtain the services of a trained representative of the manufacturer to ensure that the system is installed in accordance with the manufacturer's recommendations. The manufacturer's representative shall be a person who is regularly engaged on a continuing basis in rendering such services for the manufacturer, and shall be certified in writing by the manufacturer to be technically qualified and experienced in the installation of the manufacturer's system, and shall be authorized by him to make and sign the daily reports specified below. The Contractor shall obtain from the manufacturer's representative, when the representative is on the construction site, a daily written report. The original report shall be presented to the Contracting Officer on the same day it is prepared, and one copy shall be forwarded to the manufacturer's main office. This report shall

be signed by the representative. The report shall state whether or not the condition and quality of the materials used and the isntallation of the system is satisfactory in all respects. If anything connected with the installation is unsatisfactory, the report shall state what corrective action has been taken, or shall contain the manufacturer's recommendations for corrective action. The report shall cover any conditions which could result in an unsatisfactory installation, including such items as open pipe ends or conduit ends left in the trench overnight, and improper manhole entries. The representative shall take prompt action to return to the factory all damaged or defective material, subject to rejection in accordance with the quality assurance provisions specified herein, and shall order prompt replacement of such material. The manufacturer's representative shall be present and shall perform his duties when any work is in progress from the initial delivery of material through the final tests after backfilling, except when the only work in progress is trenching. Upon completion of the work and before final acceptance, the Contractor shall deliver to the Contracting Officer a statement signed by a principal officer of both the manufacturing and the contracting firm, stating that the installation is satisfactory and in accordance with the plans, specifications, and manufacturer's installation instructions.

10.5x Warning Tapes in Earth Trenches: For the purposes of early warning and identification of buried pipes outside the building walls during future trenching or other excavation, continuous identification tapes shall be provided in the trench. Tape shall be non-magnetic plastic tape or aluminum foil plastic backed tape manufactured for the purpose of early warning and identification of utilities buried below the tape. Tape shall be at least three inches in width. Color of tape shall be as standard with the manufacturer with respect to the type of utility buried below the tape. Tape shall have lettering at least one inch high with not less than the following identification on the tape: BURIED STEAM PIPING BELOW. Tape shall be installed in accordance with the printed recommendations of the tape manufacturer, as modified herein. Tapes shall be buried at a depth of 6 inches below the top surface of earth; in pavements this 6 inches shall be measured from the top of the subgrade.

A120-76	Pipe, Steel, Black and Hot-Dipped Zinc-Coated (Galvanized) Welded and Seamless, for Ordinary Uses.
A525-76	Steel Sheet Zinc-Coated (Galvanized) by the Hot-Dip Process, General Requirements.
B88-76	Seamless Copper Water Tube.
B209-77	Aluminum-Alloy Sheet and Plate.
B210-76	Aluminum-Alloy Drawn Seamless Tubes.
B280-77	Seamless Copper Tube for Air-Conditioning and Refrigeration Field Service.

2. QUALITY CONTROL: Unless otherwise specified herein requirements for supervision, inspection, sampling, testing, approval, directing, authorizing and other requirements of similar importance shall be the responsibility of the Contractor Quality Control representative. The air conditioning system shall be designed, constructed and rating tested in accordance with ARI Standard 210 for unitary air conditioning equipment.

3. SUBMITTALS REQUIRED: Shop drawings, manufacturer's data and certificates for equipment, materials, finish and pertinent details for each system shall be submitted and approved before procurement, fabrication or delivery of such items to the job site. Partial submission will not be acceptable. Descriptive data shall be annotated to show the specific model, type and size of each item the Contractor proposes to furnish. The submittal requirements of section entitled "General Requirements, Mechanical", applies to the following lists. Items in the following lists (which are followed by (CO) shall be approved by the Contracting Officer.

3.1 Manufacturer's Data:

(a) Condensing Units (CO).
(b) Air Handler Units (CO).
(c) Controls and Appurtenances (CO).

3.2 Certificates: Submit certificates from the manufacturers attesting that each of the following items conform to all requirements of this specification and of reference publication.

(a) Condensing Units (CO).
(b) Air Handler Units (CO).
(c) Controls and Appurtenances (CO).

3.3 Shop Drawings: Shop drawings shall be submitted and approved before work is started. Shop drawings shall show size, location, gage shape, and method of construction and installation; other details as layout of split system air conditioning systems and other pertinent accessories, fasteners and details. Design calculations and complete erection instructions shall be submitted. The shop drawings and data shall be complete in one submittal.

3.4 Manufacturer's Catalog Data or other Descriptive Data: Manufacturer's catalog data or other descriptive data of fabrication and

installation, including factory protective coatings and related hardware and accessories, and hardware.

4. DELIVERY AND STORAGE: Split system air conditioning systems and other manufactured items shall be delivered, stored and handled in such a manner that they will not be damaged or deformed. Materials stored on the site before erection shall be stacked on platforms or pallets and covered with tarpaulins or other suitable weathertight covering. Components shall be stored so that water which might have accumulated during transit or storage will drain. All materials shall not be stored in contact with materials which might cause staining. Upon arrival on the job site, the split system components, hardware, accessories and fastening devices shall be inspected for accumulation of moisture. If found wet, the moisture shall be removed and the materials shall be packed and protected until used.

5. PERFORMANCE TESTING, MATERIALS AND FABRICATION:

5.1 Performance Rating: Cooling capacity of unit shall meet the sensible heat requirements and total heat requirements indicated. In selecting unit size, true allowance shall be made for "sensible to total heat ratio" to satisfy required sensible cooling capacity. Submittals shall include catalog selection data which accounts for sensible to total heat ratio, entering air conditions at evaporator, and condenser entering air conditions.

5.2 Air Conditioners, Remote Type: Except as otherwise specified herein the remote type air conditions shall conform to 00-A-374. Conformance to requirements for component parts for Military procurement is not required and conformance to 00-A-374 shall apply regardless of capacity. The air conditioning system shall consist of evaporator-blower unit and remote air cooled condensing unit. The separate assemblies shall be designed to be used together and ratings shall be based on the use of the matched assemblies. Performance diagrams shall be provided for units with capacities not certified by ARI to demonstrate that the components of the air conditioning system furnished will satisfy the capacity requirements specified or indicated on the drawings. The evaporator-blower unit shall be provided with hot water coils. Performance factors (Btu/hr cooling/watt input) shall be as specified in 00-A-374. The contractor shall submit data to demonstrate that the units will produce the performance factors specified.

5.3 Evaporator Fan: Evaporator fans shall conform to AMCA 210, and shall be forward curved type or backward inclined centrifugal type specifically designed and suitable for the operating pressure. Fans shall be provided with adjustable motor base and mounting base with locking device to secure base in proper position. Fans shall be provided with adjustable pitch pulley. Pulleys shall be selected at approximate mid-point of the adjustable range. Fan shaft shall not pass through their first critical speed when units come up to rated RPM. All units shall have grease lubricated fan bearings with externally accessible fittings for lubrication. Fan assemblies shall be statically balanced in the fan housing and final assembly. Fan motors shall

conform to NEMA MG-1. Motor starters shall conform to NEMA ICS. Motors shall be open type. Motor starters shall be magnetic across-the-line type with general purpose enclosure.

5.4 Compressors: Compressors shall be hermetically sealed type and shall be equipped with oil failure protection, low suction and high pressure protection, oil heaters, suction strainers, discharge valves, and provision for field testing and charging units. Compressors shall be provided with vibration isolators. Compressor motor shall be suitable for electric power characteristics as shown on drawings. Motor shall conform to NEMA MG-1. Motor starters shall conform to NEMA ICS. Motor shall be constant speed, squirrel-cage induction, open type or hermetically sealed, low-starting current, high-torque type, and shall be furnished with magnetic across-the-line type motor starter with watertight enclosures.

5.5 Coils: Heating and cooling coils shall conform to ARI 410 and to paragraph entitled "Heating and Cooling Coils". Coils shall be the type indicated.

5.5.1 The air cooled condenser coil shall be extended-surface fin-and-tube type and shall be seamless copper or aluminum tubes with copper or aluminum fins. Condenser coils for installation in salt air or corrosive atmosphere shall be constructed of aluminum tubes, fins and end sheets or copper tubes and tins and end sheets or copper tubes and fins and galvanized-steel end sheets. On condensers with all aluminum construction, aluminum alloy conforming to ASTM B210, alloy 1100, shall be used for the tubes, and aluminum alloy conforming to chemical requirements of ASTM B209, alloy 7072, shall be used for fins and sheets. Fins shall be soldered or mechanically bonded to tubes and installed in a metal casing. Coils shall be tested at pressures specified in ANSI B9.1 for refrigerant employed in system. After testing, coils for remote type units shall be dried to remove free moisture, and capped to prevent entrance of foreign matter. Coils shall be evacuated and sealed.

5.6 Filter Boxes: Filter boxes shall be provided with either hinged access doors or removable panels. Filter boxes shall have racks for filters arranged for flat. Filters shall be type as indicated and shall conform to paragraph entitled Filters, Air.

5.7 Controls:

5.7.1 Combination heat-off-cool and auto-on fan switch shall be mounted remotely where indicated. Thermostat shall be remotely mounted where indicated or directed. All other controls including motor starters and safety controls shall be mounted as shown.

5.7.2 Condenser Controls: Head pressure control shall be provided to insure condensing temperature for proper system operation at all ambients temperatures down to 40 degrees F.

5.8 Heating and Cooling Coils:

5.8.1 Direct-Expansion Coils: Direct-expansion coils shall be fin-and-tube type constructed of seamless copper tubes and copper, or aluminum fins mechanically bonded or soldered or helically wound to tubes. Casing and tube support sheets shall be not lighter than 16-gage (0.0635-inch nominal thickness) galvanized steel, formed to provide structural strength. Suction header shall be seamless copper tubing or seamless or resistance welded steel tube with copper connections. Supply header shall consist of a distributor which shall distribute the refrigerant liquid through seamless copper tubing, to all circuits in the coil equally. Tubes shall be circuited to insure minimum pressure drip and maximum heat transfer. Circuiting shall permit refrigerant flow from liquid inlet to suction outlet without causing oil slugging or restricting refrigerant flow in coil. Each coil shall be tested at the factory under water at not less than 300 psi air pressure and shall be suitable for 200 psi working pressure. Each coil shall be completely dehydrated and sealed at the factory upon completion of pressure tests. Coil shall be mounted for counterflow service. Coils shall conform to the provisions of ARI Standard 410.

5.8.2 Water Coils: Water coils shall be fin-and-tube type constructed of seamless copper tubes and copper or aluminum fins mechanically bonded or soldered or helically wound to tubes. Casing and tube support sheets shall be 16-gage (0.0635-inch nominal thickness) galvanized steel, formed to provide structural strength. Tubes shall be correctly circuited for proper water velocity without excessive pressure drop and they shall be drainable where required or indicated on drawings. Each coil shall be tested at the factory under water at not less than 250 psi air pressure and shall be suitable for 200 psi working pressure. Coils shall be mounted for counterflow service. (Drainable coils shall be installed in the air handling units with a pitch of not less than 1/8-inch per foot of tube length toward the drain end.) Coils shall conform to the provisions of ARI Standard 410. Water coil capacities, pressure drops and selection procedures shall be certified in accordance with ARI Standard 410.

5.9 Filters: Filters shall be provided to filter fresh air and return air and shall be located inside air conditioners. Filters shall be replaceable throw-away type. Filters shall conform to ANSI B124.1-1971 and shall be class 1, or class 2.

5.10 Replaceable Throw-away Filters: Replaceable throw-away filters shall conform to F-F-310 and shall be throw-away frames and media type, one inch thick, grade A, standard dust holding capacity. Holding frames shall be provided and shall be fabricated from not less than 16-gage (0.0598-inch nominal thickness) sheet steel with rust inhibitor coating. Each holding frame shall be equipped with suitable cell holding devices, and cell seats shall be gasketed. Where indicated or required, filter bank shall be erected, and all joints shall be air tight.

5.11 Refrigerant Piping and Accessories:

5.11.1 General: Material and dimensional requirements for refrigerant piping, valves, fittings, and accessories assembled in the field shall conform to ANSI B9.1 and ANSI B31.5, except as hereinafter specified. Materials and design shall be suitable for the service. Refrigerant piping shall be cleaned, dehydrated, and sealed as delivered.

5.11.2 Refrigerant Piping: Refrigerant piping shall be seamless copper tubing, hard drawn, type K or L, conforming to ASTM B88, except that tubing with outside diameters of 1/4-inch and 3/8-inch shall have nominal wall thickness of not less than 0.030-inches and 0.032-inches respectively. Soft annealed copper tubing conforming to ASTM B280 may be used where flare connections to equipment are required only in nominal sizes less than one inch.

5.11.3 Fittings: Fittings for copper tubing shall be wrought copper or bronze solder joint fittings conforming to ANSI B16.22. Bronze flanges shall conform to ANSI B16.21. Refrigerant flared tube fittings shall conform to ASTM B70.1.

5.11.4 Brazing Filler Material: Brazing filler material for refrigerant piping shall conform to AWS A5.9.

5.11.5 Pipe Hangers and Supports: Pipe hangers and supports shall conform to MSS SP-69 and MSS SP-58.

5.12 Valves: Valves shall be designed, manufactured, and tested specifically for the service in all respects including materials. Internal parts shall be removable for inspection or replacement without the necessity of applying heat or breaking pipe connections. Direction of flow shall be legibly and permanently indicated on the valve body.

5.12.1 Globe and Angle Refrigerant Valves: Valves shall conform to ANSI B9.1 and B31.5 and be of forged brass bronze alloy with packed stem and seal cap. Packless type valves with hand wheels and forged brass or bronze alloy bodies with brazing ends may be used in sizes up to and including 7/8-inch OD. Bonnets shall be replaceable with the valve in place. All refrigerant valves shall be back-seating so they can be repacked under pressure.

5.12.2 Check Valves: Check valves shall be swing or lift type, designed for low pressure drop. Body shall be forged brass or bronze alloy with brazing ends. Valves shall be tight closing and silent operating.

5.12.3 Relief Valves, Safety, Refrigerant: Valves shall conform to ANSI B9.1 and B31.5 and have bodies of forged brass and non-ferrous corrosion resistant internal working parts. Valves shall have either female threaded or brazing connections. Valves shall be installed on refrigeration systems and set in accordance with ANSI B9.1. Manufacturers shall submit published air discharge capacity ratings of relief valves.

5.12.4 Solenoid Valves, Refrigerant: Valves shall conform to ANSI B9.1 and B31.5 and be of the two position, direct acting or pilot operated types, opened or closed electrically as specified for use with liquid or gas. Valves shall be designed for the pressure drop required and as listed by the Underwriters' Laboratories, Inc. for the service. Valves shall have seal capped manual opening stems and shall be constructed so that they may be serviced without removing from the line. Each valve shall include a coil housing, stem and plunger or piston assembly non-magnetic to the plug, stainless steel enclosing tube, seat and plunger, and proper inlet and outlet connections for installing into the piping systems. Direction of flow shall be indicated on the body. Solenoid valves shall be designed, manufactured and tested specifically for the service in all respects, including material. Valve manufacturer shall submit published ratings and maximum operating pressure differential. The coil housing shall include a moisture-proof coil in a metal housing with electrical wires extending through a female pipe tap conduit connection. Coils shall be wired for the electrical current used and be capable of withstanding the temperature of the liquid or gas encountered plus the heat from the coil for the longest running time expected. Bodies, stems and pistons shall be of a material that will not corrode or pit when used in the refrigerant systems. Valve with threaded connections shall conform to American Standard NPT in accordance with ANSI B2.1. Direct operated valves shall be of the type that operates the plunger by direct action of the coil. Pilot operated valves shall be of the floating piston type where movement of the plunger is opened by a small pilot port that is energized or shall be of the direct connected plunger type where movement of plunger is by a small pilot port that is energized. The pilot operated valve with floating piston shall be used on 1/2-inch or larger port size valves. Valves in sizes 1-1/4 inches and larger shall have tongue and grooved flange connections with companion flanges brazing to piping. Sizes one inch and smaller may either have female thread connections or the valve may be non-ferrous with brazing connections.

5.13 Strainers, Refrigerant: Strainers shall be of the single type with brass bodies. Direction of flow shall be permanently indicated on the body. The screen cover shall be flanged and bolted for pipe sizes one inch and larger and for smaller sizes the cover may be flanged and bolted or screwed. The body shall be constructed to provide adequate storage area for foreign material without excessive pressure drop. Free area of the screen shall be not less than 5 times the area of the strainer inlet pipe. Screen mesh size of not less than 80 shall be provided for liquid refrigerant lines of one inch in diameter and screen mesh sizes of not less than 60 for line sizes over one inch in diameter. Screen mesh sizes of not more than 40 shall be provided for refrigerant suction lines. Strainer screens shall be reinforced with 8 or 10 wire mesh screen. Strainers may be an integral part of the expansion valve. Brazed strainer and screen joints shall be brazed with solder specified hereinbefore for copper piping connections.

5.14 Refrigerant Driers: Refrigerant driers in the liquid line shall be of the solid desiccant type. Water capacity, flow rate capacity within the specified pressure drop, and safety shall conform to the requirements of ARI

Standard 710. Driers 50 cubic inches and larger shall be of the cartridge refillable type, and shall be provided with a valved bypass of the same size as the liquid line. Drier body shall be of brass and shall be provided with means for holding the desiccant securely in place and distributing the liquid refrigerant evenly throughout the desiccant. Driers shall be capable of withstanding a pressure of 350 psi.

5.15 Moisture Indicators: Moisture indicators in the liquid line of refrigerant systems shall contain indicating material that will indicate, by varying degrees of color change. Based on 100 degrees F a moisture content in the range of 10 to 30 ppm in R12; 25 to 90 ppm in R502, and 45 to 180 ppm in R22. Indicators shall be a brass or bronze or heavily copper plated steel fitting, with the indicator material located under a bull's-eye. Indicators shall be capable of withstanding a test pressure of 350 psi without damage. Driers may be of the combination drier-indicator type.

5.16 Sight Glasses, Liquid Refrigerant: Sight glasses shall be of the double-port see-through type with two bull's-eyes and cover caps of nonferrous material, unless combined as a part of the moisture indicator. Sight glass indicators shall be capable of withstanding a test pressure of 350 psi without damage. Sight glass body shall be forged brass or bronze with fittings as specified for the piping.

5.17 Pipe Sleeves: Pipe sleeves through outside wall, floors or roof slabs shall be zinc-coated steel pipe conforming to ASTM A120. Sleeves through inside partitions shall be zinc-coated sheet steel not less than 0.0217-inches thick conforming to ASTM A525. Pipe sleeve through floor, walls and roofs of equipment room shall be of sufficient size to allow for clearance of pipe insulation.

6. INSTALLATION:

6.1 General: Equipment and components shall be completely installed in a manner to insure proper and sequential operation of the equipment and its controls. Installation of equipment not covered herein or in manufacturer's instructions shall be installed as recommended by manufacturer's representative. Proper foundations for mounting of equipment, accessories, appurtenances, piping and controls shall be provided, including but not limited to, supports, vibration isolators, stands, guides, anchors, clamps and brackets. Foundations for equipment shall conform to equipment manufacturer's recommendation, unless otherwise shown on drawings. Anchor bolts and sleeves shall be set accurately using properly constructed templates. Anchor bolts shall be of adequate length and provided with welded-on plates on the head end embedded in the concrete. Equipment bases shall be leveled, using jacks or steel wedges, and neatly grouted-in using a nonshrinking type of grouting mortar. Equipment shall be located so that working space is available for all necessary servicing such as shaft removal, disassembling compressor cylinders and pistons replacing or adjusting drives, motors, or shaft seals, access to water heads and valves of shell and tube equipment, tube cleaning or replacement, access to automatic controls, refrigerant charging, lubrication,

oil draining and working clearance under overhead lines. Electric isolation shall be provided between dissimilar metals for the purpose of minimizing galvanic corrosion.

6.2 Unitary Air Conditioning System: System shall be installed as indicated, in accordance with the requirements of ANSI B9.1, as recommended in the manufacturer's installation and operation instructions.

6.2.1 Room air conditioners shall be installed in accordance with manufacturer's instructions and provided with structural mountings, panels, and seals for weathertight assembly. Wall sleeves shall be pitched as recommended by manufacturer to insure condensate drain to drain pan without overflow.

6.3 Electrical Work: Electric motor driven equipment specified herein shall be provided complete with motors, motor starters and controls. Motor starters shall be provided complete with properly sized thermal overload protection and other appurtenances necessary for the motor control specified. Manual or automatic control and protective devices required for the operation herein specified and any control wiring required for controls and devices but not shown on the electrical plan shall be provided.

6.4 Piping: Fabrication and assembly of piping components: Brazing, bending, forming and assembly of refrigerant piping shall conform to ANSI B31.5. Refrigerant piping shall also conform to ANSI B9.1.

6.4.1 Pipe Hangers and Supports: Design and fabrication of pipe hangers, supports, and welding attachments shall conform to MSS SP-58. Hanger types and supports for bare and covered pipes shall conform to MSS SP-69 for the system temperature range. Unless otherwise indicated on the drawings, horizontal and vertical piping attachments shall conform to MSS SP-58.

6.4.2 Vibration isolation for piping in the mechanical equipment room and for piping connected to rotating equipment shall have flexible vibration isolators, corrugated type, nonporous bronze alloy installed on liquid and gas refrigerant lines.

6.4.3 Refrigerant Piping: Pipe shall be cut accurately to measurements established at the site and shall be worked into place without springing or forcing. All piping shall be installed with sufficient flexibility to adequately provide for expansion and contraction due to temperature fluctuation inherent in its operation. No piping shall be run concealed in walls or partitions not underground or under the floor except as indicated on drawings. Where pipe passes through the building structure pipe joints shall not be concealed, but located where they may be readily inspected. All pipe to be insulated shall be run as shown and as required with sufficient clearance to permit application of insulation. All piping shall be run essentially as shown and detailed on the plans, care being taken to avoid interference with other piping, conduit or equipment. Except where specifically shown otherwise on the drawings, piping shall run plumb and

straight and parallel to walls and ceilings. Refrigerant piping shall slope as shown on drawings. Trapping of lines shall not be permitted except where shown on the drawings. Sleeves of suitable size shall be provided for all lines passing through building structure. Refrigerant piping shall be brazed with silver solder complying with AWS A5.0. The inside of tubing and fittings shall be free of flux. The parts to be jointed shall be cleaned bright with emery cloth and shall be heated to a temperature slightly greater than the solder flow point, and shall be kept hot until the solder has penetrated the full depth of the fitting and the extra flux be expelled. Joints shall be cooled in air after which flame marks and traces of flux shall be removed. During the brazing operation, the tubing shall be protected from forming an oxide film on the inside by slowly flowing dry nitrogen to expel the air. Provision shall be made to automatically return oil on holocarbon systems. Installation of piping shall comply with ANSI B31.5.

6.4.4 Pipe Sleeves: All pipes and tubing which penetrate the building structure shall be provided with pipe sleeves. Sleeves shall be securely retained in position and location before and during construction. Space between pipe and sleeves, or between insulation of pipe and sleeves, shall be not less than 1/4-inch between outside of pipe or insulation, and inside wall of sleeves. The annular space shall be packed with hemp or fiber glass, and sealed with elastic cement. Sleeves for uninsulated pipes shall end flush with finished wall surfaces and the pipe or tubing shall be provided as above, with outside perimeter of pipe caulked to the sleeve. Sleeves for insulated pipes shall extend 1/2-inch from the masonry faces and shall be caulked to the sleeve on both sides. Terminal ends of pipe insulation shall be sealed with mastic. Sleeves for lines passing through floors shall extend 3 inches above finished floor slab, and shall be caulked to the slab. Lines passing through roof areas shall be equipped with necessary flashing and counter flashing to provide a water-tight roof seal.

6.4.5 Pipe sleeves in equipment room walls, and floor, shall be of sufficient size to allow for clearance of pipe insulation.

6.4.6 Returning Oil From Refrigerant System: Refrigerant lines shall be installed so that the gas velocity in the evaporator suction line is sufficient to move the oil along with the gas to the compressor. Where equipment location requires a vertical riser, the line size shall be such as to provide sufficient velocity to lift the oil at minimum system loading and corresponding reduction of gas volume. A double riser shall be installed when excess velocity and pressure drop would result from full system loading. The larger riser shall have a trap, of minimum volume, obtained by use of 90 degree and 45 degree ells. The small riser shall be arranged with inlet close to bottom of horizontal line, and shall connect to top of upper horizontal line. Valves shall not be installed in risers.

6.4.7 Refrigerant driers, sight glass liquid indicators, moisture indicators, and strainers shall be provided in refrigerant piping for remote installations when not furnished by the manufacturer as part of the equipment. Driers shall be installed in liquid line with service valves and valved bypass

lines which are the same size as liquid line in which the drier is installed. Driers of 50 cubic inches and larger shall be installed vertically with the cover for removing cartridge at the bottom.

6.4.8 Moisture indicators shall be installed in the liquid line downstream of the drier. Indicator connections shall be the same size as the liquid line in which it is installed.

6.4.9 Strainers shall be located close to equipment they are to protect. A strainer shall be provided in the common refrigerant liquid supply to two or more thermal valves in parallel when each thermal valve has a built-in strainer. Strainers shall be installed with screen down and in direction of flow as indicated on strainer's body.

6.4.10 Refrigerant Charging Valve: A valved refrigerant charging connection shall be provided for each remote type refrigeration system when not provided as part of equipment. The valve shall be located on the reducing outlet of a full size tee in the liquid line, upstream from the refrigerant drier and liquid indicator sight glass. Valve shall be of the seal cap type.

6.4.11 Solenoid valves shall be installed in horizontal lines with stem vertical and with flow in direction indicated on the valve. If not incorporated as integral part of the valve, strainers shall be provided upstream of the solenoid valve, with service valves upstream of the solenoid valve and with service valves upstream of the strainer and downstream of the solenoid valve. The solenoid valve shall be removed when brazing the valve.

6.5 Auxiliary Drain Pans, Drain Connections, and Drain Lines: Auxiliary drain pans shall be provided under all drain pans of units where condensate overflow over unit drain pan may cause damage to equipment below. Drain lines shall be provided for all drain and auxiliary drain pans. Drain from bottom pan of air conditioning units shall be trapped to insure complete pan drainage. Drain lines shall be full size of opening.

6.6 Air Filters: Air filters shall be installed so that access space for servicing the filters is provided. Filters shall be installed with suitable sealing to prevent bypassing of air.

7. FIELD REPAIR AND TOUCH-UP: Where split system components, accessories, hardware and fasteners have factory finish damaged, repair in accordance with manufacturer's touch-up system. Repaired surfaces not acceptable shall be replaced without expense to the Government.

8. FIELD TEST AND INSPECTIONS: All field inspections, field tests, and trial operations specified in this section shall be performed. The contractor shall provide all albor, equipment and incidentals required of the testing, except that the Government will provide electric power or water required for the tests. The Contracting Officer will witness all field tests and trial operations specified in this section. The Contractor shall give the

Contracting Officer ample notice of the dates and times scheduled for tests and trial operations which require the presence of the Contracting Officer.

8.1 Field Inspections: Prior to initial operation, the piping system shall be examined and inspected by the Contracting Officer for conformance to plans and specifications. All equipment, material, or work rejected because of defects or non-conformance with plans and specifications shall be replaced or corrected by the contractor as directed by the Contracting Officer.

8.2 Field Test: After completion of the piping installation and prior to initial operation, tests shall be conducted.

8.2.1 Equipment and Material: Equipment and material certified as having been successfully tested by the manufacturer in accordance with referenced specifications and standards will not require retesting before installation. Equipment and materials not tested at the place of manufacturer will be tested before or after final installation, as applicable, where necessary to determine compliance with referenced specifications and standards.

8.3 Piping Tests: After the refrigeration piping and fittings have been assembled, all flux shall be removed from connections and all lines shall be clean. The piping system shall be blown out with dry nitrogen to remove any free water or dirt which might be present. The refrigerant lines shall be charged with dry nitrogen and proven tight at minimum gauge pressures of 300 PSI on thehigh side and 150 PSI on the low side. The system shall hold these pressures for a period of 24 hours without pressure drop except for pressure change due to temperature differential.

8.4 Evacuation and Dehydration: After the piping system has been proven tight by the pressure test, evacuation and dehydration of the system shall be accomplished using the double evacuation method described in the following paragraphs.

8.5 Equipment and Conditions: Provide a two stage, high vacuum pump capable of pumping down to 100 microns or lower while evacuating the system, and of adequate displacement to evacuate the various systems within a reasonable period of time based upon maximum vacuum of 5.16 millimeters of mercury absolute. Also provide a wet-built vacuum indicator, a supply of 100 percent methyl alcohol for use with this instrument and a temperature-pressure conversion chart for 100 percent methyl alcohol. The evacuation shall be done only when the ambient air temperature is 50 degrees F. or higher. Go no lower than 5.16 millimeters of mercury absolute on the evacuation procedure to prevent the formation of ice in the piping system.

8.6 Primary Evacuation: This procedure begins after the vacuum pump and wet-bulb vacuum indicator have been properly attached to the piping system. The vacuum pump is operated continuously until the pressure within the system reaches 5.16 millimeters of mercury absolute at which point the pump is stopped.

8.7 Secondary Evacuation: Using the same dry refrigerant with which the system is to be charged, break the vacuum and bring the system pressure to a point slightly above atmospheric pressure. Start the vacuum pump, and using the wet-bulb vacuum indicator, evacuate the system to 5.16 millimeters of mercury absolute. Stop the vacuum pump and charge the system with a full charge of dry refrigerant.

9. OPERATIONAL TEST:

9.1 Contractor to operate system and record hourly operating conditions for eight hours with each compressor by furnishing and certifying the following information to the Contractor Quality Control Organization for approval, and submitted to the Contracting Officer for record purposes.

9.2 Indicate NAVFAC Project Number, contractor, date, cooler name and room number. Time of day for record data.

Compressor:

Approximate running time
Pressure Gage Readings (Suction and Discharge)
State (Running or Idle)

Compressor Name Plate Data:

Make
Model
Displacement
Horsepower
R.P.M.
Actual Amps (Starting and Running)
Refrigerant Type
System Charge in lbs.

---END---

SECTION 15802 AIR SUPPLY SYSTEMS

1.1 APPLICABLE PUBLICATIONS: The following publications of the issues listed below, but referred to thereafter by basic designation only, form a part of this specification to the extent indicated by references thereto:

1.1 Federal Specifications:

F-F-300A	Filter, Air Conditioning; Viscous Impingement and Dry Types, Cleanable.
F-F-310A	Filter, Air Conditioning; Viscous Impingement and Dry Types, Replaceable.
F-F-320A	Filter, Air, Electrostatic Precipator.
W-F-001350	Fan, Air Curtain.
HH-I-545B	Insulation, Thermal and Acoustic (Mineral Fiber, Duct Lining Materials).
HH-I-558B	Insulation, Blocks, Boards, Blankets, Felts, Sleeving Pipe and Tube Covering, and Pipe Fitting Covering, Thermal Mineral Fiber, Industrial Type.
WW-P-351A	Pipe Red Brass (Copper Alloy No. 230), Seamless Standard Pipe Size, Regular and Extra Strong.
ZZ-B-225A	Belts V; Industrial (Multiple Drive).

1.2 Military Specifications:

MIL-A-3316B & Am 2	Adhesive, Fire-Resistant, Thermal Insulation.
MIL-P-26915A & Am 1	Primer Coating, Zinc Dust Pigmented, for Steel Surfaces.
MIL-A-52670	Air Conditioning Component; Fan-Coil Room Units.

1.3 Federal Standards:

FED-STD-141a	Paint Varnish, Lacquer, and Related Materials; Methods of Inspection, Sampling, and Testing.

1.4 Air Conditioning and Refrigeration Institute (ARI); Standards:

Change "410-64" to "410-72". ed Circulation Air-cooling and Air Heating Coils.
Change "430-66" to "430-74". ral Station Air Handling Units.

1.5 Air Diffusion Council (ADC) Publication:

1062R3	Air Diffusion Test Code.

1.6 Air Moving and Conditioning Association (AMCA) Standards:

99-69	Standards Handbook (June 1969).
210-67	Test Code for Air Moving Devices.
300-67	Test Code for Sound Rating Air Moving Devices.

1.7 American National Standards Institute (ANSI) Publications:

B15.1-1972	Safety Code for Mechanical Power-Transmission Apparatus.

1.8 American Society for Testing and Materials (ASTM) Publications:

A123-73	Zinc (Hot Galvanized) Coatings on Products Fabricated from Rolled, Pressed, and Forged Steel Shapes, Plates, Bars and Strips.
A527-71	Zinc Coated (Galvanized) Carbon Steel Sheets for Lock Forming Quality.
A167-74	Corrosion-Resisting Chromium-Nickel Steel Plate, Sheet and Strip.
B127-74	Nickel-Copper Alloy Plate, Sheet, and Strip.
D1187-66	Asphalt-Base Emulsions for Use as Protective Coatings for Metal.
E84-77	Test for Surface Burning Characteristics of Building Materials.
E96-66	Test for Water Vapor Transmission of Materials in Sheet Form.

1.9 American Society of Heating, Refrigerating and Air-Conditioning Engineers (ASHRAE) Publications:

Change "Guide and Data Book, Applications. (1974)" to "Guide and Data Book, Applications. (1978)".

Guide and Data book, Systems and Equipment. (1975-1976)

Standard 36-62	Measurement of Sound Power Radiated from Heating, Refrigerating and Air Conditioning Equipment.
Standard 36B-63	Method of Testing for Rating the Acoustic Performance of Air Control and Terminal Devices and Similar Equipment.

1.10 National Fire Protection Association (NFPA) Standards:

No. 70-1978	National Electrical Code.
No. 90A-1977-1978	Air Conditioning and Ventilating Systems other than Residential Types.

Change No. "90A-1977-1978" to "No. 90A-19

1.11 Sheet Metal and Air-Conditioning Contractor's National Association (SMACNA)

Change "High Velocity Duct Construction Standards 1969" t
Pressure Duct Construction Standards 1975."

High Velocity Duct Construction Standards. (1969)

Low

Change "Low Velocity Duct Construction Standards 1969" to "L
Pressure Duct Construction Standards 1976."

1.12 Underwriter's Laboratories (UL):

UL73-1975	Motor-Operated Appliances.
UL181-1974	Air Ducts.
UL-586-1975	High Efficiency, Particulate, Air Filter Units.
UL900-1973	Air Filter Units.

1.13 National Electrical Manufacturer's Association (NEMA) Standards:

ICS-76	Industrial Control Systems.
MG-1-76	Motors and Generators.

2. GENERAL REQUIREMENTS:

2.1 Air Supply Systems: General requirements shall be as specified in section entitled "General Requirements".

2.2 Associated Work: Other work associated with air supply systems, including central refrigeration equipment, piping, insulation of equipment and piping, vibration isolation, space temperature controls, automatic control dampers, and testing and balancing air and water system is covered in other sections of this specification.

2.3 SMACNA Duct Construction Manuals: The SMACNA recommendations shall be considered as mandatory requirements. The word "should" shall be replaced with "shall".

2.4 Corrosion Prevention: Except as otherwise specified herein, factory coating for equipment when fabricated from ferrous metals, shall be treated for prevention of rust by coating or paint system that will withstand 125 hours in a salt-spray fog test, except that equipment located outdoors shall be tested for 500 hours. The salt spray fog test shall be in accordance with method 6061 of Federal Standard 141 using a 20 percent sodium chloride solution. Immediately after completion of the test, the coating shall show no sign of blistering, wrinkling or cracking, no loss of adhesion, and the specimen shall show no signs of rust creepage beyond 1/8-inch on either side of the scratch mark. The film thickness of the factory coating or paint system applied on the equipment shall be not less than film thickness used on the test specimen.

2.5 Safety Standards:

2.5.1 The air supply system shall conform to NFPA 90A, and NFPA 96.

2.5.2 Couplings, motor shafts, gears or other moving parts shall be fully guarded, in accordance with ANSI B15.1 Safety Code for Mechanical Power Transmission Apparatus. Guards shall be cast iron or expanded metal. Guard parts shall be rigid and suitably secured and be readily removable without disassembling the guarded unit.

3. SUBMITTALS

3.1 Submittals Required: Shop drawings, manufacturer's data and certificates for equipment, materials finish, and pertinent details for each system shall be submitted and approved before procurement, fabrication or delivery of such items to the job site. Partial submission will not be acceptable. Descriptive data shall be annotated to show the specific model,

type and size of each item the Contractor proposes to furnish. The submittal requirements of section entitled, "General Requirements, Mechanical", applies to the following lists. Items in the following lists (which are followed by (CO) shall be approved by the Contracting Officer.

3.1.1 Manufacturer's Data:

a. Air Handling Units (CO)
b. Heating and Ventilating Units (CO)
c. Fans (CO)
d. Roof Ventilators (CO)
e. Coils (CO)
f. Humidifier (CO)
g. Filters (CO)
h. Vibration Isolators (CO)
i. Sound Traps (CO)
j. Air Curtain (CO)
k. Air Terminals (CO)
l. O.R., Delivery Rooms and Cyotorcopy Room Air Distribution (CO)

3.2 Certificates: Submit certificates from the manufacturer attesting that each of the following items conform to all requirements of this specification and of refrence publications.

a. Air Handling Units (CO)
b. Heating and Ventilating Units (CO)
c. Fans (CO)
d. Coils (CO)
e. Filters (CO)
f. Air Curtain (CO)
g. Sound Traps (CO)
h. Air Terminals (CO)

3.3 Manufacturer's Recommendations: Where installation procedures or any part thereof are required to be in accordance with the recommendations of the manufacturer of the material being installed, printed copies of these recommendations shall be furnished to the Contracting Officer prior to installation. Installation of the item will not be allowed to proceed until the recommendations are received. Failure to furnish these recommendations can be cause for rejection of the material.

4. SHEET METAL DUCTWORK:

4.1 Sheet Metal Materials: Sheet metal materials specified hereinafter shall conform to the following material requirements:

4.1.1 Galvanized Steel Sheets: ASTM A527, weight of galvanized coating shall be not less than 1-1/4 ounces total for both sides of one square foot of a sheet.

4.1.2 Galvanized Steel Hot Dipped After Fabrication: ASTM A123.

4.1.3 Aluminum Alloy Sheets: MIL-A-52174.

4.1.4 Copper Sheets: ASTM B152; light cold rolled temper.

4.1.5 Corrosive Resisting (Stainless) Steel Sheets: ASTM B127.

4.2 High Velocity Ducts: High veloctiy ducts shall be constructed of galvanized sheets Change "SMACNA High Velocity Duct" to "SMACNA High Pressure Duct"

4.2.1 Pressure classification shall be as defined in SMACNA High Velocity Duct Construction Standard. The extent of pressure classification for construction of the air distribution system components shall be as indicated on the drawings. Where duct work pressure is not indicated it shall be taken as the fan static pressure and pressure classification required by SMACNA shall be provided.

4.2.2 Duct construction, metal gages and reinforcements shall conform to the current editions of the SMACNA High Velocity Duct Construction Standards. Ducts shall not pulsate or vibrate when in operation. Limits where pressure classification for rectangular ducts systems change, shall be as indicated. Curved elbows shall have a center line radius not less than 1-1/2 times the width of ducts.

4.2.3 Joints shall be constructed to meet the requirements of the leakage test hereinafter specified. Horizontal locks or seams of the type known as "Button Punch Snap Lock' will not be permitted.

4.2.4 Square elbows, fittings, branch take-offs, transitions, splitters, duct volume dampers, fire dampers, flexible connections and access doors shall conform to the SMACNA Duct High Velocity Construction Standards.

4.2.5 Round Duct and Spiral Lock Seam Ducts:

4.2.5.1 Connections to fittings and duct shall be made with fire-resistant rubber-base duct sealing compound and locked with not less than three equally spaced drivescrews or other approved methods indicated in the SMACNA High Velocity Duct Construction Manual. The sealing compound shall be applied to the exposed male part of the fitting collar so that the sealer will be on the inside of the joint and fully protected by the metal of the duct and fitting. One brush coat of sealing compound shall be applied over the outside of the joint to at least 2 inch band width covering all screw heads and joint gap. When tape is used, a single wrap of a duct tape shall be applied over the wet sealer. The tape used shall be as recommended by the manufacturer of the sealer to permit proper curing of the sealer. Dents in the male portion of the slip fitting collar will not be acceptable.

4.2.5.2 Elbows: Ducts 8 inches or less in diameter shall be provided with 45- and 90-degree elbows of 2-piece die stamped construction, and over 8 inches in diameter shall be 5-mitered piece for 90 degrees and 3-mitered piece for 45 degrees.

4.2.6 Rectangular Ducts:

4.2.6.1 Joints between sections of duct and between ducts and fittings shall be made with either gasketed flanged connection, welded flange joints or other joints recommended in Section 2, SMACNA High Velocity Duct Construction Manual, and shall be reinforced at the joints and between the joints as recommended.

4.2.7 Sound Traps: Sound traps shall be provided on the discharge duct of each high-pressure fan and as shown on the drawings. Traps shall be factory-fabricated and shall have a maximum self-noise sound power level, decibels referenced 10^{-12} watt of 65 decibels in the 425 HZ mid-frequency octave band. Maximum permissible pressure drop shall be as indicated on the drawings. The traps shall be constructed to be airtight when operating under an internal pressure of 8 inches of water. Sound absorbing materials used as a liner shall be as hereinafter specified. The air-side surface shall be capable of withstanding air velocity of 10,000 feet-per-minute. When sound traps are submitted for approval, the Contractor shall certify that the insertion loss and self-noise power level specified and aerodynamic performance indicated will be obtained when installed in the system and have been coordinated with the fan sound information. System fan shall be provided hereinafter under paragraph FANS AIR HANDLING SYSTEMS. Sound absorbing material shall conform to specification HH-I-545, type I or type II. Suitable duct transition sections shall be provided for connection to ductwork.

4.2.7.1 Factory-fabricated Sound Traps: Factory-fabricated sound traps shall be constructed of a galvanized sheet steel casing and sound absorbing material covered with an internal perforated zinc-cated metal liner. The sound absorbing material shall be faced with glass fiber cloth and held in compression to prevent settling. The internal perforated metal liner shall be not less than 24 gage (0.0276-inch nominal thickness) with perforations not larger than 5/32-inch in diameter providing a net open area not less than 10 percent of the surface. The traps shall be insulated to prevent sweating. The manufacturer shall certify that the sound-trap has the insertion loss specified hereinbefore. The sound trap shall be acoustically tested with metal duct inlet and outlet sections while under the rated air flow conditions. The insertion loss data shall include the effects of flanking paths and vibration transmission.

4.2.7.2 Factory-fabricated double-walled internally insulated duct and fittings designed for high-velocity air system may be provided in lieu of factory-fabricated and shall comply with all requirements specified hereinbefore for factory-fabricated sound traps. The double-walled duct and fittings shall be constructed of an outer metal pressure shell of zinc-coated steel sheet, one-inch thick acoustical blanket insulation, and an internal

perforated zinc-coated metal liner. Sufficient length of run shall be installed to obtain the insertion loss specified hereinbefore. The manufacturer shall certify that the insertion loss value specified will be obtained within the length of duct run provided. The outer sheet metal of the double-walled duct shall have welded seams to prevent water vapor penetration. The outer sheet of the duct and fittings shall conform to the metal thickness of high-pressure spiral and round ducts and fittings shown in SMACNA High Velocity Duct Construction Standards. The internal perforated zinc-coated metal liner shall be not less than 24 gage (0.0276-inch nominal thickness) with perforations not larger than 1/4-inch in diameter providing a net open area not less than 10 percent of the surface. All joints shall be sealed as specified hereinbefore for circular ducts. In lieu of perforated metal, rigid molded fiber glass inserts with the air side surface neoprene-coated, and complying with all requirements specified hereinbefore, may be provided inside a fabricated sheet metal duct. Duct sections shall be insulated, when required to prevent sweating.

4.3 Low-Velocity Ducts: Construction, metal gages, and reinforcements shall conform to SMACNA Low Velocity Duct Construction Standards, and NFPA 90A. Ductwork shall be air tight and shall not vibrate or pulsate when system is in operation. Ductwork shall be constructed of galvanized steel, aluminum or stainless steel. Change "SMACNA Low Velocity Duct" to "SMACNA Low Pressure Duct".

4.3.1 Curved elbows shall have a center line radius not less than 1-1/2 times the width or diameter of the duct.

4.3.2 Joints for ducts shall be made substantially air tight, and no dust mark from air leaks shall show at duct joints, or connections to grilles, registers and diffusers.

4.3.3 Laps at joints shall be made in the direction of air flow. Button punch or bolt connection in standing seams shall be spaced at fixed centers not greater than 6 inches. Horizontal locks or seams, known as "Button Punch Snap Lock" may be used in lieu of Pittsburg Lock, but will not be permitted on aluminum ducts.

4.3.4 Elbows, vaned elbows, take-offs, branch connections, transitions, splitters, duct volume dampers, fire dampers, flexible connections, and access door shall conform to recommendations of SMACNA Duct Construction Standards.

4.3.4.1 Backdraft dampers shall be galvanized steel or aluminum multi-blade type. Blades shall have felt strips riveted or crimped in place. Blades shall be joined together with connection bars. Each blade shall be rigidly attached to a pivot rod. The rod shall extend into oil-impregnated bronze bushings, or anti-friction bearings, located in the frames.

4.3.5 Acoustical Duct Lining:

4.3.5.1 Acoustical duct lining for low velocity system shall be flexible or rigid mineral fiber conforming to Specification HH-I-545. Lining shall not

be less than one inch thick, nominal, and where applicable shall be of sufficient thickness to be thermally equivalent to the thickness of insulation specified in section entitled "Insulation of Mechanical Systems". Duct size shown on drawings shall be increased to compensate for the thickness of the lining. Acoustical liner shall be provided where indicated on the drawings, and to the extent shown.

4.3.5.2 Application: The lining shall be applied in cut-to-size pieces attached to the interior of the duct with fire-resistant adhesive conforming to Specification MIL-A-3316, class 2. Top and bottom pieces shall lap the side pieces and in addition shall be secured with welded pins, clips, metal, nylon, or high impact plastic, and speed washers or welding cup-head pins on maximum 12 inch centers. Welded pins, cup-head pins or clips shall not distort the duct, burn through or mark the finish or the surface of the duct. Pins and washers shall be flush with the surface of the duct liner and all breaks and punctures of the duct liner coating shall be sealed with fire-resistant adhesive conforming to MIL-A-3316, class 1. All exposed edges of the liner at the duct ends and at other joints where the lining will be subject to corrosion shall be coated with a heavy brush coat of fire-resistant adhesive, MIL-A-3316, class 1, to prevent delamination of the glass fibers. The duct liner may also be applied to flat sheet metal with fire-resistant adhesive, MIL-A-3316, class 2, prior to forming duct through the sheet metal brake. The lining at the top and bottom surface of the duct shall be additionally secured by welded pins or adhered clips as hereinbefore specified for cut-to-size pieces.

4.4 Flexible Air Ducts: Flexible air ducts insulated for connections between risers, branch or trunk ductwork and air outlets, air terminals, shall be continuous, one piece with no intermediate joints. The flexible ductwork including connectors shall comply with the requirements of UL 181 Standards, class I, and NFPA 90A. The air duct shall be either the interlocking spiral or helically corrugated type constructed of zinc-coated steel, corrosion-resistant steel, or aluminum; or the air duct may be of the non-collapsible coated mineral base fabric type. Flexible duct insulation shall be flexible blanket or felt insulation in accordance with specification HH-I-558, and shall be one inch nominal thickness and density of 1-1/2 pounds per cubic foot. The insulation shall encase the flexible duct and shall be sheathed with moisture barrier having a permeability of not over 0.02 perm. Permeability shall be tested in accordance with ASTM E96, procedure C. Flexible ducts shall not exceed 12 feet in length and shall be supported by hangers every 3 feet unless supported by ceiling construction. Hanger assemblies shall be equivalent to hangers specified for rigid ductwork. Flexible ductwork shall be connected to ductwork, air mixing boxes, and air terminals by air-tight slip joints. Joints shall be secured with a pressure-sensitive vapor-seal adhesive tape or duct sealer with sheet metal screws. To prevent compressing insulation, a 2 inch long, flexible foamed closed cell plastic spacer the same thickness as the insulation shall be inserted over the liner and under the vapor barrier cover on the end fitting and secured with a stainless steel or zinc-coated metal clamp applied over the vapor coated, before assembly, with a cementing material that will prevent

delamination, air leakage, or erosion. Finish flexible ductwork installation shall not erode, delaminate or impart loose fibers or odors to the air stream in any manner when the system is operating at design conditions.

4.4.1 Flexible air duct working pressure for high velocity, medium and high pressure systems shall have a positive and negative working pressure rating of not less than 16 inches water gage.

4.4.2 Flexible air duct working pressure for low velocity, low pressure systems shall have a positive working pressure rating of not less than 2 inches water gage and a negative working pressure of not less than 1-1/2 inches water gage.

4.5 Kitchen Equipment Exhaust Ductwork (Entire Runs):

4.5.1 Kitchen grease exhaust air ductwork shall conform to NFPA Standard No. 96.

4.5.2 Ductwork concealed by furring or other construction shall be No. 16 U.S. gage or heavier steel.

4.5.3 Ductwork not concealed by furring or other construction and ductwork from dishwashers, potwashers and cartwashers shall be No. 18 U.S. gage or heavier Stainless Steel Fed. Spec. QQ-S-763 or Fed. Spec. QQ-S-766, Class 302, Condition "A" (annealed), Finish No. 4.

4.5.4 Joints and seams of ducts shall be made liquid-tight by continuous external welding and neatly made with smooth finish.

4.5.5 Where stainless steel is joined to other metals, all rivets, bolts, nuts, washers, and metal for welding or brazing, shall be corrosion-resisting metal.

4.5.6 Welding: Carbon-arc welding, or any form of welding permitting carbon pick-up will not be permitted. Spot welding shall not be substituted for full welding. Welding shall be heliarc or electric arc process. Welds shall be free from pits, runs, spatter, and other imperfections; shall be strong and ductile, and ground smooth and flush with joined surfaces.

4.6 Washer and Sterilizing Equipment Exhaust Ductwork (Entire Runs):

4.6.1 Ductwork shall be No. 18 U.S. gage or heavier Stainless Steel Fed. Spec. QQ-S-763 or Fed. Spec. QQ-S-766, Class 302, Condition "A" (annealed).

4.6.2 Joints and seams of ducts shall be made liquid-tight by continuous external welding and neatly made with smooth finish or with connecting flanges with gaskets.

4.6.3 Where stainless steel is joined to other metals, all rivets, bolts, nuts, washers, and metal for welding or brazing, shall be corrosion-resisting metal.

4.6.4 Welding: Carbon-arc welding, or any form of welding permitting carbon pick-up will not be permitted. Spot welding shall not be substituted for full welding. Welding shall be heliarc or electric arc process. Welds shall be free from pits, runs, spatter and other imperfections; shall be strong and ductile, and ground smooth and flush with joined surfaces.

4.6.5 Horizontal ductwork shall pitch downward to intake opening.

4.7 Fume Hood Exhaust Ductwork: Shall be fabricated from corrosion-resisting metal. Dampers, damper shafts and frames shall be acid resisting type with bearings of corrosion resistant materials combinations such as stainless steel and nylon or teflon, stainless steel and brass, or stainless steel and oil impregnated sintered bronze, as applicable for each specific installation.

4.7.1 Corrosion-Resisting Metal: Stainless steel Fed. Spec. QQ-S-766 or Fed. Spec. QQ-S-763, Class 316, Condition A (annealed) Mill Finish; (concealed metal) and Finish No. 4, Standard Polish (exposed metal) or, Fed. Spec. QQ-N-281 Monel and R-Monel. Where corrosion-resisting metal is joined to other metals, all rivets, bolts, nuts, washers, and metal for welding or brazing, shall be of corrosion-resisting metal. Welding shall be of heliarc or electric arc process.

4.7.2 Waveguide-Type Air Vents: Each inlet and return air ductshall be provided with a waveguide-type honeycomb air vent where it enters the shielded enclosure. Cores shall be fabricated of brass or steel, and each individual guide shall be electrically and mechanically bonded to all adjacent guides. Air vents shall be a permanent part of the shielded enclosure and shall have a shielding effectiveness equal to that of the total enclosure. Vents shall be sized as indicated and shall provide air at a velocity of 500 feet per minute with a pressure drop not to exceed 0.05 inch water gage. Each enclosure shall be provdied with a minimum of one each 12 inch square inlet and return waveguide-type air vents.

5. DIFFUSERS, REGISTERS, GRILLES AND TROFFERS: Diffusers, registers, grilles and troffers shall be factory-fabricated of steel or aluminum and shall distribute the specified quantity of air evenly over space intended, without causing noticeable drafts, air movement faster than 50 fpm in occupied zone, or dead spots anywhere in the conditioned area. The contractor shall be responsible for diffusion, spread, drop, and throw. If, according to the certified data of the manufacturer of the proposed units, the sizes indicated on the drawings will not perform satisfactorily, the units shall be reselected to perform quietly and effectively in accordance with the manufacturer's recommendations as approved by the Contracting Officer. A schedule of all air inlets and outlets shall be submitted to the Contracting Officer indicating location, types, specified air quantity, neck or face velocity, sound power

130 CFM
8 x 6

level values, pressure drop, throw and drop for registers, and maximum and minimum diffusion range for diffusers. The inlets and outlets shall be sound rated and certified in accordance with Air Diffusion Council Equipment Test Code Standard 1062R3, in sound power level, decibels reference 10^{-12} watt, in octave bands 2 through 8. All air devices shall be selected for sound pressure rating conforming to noise criteria curve NC-35. After the system is in operation, if drafts, dead spots, or excessive noise are noticeable in the conditioned spaces due to improper selection of type and size of diffuser, grille, or register, the unit shall be changed to the proper size and type without additional cost to the Government. Where the inlet and outlet openings are located less than 7 feet above the floor, they shall be protected by a substantial grille or screen in accordance with NFPA 90A.

5.1 Registers: Registers shall be provided with a factory fabricated volume damper furnished by the register manufacturer. Volume dampers shall be of the group-operated, opposed-blade type and shall be key adjustable. Volume adjustment shall be made by inserting key through face of register. Operating mechanism shall not project through any part of the register face, or if standard with the manufacturer, an automatically controlled device will be acceptable. Exhaust and return registers shall be constructed as specified for supply registers, except that they shall have a single set of nondirectional face bars or vanes having the same appearance as the supply registers. Registers shall be factory primed, ready for finish painting, and volume dampers and splitter assemblies if furnished, shall be factory finished in baked black enamel or other equally suitable finish.

5.2 Grilles: Grilles shall be constructed and finished as specified above for registers, except that volume dampers shall be omitted. Grilles, volume adjusters and air control devices of steel shall be zinc-phosphate treated, prior to priming and finishing.

5.3 Ceiling Diffusers: Ceiling diffusers shall be of the circular, square, rectangular, perforated face, perforated panel, satellite or linear type as indicated. The type of ceiling construction where the diffuser is to be installed shall determine the type of compatible diffuser ring or frame to be provided. Diffuser shall be sized in accordance with the recommendations of the manufacturer; sizes indicated on drawings are for guidance only. where modular layouts are shown, the term "partition" shall apply to any module line on which a partition may be built, whether a partition is actually shown or not. Transformations, etc., required to connect ducts shown to the diffusers selected shall be furnished without additional cost to the Government. Diffusers shall be equipped with baffles or other devices required to provide proper air distribution pattern. Factory fabricated turning vanes, furnished by the diffuser manufacturer, shall be provided at each diffuser, branch duct, or take-off, except where flexible ductwork is used. Vanes, except for linear diffusers, shall be installed so that they can be removed through the diffuser for access to the duct. Each diffuser shall be provided with a factory fabricated, single key, opposed blade volume damper constructed so that the required air flow can be obtained at any duct pressure not exceeding 1/2-inch water gage and without affecting the air distribution pattern. Volume damper

and separate pattern adjustment shall be provided by the diffuser manufacturer and shall be installed so that it can be removed through the diffuser-neck for access to the duct. Diffusers shall be constructed of steel or aluminum with all edges exposed to view, rolled or otherwise stiffened and rounded. All internal parts of each diffuser shall be removable as a unit to permit cleaning of the diffuser and provide access to the ducts. Removable parts shall be constructed so that they cannot be reassembled in any manner that will produce an incorrect air distribution pattern. The internal assembly shall be fastened so that it can be removed and reassembled without special tools. Diffusers used for exhaust or return shall be similar to diffusers used for supply, except that elements used solely for air pattern control shall be omitted. Return or exhaust portion of the diffuser shall be such that separate volume dampers can be field fabricated and installed in duct connections. Sheet metal air duct or plenum connection to diffusers shall be secured in accordance with manufacturer's recommendations.

5.3.1 Circular, Square, and Rectangular Diffusers: Each circular ceiling diffuser shall consist of two or more concentric circular elements designed to deliver air radially in a generally horizontal direction without excess smudging of the ceiling. Square and rectangular ceiling diffusers shall be square or rectangular as required to provide a suitable distribution pattern.

5.3.2 Perforated Plate Ceiling Air Diffusers: Diffusers shall be provided with adjustable one, two, three, or four-way air pattern controls and with perforated diffuser plates mounted flush with finished ceiling. Diffuser face plates shall not sag or deflect when operating under design conditions, shall be easy to remove with the use of simple hand tools, and shall be tightly held in place by concealed hinges or other type of concealed fasteners. Internal adjustable air pattern controls, air volume controls, and air turning devices shall be hinged and may be permanently attached to the diffuser shell. Diffuser frames exposed below finished ceiling shall be die-formed in a single round, or four-sided unit, or shall be fabricated as individual units with corner joints appearing as hair line cracks. Diffuser shells, frames, perforated face plates and all air volume controls and air turning devices shall be constructed of aluminum or steel and shall be finished with a baked-on flat enamel, or other equivalent finish. Color of finish for shells and other component parts shall be gray or off-white. Color of exposed frames and perforated face plates shall be selected by the Contracting Officer. In addition to the perforated diffuser plates shown or noted on the drawings or required for installation on duct openings shown or noted, the Contractor shall furnish an additional 10 percent of the number of each size plate furnished and store them in the building as directed.

5.3.3 Linear Air Diffusers: All joints between diffuser sections shall appear as hairline cracks. Diffusers shall be provided with alignment slots for insertion of key strips or with other concealed means to align all exposed butt edges of diffuser. Corner joints of steel frames, and flanges exposed below ceiling or side wall, shall be metal filled and ground smooth. Corner joints of aluminum frames and flanges exposed below ceiling or side wall shall

appear as hairline cracks with unexposed sides of corner joints welded or secured with alignment keys. Diffusers shall be furnished with separate pivoted or hinged adjustable air volume damper and separate air deflection blades. Air volume dampers shall be made adjustable without disturbing the air deflection blades setting. Volume and deflection blade sections shall have structural rigidity to operate uniformly over the entire length of the diffuser without bending, warping, buckling, or creeping during normal operation. Diffusers and all component parts shall be constructed of extruded aluminum or of steel and shall be finished with a baked-on enamel, or approved equivalent finish. Diffusers installed in plaster ceilings, shall be provided with plaster frames set flush with finished ceiling. Screws, bolts, etc., shall not be used in exposed face of diffusers' frame or flange. Linear diffusers composed of two or more continuous sections to make up the required length, shall have positive locating strips or other concealed means to assure proper alignment and exposed butt openings less than 0.050-inch. Linear diffusers shall be provided with plaster frames when mounted in ceiling or wall; butt joints of diffusers and plaster frames shall be staggered.

5.3.4 Exhaust Grille (Wire Mesh): Shall be aluminum, ASTM, B211, alloy 5056-H38, .064 inch minimum diameter, 1/2 inch square mesh, set in either extruded or tubular aluminum frame. Fasten frame to exhaust duct with aluminum screws. Install guard to allow removal and replacement without damage to adjoining items. Miter corners and join by concealed corner clips or locks extending about 2-1/4 inches into rails and stiles.

5.3.5 Operating Room, Delivery Rooms and Cystoscopy Room Air Distribution: In surgery areas special air distribution systems shall be installed comprised of the following components:

5.3.5.1 A continuous "Loop" distribution plenum with linear diffusers, encompassing the work area of the room, and a center section(s) plenum with a non-aspirating center panel(s) mounted therein.

5.3.5.2 All plenums shall be constructed of 18-8 stainless steel or anodized aluminum.

5.3.5.3 All duct corners shall be rounded with 3" radius for vertical corners and 3/4" radius for horizontal corners. Provide external clips for supporting assembly in place. Plenums to be sectionalized as required for transporting and handling, but with a minimum of sections assembled in place as one unit.

5.3.5.4 A stainless steel perforated static pressure plate shall be provided in all sections of the distribution plenum to provide equal air distribution over the diffuser face.

5.3.5.5 The linear diffusers shall be of the multiple slot, quick opening, removable face arrangement. Center panels shall be perforated plate, quicck opening, removable face arrangement. Construction shall be stainless steel with a satin finish. Frames shall be provided with plastering stops and

shall receive the removable faces in such a manner that the entire assembly of both the static pressure plate and the diffuser can be removed for sterilization of the plenum section.

1. The linear diffuser face shall contain a minimum of 2 slots, each with an adjustable air pattern. The air pattern shall be incrementally adjustable from the vertical $\pm 30^{\circ}$. The movable vanes or deflectors must not extend through the slot and must have the capability of being locked in place by section.

2. The design shall be pretested for performance. Performance shall be measured in a Certified Air Diffusion Council Laboratory in accordance with ADC Standard 1062-R3.

3. All possible precaution shall be taken in the design of the discharge components so that maximum sterilization from a maintenance standpoint may be obtained. In the design of the entire system care must be taken that every portion of the ductwork from the diffuser face to the face of the high efficiency filter shall be made available for manual sterilization when the room is decontaminated.

4. The supplier of the sterile hospital operating room systems shall provide factory personnel for supervising the adjustment and balancing of the air system.

5.3.6 Satellite Diffuser: Casing shall have a minimum of 24 gauge, zinc coated steel. Edges of discharge slot shall be formed over to provide a double material thickness. Exposed slot shall be painted with baked white enamel. Internal surface shall be acoustically and thermally insulated.

5.4 Air Handling Troffers: The air handling portion of the combination light and air handling troffer is specified herein. The lighting fixture portion is specified in section entitled "Lighting Interior". The air terminal and the light troffer manufacturers shall coordinate fit, performance, and installation requirements. A method of air balancing the supply troffer shall be provided which will be accessible for adjustment without requiring the removal of troffer components or ceiling panels after installation. Supply air shall be delivered in a uniform adjustable pattern along the entire length and/or width of the troffer. The return air handling section shall vent room air and attenuate room noise passing into the ceiling plenum. Return and supply air handling sections shall be interchangeable except that distribution plenums are not required for return sections discharging into the ceiling plenums. Appearance of return and supply troffers shall be identical when viewed from below ceiling. The static pressure required for the return air handling section shall be less than 0.03-inch of water gage. When returning air to the ceiling plenum, or when not connected to supply air, the troffer shall have a sound transmission class rating of not less than 40 when tested in accordance with the Air Diffusion Council Standard AD-63. Troffers shall conform to the requirements of Underwriters' Laboratories Electrical Construction Materials List for

Interchangeable Use, as cooled or heated air supply diffusers and/or return air units. Troffers shall be provided with round collars at least 2 inches long for connection to air ductwork. For each size and type of troffer, the following shall be submitted for approval: (a) performance data, (b) data showing coordination of fit, (c) statement that presence of air troffer will not impair life of electrical equipment. Air handling troffers shall be tested in accordance with Air Diffusion Council Code Test 1062R3, and field measurement techniques shall be based on same.

6. LOUVERS:

6.1 Louvers: Louvers in exterior walls are specified in section entitled "Exterior Wall Louvers".

6.2 Louvered Penthouse: Louvered penthouse shall be low-silhouette, curb mounted, dome type roof intake or exhaust unit equipped with waterproof top and rainproof louvers around the sides. The unit shall be of such size as to provide the net free area of the louvers indicated. Louvers shall be extruded aluminum designed to provide maximum resistance to the entry of rain while allowing the maximum air resistance. Each unit shall be provided with a removable roof constructed of not less than 0.081-inch thick aluminum sheet insulated with one inch thick glass fiber insulation with vapor barrier attached to underside of roof. Units shall be assembled and internally braced using not less than 2 x 2-1/8 inches aluminum angles, provided with curb tie downs. The entire assembly shall have been tested to withstand a 100 MPH wind force. Bolts or screws used in assembly shall be aluminum or stainless steel. The unit shall be provided with 1/2-inch aluminum mesh mounted on inside and aluminum curb flashing around curbs. All sides of louver shall be provided with a bird screen and frame. Frames shall be provided for screens. Frame shall be removable and shall be of extruded aluminum or stainless steel.

6.3 Closure Angles and Closure Plates: Provide 14 gauge aluminum closure plates (blank-offs) on inside of all exterior wall louvers in mechanical equipment rooms except those areas shown to be used for duct connections or damper connections to the louvers. Provide continuous closure angles and closure plates on inside at head, jambs and sill. Secure angles and plates to louver frames with screws and to masonry or concrete with anchor bolts. Fastenings shall be stainless steel or aluminum.

6.4 Insect Screens: Frame for galvanized steel duct or louver construction shall be galvanized steel designed to permit replacement of screening. Wire screening shall conform to Fed. Spec. RR-W-365, Type VI, Corrosion-resistant steel, 18 x 18 mesh, 0.009 inch diameter wire. Frame for screens for aluminum duct or louver construction shall be aluminum. Wire screen cloth shall conform to Fed. Spec. RR-W-365, Type VII, Aluminum Alloy 18 x 18 mesh, 0.011 diameter wire. Entire screen and frame shall be readily removable from duct. Provide airtight gasket for screen access panel.

6.5 Perforated Distribution Plate:

6.5.1 Provide perforated distribution plate upstream of each after filter to evenly distribute air across entire face area of filters.

6.5.2 Face area of distribution plate shall be same size as the total face area of the after filters.

6.5.3 Distribution plate shall consist of a 60% free area perforated plate made of 10 U.S. gage galvanized steel with round openings equally spaced over entire face area. Maximum air pressure drop through distribution plate for air volumes scheduled shall be 0.10" W.G.

7. FANS FOR FIELD ASSEMBLED AIR HANDLING SYSTEMS:

7.1 General: These requirements apply to fans which are not integral parts of cooling towers, air-handling units, and equipment designed as complete units by the manufacturer. Fans shall be guaranteed to deliver the specified air quantities at the specified pressures when tested in accordance with the requirements of Bulletin 210 of the Air Moving and Conditioning Association, Inc. (AMCA). All fans shall conform to AMCA Standard 99 and shall be statically and dynamically balanced and quiet in operation. All belt driven fans shall have safety guards and adjustable motor mounts for belt tension adjustment and belt replacement. Belt drives shall be V-belt conforming to specification ZZ-B-225. Belts and sheaves shall conform to the standards of Mechanical Power Transmission Association, Rubber Manufacturer's Association, and NEMA, the latter for minimum electric motor sheave diameter for a given horsepower motor. Motor sheaves shall be of the adjustable pitch type, selected so that the specified capacity will be delivered with sheaves at approximately mid-position. V-belt drives shall be selected for continuous duty and in conformity with the Standards of Mechanical Power Transmission Association and Rubber Manufacturer's Association. Fan and motor bearings and lubricant, motor insulation, and belts shall be suitable for the operating ambient temperature. Guard screens shall be provided over exposed fan inlets and/or outlets. All furnished parts of fans, such as shafts and bearings, where accessible shall be protected from rust prior to operation by means of wrappings and protective grease coatings. Sound power data information in all octave bands listed by center-frequencies for the unit fan or fans shall be submitted. The data shall apply to the minimum noise area of the performance curve. The sound power level values, decibels reference 10^{-12} watts shall be determined in accordance with AMCA Standard 300, Test Code for Sound Rating Air Moving Devices.

7.2 Centrifugal Fans: Performance curves shall be submitted for each centrifugal type fan to be installed. Fan curves shall show brake horsepower, static pressure and static efficiency plotted against air volume. Centrifugal fans shall have backward inclined blades or backward curve blades or backward inclined air foil blades. Fans shall be statically and dynamically balanced. Utility fan wheels and other type wheels less than 12 inches in diameter may have forward curve blades. Housings for fans having wheels smaller than 12 inches in diameter shall be made of steel. Flat portions of housings shall be braced, where necessary, to prevent vibration and provide support for

bearings. Housings for fans having wheels larger than 18 inch in diameter shall be provided with inspection openings and cover plates having pressure latches on the scroll sheets, located as nearly opposte the outlets as the aprons, etc., will permit. Height of inspection openings shall be 8 inches minimum for fans with wheels not over 36 inches in diameter and 12 inches minimum for all larger fans. Widths of inspection openings shall be not less than 12 inches. Inlet rings shall be formed to smooth curves to reduce turbulence. Large fan housings shall be made in sections to permit installation or removal through openings available in the building. Field joints shall be flanged and bolted. Wheels shall be assembled from die formed or molded parts and shall operate at all speeds up to 1.2 times the maximum speed specified by the manufacturer without noticeable static or dynamic unbalance, eccentricity or wobble. Where operating speed exceeds 90 percent of the maximum cataloged speed for a given fan, the fan selection shall be for the next highest (AMCA) fan class. Wheels shall be braced to resist torsional stresses due to air pressure and rapid acceleration. Fans with backward inclined blades and backward curve blades shall be designed to give the fans a continuously rising pressure characteristic and a non-overloading power characteristic. Fans with wheels having double curved blades and equipped with fixed inlet vanes, where required for proper selection will be accepted in lieu of either the backward inclined blades or backward or forward curved type. Automatic inlet vanes shall be provided as required. Bearings shall be self-aligning, with oil-retaining, dust-excluding seals at each end. Bearings shall be of the ring-oiled, babbitted, sleeve type with large oil reservoirs or of the ball or roller type. Inner races of ball and roller bearings shall be secured to the shafts by press fitting split taper sleeves, eccentric locking rings or set screws. Taper sleeve mounts shall be carefully adjusted so that bearings cannot slip on shafts and so that bearing will not be pre-loaded. Eccentric locking rings shall be securely tightened and retained by set screws. Bearings held by set screws only shall have two in each race and screws shall have points designed to provide a locking action on the shaft. Load ratings of ball and roller bearings shall be based on an average bearing life of not less than 100,000 hours when selected at the maximum cataloged speed for the unit, allowance being made for dead load of wheel and shaft and maximum pull of belts. Bearings shall be designed so that fill and drain plugs, pipe connections, etc., will be accessible after installation without dismounting any part. Bearings requiring oil lubrication shall be provided with oil reservoirs and sight glasses accessible in locations outside the ducts or casings and so constructed that their operation will not be affected by changes in air pressure and so that oil may be added while the fan is running without danger of over-oiling. Bearings requiring grease lubrication shall be equipped with accessible filling connections. Drain and flushing connections, shall also be accessible. Fans handling air that is abnormally hot or corrosive, such as exhaust from chemical fume hoods, shallhave both bearings opposite the inlet, and overhung wheels and sheaves. Double inlet fans and single inlet fans having wheels larger than 36 inches in diameter shall have two bearings, one on each side of the wheel, with overhung sheaves. Single inlet fans with sheels not over 36 inches in diameter may have bearings arranged as specified for larger fans, or bearings may both be located on the side opposite the inlet with overhung wheels. Where belts

cannot be changed without dismantling bearings, sheaves shall also be overhung. Fan wheels and insides and outsides of housings shall be given a factory coat of red lead paint.

7.3 In-Line Tubular Centrifugal Fans: In-line tubular centrifugal fans shall have welded tubular steel casings, centrifugal backward inclined blades, stationary discharge conversion vanes, internal and external belt guards and adjustable motor mounts. Inlet and outlet connections for fan casings to duct work and equipment casings, may be of the slip fit or flanged type. Where fan inlet is open to atmosphere or to a plenum chamber, a bell mouth (inlet cell) shall be provided. Guards shall be provided for inlets and discharges. Air shall enter and leave the fan axially. Inlet shall be streamlined and conversion vanes shall eliminate turbulence and provide smooth discharge air flow. Fan bearings and drive shafts shall be enclosed and isolated from the air stream. Fan bearings shall be mechanically sealed against dust and dirt and shall be permanently grease-lubricated, self-aligning, pillow block ball type. Motor and drive shall be provided by fan manufacturer.

7.4 Vaneaxial Fans: Vaneaxial fans may be either direct-connected with adjustable blade wheel or V-belt driven. When direct connected, they shall be driven by totally-enclosed, air-over (TEAO), flanged or end mounted motors. When belt-driven, internal and external belt guards and adjustable motor mounts shall be provided.

7.4.1 Motors: Motors shall have permanently grease-lubricated ball bearings; auxiliary lubrication and relief fittings shall be provided on outside of fan casing, grease lines being arranged to minimize pressure on bearing seals. Motor horsepower shall not be less than brake horsepower required with blades set at maximum pitch angle at any air delivery from the indicated amount down to 50 percent thereof.

7.4.2 Fan Wheel Blades: Fan wheel blades shall be air-foil type with guide vanes, and shall be designed to provide high efficiency and low noise level. The diameter of the fan hub shall be at least equal to that of the motor frame. Wheel blades of direct-driven fans shall be adjustable to permit varying the performance over a range of volume and pressure. The hub shall be indexed to facilitate setting the angle of the blades uniformly and accurately from minimum to maximum angle; stops shall be provided to avoid overloading motor. The fan nameplate data shall include the factory blade setting and the maximum setting for the motor furnished.

7.4.3 Fan Casings: Fan casings shall be cylindrical, of welded steel construction, and shall have flanged inlets and outlets. Guide vanes, and motor support shall be assembled by welding. Casings shall have bolted or hinged access plates adequate for inspection and servicing of internal parts.

7.4.4 Performance curves shall be submitted for at least five blade angles, including maximum and minimum settings. Curves shall show brake horsepower, mechanical efficiency, static pressure and total pressure plotted against CFM volume.

7.5 Propeller Fans: Propeller fans may be of either the direct-connected, motor-driven type or belt connected. Wheels shall have steel or aluminum blades with heavy hubs. Mounting rings or plates shall be cast or die formed to smooth curves where the air enters the wheels. Mounting plates shall prevent distortion and shall be turned up at all edges or braced with steel angles. Where the standard mounting ring or plate is not large enough to fit the opening provided, a field fabricated auxiliary mounting plate shall be provided. Field fabricated plates shall have turned up edges or steel angle reinforcing and shall be made of zinc-coated sheet steel of thicknesses not less than the following:

Wheel Diameter Inches	Plate Thickness M.S. Gage
12 and under	18 (0.0478 inch thick)
Over 12 and not over 16	16 (0.0598 inch thick)
Over 16 and not over 24	14 (0.0747 inch thick)
Over 24 and not over 36	12 (0.1046 inch thick)
Over 36 and not over 60	10 (0.1345 inch thick)

Shafts for fans not mounted directly on motor shafts shall be of steel and shall be accurately finished on all working surfaces. Bearings for fan shafts shall be self oiling with adequate oil reservoir or permanent life lubricated ball bearings. Shafts shall be supported by two self-aligning bearings except where fan wheels are mounted on extended motor shafts or on ball bearin hubs that rotate on fixed stub shafts. A wire mesh guard shall be provided and installed on fans when they are mounted so that any part of the wheel or belt drive is less than 7 feet above the floor. Each propeller fan shall be provided with a motor having a nameplate rating not less than the actual brake horsepower required to drive the fan with a static pressure 0.20-inches greater than the calculated value.

7.6 Power Roof Ventilators: Each power roof ventilator shall consist of a fan with a housing and weatherproof hood. The entire assembly shall be tested to resist a 100 mile per hour wind force. Fans shall be propeller or centrifugal type, V-belt driven or direct connected. Belt drives shall be rated for at least 150 percent of the motor nameplate horsepower. Bearings shall be permanently sealed grease lubricated ball or roller type. Fan discharge openings shall be provided with 1/2- by 1/2-inch wire mesh screen. Motors shall be provided with unfused safety electric power disconnect switch, mounted under the fan housing, adjacent to the motor. Thermal overload protection shall be provided in the operating electric disconnect switch located within the building. Housing shall be arranged to facilitate access for servicing and shall be made of corrosion-resistant metal or glass fiber reinforced high impact sunfast color plastic.

7.7 Shutters: Shutters for propeller fans and power roof ventilators shall be weatherproof motor operated or gravity type with angle iron or aluminum frames and aluminum leaves. Edges of leaves shall close tight to exclude wind and rain and arranged so that they will not retain water at

8.1 Water Coils: At the end of this paragraph add the following: "No means such as turbulators shall be used to increase the efficiency of the coils."

points where it can cause shutter to stick in freezing weather. Leaves shall operate together and shall stand parallel to the air stream when fully open. Power operating device for shutter shall be pneumatic actuator or electric actuator with necessary transformer. Operating current shall be taken from the fan motor circuit. Closing shall be by spring. Operating device shall be connected so that shutter will automatically remain open when the fan is running, and closed when fan is stopped. Actuators and transformers shall conform to section entitled "Temperature Controls".

7.8 Motors and Motor Starters: Motors and motor starters shall conform to NEMA MG-1 and NEMA ICS. Motors shall not exceed 1800 rpm, unless otherwise indicated and shall be open drip-proof enclosure or totally enclosed explosion proof type. Motor starters shall be manual, magnetic-across-the-line general purpose enclosure.

8. HEATING AND COOLING COILS:

8.1 Water Coils: Water coils shall be fin-and-tube type constructed of seamless copper tubes and copper or aluminum fins mechanically bonded or soldered or helically wound to tubes. Casing and tube support sheets, shall be 16-gage (0.0635-inch nominal thickness) galvanized steel, formed to provide structural strength. Tubes shall be correctly circuited for proper water velocity without excessive pressure drop and they shall be drainable where required or indicated on drawings. Each coil shall be tested at the factory under water at not less than 250 psi air pressure and shall be suitable for 200 psi working pressure. Coils shall be mounted for counter-flow service. Drainable coils shall be installed in the air handling units with a pitch of not less than 1/8-inch per foot of tube length toward the drain end. Coils shall conform to the provisions of ARI Standard 410. Water coil capacities, pressure drops, and selection procedures shall be certified in accordance with ARI Standard 410.

8.2 Steam Coils, Single Tube Type: Steam coils, single tube type shall be constructed of cast semi-steel, welded-steel, or copper headers, red-brass or copper tubes, and copper or aluminum fins mechanically bonded or soldered or helically wound to tubes. Tubes shall be rolled and bushed, brazed, or welded into headers. Coil casings and tube support sheets, with collars of ample width, shall be not lighter than 16-gage (0.0635-inch nominal thickness) galvanized steel, formed to provide structural strength. When required, multiple tube supports shall be provided to prevent tube sag. The fin tube and header section shall float within the casing to allow free expansion of tubing for coils subject to high pressure steam service. Coils shall be factory tested at 250 psi hydrostatic test pressure or under water at 250 psi air pressure and shall be suitable for 200 psi steam working pressure. Coils shall be test rated in accordance with ARI 410.

8.3 Steam Coils, Steam-Distribution (Nonfreeze) Type: Steam coils, steam distribution (nonfreeze) type shall be constructed of cast semi-steel, welded-steel, or copper headers, red brass or copper tubes, and copper or aluminum fins mechanically bonded or soldered or helically wound to tubes.

Tubes shall be rolled and bushed, brazed, or welded into headers. Condensing tubes shall be not less than 5/8-inch outside diameter. Distributing tubes shall be not less than 3/8-inch outside diameter, with orifices to discharge steam to condenser tubes. Distributing tubes shall be installed concentric inside of condenser tubes and shall be held securely in position. The maximum length of a single coil shall be limited to 120 times the diameter of the outside tube. Coil casings and tube support sheets, with collars of ample width, shall be not lighter than 16-gage (0.0635-inch nominal thickness) galvanized steel, formed to provide structural strength. When required, multiple tube supports shall be provided to prevent tube sag. The fin tube and header section shall float within the casing to allow free expansion of tubing for coils subject to high pressure steam service. Coils shall be factory tested at 250 psi hydrostatic test pressure or under water at 250 psi air pressure and shall be suitable for 200 psi steam working pressure. Coils shall be test rated in accordance with ARI Standard 410.

9. HUMIDIFIERS: Humidifiers shall be of the factory-assembled type. Humidifiers may be installed in single or multiple units as required to obtain the specified capacities.

9.1 Humidifiers, Steam Diffuser Type: Diffuser units shall be of a design that will separate any condensate from steam supply and provide positive drain of condensate to waste and supply dry steam only to air stream. Humidifiers may be installed on single or multiple units, all materials shall be constructed of non-corrosive materials 300 series stainless steel.

10. AIR FILTERS:

10.1 General: Air filters shall be used to intercept particulates from the air supply to the conditioned spaces. Filters shall be rated in resistance to air flow, arrestence and efficiency, dust holding capacity in removing test dust when operated at the indicated capacity. Filters shall be evaluated on the basis of National Bureau of Standards (NBS) Dust-Spot Method. Filters with efficiencies from 95 percent to 99.97 percent shall be rated by the DOP test. Filters shall be constructed so as to prevent passage of unfiltered air, using felt, rubber or neoprene gaskets where necessary. Steel filter parts shall be protected against corrosion by baked-on enamel, epoxy resin, zinc-coating, cadmium plating, two coats of oil paint, two coats of lacquer, or coated, with alkyd paint after phosphate cleaning. Each filter shall be provided with an identification plate, mounted where visible after construction, showing serial numer, model number and all other data necessary for ordering renewal media. Filters shall conform to the requirements of UL Standard 900 and shall be class 1, or class 2 filters, except high efficiency filters shall conform to UL Standard 586.

10.2 Replaceable (Throw-away) Filters: Replaceable (throw-away) filters shall conform to specification F-F-310 and shall be throw-away frames and media type, 2 inch thick, grade A, standard dust holding capacity. Holding frames shall be provided and shall be fabricated from not less than 16-gage. (0.0598-inch nominal thickness), sheet steel with rust inhibitor coating.

Each holding frame shall be equipped with suitable cell holding devices, and cell seats shall be gasketed. Where indicated or required filter bank shall be erected, and all joints shall be air tight.

10.3 Deep-cell type Air Filters: Deep-cell air filters shall be of the panel renewable, dry media type of the capacity indicated at face velocity not exceeding 500 fpm. The filtering media may be cellulose-fiber, cotton-linter, or synthetic-fiber material in thin sheets of onee or more plies. The media shall be supported the full length of the media by integral internal support mechanism or with external wire grid or basket against the flow of air and arranged so that the air is distributed evenly to all surfaces. Media supporters when used, shall be secured to supporting frames so constructed that the frame can be separated and reassembled easily to permit removal and renewal of the filtering media. Each filter section shall be provided with approved gaskets, as required, and approved means to secure filter section in the frame. Each filter shall be provided with a factory made sectional supporting frame constructed of not lighter than 16 gage (0.0598-inch nominal thickness) steel, treated with rust inhibitor, or 16 gage (0.063-inch nominal thickness) aluminum. Joints in the frame sections shall be welded or riveted and individual frames shall be bolted or riveted together to form the whole frame assembly. Upon completion of the erection of the filter frame assembly, the entire assembly shall be calked or gasketed during erection to prevent air bypass. Each filter, when tested at its specified rate of airflow with dust consisting of 96 percent by weight Cottrell precipitate and 4 percent cotton linters dispersed in the entering air at the rate of one gram per 1,000 cubic feet, shall have received not less than 275 grams of dust per 1,000 cfm of specified capacity, when the resistance to airflow has increased by 0.40-inch water gage. The average efficiency as tested by the Dust Spot Method, using atmospheric dust, as developed by the National Bureau of Standards, shall be not less than the percent shown on the drawing during the foregoing dust-loading test. The initial resistance at rated airflow shall not exceed the inch water gage shown on the drawing. Nominal depth of the filter shall be as indicated on the drawings. Prefilters of the throwaway type, 2 inches tick, shall be provided when indicated on the drawings, except when filters of 85 percent efficiency or higher are used prefilters shall be provided whether indicated or not. Mechanical loader and two spare cells per filter bank shall be provided if necessary for servicing filters.

10.4 Odor Control Filters, Charcoal Type: Charcoal type door odor control filters shall function to maintain the concentration of odorous gases in the air stream to an acceptable level, by absorption in porous activated carbon (charcoal). The filter shall consist of multiple cells, arranged in a factory fabricated, corrosion protected, framework with ample design strength and of rigid construction to support the type cells involved. Each cell shall contain trays retaining the activated carbon with means to prevent bypassing of the air. Activated carbon shall conform to specification MIL-C-13724.

10.5 High Efficiency Particulate (HEPA) Air Filters: High efficiency particulate air filters shall be individually tested and certified to have an efficiency of not lelss than the percent shown on the drawing when tested with

0.3 micron dioctylphathalate smoke in accordance with UL STD 586, and to have a static pressure drop of not greater than one inch water gage when clean and when operating at rated capacity in air at 70 degrees F. High-efficiency filters 99.97 percent efficiency shall be listed under label service of Underwriters' Laboratories, Inc. Filters shall be equipped with gaskets and constructed by pleating a continuous sheet of filter medium into closely spaced pleats separated by corrugated inserts, or by honeycomb design construction of the pleated filter medium. Filter medium and adhesive sealers shall conform to UL 586. Overall frame dimensions shall be correct to 1/16-inch, and squareness shall be maintained to within 1/8-inch. Installation of the filters in the weatherproof casing shall be given special attention to insure a tight fit, and all joints shall be well made to insure a positive seal. Filter frame retainers shall be designed to be joined together to form a filter bank with airtight joints. The air capacity and the nominal depth of the filter shall be as indicated on the drawings. Prefilters of the throwaway type, 2 inches thick, shall be provided, as indicated in paragraph replaceable filters.

10.6 Manometers: Inclined-type manometers shall be provided for all filter stations of 2,000 cfm capacity or more including filters furnished as integral parts of air-handling units and filters installed separately. Manometers shall be of sufficient length to read at least one inch of water column, shall be graduated in 1/10-inches, and shall be equipped with spirit level. Each manometer shall be equipped with over-pressure safety traps to prevent loss of oil, and two three-way vent valves for checking zero setting.

11. FACTORY FABRICATED AIR HANDLING UNITS: Factory fabricated air handling units shall conform to ARI Standard 430. Units shall consist of an assembly of casings containing components and accessories indicated or specified herein. Units shall be single zone, multi-zone, or double-deck type. Arrangement and pressure rating of the air handler shall be as indicated on the drawings. The sound power data information in all octave bands listed by mid- frequencies for the unit fan shall be submitted. The data shall apply to the minimum noise area of the performance curve. The power level values, decibels reference 10^{-12} watt, shall be obtained in accordance with AMCA Bulletin 300.

11.1 Casings: Casings shall be constructed of steel, galvanized steel, or aluminum and designed to withstand the operating pressure. All panels and access doors shall be easily and quickly removable for inspection and accessible to all internal parts. Surface of steel parts which are not zinc-coated or aluminum and surfaces exposed to the weather shall be corrosion protected by a painting or coating system as specified in paragraph entitled Corrosion Prevention. Casings shall be provided with adequate reinforced points of supports for either the setting or hanging of the unit. Joints shall be made airtight.

11.2 Single zone units shall include fan section, coil section, adjustable fan motor mounting, and drain pan; units shall be arranged to draw air through filter and coil passes.

11.3 Double deck units shall consist of fan section, coil section, adjustable fan motor mounting and drain pan. Double deck units shall be provided with diffuser section, damper section, zoning dampers and balancing plate to equalize resistance through cooling and heating passes. Unit shall be arranged to blow air through cooling sections and heating coil sections in parallel.

11.4 Drain Pans: Drain pans shall be provided under the cooling coil section and humidifier section and shall be adequate to catch all condensate leaving the coil at highest published face velocity. Drain pan shall have not less than one drain connection at low point in drain pan.

11.5 Insulation: Insulation shall be applied in sufficient thickness and density to prevent condensate from forming on the unit casing from air entrance at coils to air outlet of unit, including framing angles exposed to air stream. Insulation shall meet the requirements of NFPA Standard 90A and be protected against deterioration and delamination from air currents. Casings shall not be insulated internally but externally. Condensate drain pan shall be insulated with water impervious insulation sprayed or foamed-in-place type with sufficient thickness to prevent condensate formation on the exterior at ambient conditions to be encountered.

11.6 Fan Sections: Fans shall conform to AMCA 210 and shall be forward curved or backward inclined centrifugal type specifically designed and suitable for the operating pressure. Fans shall be provided with adjustable motor base and mounting base with locking device to secure base on proper position. Fans shall be provided with adjustable pitch pulley; pulleys shall be selected at approximate mid-point of the adjustable range. Fan shafts shall not pass through their first critical speed when unit comes up to rated RPM. All units shall have grease lubricated fan bearings with externally accessible fitting for lubrication. Fan assemblies shall be statically balanced in the fan housing and final assembly.

11.6.1 Fan motors and motor starters shall conform to NEMA MG-1 and NEMA ICS and shall have or totally enclosed motors exposed to weather enclosures. Motor starters shall be magnetic across-the-line with general purpose (interior) watertight (where exposed to weather) enclosure.

11.7 Coil Sections: All heating and cooling coils shall be contained within a common or individual casing as required. The coil section shall be designed to permit coils to be removable and shall have baffles to prevent air by-pass around coils. Cooling coil sections shall have condensate pans and drain connection of sufficient size to remove coil condensate. The casing and drain pan shall be insulated as specified under Insulation above. Where reheat coils are funished, provisions shall be made to allow simultaneous dehumidification and reheating at maximum published cooling face velocity.

11.7.1 Heating and cooling coils shall conform to ARI Standard 410, and to paragraph entitled Heating and Cooling Coils. Coils shall be of type as indicated on the schedule.

11.8 Filter Boxes: Filter boxes shall be provided with either hinged access doors or removable panels at both ends. Filters shall be of type as indicated on the drawings and shall conform to paragraph entitled Filters, Air.

11.9 Mixing Boxes: Mixing boxes shall be of physical size to match the basic unit and shall include equal sized flanged openings, each sized to handle full air flow. Arrangement of openings shall be as indicated. Where shown on the drawings openings shall be provided with dampers of opposed blade type. All damper shafts shall be connected together by one continuous linkage bar. Dampers shall be arranged for automatic operation and shall be arranged so that when one starts to close from its opened position, the other starts to open from its closed position. Combination mixing box and pre-filtere shall be designed to hold 2" throw away filters. Filters shall be of type as indicated on the schedules and shall conform to paragraph entitled Filters, Air.

11.10 Corrosion Protection: Units shall be treated with a painting or coating system conforming to paragraph entitled Corrosion Prevention.

11.11 Face and By-Pass Dampers shall be a single assembly unit and attached to unit casing. All dampers of opposed blade type shall rotate on rustproof nylon bushings. The bypass duct for face and external by-pass on cooling units shall be insulated.

11.12 Vibration Isolators:

11.12.1 Types of Isolators:

11.12.1.1 Type of isolation, base and minimum static deflection shall be as required for each specific equipment application as recommended by isolator or equipment manufacturer but subject to minimum requirements indicated in the following Equipment Vibration Isolation Schedule.

11.12.1.2 Static Deflection: Vibration isolators shall have minimum static deflection as outlined in Equipment Vibration Isolation Schedule, this Section.

11.12.1.3 No metal-to-metal contact will be permitted between fixed and floating parts.

11.12.1.4 Color code isolator by type and size for easy identification of capacity.

11.12.1.5 Provide heat shields where elastomers are subject to high temperatures.

11.12.1.6 Lateral Motion: Vibration isolation system shall have a maximum lateral motion under equipment start up and shut down conditions of 1/4 inch. Restrain excess motion by spring type mountings.

11.12.1.7 Exposure to Weather: Isolators, including springs, exposed to weather shall be hot dipped galvanized after fabrication. Hot dipped zinc coating shall be not less than 2 ounces per square foot by weight complying with ASTM A123. In addition, provide limit stops to resist wind velocity.

11.12.1.8 Uniform Loading: Select and locate isolators to produce uniform loading and deflection even when equipment weight is not evenly distributed.

11.12.1.9 Provide factory fabricated air-handling units installed in two sections with flexible connections between fan and motor section and adjacent section, with isolation selected for specific requirements of vibrating section. Provide horizontal thrust restraints for cabinet fans as shown on the drawings. Horizontal restraints shall be spring type with neoprene pad attached at the centerline of thrust and symmetrically on either side of unit.

11.12.2 Floor Mountings:

11.12.2.1 Double Deflection Neoprene: Shall be oil resistant neoprene and include neoprene covered steel support plates (top and bottom), friction pads, and necessary bolt holes. Isolators shall be straight-line deflection curve type and be designed to support loads up to 50 pounds per square inch.

11.12.2.2 Spring Isolators: Shall be free-standing, laterally stable and include acoustical friction pads and leveling bolts. Isolators shall have a minimum ratio of spring diameter-to-operating spring height of 1.0 and an additional travel to solid equal to 50% of rated deflections.

11.12.2.3 Spring isolators with Vertical Limit Stops: Shall be similar to Spring Isolators, preceding, except a vertical limit stop shall be included to limit upward travel if weight is removed and also to reduce movement due to wind loads. Provide clearance around restraining bolts to prevent mechanical short circuiting.

11.12.2.4 Pads, Washers and Bushings: Pads shall be felt, cork, neoprene waffle, neoprene and cork sandwich, neoprene and steel waffle, or reinforced duct and neoprene. Washers and bushings shall be reinforced duck and neoprene.

11.12.3 Hangers:

11.12.3.1 Neoprene: Vibration hanger shall contain a double deflection type neoprene isolation element having a straight-line deflection curve. These isolators may be used only where there is a little or no structural vibratin and act mainly as a noise suppressor.

11.12.3.2 Spring: Vibration hanger shall contain a coiled steel spring in series with a neoprene grommet. Spring shall have a diameter not less than 0.8 of compressed operating spring height. Spring shall have a minimum additional travel of 50 percent between design height and solid height. Spring shall permit a 15 degree angular misalignment without rubbing on hanger box.

11.12.3.3 Combination Neoprene and Spring: Vibration hanger shall contain in series. Spring shall have a diameter not less than 0.8 of compressed operating spring height. Spring shall have a minimum additional travel of 50 percent between design height and solid height. Spring shall permit a 15 degree angular misalignment without rubbing on hanger box.

11.12.4 Bases:

11.12.4.1 Rails: Shall be designed with isolator brackets to reduce mounting height of equipment and cradle machines having legs or bases that do not require a complete supplementary base. To assure adequate stiffness, height of members shall be a minimum of 1/12 of longest base dimensions but not less than 4 inches. Where rails are used with neoprene mounts for small fans or close coupled pumps, extend rails to compensate overhang of housing.

11.12.4.2 Integral Structural Steel Base: Shall be designed with isolator brackets to reduce mounting height of equipment which require a complete supplementary rigid base. To assure adequate stiffness, height of members shall be a minimum of 1/12 of longest base dimension, but no less than 4 inches.

11.12.4.3 Common Foundation: Mount each electric motor on same foundations as driven machine. Hold driving motor and driven machine in positive rigid alignment with provision for adjusting motor alignment and belt tension. Bases shall be level throughout length and width. Provide shims to facilitate pipe connections, leveling, and bolting.

EQUIPMENT VIBRATION SCHEDULE

Type of Equipment	Disturbing Frequency	Isolator Type	Min. Static Deflection Inches
Suspended Units	Thru 5 HP	H	1.0
	Over Over 5 HP 500 RPM	H	1.0

Air Handling Equipment AHU & H&V Units Below 5" W.C. Fan Pressure	Floor Mtd. Units	Thru 5 HP	S	1.0
		Over 5 HP	S-B	1.0
Air Handling Equipment AHU & H&V Units Above 5" W.C. Fan Pressure	Floor Mtd. Units	Over 500 RPM Thru 30 HP	S-B	2.0
Centrifugal Blowers		Thru 5 HP	S-B	1.0
		7 1/2	S-B	2.0
	Suspended	Type H isolator with deflections specified above for centrifugal blowers.		
Tubular Centrifugal & Axial Fans	Floor Mounted Arrangement 9	Type S-R with deflections specified above for centrifugal blowers.		
	Floor Mounted Arrangement 1	Type S-B with deflections specified above for centrifugal blowers.		
Utility Sets	Suspended Unit	Type H isolator with deflections specified above for centrifugal blowers but not to exceed 2.75".		
	Floor Mounted	Type S-R with deflections specified above centrifugal blowers but not to exceed 2.75".		

Equipment Vibration Isolation Schedule Designations

S - Spring type isolators (floor mounted equipment).
H - Hangers, spring and neoprene type unless otherwise noted (ceiling suspended equipment).
B - Integral structural steel base.
R - Rails

12. AIR TERMINAL UNITS:

12.1 General: Air terminal units shall be performance tested in accordance with Air Diffusion Council Test Code 1062R3. Lining materials shall meet the requirements of NFPA 90A. Each unit shall consist generally of a sound-attenuation box, volume controller, air mixing devices, static pressure regulator, and other items as required.

12.2 Sound Power Levels: Decibels reference 10^{-12} watt shall not exceed the following values in each octave band at the mid-frequency cycles per second:

APPLICATION	OCTAVE BANDS 3	4	5	6	7
Mid-Frequency	250	500	1000	2000	4000
Office Space, Class Rooms, and Clinics	51	49	45	44	41
Libraries, Hospital Rooms, Conference Rooms, Communication Facilities	48	45	43	41	36
Shops, Mess Halls	65	61	59	57	55

12.3 Enclosure: Enclosure shall be constructed of zinc-coated steel not lighter than 20 gage (0.0396-inch nominal thickness) or aluminum not lighter than 18 gage (.0403-inch nominal thickness). The casings shall be provided with substantially flush access panels fitted tightly to prevent leakage of air and shall be sufficiently large for free access to all moving parts and to allow inspection, maintenance, and adjustment.

12.4 Reheat Terminal Unit: Reheat terminal units shall be provided with an external reheat coil, to operate on hot water. Coils shall conform to paragraph entitled "Heating and Cooling Coils".

12.5 Dual-duct Air Terminal Units: Dual-duct constant volume air terminal units shall be capable of proportioning the quantities of warm and cool air in response to the demands of the thermostat in the conditioned space. Leakage through the closed valves shall not exceed 3 percent of

maximum rated air volume with 6 inches static pressure on the closed inlet. Valve shall be insulated to prevent condensation. Means to prevent air-stratification at the outlet(s) shall be provided in the dual-duct air terminal unit. The average temperature difference across the discharge of the dual-duct air terminal unit shall not exceed 5 percent of the difference between the temperatures of the cold and warm air entering.

12.6 Dual duct VAV air terminal units shall be similar to dual duct constant volume except the following:

12.6.1 Variable air volume operator shall be selected so that the primary air volume is reduced to its minimum before the cold valve begins to close and the hot valve begins to open.

12.6.2 Variable Volume regulator shall consist of aluminum and coated steel frame, with two sets of extruded aluminum vanes, stainless steel adjusting spring and neoeprene pulsation snubbers. Regulator shall be factory set for an air capacity within ±5% of the specified maximum and minimum valve regardless of variation in inlet static pressure.

12.7 Constant-volume Regulator: Constant volume regulator shall limit the delivered air flow variation to not over plus or minus 5 percent when subjected to inlet pressure variations from one inch to 6 inches water gage. The air volume delivery may be factory-preset or field-adjusted to the quantities indicated on drawings. The regulator shall be provided with calibrated cubic feet per minute dial adjustment. Units with heating coils shall conform to paragraph entitled "Heating and Cooling Coils".

12.8 Variable Air Volume Terminal Units: Units shall consist of control boxes, and/or control terminal boxes. Unit casings shall be constructed of zinc-coated steel, and all exterior surfaces shall be protectively finished to prevent corrosion. All interior surfaces shall be acoustically and thermally insulated with glass fiber insulation, surface treated to prevent erosion. Insulation shall be UL approved and shall meet NFPA 90A. Edges of discharge slots shall be formed to provide a double material thickness, and exposed portions of slot shall be painted with additional coat of white enamel.

12.8.1 Air Volume Modulation Device: A damper or other means of modulating air volume shall be specifically designed for the terminal unit and shall be factory mounted by the manufacturer of the unit.

12.8.2 Damper Operator: Controls shall be electric or pneumatic and shall modulate airflow from indicated maximum to minimum volume. Motors shall be mounted on a common teflon coated shaft, and drive couplings shall be constructed of stainless steel with nylon thrust bearings. Motors shall be permanently lubricated and comply with UL requirements.

12.8.3 Maximum and Minimum Air Volume Control: Maximum and minimum air volume control shall be provided where indicated on the schedule for adjustment to any CFM setting shown on the CFM indicator. The maximum and

minimum air volume control shall be enclosed in a zinc-coated cover, shall be factory mounted and wired, and the maximum CFM shall be set at the factory. Unit mounting channel when required, shall be provided by the Variable Air Volume Unit Manufacturer.

12.8.4 Air Distribution Devices: Conditioned air shall be distributed to the occupied space through a linear, slot or satellite type, air distribution terminal of length and discharge direction as shown on drawings.

13. AIR TO AIR HEAT EXCHANGER, COIL RUN AROUND TYPE: Coil run around heat exchangers shall be installed where shown on the drawings. These systems shall consist of a coil in the exhaust air stream and one in the outside air intake stream. Coils shall be as specified in the paragraph entitled "Heating and Cooling Coils". Inter-connecting pipe shall be sized as shown on the drawings. Pumps shall be inline circulator type. The expansion tank shall be as specified under section entitled "Hot Water Heating System". Sizes of all components shall be as shown on the drawings. The systems shall be charged with an alcohol type non-freeze solution.

14. FAN AIR CURTAIN shall conform to specification W-F-001350. Unit shall be provided with angle adjustment features and intake port dampers.

15. DUCT HEATERS:

15.1 General: Duct heaters shall be of packaged design arranged for inserting in and connecting to air duct so heating elements are directly in the air stream. Sheet metal transformations shall adapt the available duct heater dimensions to the duct dimensions. Duct heaters shall have low air pressure drop at nominal air flow rate.

15.2 Hot Water Duct Type Heaters: Heaters shall conform to paragraph entitled "HEATING AND COOLING COILS".

16. ELECTRIC UNIT HEATER:

16.1 General: Furnish and install electric suspended unit heaters of the size, capacity and voltage specified on the drawings. Heaters shall be listed under the Underwriters' Laboratories, Inc.

16.1.1 Enclosures shall be fabricated from heavy gauge zinc-coated steel finished in high gloss beige enamel. Unit to have adjustable louver cone diffuser on the front of horizontal heater and to have adjustable horizontal louvers on the front of vertical heaters. Enclosures shall contain heating elements and contactors, and control transformers where required. Heater and supply wiring diagram shall be attached permanently to the inside of access door. Motor shall be mounted on a heavy gauge formed wire protection guard and mounted on the rear of the enclosure.

16.1.2 Elements shall consist of helically coiled nickel chromium alloy resistance wire embedded and completely surrounded in magnesium oxide,

enclosed and swedged into corrosion-resistant sheaths to which are permanently attached corrosion-resistant steel fins. Element assemblies shall be circular in shape and shall be enclosed in a closely fitting cylinder creating a pressure chamber to assure uniform air flow.

16.1.3 Motors shall be totally enclosed industrial rated, single phase, shaded pole, permanently lubricated and equipped with thermal overload protection with automatic reset.

16.1.4 Fan Blades shall be of the axial flow type designed for high efficiency and quiet operation. Fan speed shall not exceed 1750 rpm.

16.1.5 Thermal Overload Protection: All heaters shall be equipped with a manual reset thermal cutout which disconnects elements and motors in the event normal operating temperatures are exceeded.

16.1.6 Wiring: Heaters shall be designed for a single supply circuit, with elements, motor and control circuits subdivided and fused to conform to the National Electrical Code and Underwriters' Laboratories, Inc. Standard 573-1968.

16.1.7 Controls: Contactors and control circuit transformers shall be factory assembled and wired only direct line supply and thermostat connections required in the field.

17. INSTALLATION:

Change "High and Low Velocity Duct" to "High and Low Pressure Duct".

17.1 General: The installation of the air supply and distribution system shall conform to NFPA 90A and to SMACNA High and Low Velocity Duct Construction Standards. Mounting and supporting of ducts, equipment, accessories, and appurtenances shall be provided, including but not limited to structural supports, hangers, vibration isolators, stands, clamps and brackets, access doors, and dampers. Installation of equipment shall conform to equipment manufacturer's recommendations, unless otherwise indicated. Equipment shall be installed, leveled, and shall be located so that working clearance is available under overhead lines and that working space is available for all necessary servicing such as shaft removal, replacing or adjusting drives and motors, lubrication, and access to automatic controls. Electric isolation shall be provided between similar metals for the purpose of minimizing galvanic corrosion.

17.2 Electrical Work: Electric motor driven equipment specified herein shall be provided complete with motors and controls. Electrical equipment and wiring shall be in accordance with section entitled "INTERIOR WIRING SYSTEMS". Manual or automatic control and protective devices required for the operation herein specified and any control wiring required for controls and devices but not shown on the electrical plan shall be provided.

17.3 Ductwork Installation:

17.3.1 Elbows, vaned elbows, take-offs, branch connections, transitions, splitters, duct volume dampers, fire dampers, flexible connectors, and access doors shall conform to SMACNA Duct Construction Standards.

17.3.2 Duct shall be installed so that ductwork shall operate without chatter, vibration, and be air tight so that no dust marks from air leaks will show at connections or outlets.

17.3.3 Field Changes to Ductwork: Changes such as those required to suit the size of factory fabricated equipment actually furnished shall be designed to minimize losses in pressure and performance due to sudden expansion and contraction. Transitions shall be used in field changes as well as modifications to connecting ducts.

17.3.4 Splitters and Dampers: Dampers shall have accessible operating mechanism, and where operators occur in finished portions of the building, operators shall be chromium plated with all exposed edges rounded. Splitter dampers shall be operated by quadrant operators or 3/16-inch rod brought through the side of the duct with locking setscrew and bushing. Two rods are required on splitters over 8 inches. Manual volume-control dampers shall be operated by locking-type quadrant operators. Dampers and splitters shall be two gages heavier than duct in which installed. Unless otherwise indicated, multileaf dampers shall be opposed-blade type with maximum blade width of 12 inches. Access doors or panels shall be provided for all concealed damper operators and locking setscrews. Unless otherwise indicated, the locking-type quadrant operators for dampers, when installed on ducts to be thermally insulated, shall be provided with stand-off mounting brackets, bases or adapters to provide clearance between the duct surface and the operator not less than the thickness of the insulation. Stand-off mounting items shall be integral with the operator or standard accessory of the damper manufacturer. Volume dampers shall be provided where indicated on the drawings.

17.3.5 Air Deflectors: Air deflectors shall be provided in all square elbows, duct-mounted supply outlets, takeoff or extension collars to supply outlets, and tap-in branch-takeoff connections. Air deflectors shall be factory-fabricated and factory- or field-assembled units consisting of curved turning vanes or louver blades for uniform air distribution and change of direction with minimum turbulence and pressure loss. Square elbows shall be provided with curved vanes. Air deflectors on high-pressure systems shall be provided where indicated on the drawings.

17.3.6 Fire Dampers: Fire dampers shall be provided in all ducts penetrating fire walls and where duct systems serve two or more floors in accordance with the National Fire Protection Association Standard No. 90A. Dampers shall be installed with sufficient tension to prevent rattling or vibration. Fire dampers shall conform to the requirements of Underwriter's Laboratories, Inc.

17.3.6.1 Smoke Dampers: Smoke damper shall conform to section entitled "Temperature and Humidity Controls".

17.3.7 Duct Access Doors: Hinged doors shall be provided at all automatic dampers, fire dampers, coils, thermostats, temperature controllers, and other apparatus requiring service and inspection in the duct system. Doors shall be 15 by 18 inches unless otherwise indicated. Where size of duct will not accommodate this size, the doors shall be made as large as practical. Doors not less than 24 by 24 inches shall be provided on each side of each air handling unit. Doors shall be rigid, and shall be provided with airtight felt gaskets. Doors shall be provided with galvanized hinges with bronze pins and two approved brass fasteners. Doors 24 by 24 inches or larger shall be provided with fasteners operable from both sides. Doors in insulated ducts shall be of the insulated type. Unless otherwise indicated, doors shall so swing that fan pressure or suction holds the door closed.

17.3.8 Duct Sleeves and Prepared Openings: Duct sleeves shall be provided for all round ducts 15 inches diameter or less passing through floors, walls, ceiling or roof and shall be installed during construction of the floor, wall, ceiling, or roof. Round ducts larger than 15 inches diameter and all square and rectangular ducts passing through floors, walls, ceilings or roof shall be installed through prepared openings. The contractor shall be responsible for the proper size and location of sleeves and prepared openings. Duct sleeves and prepared openings shall be provided for all duct mains and duct branches. Branch take-off connections to grilles, registers, and diffusers shall be in accordance with SMACNA High Velocity and Low Velocity Duct Construction Standards.

17.3.8.1 Duct Sleeves: Duct sleeves shall be fabricated from 20 gage (0.0396-inch nominal thickness) galvanized sheet steel, unless otherwise indicated. Where sleeves are installed in bearing walls or partitions, black steel pipe, Schedule 30, 40, or standard weight shall be used. Sleeve shall provide one inch clearance between the duct and the sleeve or one inch clearance between the insulation and the sleeve for insulated ducts, except at grilles, registers, and diffusers.

17.3.8.2 Prepared Openings: Prepared openings for round ducts larger than 15 inches in diameter and for all square and rectangular ducts shall provide one inch clearance between the duct and the opening or one inch clearance between the insulation and the opening for insulated ducts, except at grilles, registers, and diffusers.

17.3.8.3 Closure Collar: Closure collar of galvanized sheet-metal not less than 4 inches wide, unless otherwise indicated on the drawings, shall be provided on each side of walls or floors where sleeves or prepared openings are provided except where grilles, registers, or diffusers are installed. The collar shall be installed tight against the surface. The collar shall fit snugly around the duct or insulation. The sharp edges of the collar installed around insulated duct shall be ground smooth to preclude tearing or puncturing the insulation covering or vapor-barrier. Collars for round ducts 15 inches

in diameter or less shall be fabricated from 20 gage (0.0396-inch nominal thickness) galvanized steel. Not less than 4 nails shall be used to attach collars where the opening is 12 inches in diameter or less, and not less than 8 nails shall be used where the opening is 20 inches in diameter or less. Collars for square and rectangular ducts with a maximum side of 15 inches or less shall be fabricated from 20 gage (0.0396-inch nominal thickness) galvanized steel. Collars for round, square, and rectangular ducts with minimum dimension over 15 inches shall be fabricated from 18 gage (0.0516-inch nominal thickness) galvanized steel. Collars shall be installed with nails on maximum 6 inch centers.

17.3.8.4 Space between the sleeve or opening and the duct or duct insulation shall be packed with commercial-grade twisted asbestos yarn.

17.4 Duct Supports: Duct supports shall be not less than two one inch by 1/16-inch thick galvanized strap-iron hangers spaced one on each side of duct in accordance with SMACNA High Velocity and Low Velocity Duct Construction Standards. Risers on high-velocity ducts shall be anchored in the center of the vertical run to allow ends of riser to move due to thermal expansion. Supports on the risers shall allow free vertical movement of the duct.

17.4.1 Ducts shall be supported and installed so as to be completely free from vibration under all conditions of operation. Supports shall be attached only to structural framing member and concrete slab. Supports shall not be anchored to metal decking unless a means is provided and approved for preventing the anchor from puncturing the metal decking. Where supports are required between structural framing members, suitable intermediate metal framing shall be provided. Where C-clamps are used, retainer clips shall be used.

17.5 Flexible Air Ducts: Flexible air ducts shall be stretched to smooth out internal corrugations and long radius elbows shall be used where possible using a minimum length required to make connections.

17.6 Access Panels: Access panels shall be provided for all concealed valves, controls, dampers, duct access doors, and any item requiring inspection and maintenance. Access panels shall be sufficient size and shall be as specified in section entitled "MISCELLANEOUS METAL".

17.7 Air Filters: Air filters shall be installed so that access space for servicing the filters is provided. Filters shall be installed with suitable sealing to prevent bypassing of air.

17.8 Inspection Plates and Test Holes: Inspection plates and test holes where required in ductwork or casings for air balance measurements shall conform to SMACNA Ductwork Construction Standards. Test holes shall be a factory fabricated, air-tight, noncorrosive test hole with screw cap and gasket. Cap shall be extended through insulation.

17.9 Flexible Collars: Flexible collars shall be provided in connections between fans and ducts or casings and where ducts are of dissimilar metals, as indicated and where required. Collars shall be made of neoprene coated glass fabric weighing approximately 30 ounces per square yard. Flexible connections shall be securely fastened by zinc coated iron clinch-type draw bands for round ducts. For rectangular ducts the flexible connections locked to metal collars shall be installed using normal duct construction standards.

17.10 Flashings: Where ducts pass through exterior building walls and roofs, flashings shall be cleaned of rubbish, plaster, dirt and any other debris. After installation of equipment and connections are made on fan, and before any grilles, outlets or registers are installed, entire system shall be blown out with dampers and outlets wide open.

17.11 Cleaning of Duct System: After completing installation of ductwork, entire system shall be cleaned of rubbish, plaster, dirt and any other debris. After installation of equipment and connections are made on fan, and before any grilles, outlets or registers are installed, entire system shall be blown out with dampers and outlets wide open.

17.12 Drain Pans, Drain Connections, and Drain Lines: Drain pans, drain connection, and drain lines shall be provided for all coils to drain the water condensed from the air stream by the cold coil surface. Where coils are sectionalized, with one section installed above the other, intermediate drain pans shall be provided as required to drain the pan under the bottom coil such that there will be no entrainment of water in the air stream due to improper coil drainage. Drain from bottom pan to disposal point outside the coil casing shall be trapped to insure complete pan drainage. Traps and piping to drainage disposal points shall conform to section entitled "PLUMBING".

17.13 Humidifiers: Humidifiers shall be provided with drain connections and over flow connections where required by the type of humidifier used and shall be connected to disposal point as specified under paragraph Drain Pans and Drain Connections.

18. QUALITY CONTROL: The Quality Control provisions of Division 1, General Requirements, apply to this section. Unless otherwise specified herein, requirements for supervision, inspection, sampling, testing, approval, directing, authorizing, and other requirements of similar import shall be the responsibility of the Contractor Quality Control representative.

Change "High and Low Velocity Duct" to "High and Low Pressure Duct".

18.1 Tests: Upon completion and prior to acceptance of the installation, the contractor shall perform the following tests:

18.1.1 Low Velocity Ductwork: All supply, return, and exhaust ducts, plenums, and casings, shall be tested and made substantially airtight at static pressure indicated for the system before covering with insulation or concealing in masonry. Substantially airtight shall be construed to mean that

no air leakage is noticeable through the senses of feeling or hearing at all duct joints.

18.1.2 High Velocity Ductwork: Duct riser or branch duct including all flexible metal hose runouts to the joint where the duct riser ties into the duct main, shall be tested. Equipment necessary for performing this test include: Rotary hand blower, orifice section, and U-tube gage board complete with cocks and rubbertubing, all of which shall be provided by the Contractor. The test procedure shall be in accordance with SMACNA High Velocity System Duct Construction Manual.

18.1.2.1 Duct Mains: After the vertical duct risers or branch ducts have all been tested and tied into the mains, and after the central station air handling apparatus has been installed, the main shall be tested by use of the same test equipment. This test shall be performed before the mains are insulated. The test procedure shall be as follows:

a. Check all runout connection to make sure they are closed. If air outlets have already been installed, close the static pressure dampers.

b. Place air-supply fan in operation: With the fan in operation, pressure in the mains should build up to approximately 8 to 10 inches of water.

c. Make a thorough visual inspection of all joints. Leaks can be detected by sound or touch.

d. The mains may be released for insulation when it has been determined that all joints are tight.

18.1.2.2 Total leakage of each High Velocity Air Handling System as measured with calibrated orifice shall not exceed 1.5 percent of design capacity.

18.1.3 Preliminary Tests: The air supply and distribution system and its components shall be given an operational test for a period of not less than 4 hours.

18.1.3.1 After preliminary test the air supply and distribution system shall be tested, adjusted, and balanced in accordance with the section entitled, Testing and Balancing Air and Water Distribution Systems.

18.1.4 Conducting Field Tests and Inspections: The Contractor shall perform all field inspections, field tests, and trial operations specified in this section. The contractor shall provide all labor, equipment and incidentals required for testing, except that the Government will provide steam or water required for the tests, when available. The Contracting

Officer will witness all field tests and trial operations specified in this section. The contractor shall give the Contracting Officer ample notice of the dates and times scheduled for tests and trial operations which require the presence of the Contracting Officer.

---END---

SECTION 15907 TESTING AND BALANCING AIR AND WATER SYSTEMS

1. APPLICABLE PUBLICATIONS: The following publications of the issues listed below, but referred to thereafter by basic designation only, form a part of this specification to the extent indicated by the references thereto:

1.1 Associated Air Balance Council (AABC) Publication:

National Standards for Field Measurements and Instrumentation - Total System Balance, Volume Two, No. 12173.

1.2 American Society of Heating, Refrigerating and Airconditioning Engineers (ASHRAE) Publications:

ASHVE Research Report No. 1162, Air Flow Measurements at Intake and Discharge Oenings and Grilles, ASHVE Transactions, Volume 46.

ASHRAE Handbook of Fundamentals, 1977

1.3 American National Standards Institute (ANSI) Publications:

S1.4-71 General-Purpose Sound Level Meters, Specification for.
S1.11-66 Octave, Half-Ocatve and Third-Ocatve Band Filer Sets, Specifications for.

1.4 National Environmental Balancing Bureau (NEBB) Publication:

Procedural Standards for Testing-Balancing-Adjusting of Environemntal Systems.

2. QUALITY CONTROL: The Quality Control provisions of Division 1, General Requirements, apply to this section. Approvals, except those required for field installations, field applications and field tests, shall be obtained before testing and balancing is started.

3. GENERAL REQUIREMENTS:

3.1 Extent of Work: The work required herein shall consist of the measurement and setting of air and water flow facilities provided or specified for the systems, recording data, making tests, and preparing reports, all as hereinafter specified. The work covered under this section of the specification shall be performed on, and after the completion of, work or systems specified in section entitled "Air Supply System", "Central Refrigeration Equipment", and "Hot Water Heating and Chilled Water Cooling System" sections. Deviations from this provisions shall be subject to individual approval of the Contracting Officer.

3.2 Qualifications: The Contractor, as part of this contract, shall obtain the services of a qualified testing organization to perform the testing and balancing work as herein specified. Prior to commencement work under this section of the specifications, the testing organization shall have been approved by the Contracting Officer. The criteria for determining qualifications shall be certification by the Associated Air Balance Council (AABC), certification by the National Environmental Balancing Bureau (NEBB), or organization shall have submitted proof to satisfy the Contracting Officer that the organization shall have submitted proof to satisfy the Contracting Officer that the organization meets the technical standards for membership of the AABC as published in the AABC "National Standards for Field Measurements and Instrumentation - Total System Balance", Volume Two, No. 12173, except that affiliation with manufacturers, installing contractors, or engineering firms may not preclude their acceptance.

3.3 Procedures: Work shall be accomplished in accordance with the Agenda required herein. Procedures described herein shall be followed and, in general, if not specifically described herein, shall be in accordance with the Associated Air Balance Council's "National Standards for Field Measurements and Instrumentation - Total System Balance", Volume Two, No. 12173, and standards of NEBB. Contractor shall also perform applicable work as specified in section entitled "Air Supply System", "Central Refrigeration Equipment", and "Hot Water Heating and Chilled Water Cooling Systems" sections of these specifications.

3.4 Submittal: The Contractor shall submit the name of the organization he proposes to employ to the Contracting Officer for approval within 90 days after contract award. The submittal shall further include the certified individual qualifications of all persons responsible for supervising and performing the actual work, the name of the certifying engineer, and the qualifications of the independent Registered Professional Engineer certifying the report.

3.5 Penalty: If the Contractor fails to submit the name of an acceptable agency within the specified time, the Contracting Officer may select a firm to accomplish the work, and this selection shall be binding upon the Contractor at no additional cost to the Government.

3.6 Retainages: In addition to any other sums retained or withheld pursuant to the provisions of this contract, the amount of $120,000 will be withheld by the Government from payments to the Contractor until such time as the work has been completed and accepted by the Contracting Officer. In no event will this amount be paid to the Contractor prior to 120 days following acceptance of the project; during such time, the Contractor shall investigate and correct any report deficiencies unless such deficiencies are a result of unauthorized tampering by building occupants.

4. AGENDA:

4.1 Preliminary Report: Review plans and specifications prior to installation of any of the affected systems, and submit a written report to the Contracting Officer indicating any deficiencies in the system that would preclude the proper adjusting, balancing, and testing of the systems.

4.2 Submittal: An agenda shall be submitted and approved by the Contracting Officer prior to start of testing and balancing work. The agenda shall be described independently.

a. General description of each air and water system with its associated equipment, and operation cycles for heating, intermediate, and cooling. Where different cycles are used for day and night, they shall be described independently.

b. A complete listing of all air and water flow and air terminal measurements to be performed.

c. Proposed selection points for sound measurements. List shall include typical spaces and sound sensitive areas including specifically conference rooms, clinics, operating rooms and patient room.

d. Specific test procedures and parameters for determining specified quantities, e.g., flow, drafts, sound levels, etc., from the actual field measurements to established compliance with contract requirements.

e. Samples of forms showing applications of procedures and calculations to typical systems.

4.3 Procedure Reporting:

4.3.1 Specific test procedures for measuring air quantities at terminals shall specify type of instrument to be used, method of instrument application (by sketch), and factors for:

(a) Air terminal configuration

(b) Flow direction (supply or exhaust)

(c) Velocity corrections

(d) Effective area applicable to each size and type of air terminal

(e) Density corrections (unless applicable date are covered elsewhere)

4.3.2 Area and application factors and test procedures utilizing velocity meters shall conform to finding in ASHVE Research Report No. 1162,

"Air Flow Measurrements at Intake and Discharge Openings and Grilles", ASHVE Transactions, Volume 46.

5. PROCEDURES AND INSTRUMENTS, GENERAL:

5.1 Requirements: All systems and components thereof shall be adjusted to perform as required by drawings and specifications.

5.2 Test Duration: Operating tests of heating and cooling coils, fans and other equipment shall be of not less than four hours duration after stabilized operating conditions have been established. Capacities shall be based on temperatures and air and water quantities measured during such tests.

5.3 Instrumentation: Method of application of instrumentation shall be in accordance with the approved agenda.

5.3.1 All instruments used for measurements shall be accurate, and calibration histories for each instrument shall be available for examination. Each test instrument shall be calibrated by an approved laboratory or by the manufacturer. The Government Representative has the right to request instrument recalibration, or the use of other instruments and test methodology, where accuracy of readings is questionable.

5.3.2 All instruments shall be applied in accordance with manufacturers' certified instructions.

5.3.3 All labor, instruments and appliances required shall be furnished by the Contractor. Permanently installed instruments used for the tests, e.g., gages, thermometers, etc., shall not be installed until just prior to the tests to avoid damage and changes in calibration.

5.3.4 Accuracy of all thermometers shall be plus or minus 1 graduation at tthe temperatures to be measured. Graduations shall conform to the following schedule.

Medium	Design Temperature Differential (^{o}F)	Maximum Graduation (^{o}F)
Air	10 or less	1/2
Air	over 10	1
Water	10 or less	1/10
Water	10-20	1/2
Water	over 20	1

6. AIR SYSTEM PROCEDURES:

6.1 Adjustments: Adjust all air handling systems to provide the required design air quantity to, or through, each component. Adjusting and balancing of all systems shall be conducted during periods of the year approximating maximum seasonal operation. Laboratory doors shall be closed and fume hood sashes full open, and all other systems in simultaneous operation.

6.2 Equalizers: Equalizing devices shall be adjusted to provide uniform velocity across the inlets (duct side for supply) of terminals prior to measuring flow rates.

6.3 Balance: Flow adjusting (volume control) devices shall be used to balance air quantities only, i.e., proportion flow between various terminals comprising system, and only to the extent that their adjustments do not create objectionable air motion or sound, i.e., in excess of specified limits.

6.3.1 Balancing between runs (submains, branch mains and branches) generally shall be accomplished by flow regulating devices at, or in, the divided - flow fitting.

6.3.2 Restriction imposed by flow regulating devices in or at terminals shall be minimal. Final measurements of air quantity shall be made after the air terminal has been adjusted to provide the optimum air patterns of diffusion.

6.4 Fan Adjustment: Total air system quantities, generally, shall be varied by adjustment of fan speeds, or axial-flow fan wheel blade pitch. Damper restriction of a system's total flow may be used only for systems with direct-connected fans (without adjustable pitch blades), provided system pressure is less than 1/2-inch w.g. and sound level criteria is met.

6.5 Air Measurement:

6.5.1 Except as specifically indicated herein, pitot tube traverses shall be made of each duct to measure air flow therein. Pitot tubes, associated instruments, traverses, and techniques shall conform to the ASHRAE Handbook of Fundamentals.

6.5.2 Except for ducts serving modular office areas with movable partitions, which are subject to change, Pitot tubes traverse may be omitted provided the duct serves only a single room or space and its design volume is less than 2000 cfm. In lieu of Pitot tube traverse, air flow in the duct shall be determined by totalling volume of individual terminals served, measured as described herein.

6.5.3 Where duct's design velocity and air quantity are both less than 1000 (fpm/cfm), air quantity may be determined by measurements at terminals served.

6.6 Test Holes: Test holes, specified in section entitled "Air Supply System" shall be in straight duct, as far as possible downstream from elbows, bends, take-offs, and other turbulence generating devices, to optimize reliability of flow measurements.

6.7 Air Terminal Balancing: Generally, measurement of flow rates by means of velocity meters applied to individual terminals, with or without cones or other adapters, shall be used only for balancing. Measurement of air quantities at each type of air terminal (inlet and outlet) shall be determined by the method approved for the balancing agenda. Laboratory tests shall be conducted to prove accuracy of methodology when so directed by the Government Representative. Such tests shall be conducted in conformance with applicble ASHRAE or ASME codes, and shall be made at no cost to the Government.

6.8 Air Motion: Air motion and distribution shall be as specified and indicated on drawings. The Contractor at no additional cost to the Government shall, in addition to air motion measurements, make smoke tests wherever requested by the Government Representative, to demonstrate the air distribution from air terminals.

7. WATER SYSTEM PROCEDURES:

7.1 Adjustment: All heating, cooling, and condensing water systems shall be adjusted to provide required quantity to, or through each component.

7.2 Metering: Water quantities and pressures shall be measured with calibrated meters.

7.2.1 Venturi tubes, orifices, or other metering fittings and pressure gages shall be used to measure water flow rates and balance systems.

7.2.1.1 System shall be adjusted to provide the approved pressure drops through the heat transfer equipment coils (except room units), converters, etc. prior to the capacity testing.

7.2.2 Where flow metering fittings are not installed, flow balance shall be determined by measuring temperature differential across the heat transfer equipment.

7.2.2.1 Measurement of temperature differential shall be performed with the air system, adjusted as described hererin, in operation.

7.3 Automatic Controls: Automatic control valves shall be positioned for full flow through the heat transfer equipment of the system during tests.

7.4 Distribution: Adjustment of distribution shall be effected by means of balance devices (cocks, valves, and fittings) and automatic flow control valves as provided; service valves shall not be used.

7.4.1 Where automatic flow control valves are utilized in lieu of venturi tubes, only pressure differential need be recorded, provided said pressure is at least the minimum applicable to the tag rating.

7.5 Special Procedures: Where available pump capacity (as designed) is less than total flow requirements of individual heat transfer units of system served, full flow may be simulated by the temporary restriction of flow to portions of the system; specific procedures shall be delineated in the agenda.

8. SOUND TEST PROCEDURES:

8.1 Scope: Tests to demonstrate compliance with sound requirements shall be made at each selection point for sound measurements. Selected point shall include typical spaces and sound sensitive areas including specifically conference rooms, clinic, operating or delivery rooms and patient rooms.

8.2 Timing: Sound level measurements shall be taken at times when the building is unoccupied, or when activity in surrounding areas and background noise levels in areas tested are at minimum and relatively free from sudden changes in noise levels.

8.2.1 Measurements shall be taken with all equipment secured, except that being tested.

8.2.2 The required sound levels shall be measured at any point within a room not less than 6 feet from an air terminal or room unit, and not closer than 3 feet from any floor, wall, or ceiling surface.

8.3 Meters: Sound levels shall be measured with a sound meter complying with the latest ANSI Standard for Sound Level Meters, No. S1.4, Type I published by the American National Standards Institute. The "A" scale shall be used to measure over-all sound levels. To determine the specified octave band levels, the above sound level meter, set on "C" scale, shall be supplemented by an Octave Band Analyzer complying with the latest ANSI Specifications for an Octave-Band Filter Set, No. S1.11.

8.4 Equipment Components: "Equipment components" of room sound (noise) levels shall be determined for each (of eight) octave bands as follows:

a. Measure room sound pressure level "LP_b" with equipment to be tested shut off.

b. Measure room sound pressure level "LP_t" with equipment to be tested turned on.

c. Calculate LP_t-LP_b; if this value is less than 1, applicable test must be rerun with lower background level (LP_b) unless LP_t is within sound pressure level specified for equipment.

d. Determing "C" from table below:

LP_t-LP_b (db)	1	2	3	4-4-1/2	5-5-1/2	6-7-1/2	8-12	over 12
C (db)	7	4	3	2	1-1/2	1	1/2	0

e. The "equipment component" of room sound level equals LP_t-C.

9. CERTIFIED REPORTS:

9.1 Submittal: Three copies of the reports described herein, covering air and water system performance, air motion (fpm), and sound pressure levels, shall be submitted to the Contracting Officer prior to final tests and inspection.

9.2 Instrument Records: Types, serial numbers, and dates of calibration of all instruments shall be included.

9.3 Reports: Report shall identify conspicuously items not conforming to contract requirements, or obvious maloperation and design deficiencies.

9.4 Certification: The reports shall be certified by an independent Registered Professional Engineer who is versed in the field of air and water balancing and who is not affiliated with any firm involved in the design or construction phases of the projects. Certification shall include checking or adherence to agenda, of calculations, of procedures, and evaluation of final summaries.

10. AIR SYSTEM DATA:

10.1 Report: The certified report shall include for each air-handling system the data listed below:

a. Equipment (fan or factory fabricated station unit):

(1) Installation Data

(a) Manufacturer and Model

(b) Size

(c) Arrangement, Discharge, and Class

(d) Motor H.P., Voltage, Phase, Cycles, and Full Load Amps.

(e) Location and Local Identification Data

(2) Design Data: Data listed in schedules on drawings and specifications.

(3) Fan Recorded (Test) Data

(a) C.F.M.

(b) Static Pressure (record only where total system delivery cannot be checked by measuring velocity in main circuit)

(c) R.P.M.

(d) Motor Operating Amps.

(e) Motor Operating B. H. P.

b. Duct Sytems:

(1) Duct Air Quantities (Maximum and Minimum) - Main, Submaines, Branches, Outdoor (Outside) Air, Total-Air, and Exhaust

(a) Duct size(s)

(b) Number of Pitot tube (Pressure) Measurements

(c) Sum of Velocity Measurements (Note: Do not add pressure measurements)

(d) Average Velocity

(e) Recorded (Test) C.F.M.

(f) Design C.F.M.

(2) Individual Air Terminals

(a) Terminal Identification (Supply or Exhaust, Location and Number designation)

(b) Type Size, Manufacturer and Catalog Identification

(c) Applicable Factor for Application, Velocity, Area, etc., and Designated Area

(d) Design and Recorded Velocities - F.P.M. (State "core", "inlet", etc., as applicable)

(e) Design and Recorded Quantities - C.F.M.

(f) Deflector Vane or Diffusion Cone Settings

11. WATER SYSTEM DATA:

11.1 Report: The certified report for each water system shall include the data listed below:

a. Pumps:

(1) Installation Data

(a) Manufacturer and Model

(b) Size

(c) Type Drive

(d) Motor H.P., Voltage, Phase, and Full Load Amps.

(2) Design Data

(a) G.P.M.

(b) Head

(c) R.P.M.

(d) B.H.P. and Amps.

(3) Recorded Data

(a) Discharge Pressures (Full-Flow and No-Flow)

(b) Suction Pressures (Full-Flow and No-Flow)

(c) Operating Head

(d) Operating G.P.M. (From pump curves if metering is not provided).

(e) No-Load Amps. (where possible)

(f) Full-Flow Amps.

(g) No-Flow Amps.

b. Converters and Heat Exchangers:

(1) Installation Data

(a) Manufacture, Model and Type

(b) G.P.M.

(c) Inlet (entering) and Outlet (leaving) Temperatures

(d) Water pressure drop

(2) Recorded Data:

(a) G.P.M. (if metered)

(b) Entering and Leaving Water Temperatures - System

(c) Water Pressure drop

(d) Heating (or Cooling) Media - Conditions

Steam pressure and Temperature and Condensate Temperature, or

Entering and Leaving Water Temperature

(e) Heating (or Cooling) Media - Flow (G.P.M. or lbs per hour)

c. Air Heating and Cooling Equipment

(1) Design Data

(a) Load in BTU or MBh

(b) G.P.M.

(c) Entering and Leaving Water Temperature

(d) Entering and Leaving Air Conditions (D.B. and W.B.)

(e) C.F.M.

(f) Water Pressure Drop

(2) Recorded Data:

(a) Type of Equipment and Identification (location or number designation)

(b) Entering and Leaving Air Conditions (D.B. and W.B.)

(c) Entering and Leaving Water Temperatures

(d) G.P.M. (if metered)

(e) Temperature Rise or Drop

d. Water Chilling Units:

(1) Installation Data:

(a) Manufacturer and Model

(b) Motor H.P., Voltage, Cycles, Phase, and Full Load Amps.

(c) Part Load Amperes

(d) G.P.M. - Chiller and Condenser

(e) Water Pressure Drop - Chiller and Condenser

(f) Entering and Leaving Water Temperature - Chiller and Condenser

(2) Recorded Data (Chiller and Condenser)

(a) G.P.M.

(b) Water Pressure Drop

(c) Entering and Leaving Water Temperature

(d) Amperes

12. SOUND LEVEL DATA:

12.1 Report: The certified report shall record data on sound levels, taken at each selected location, as follows:

a. Source of sound and location.

b. Diagram or description of relationship of sound source to measuring instrument.

c. "A" scale readings:

(1) Equipment being tested turned off (ambient)

(2) Equipment being tested turned on (operating condition)

d. Reading at each specified octave band frequency:

(1) Equipment being tested turned off (ambient)

(2) Equipment being testd turned on (operating condition)

e. "Equipment components" of sound (noise) levels with applicable calculations per "Sound Test Procedure".

f. Graph showing relationship between pressure levels specified and recorded readings.

12.2 Retest: Subsequent to any correctional construction work, such as acoustic corrections, measurements shall be made to verify that associated air and water quantities, as previously measured, have not been disrupted.

12.3 Certified report shall record all sound data, and their locations, after final adjustments of air and water systems involved.

13. FINAL TESTS, INSPECTION AND ACCEPTANCE:

13.1 Scope: Tests shall be made to demonstrate that capacities and general performance of air systems comply with contract requirements.

13.1.1 At the time of final inspection, the Contractor shall recheck, in the presence of the Government Representative, random selections of data (water and air quantities, air motion and sound levels) recorded in the Certified Report. All laboratories shall be rechecked for satisfactory air flow and motion in vicinity of, and through hoods.

13.1.2 Points and areas for recheck shall be selected by the Government Representative.

13.1.3 Measurement and test procedures shall be the same as approved for work forming basis of Certified Report.

13.2 Retests: If random tests elicit a measured flow deviation of ten percent or more from, or a sound level of 2 Db or more greater than, that recorded in the Certified Report listings, at ten percent or more of the rechecked selections, the report shall be automatically rejected. In the event the report is rejected, all systems shall be readjusted and tested, new data recorded, new Certified Reports submitted, and new inspection tests made, all at no additional cost to the Government. Retainage time referred to in subparagraph 3.5 of this section of the specification shall be based on the datte of the final acceptance of the Certified Report.

13.3 Marking of Settings: Following final acceptance of Certified Reports by the Government, the settings of all splitters, dampers, and other adjustment devices shall be permanently marked by the Contractor, so that adjustment can be restored if disturbed at any time. Devices shall not be marked until after final acceptance.

---END---

SECTION 15911. TEMPERATURE AND HUMIDITY CONTROLS

1. APPLICABLE PUBLICATIONS: The following publications of the issues listed below, form a part of this specification to the extent indicated by references thereto.

1.1 Federal Specifications:

QQ-S-571-E	Solder, Tin alloy, Lead-Tin Alloy and lead alloy.
WW-T-799E	Tube, Copper, Seamless (For use with solder type or Flared-tube fittings)

1.2 Military Specifications:

MIL-S-16293F	Strainers, Sediment Pipeline, Water, Air, Gas, Oil or Steam.

1.3 American National Standard Institute (ANSI)

ANSI B19.

2. GENERAL:

2.1 The work consists of providing a complete controls system for all air handling systems, refrigeration machines, cooling tower and other equipment to make complete operable systems.

2.2 The controls systems shall be installed under the supervision of a control manufacturer's representative or a factory trained and certified supervisor. Workmen used for the control system installation shall be experienced in, and normally employed in, this work.

2.3 Requirements stated in section entitled "Energy Monitoring and Control Systems" also apply to this section.

2.4 Temperature Controls:

2.4.1 Temperature controls shall be electric, or electronic, solid-state electronic, or pneumatic type, or a combination thereof that will provide the required sequence of operation control and sensor accuracy. A schematic diagram of the automatic temperature control system shall be submitted by the controls manufacturer to Contracting Officer (CO) showing relays, control valves, control dampers, malfunction alarm, reducing stations, switches, air piping, wiring, or other items not specified herein or shown on the control air flow diagrams indicated on the drawings. The diagram shall be submitted within 180 days of receipt of notice to proceed and before starting installation.

2.4.2 Dampers: Dampers required in the control functions of the automatic temperature control system shall be factory fabricated. All dampers shall be sized to the application by the temperature control manufacturer, sizing methods similar to control valve sizing. Where shown on the drawings control dampers in the air handling units shall be installed by the air handling unit manufacturer and control dampers in the ductwork shall be installed by the Contractor under the supervision of the automatic temperature control manufacturer or his authorized agent. See section entitled "Air Supply Systems" for installation.

2.4.2.1 Dampers shall be balanced type, with flat or elliptical blades, mounted horizontally in welded frame. Blades shall have interlocking edges. Blades and frame shall be not less than 16 U.S. gage sheet steel. Rectangular dampers 12 inches or more in a direction perpendicular to axis shall be multilouver. Blades or louvers shall not be over 8 inches wide. Damper blades shall have steel trunions mounted in bronze sleeve or ball bearings. Dampers shall be not more than 48 inches in length between bearings. Rectangular dampers larger than four square feet in area shall have corner bracing. Dampers shall have position indicator on operating lever system or end of shaft.

2.4.2.2 Dampers shall close tight and shall have felt, rubber or neoprene edges. Maximum allowable leakage shall be 40 cfm per square foot at 3 inches W.G. static pressure. Contractor shall furnish leakage factor curves for verification of maximum leakage.

2.4.2.3 Damper motors and support plates shall not be mounted directly on insulated surfaces, but shall be mounted outside insulation in such a manner as to prevent condensation and positioned to permit maintenance without dismantling. Damper motors shall not be mounted inside ducts or in sub-freezing locations.

2.4.2.4 Steel components installed in galvanized steel ducts shall be hot dip galvanized after fabrication or baked enamel finished.

2.4.3 Valves: Valves shall be sized by the control manufacturer to produce the required capacity at a pressure loss not exceeding the allowable pressure drop indicated on the drawing. Nominal body rating shall be not less than 125 p.s.i. However, the valve body and packing selected shall be designed to withstand the system static head plus the maximum pump head and the maximum temperature of the control medium, chilled water, steam, and/or hot water. Single-seated valves shall have close-off ratings equal to or in excess of the system pressures encountered, that is the maximum upstream pressure. Double-seated valves will be permitted where tight shutoff is not required, but the leakage shall be limited to maximum 5 percent while in the closed position. Three-way modulating valves shall have close-off rating equal to or in excess of the maximum pressure difference, at any load condition, between the outlet and either of the two inlets for mixing valves or the pressure difference between the inlet and either of the two outlets for diverting valves. Each valve shall be equipped with proper packing to assure

there will be no leakage at the valve stem. For steam service, stainless steel trim and removable seats shall be provided on all valves where the pressure differential across the valves is greater than 25 p.s.i.

2.4.4 Large Control Valves: Control valves provided for converters, cooling coils, reheat coils, preheat coils, heating coils, and miscellaneous control valves shall be two-way or three-way pattern of the modulating or two-position type as required for the sequence hereinafter specified. Valve bodies shall be rated at 125 p.s.i. or more for steam, hot-water, or chilled-water service as required for the application. Each valve for modulating service shall have a contoured plug with removable disks, and each valve shall be provided with valve-stem travel indicator or means of indicating position of the valve, as specified hereinafter in paragraph Control indicating devices.

2.4.5 Damper or Valve Operator: Damper or valve operator shall be provided for each automatic damper or valve and shall be of sufficient capacity to operate the damper or valve under all conditions, and to quarantee tight close-off of valves, as specified, against system pressure encountered. Each operator shall be full-proportioning or two-position type as required, indicated or specified, and shall be provided with spring-return for normally closed or normally open position for fire, smoke, freeze or moisture protection on power interruption as indicated, all proportioning operators shall be provided with position positioning devices or indicators, as specified in paragraph Control indicating devices. Valve and damper operating speeds shall be selected or adjusted so that the operators will remain in step with the controller without hunting regardless of load variations. Operators acting in sequence with other operators shall have adjustment of the control sequence as required by the operating characteristics of the system. Electric and electronic modulating operators shall be hydraulic, oil-immersed gear-train, or electro magnetic type.

2.4.6 Control Indicating Devices: Each controller, except space thermostats and space humidity controllers, shall be provided with a permanent indicating device at the controller to indicate the exact point at which the controller is operating within the modulating range. For individually mounted controllers, the indicating device may be permanently mounted or may be a portable volt-ohm meter. Volt-ohm meters shall be 20,000 ohms for direct current or 5,000 ohms for alternating current. A volt-ohm meter shall be furnished for each 12 such controllers, but not more than four such portable devices will be required for the project. For central panel mounted controllers, individual permanently mounted devices may be furnished or a single indicating device may be mounted on each panel and provided with suitable switching means to permit connecting the device to any controller on the panel. The panel indicating device may also be arranged to connect to individually mounted controllers in lieu of portable devices, if desired by the Contractor. At each controller for which portable devices are to be used, means shall be provided for attaching and disconnecting the indicating devices without the use of tools, except for removal of covers, and without breaking control lines.

2.4.7 Thermostats: Thermostats provided shall be full proportioning type or two-position type, as indicated, and shall control within plus or minus 1 degree F. of the temperature setting at the thermostat location, unless otherwise specified.

2.4.7.1 Space Thermostat: Space thermostat shall have locking cover, and shall respond to a change of not over 2 degrees F. Space thermostats shall be mounted 60 inches above the floor except in nurseries. Thermostats in nurseries shall be the level of the cribs to maintain the temperature near the level actually occupied by babies.

2.4.7.2 Remote Thermostats: Remote thermostats shall be duct, immerson, and outdoor types. Set point and throttling range adjusting mechanism for duct and immersion types shall be mounted in a metal case outside the duct or pipe. Sensing element shall be secured in the controlled-medium-flow stream to respond to overall temperature within the duct or pipe. The outdoor compensating thermostat sensing element shall be provided with a protective metal shield or weatherproof housing, and shall be securely mounted where indicated or required. The controller mechanism shall be mounted indoors where indicated or required. The reset ratios of the indoor-outdoor compensating thermostat shall be indicated on the drawing.

2.4.7.3 Fan-Safety Cutoff: Where shown on the drawing fan-safety cutoff with manual reset shall be provided and shall be set to stop the fan if the inlet-air temperature exceeds 125 degrees F.

2.4.7.4 Low-Limit Cutoff: Where shown on the drawing low-limit cutoff with manual reset shall be provided and shall be set to stop the fan. The sensing element shall be not less than 20 feet long, and shall be installed to sense all representative temperatures across the entire coil face.

2.4.8 Humidity Controller: Humidity controller shall be space-type and shall control within plus or minus 5 percent of the setting of the controller. Set point adjustment range shall be approximately 20 to 80 percent relative humidity. The Controller shall have locking-type cover and adjustable differential. Controllers mounted in ducts shall be provided with air shield on the upstream side, when required.

2.5 Unit Control Panel: An individual control panel shall be provided for each central station air handling unit. Panel shall be not lighter than 16-gage, 0.0598 inch nominal thickness, black steel with turned edges. Instruments shall be flush mounted or back mounted and shall be completely piped and wired to a properly identified terminal strip. Piping and wiring shall be on the rear of the panel. Each panel shall contain starters, protective devices, gages, and other control devices that are not normally furnished integral with the equipment. In addition to steel, panels of plywood or particleboard 1/2-inch thick, covered with 1/16-inch thick plastic laminate and meeting fire hazard requirements of Duct Liner, (MIL Spec. No. HH-I-545B), with all exposed edges covered by a trim, will be acceptable. All

electric wiring shall consist of insulated conductors installed in raceways. Each piece of equipment on the panel shall be identified by a nameplate. Nameplates may be plastic or metal and attached to a panel or integral with it. Lettering shall be cut into the plate to a depth of not less than 1/64-inch, and shall show a contrasting color produced by filling with enamel or lacquer or by use of a laminated material. Painting of lettering directly on the surface of the plate or panel will not be permitted. In lieu of unit control panels specified above, control instruments may be mounted in one or more cabinets constructed of steel not lighter than 16-gage, 0.0598 inch nominal thickness. For electrical systems, the steel cabinets shall be in accordance with the National Electrical Code. Control instruments, piping, wiring, and terminals shall be within the cabinets, except that switches, pilot lights and pushbuttons may be mounted on the cabinet doors. Doors shall be equipped with latches and locks. Nameplates shall be provided as specified above for the unit panel.

3. Air Compressor and Piping: Air compressor and piping shall conform to section entitled "Plumbing". Air lines inside Mechanical Equipment Room for pneumatic controls shall be hard-drawn-copper tubing except concealed air lines may be soft-drawn-annealed copper tubing. In lieu of copper, the pipe for connections behind control panels may be virgin black polyethylene tubing with a base resin having a molecular weight of not less than 25,000 and a melt index of not more than 0.3 decigrams per minute. Tubing to be located in suspended ceiling spaces shall be contained in factory-made vinyl or polyethylene sheath or shall be run in conduit. The tubing shall be continuously color coded or number coded. The finished tubing shall withstand a 48-hour immersion in Igepal solution in accordance with ASTM D 1693; after aging for 246 hours at 180 degrees F. In lieu of racking tubing side by side, the Contractor may install factory-made tube bundles with tubes laid parallel and enclosed in a nylon or Mylar barrier envelope over which is extruded a virgin vinyl or polyethylene sheath. Tube fittings and other tubing accessories used shall be designed especially for use with the polyethylene tubing.

4. TRANSFORMERS AND WIRING: Transformers shall be provided for electric or electronic controls when required. For temperature control system, each transformer shall be connected to an electric circuit which serves no other equipment. Spare circuits in electric panels shall not be used for controls. Control wiring shall not be connected to lighting circuits. Power circuits are excluded except when controls serve an individual air handling unit, in which case, transformers may be connected to fan-motor leads of the unit controlled.

5. INSTALLATION: All control wiring or tubing shall be provided under this section of the specifications. Before the air-conditioning installation is accepted, the Contractor shall deliver to the Contracting Officer a statement from the manufacturer certifying that the automatic-control equipment has been inspected and found to be properly installed and is functioning satisfactorily. Unless otherwise indicated all operators, controllers, sensors, indicators and like devices when installed on thermally

insulated ducts, equipment casings and pipe lines shall be provided with stand-off mounting brackets, bases, nipples, adapters or extended tubes to provide clearance between the duct surface and the device not less than the thickness of the insulation. These stand-off mounting items shall be integral with the devices or standard accessories of the controls manufacturer unless otherwise approved by the Contracting Officer. Clamp-on devices or instruments where direct contact with pipe surface is required will be exempted from the use of the above mounting items.

---END---

SECTION 16011. GENERAL REQUIREMENTS, ELECTRICAL

1. APPLICABLE PUBLICATIONS: The publications listed below, but referred to thereafter by basic designation only, form a part of this specification to the extent indicated by the references thereto:

1.1 Federal Specifications (Fed. Spec.):

TT-E-489F & Am 1	Enamel, Alkyd, Gloss (for Exterior and Interior Surfaces).
TT-P-28E	Paint, Aluminum, Heat Resisting (1200 Degrees Fahrenheit).
TT-P-645	Primer, Paint, Zinc-Chromate, Alkyd Type).

1.2 American Society for Testing and Materials (ASTM) Publications:

B117-73	Salt Spray (Fog) Testing.

1.3 American National Standard Institute (ANSI) Publications:

Z 35.1-1972	Specifications for Accident Prevention Signs.

2. APPLICATION: This section applies to all sections of Division 16 of this project except as specified otherwise in the individual sections.

3. SUBMITTALS: Shop drawings, manufacturer's data and certificates for equipment, materials, finish, and pertinent details for each system shall be submitted and approved before procurement, fabrication or delivery of such items to the job site. Partial submittals are not acceptable and such submittals will be returned without review. Descriptive data shall be annotated to show the specific model, type and size of each item the Contractor proposes to furnish.

3.1 Shop Drawings: The drawings shall be a minimum of 8.5 by 11 inches in size, except as specified otherwise, and shall include plans, elevations, and sections of equipment and control spaces identifying and indicating proposed location, layout, and arrangement of items of equipment, control panels, accessories, one line diagrams, schematic diagrams, elementary diagrams, wiring diagrams, and any other items that must be shown to assure a coordinated installation. Wiring diagrams shall have their terminals identified and shall indicate the internal wiring for each item of equipment and the interconnection between the items. Drawings also shall indicate adequate clearance for operation, maintenance and replacement of operating equipment devices. If any equipment is disapproved, drawings shall be revised to show acceptable equipment and shall be resubmitted.

3.2 Manufacturer's Data: Information shall be submitted for all material and equipment as specified in the individual sections that the Contractor proposes to furnish for accomplishment of the contract work. Submittals for each manufactured item shall be manufacturer's descriptive literature, diagrams, performance and characteristic curves, and catalog cuts,