"Do not Sent"

CE DESCRIPTION WORKSHEET
225/2

SPECIFICATIONS | STOCK NO. 4520-00-C00-5959

Item Name: Pumping Unit, Condensate, Heating
Receiver overall Length: 38"
Receiver overall Diameter: 16"
Unit Type: Simplex
Discharge Pressure: 85 PSI
Water Capacity OF PUMP: 15 G.P.M
Discharge Pipe Size: 1-1/4"
Electric Motor HP: 3
Electric Motor RPM: 1700/1750 min. - 1800 MAX (Marathon)
Current type: AC
Voltage: 208/230/460
Frequency: 60 HZ
Phase: 3
Receiver Tank Capacity: 30 G
Total Dynamic Head (TDH): 1
E.D.R: 10,000
Rotation: Left Hand.

8-29-01
Per David-canal
Order M67001-1231-0979
AEL BQ
He is going to check w/
Bene Mart to see if they
still want this item.

Consisting of: Receiver with Float Switch, Sight gauge glass with gauge rack, support, expansion elbow, Piping, Pump, Motor, base & Flexible Coupling. Complete Package to be prepiped and mounted on a one Piece steel common base. Receiver to be galvanized inside and out. Metal to be a Minimum of 3/16" gauge galvanized Steel. Receiver is to be Cylindrical with Factory installed enclosed float Switch Assembly.

U/I | U/P | ☐ NEW ITEM ☐ DESCRIPTION CHANGE | ☐ SHOP STORES ☐ SELF SERVICE CENTER
DATE | INITIALS CN

Continued on Next Page

"Do Not Set"

E DESCRIPTION WORKSHEET
225/2

SPECIFICATIONS

STOCK NO. 4520-00-C00-5959

Item Name: Pumping Unit, Condensate, Heating
Receiver overall Length: 38"
Receiver overall Diameter: 16"
Unit Type: Simplex
Discharge Pressure: 85 PSI
Water Capacity OF PUMP: 15 G.P.M
Discharge Pipe Size: 1-1/4"
Electric Motor HP: 3
Electric Motor RPM: 1700/1750 Min. - 1800 MAX (Marathon)
Current type: AC
Voltage: 208/230/460
Frequency: 60 HZ
Phase: 3
Receiver Tank Capacity: 30 Gallons.
Total Dynamic Head (TDH): 196 feet
E.D.R. 10,000
Rotation: Left Hand.
Consisting of: Receiver with Float Switch, Sight gauge glass with gauge rack, support, expansion elbow, Piping, Pump, Motor, base & Flexible Coupling. Complete Package to be prepiped and mounted on a one Piece steel common base. Receiver to be galvanized inside and out. Metal to be a Minimum of 3/16" gauge galvanized Steel. Receiver is to be Cylindrical with Factory installed enclosed float Switch Assembly.

U/I U/P

☐ NEW ITEM
☐ DESCRIPTION CHANGE
☐ SHOP STORES
☐ SELF SERVICE CENTER

DATE

Continued on Next Page

INITIALS CN

Date 1-6-03

Salesman G Morris

QUOTATION WORK SHEET

Quotation No.

Req. or Reference No. 451-7638

CUSTOMER	PERSON QUOTED / DEPARTMENT	TELEPHONE NO.	ADDRESS
USMC	B. Conley / Lorraine		

SHIPPING INSTRUCTIONS	F.O.B.	TERMS	DELIVERY
	S.P.	N/5	6 WKS.

QTY.	DESCRIPTION	LIST	DISC.	COST	SELL	TOTAL
1	Model 211 Aurora Pump				2499.00	
	w 30gal Tank LH Rotation					
	on Steel Base w/accs.					
	INDUSTRIAL SALES CO., INC.					
	Phone: 910-763-5126					
	FAX - 910-763-3207					
					SUB TOTAL	
					TAX	
					TOTAL	

[redacted] DESCRIPTION WORKSHEET
MASCL 225/2

SPECIFICATIONS | STOCK NO. 4520-00-C00-5959

Using Part number, Square D 9037 Nema 1 Float Switch of equivalent, Brass Water level Gauge Assy Complete With Shut off Valve and rod Protector. Model # 211 Simplex Series, Pump Model I4T, Unit to have steel base, Pump to have Cast Iron Case, bronze impeller, Shaft 416SS, Cast iron spacer, 3 inch inlet, Connections threaded, Packing, lubrication grease With Shaft guard. Motor to be Drip proof, 182T Nema rated, Open drip proof Shaft, frame 184T, horizontal, Motor to be bolted to base. CN
Pump to be turbine type.

Model 211 - Simplex
P/N 30I4T-3 PH Cage 04579
SS: + Mfg: Aurora Pump, A Unit of General Signal Corp
Phone # 708-859-7000 800 Airport Road, North Aurora, Ill 60542

Memo: A replacement unit With pipe connections not located the same as the unit being replaced requires repiping the system and relocating the electrical supply to the float ~~system~~ switch increasing the replacement Cost by an estimated average of $224.00 Per each installation. See Attached Memo from Base Maintenance officer dated 13 June 1986. "Do not list item"

U/I EA U/P 975.41 | ☐ NEW ITEM ☒ DESCRIPTION CHANGE | ☒ SHOP STORES ☐ SELF SERVICE CENTER

DATE 3-25-88 | INITIALS CN

Recd. in June 1990. incorrect item.
Marathon Electric Catalog # H123.
model # WVD182TTDR702 6DG #FR182T
Purchase # M67001-90P-1174 RPM 730 instead of 1750.
Doc # M67001-0030-2227.

Per Mr. Overby we only can use Aurora.

June 20, 1990 Mr. Overby and David Muhammed came over to look at the item in the inspector section. It is the correct item. The pump unit has a marathon motor 1700 - 1800 RMP. attached. Jwb.

7/15/93

To: Shop Stores
attn: Alan

Ref: NSN 4520 00 C00 5959 Pump Unit, Condensate

Per: Mr. Muhammed, Base Maintenance
the two pump units in stock are
missing the sight gauge glass with
the gauge cock.
They will except what we have
in stock now. Would like in
the future to receive the correct
complete unit.
Usually in the box attached
comes the float switch, sight gauge
with the gauge cock.
The float switch was already
installed on both units in stock.
Mr. Muhammed also thinks the
price of 1429.00 is to high

Thank you

Josephene Bradley

ORDER FOR SUPPLIES OR SERVICES

(Contractor must submit four copies of invoice.)

Form Approved
OMB No 0704-0187
Expires Aug 31, 1992

1. CONTRACT/PURCH ORDER NO.
M6700193M4030

2. DELIVERY ORDER NO.

3. DATE OF ORDER
93 MAR 11

4. REQUISITION/PURCH REQUEST NO.
SEE SCHEDULE

5. CERTIFIED FOR NATIONAL DEFENSE UNDER DMS REG 1
DO C9E

6. ISSUED BY CODE
CONTRACTING DIVISION
BOX 8368 MCB, FAX# 9194513072
CAMP LEJEUNE NC 28542-8368
CAROL BEAN BRANCH I 919 451-3011

7. ADMINISTERED BY (other than 6) CODE
CONTRACTING DIVISION
BOX 8368 MCB, FAX# 9194513072
CAMP LEJEUNE NC 28542-8368

8. DELIVERY FOB
[X] DEST
[ ] OTHER
(See Schedule if other)

9. CONTRACTOR CODE 00MDT2S
FACILITY CODE
919-275-0791

NAME AND ADDRESS
MECHANICAL EQUIPMENT CO INC
P O BOX 16272
GREENSBORO NC 27406

10. DELIVER TO FOB POINT BY (Date)
93 APR 28

11. MARK IF BUSINESS IS
[X] SMALL
[ ] SMALL DISAD
[ ] WOMEN-OWNED

12. DISCOUNT TERMS
.000 % 00 DAYS NET 30

13. MAIL INVOICES TO
SEE BLOCK 15

14. SHIP TO CODE MMLV65
FREIGHT TRAFFIC BRANCH
MRK FOR: MMLV65 93M4030
BLDG 1011, MCB
CAMP LEJEUNE, NC 28542

15. PAYMENT WILL BE MADE BY CODE MMLV65
DEFENSE ACCOUNTING OFFICE,CLNC
MRK FOR: MMLV65 93M4030
**MAIL INVOICES TO ADDRESS
SHOWN IN BLOCK 7 ABOVE 28542-5000

MARK ALL PACKAGES AND PAPERS WITH CONTRACT OR ORDER NUMBER

16.
[ ] DLVY — This delivery order is issued on another Government agency or in accordance with and subject to terms and conditions of above numbered contract.

[X] PURCH — Reference your 93T4664 furnish the following on terms specified herein
ACCEPTANCE. THE CONTRACTOR HEREBY ACCEPTS THE OFFER REPRESENTED BY THE NUMBERED PURCHASE ORDER AS IT MAY PREVIOUSL HAVE BEEN OR IS NOW MODIFIED, SUBJECT TO ALL OF THE TERMS AND CONDITIONS SET FORTH, AND AGREES TO PERFORM THE SAME

NAME OF CONTRACTOR | SIGNATURE | TYPED NAME AND TITLE | DATE SIGNED

[ ] If this box is marked, supplier must sign acceptance and return the following number of copies:

17. ACCOUNTING AND APPROPRIATION DATA/LOCAL USE

97X4930.NC2A 000 8B002 0 067001 1C 067004 53000

18. ITEM NO.	19. SCHEDULE OF SUPPLIES/SERVICE	20. QUANTITY ORDERED/ ACCEPTED*	21. UNIT	22. UNIT PRICE	23. AMOUNT

****
* THIS CONFIRMS ORDER PLACED WITH DENISE ON 93 MAR 11 *
* DO NOT DUPLICATE SHIPMENT DO NOT DUPLICATE SHIPMENT DO NOT DUPLICATE SHIPMENT DO NOT DUPLICATE SHIPMENT ****
****

SEE ATTACHED SCHEDULE(S)
ITEMS: 1

*If quantity accepted by the Government is same as quantity ordered, indicate by X. If different, enter actual quantity accepted below quantity ordered & encircle

24. UNITED STATES OF AMERICA
BY: E. T. COLE, JR. CONTRACTING/ORDERING OFFICER

25. TOTAL 5716.00

29. DIFFERENCES

26. QUANTITY IN COLUMN 20 HAS BEEN
[ ] INSPECTED [ ] RECEIVED [ ] ACCEPTED AND CONFORMS TO THE CONTRACT EXCEPT AS NOTED

5-6-93
DATE SIGNATURE OF AUTHORIZED GOVERNMENT REP.

27. SHIP. NO.
[ ] PARTIAL
[ ] FINAL

28. D.O.VOUCHER NO.

30. INITIALS

32. PAID BY

33. AMT VERIFIED CORRECT FO

36. I certify this account correct & proper for payment.
DATE SIGNATURE AND TITLE OF CERTIFYING OFFICER

31. PAYMENT
[ ] COMPLETE
[ ] PARTIAL
[ ] FINAL

34. CHECK NUMBER

35. BILL OF LADING NO.

37. REC'D AT Rdwy
38. REC'D BY 302.618430.7
39. DATE REC'D 5.5.93
40. TOTAL CTNRS 2PC
41. S/R ACCOUNT NUMBER
42. S/R VOUCHER NO.

DD Form 1155, MAY 90 Previous editions are obsolete.

REPORT OF PROPERTY RECEIVED

ECHANICAL EQUIPMENT CO INC

M6700193M4030 002

ITEM NO	SUPPLIES/SERVICES	QUANTITY	UNIT	UNIT PRICE	AMOUNT

THIS CONFIRMS ORDER PLACED WITH DENISE ON 93 MAR 11
DO NOT DUPLICATE SHIPMENT DO NOT DUPLICATE SHIPMENT DO NOT DUPLICATE SHIPMENT DO NOT DUPLICATE SHIPMENT

FAR 52.247-34 F.O.B. DESTINATION JAN 1991

IMPORTANT NOTICE: INQUIRIES RELATING TO THIS ORDER SHALL BE ADDRESSED TO THE CONTRACT ADMINISTRATOR. IF YOUR COMPANY NAME BEGINS WITH:
A OR E THRU J CONTACT DOROTHY NEAL
B OR K THRU O CONTACT SSGT KRAAK
C OR P THRU U CONTACT JANICE MAKINSON
D OR V THRU Z CONTACT SGT PAULIN
INVOICES FOR THIS ORDER MUST CITE BUYING BRANCH 1, AND THE APPLICABLE PURCHASE/DELIVERY ORDER NUMBER. INVOICES WILL BE RETURNED IF THE BUYING BRANCH AND ORDER NUMBER ARE NOT CITED ON THE INVOICE. TELEPHONE: (919) 451-3011

01	452000C005959	M6700130610504	4	EA	1429.0000	5716.00

PRI: 07

PUMP UNIT, CONDENSATE, TURBINE, 30 GAL, 15 GPM, TDH 196 FT., LH ROTATION, 1700-1800 RPM MARATHON ELECTRIC MOTOR, 3 HP, 208/230/460-3-60 HZ, WITH RECEIVER AND FLOAT SWITCH, SIGHT GAUGE GLASS WITH GAUGE COCK, SUPPORT, EXPANSION ELBOW, PIPING, PUMP, MOTOR, BASE AND FLEXABLE COUPLING, COMPLETE PACKAGE TO BE PRE-PIPPED AND MOUNTED ON ONE PIECE STEEL COMMON BASE. P/N: 30I4T
MANF: AURORA PUMP

#H123 MARATHON PER CO
MODEL #2VC182TTDR7026DJ
SN# 93-04698-1

QTY REC'D 4
QTY SHORT 0
QTY OVER 0
BY RVO
DATE 5 7 93

QTY: ------ DATE: 3126
UI: EA NSN: 452000C005959 PSPC:
PROPOSED WAREHOUSE LOCATIONS
T651308AA

(END PAGE)

7/15/93
Called Mechanical Equip Co., Greensboro, N.C. 919-275-0795
Purchase Order # 93 M4030

Mr. Dennis Mathis will check with the Manf. and make sure our next buys be correct.

7/21/93.
Mr. Dennis Mathis called back. said the was 4 pallets shipped with 1 box containing the sight glass gauge and gauge cock.

ITEM NO	SUPPLIES/SERVICES	QUANTITY	UNIT	UNIT PRICE	AMOUNT
	FAR 52.247-34 F.O.B. DESTINATION APR 1984				
	IMPORTANT NOTICE: INQUIRIES RELATING TO THIS ORDER SHALL BE ADDRESSED TO THE PURCHASING AGENT WHOSE NAME AND PHONE NUMBER APPEAR IN BLOCK 6 ON PAGE 1. INVOICES FOR THIS ORDER MUST CITE BUYING BRANCH 1, AND THE APPLICABLE PURCHASE/DELIVERY ORDER NUMBER. INVOICES WILL BE RETURNED IF THE BUYING BRANCH AND ORDER NUMBER ARE NOT CITED ON THE INVOICE.				
0001	452000C005959 M6700100302227	6	EA	1135.00	6810.00
	PRI: 14				
	PUMP UNIT, CONDENSATE, TURBINE, 30 GAL, 15 GPM, TDH 196 ft LH ROTATION, 1750 RPM 3 HP, 208/230/460-3-60HZ WITH RECEIVER & FLOAT, SWITH, SIGHT GAGE GLASS, WITH QAGE COCK, SUPPORT, EXPANSION ELBOW, PIPPING, PUMP, MOTOR, BASE & FLEXABLE COUPLING, COMPLETE PACKAGE TO BE PRE-PIPPED AND MOUNTED ON ONE PIECE STEEL COMMON BASE. AURORA P/N 30I4T				

Pump Unit, Condensate, Turbine, 30 Gal, 15 GPM water capacity, TDH 196 ft., LH Rotation, 1700-1800 RPM Marathon ~~Motor~~ Electric motor, 3 HP, 208/230/460-3-60 HZ, with receiver + float switch, sight Gauge glass with gauge cock, support, expansion elbow, piping, pump, motor, Base + Flexable coupling, complete package to be pre-pipped and mounted on a one piece of steel common base.

P/N: 30 I 4T
manf: aurora Pump.
SOS: Mechancal Equipment Co.

ORDER FOR SUPPLIES OR SERVICES

Form Approved
OMB No. 0704-0187
Expires Jul 31, 1989

5. CERTIFIED FO NATIONAL DEFENSE UNDER DMS REG 1
DO

1. CONTRACT/PURCH ORDER NO.
M67000190P1174

2. DELIVERY ORDER NO.

3. DATE OF ORDER
90 FEB 13

4. REQUISITION/PURCH REQUEST NO.
SEE SCHEDULE

6. ISSUED BY code
CONTRACTING DIVISION
BOX 8368 MCB, FAX# 9194513072
CAMP LEJEUNE NC 28542-8368
ISAAC L EVANS BRANCH 1 919 451-3011

7. ADMINISTERED BY code
CONTRACTING DIVISION
BOX 8368 MCB, FAX# 9194513072
CAMP LEJEUNE NC 28542-8368

8. DELIVERY FOB
|X| DEST
|_| OTHER
see schedule if other

9. CONTRACTOR code 00MDT2S
Facility Code
919-275-0791
Name and Address
MECHANICAL EQUIPMENT CO INC
P O BOX 16272
GREENSBORO NC 27408

10 DELIVER TO FOB POINT BY:
90 MAY 01

11. Check if business is
|X| small
|_| small/disadv
|_| woman-owned

12. DISCOUNT TERMS
.000 % 00 DAYS NET 30

13. MAIL INVOICES TO:
SEE BLOCK 15

14. Ship to: code MMLV65
FREIGHT TRAFFIC BRANCH
MRK FOR: MMLV65 90P1174
BLDG 1011, MCB
CAMP LEJEUNE, NC 28542

15. PAYMENT WILL BE MADE BY: code MMLV65
BASE DISBURSING OFFICER
MRK FOR: MMLV65 90P1174
**MAIL INVOICES TO ADDRESS
SHOWN IN BLOCK 7 ABOVE 28542

MARK ALL PACKAGES AND PAPER WITH CONTRACT OR ORDER NUMBER

16.
TY DLVY | | This delivery order is issued on another Government agency or in accordance with and subject to terms and conditions of above numbered contract.
PE PURCH | X | Reference your 90T3425 furnish the following on terms specified herein.
ACCEPTANCE. THE CONTRACTOR HEREBY ACCEPTS THE OFFER REPRESENTED BY THE NUMBERED PURCHASE ORDER AS IT MAY PREVIOUSLY HAVE BEEN OR IS NOW MODIFIED, SUBJECT TO ALL OF THE TERMS AND CONDITIONS SET FORTH, AND AGREES TO PERFORM THE SAME

NAME OF CONTRACTOR | SIGNATURE | TYPED NAME AND TITLE | DATE SIGNED

|_| if this box is marked, supplier must sign acceptance and return the following number of copies:

17. ACCOUNTING AND APPROPRIATION DATA/LOCAL USE

17X4911.2710 000 8B002 0 067001 1C 067004 53000

18. ITEM NO	19. SCHEDULE OF SUPPLIES/SERVICES	20. QUANTITY ORDERED/ ACCEPTED*	21. UNIT	22. UNIT PRICE	23. AMOUNT

SEE ATTACHED SCHEDULE(S)
ITEMS: 1

*IF QUANTITY ACCEPTED BY THE GOVERNMENT IS SAME AS QUANTITY ORDERED, INDICATE BY X. IF DIFFERENT, ENTER ACTUAL QUANTITY ACCEPTED BELOW QUANTITY ORDERED & ENCIRCLE

24. UNITED STATES OF AMERICA
BY: E. T. COLE, JR. CONTRACTING/ORDERING OFFICER

25. TOTAL 6810.00
29. DIFFERENCES

26. QUANTITY IN COLUMN 20 HAS BEEN:
|_| INSPECTED |_| RECEIVED |_| ACCEPTED AND CONFORMS TO THE CONTRACT EXCEPT AS NOTED
5-31-90
DATE SIGNATURE OF AUTHORIZED GOVERNMENT REP.

27. SHIP NO.
|_| PARTIAL
|_| FINAL

28. D.O. VOUCHER NO.

30. INITIALS

32. PAID BY

33. AMT VERIFIED CORRECT FOR

36. I CERTIFY THIS ACCOUNT CORRECT & PROPER FOR PAYMENT
DATE SIGNATURE AND TITLE OF CERTIFYING OFFICER

31. PAYMENT
|_| COMPLETE
|_| PARTIAL
|_| FINAL

34. CHECK NUMBER

35. BILL OF LADING NO.

REPORT OF PROPERTY RECEIVED

37. REC'D
38. REC'D BY 3024975D3
39. DATE REC'D 5-30-90
40. TOTAL CONT. 6
41. S/R. ACCOUNT NUMBER
42. S/R. VOUCHER NO.

MECHANICAL EQUIPMENT CO INC

ITEM NO	SUPPLIES/SERVICES	QUANTITY	UNIT	UNIT PRICE	AMOUNT
	FAR 52.247-34 F.O.B. DESTINATION APR 1984				
	IMPORTANT NOTICE: INQUIRIES RELATING TO THIS ORDER SHALL BE ADDRESSED TO THE PURCHASING AGENT WHOSE NAME AND PHONE NUMBER APPEAR IN BLOCK 6 ON PAGE 1. INVOICES FOR THIS ORDER MUST CITE BUYING BRANCH 1, AND THE APPLICABLE PURCHASE/DELIVERY ORDER NUMBER. INVOICES WILL BE RETURNED IF THE BUYING BRANCH AND ORDER NUMBER ARE NOT CITED ON THE INVOICE.				
0001	452000C005959 M6700100302227	6	EA	1135.00	6810.00
	PRI: 14				
	PUMP UNIT, CONDENSATE, TURBINE, 30 GAL, 15 GPM, TDH 196 ft LH ROTATION, 1750 RPM 3 HP, 208/230/460-3-60HZ WITH RECEIVER & FLOAT, SWITH, SIGHT GAGE GLASS, WITH QAGE COCK, SUPPORT, EXPANSION ELBOW, PIPPING, PUMP, MOTOR, BASE & FLEXABLE COUPLING, COMPLETE PACKAGE TO BE PRE-PIPPED AND MOUNTED ON ONE PIECE STEEL COMMON BASE. AURORA P/N 30I4T				

Pump Unit, Condensate, Turbine, 30 Gal, 15-GPM water capacity, TDH 196 ft., LH Rotation, 1700-1800 RPM Marathon ~~Motor~~ Electric motor, 3 HP, 208/230/460-3-60 HZ. with receiver + float. Switch, sight Gauge glass with gauge cock, support, expansion elbow, piping, pump, motor, Base + Flexable coupling, complete

(END PAGE)

ORDER FOR SUPPLIES OR SERVICES

Form Approved
OMB No. 0704-0187
Expires Jul 31, 1989

5. CERTIFIED FO NATIONAL DEFENSE UNDER DMS REG 1
DO

1. CONTRACT/PURCH ORDER NO.
M67000190P1174

2. DELIVERY ORDER NO.

3. DATE OF ORDER
90 FEB 13

4. REQUISITION/PURCH REQUEST NO.
SEE SCHEDULE

6. ISSUED BY code
CONTRACTING DIVISION
BOX 8368 MCB, FAX# 9194513072
CAMP LEJEUNE NC 28542-8368
ISAAC L EVANS BRANCH 1 919 451-3011

7. ADMINISTERED BY code
CONTRACTING DIVISION
BOX 8368 MCB, FAX# 9194513072
CAMP LEJEUNE NC 28542-8368

8. DELIVERY FOB
|X| DEST
|_| OTHER
see schedule if other

9. CONTRACTOR code 00MDT2S
Facility Code
919-275-0791
Name and Address
MECHANICAL EQUIPMENT CO INC
P O BOX 16272
GREENSBORO NC 27408

10 DELIVER TO FOB POINT BY:
90 MAY 01

11. Check if business is
|X| small
|_| small/disadv
|_| woman-owned

12. DISCOUNT TERMS
.000 % 00 DAYS NET 30

13. MAIL INVOICES TO:
SEE BLOCK 15

14. Ship to: code MMLV65
FREIGHT TRAFFIC BRANCH
MRK FOR: MMLV65 90P1174
BLDG 1011, MCB
CAMP LEJEUNE, NC 28542

15. PAYMENT WILL BE MADE BY: code MMLV65
BASE DISBURSING OFFICER
MRK FOR: MMLV65 90P1174
**MAIL INVOICES TO ADDRESS
SHOWN IN BLOCK 7 ABOVE 28542

MARK ALL PACKAGES AND PAPER WITH CONTRACT OR ORDER NUMBER

16. TYPE
DLVY |_| This delivery order is issued on another Government agency or in accordance with and subject to terms and conditions of above numbered contract.
PURCH |X| Reference your 90T3425 furnish the following on terms specified herein.

ACCEPTANCE. THE CONTRACTOR HEREBY ACCEPTS THE OFFER REPRESENTED BY THE NUMBERED PURCHASE ORDER AS IT MAY PREVIOUSLY HAVE BEEN OR IS NOW MODIFIED, SUBJECT TO ALL OF THE TERMS AND CONDITIONS SET FORTH, AND AGREES TO PERFORM THE SAME

NAME OF CONTRACTOR | SIGNATURE | TYPED NAME AND TITLE | DATE SIGNED

|_| if this box is marked, supplier must sign acceptance and return the following number of copies:

17. ACCOUNTING AND APPROPRIATION DATA/LOCAL USE

17X4911.2710 000 8B002 0 067001 1C 067004 53000

18. ITEM NO	19. SCHEDULE OF SUPPLIES/SERVICES	20. QUANTITY ORDERED/ ACCEPTED*	21. UNIT	22. UNIT PRICE	23. AMOUNT

SEE ATTACHED SCHEDULE(S)
ITEMS: 1

*IF QUANTITY ACCEPTED BY THE GOVERNMENT IS SAME AS QUANTITY ORDERED, INDICATE BY X. IF DIFFERENT, ENTER ACTUAL QUANTITY ACCEPTED BELOW QUANTITY ORDERED & ENCIRCLE

24. UNITED STATES OF AMERICA
BY: E. T. COLE, JR. CONTRACTING/ORDERING OFFICER

25. TOTAL 6810.00

29. DIFFERENCES

26. QUANTITY IN COLUMN 20 HAS BEEN:
|_| INSPECTED |_| RECEIVED |_| ACCEPTED AND CONFORMS TO THE CONTRACT EXCEPT AS NOTED
5-31-90
DATE SIGNATURE OF AUTHORIZED GOVERNMENT REP.

27. SHIP NO.

28. D.O. VOUCHER NO.

30. INITIALS

|_| PARTIAL
|_| FINAL

32. PAID BY

33. AMT VERIFIED CORRECT FOR

36. I CERTIFY THIS ACCOUNT CORRECT & PROPER FOR PAYMENT
DATE SIGNATURE AND TITLE OF CERTIFYING OFFICER

31. PAYMENT
|_| COMPLETE
|_| PARTIAL
|_| FINAL

34. CHECK NUMBER

35. BILL OF LADING NO.

REPORT OF PROPERTY RECEIVED

37. REC'D

38. REC'D BY
302497503

39. DATE REC'D
5-30-90

40. TOTAL CONT.
6

41. S/R. ACCOUNT NUMBER

42. S/R. VOUCHER NO.

ITEM NO	SUPPLIES/SERVICES	QUANTITY	UNIT	UNIT PRICE	AMOUNT

FAR 52.247-34 F.O.B. DESTINATION APR 1984

IMPORTANT NOTICE: INQUIRIES RELATING TO THIS ORDER SHALL BE ADDRESSED TO THE PURCHASING AGENT WHOSE NAME AND PHONE NUMBER APPEAR IN BLOCK 6 ON PAGE 1. INVOICES FOR THIS ORDER MUST CITE BUYING BRANCH 1, AND THE APPLICABLE PURCHASE/DELIVERY ORDER NUMBER. INVOICES WILL BE RETURNED IF THE BUYING BRANCH AND ORDER NUMBER ARE NOT CITED ON THE INVOICE.

0001	452000C005959	M6700100302227	6	EA	1135.00	6810.00

PRI: 14

PUMP UNIT, CONDENSATE, TURBINE, 30 GAL, 15 GPM, TDH 196# LH ROTATION, 1750 RPM 3 HP, 208/230/460-3-60HZ WITH RECEIVER & FLOAT, SWITH, SIGHT GAGE GLASS, WITH QAGE COCK, SUPPORT, EXPANSION ELBOW, PIPPING, PUMP, MOTOR, BASE & FLEXABLE COUPLING, COMPLETE PACKAGE TO BE PRE-PIPPED AND MOUNTED ON ONE PIECE STEEL COMMON BASE.
AURORA P/N 30I4T

(END PAGE)

ORDER FOR SUPPLIES OR SERVICES

Form Approved
OMB No. 0704-0187
Expires Jul 31, 1989

5. CERTIFIED FO NATIONAL DEFENSE UNDER DMS REG 1
DO

1. CONTRACT/PURCH ORDER NO.
M6700190P1174

2. DELIVERY ORDER NO.

3. DATE OF ORDER
90 FEB 13

4. REQUISITION/PURCH REQUEST NO.
SEE SCHEDULE

6. ISSUED BY code
CONTRACTING DIVISION
BOX 8368 MCB, FAX# 9194513072
CAMP LEJEUNE NC 28542-8368
ISAAC L EVANS BRANCH 1 919 451-3011

7. ADMINISTERED BY code
CONTRACTING DIVISION
BOX 8368 MCB, FAX# 9194513072
CAMP LEJEUNE NC 28542-8368

8. DELIVERY FOB
|X| DEST
|_| OTHER
see schedule if other

9. CONTRACTOR code 00MDT2S
Facility Code
919-275-0791
Name and Address
MECHANICAL EQUIPMENT CO INC
P O BOX 16272
GREENSBORO NC 27408

10 DELIVER TO FOB POINT BY:
90 MAY 01

11. Check if business is
|X| small
|_| small/disadv
|_| woman-owned

12. DISCOUNT TERMS
.000 % 00 DAYS NET 30

13. MAIL INVOICES TO:
SEE BLOCK 15

14. Ship to: code MMLV65
FREIGHT TRAFFIC BRANCH
MRK FOR: MMLV65 90P1174
BLDG 1011, MCB
CAMP LEJEUNE, NC 28542

15. PAYMENT WILL BE MADE BY: code MMLV65
BASE DISBURSING OFFICER
MRK FOR: MMLV65 90P1174
**MAIL INVOICES TO ADDRESS
SHOWN IN BLOCK 7 ABOVE 28542

MARK ALL PACKAGES AND PAPER WITH CONTRACT OR ORDER NUMBER

16.
TY DLVY | | This delivery order is issued on another Government agency or in accordance with and subject to terms and conditions of above numbered contract.
PE PURCH | X | Reference your 90T3425 furnish the following on terms specified herein.
ACCEPTANCE. THE CONTRACTOR HEREBY ACCEPTS THE OFFER REPRESENTED BY THE NUMBERED PURCHASE ORDER AS IT MAY PREVIOUSLY HAVE BEEN OR IS NOW MODIFIED, SUBJECT TO ALL OF THE TERMS AND CONDITIONS SET FORTH, AND AGREES TO PERFORM THE SAME

NAME OF CONTRACTOR | SIGNATURE | TYPED NAME AND TITLE | DATE SIGNED

|_| if this box is marked, supplier must sign acceptance and return the following number of copies:

17. ACCOUNTING AND APPROPRIATION DATA/LOCAL USE
17X4911.2710 000 8B002 0 067001 1C 067004 53000

18. ITEM NO	19. SCHEDULE OF SUPPLIES/SERVICES	20. QUANTITY ORDERED/ ACCEPTED*	21. UNIT	22. UNIT PRICE	23. AMOUNT

SEE ATTACHED SCHEDULE(S)
ITEMS: 1

*IF QUANTITY ACCEPTED BY THE GOVERNMENT IS SAME AS QUANTITY ORDERED, INDICATE BY X. IF DIFFERENT, ENTER ACTUAL QUANTITY ACCEPTED BELOW QUANTITY ORDERED & ENCIRCLE

24. UNITED STATES OF AMERICA
BY: E. T. COLE, JR. CONTRACTING/ORDERING OFFICER

25. TOTAL 6810.00
29. DIFFERENCES

26. QUANTITY IN COLUMN 20 HAS BEEN:
|_| INSPECTED |_| RECEIVED |_| ACCEPTED AND CONFORMS TO THE CONTRACT EXCEPT AS NOTED
5-31-90
DATE SIGNATURE OF AUTHORIZED GOVERNMENT REP.

27. SHIP NO.
|_| PARTIAL
|_| FINAL

28. D.O. VOUCHER NO.

30. INITIALS

32. PAID BY

33. AMT VERIFIED CORRECT FOR

36. I CERTIFY THIS ACCOUNT CORRECT & PROPER FOR PAYMENT
DATE SIGNATURE AND TITLE OF CERTIFYING OFFICER

31. PAYMENT
|_| COMPLETE
|_| PARTIAL
|_| FINAL

34. CHECK NUMBER

35. BILL OF LADING NO.

REPORT OF PROPERTY RECEIVED

37. REC'D | 38. REC'D BY 302497503 | 39. DATE REC'D 5-30-90 | 40. TOTAL CONT. 6 | 41. S/R. ACCOUNT NUMBER | 42. S/R. VOUCHER NO.

MECHANICAL EQUIPMENT COMPANY

MANUFACTURERS REPRESENTATIVES

INDUSTRIAL · COMMERCIAL · MUNICIPAL · OEM

GREENSBORO OFFICE
P.O. Box 16272
2609 Greengare Drive
PHONE: (919) 275-0791
FAX: 1-919-274-3483

TO: Camp Lejeune Purch. & Contracting DATE 6-19-90

ATTENTION: Ike Evans & R. Block PAGE 1 of 1

SUBJECT: P.O. # 90 P1174
(6) Condensate Units - 1800 RPM Rating

FACSIMILE TRANSMISSION

As we discussed by phone, the subject Aurora Condensate Units have motors rated at 1730 RPM with 208/230/460 triple voltage name plate. The rated RPM is the speed at which the motor acheives full load power, in this case, 3HP. The motor is classified as an 1800 RPM motor because that is the nearest "synchronous speed". It satisfies the design standards of the National Electrical Manufacturers' Association (NEMA) which require the motor RPM rating to be within 5% of synchronous speed. The slower the motor operating speed, the lower the power consumption is a good general rule to also remember.

These units are in full compliance with the P.O. requirements and all applicable NEMA standards.

If there are any questions or if all pages are not received, please advise.

Thank you.

Robert E. McCallum Jr.

```
PPPPP    A     CCC    K   K   IIIII   N   N    GGG
P   P   A A   C       K  K      I    NN  N   G          **************
PPPP   AAAAA  C       KKK       I    N N N   G  GGG     *  L I S T  *
P      A   A  C       K K       I    N  NN   G   G      **************
P      A   A   CCC    K  K    IIIII   N   N    GGGG
```

```
                                                                  **************
                                   04/06/90     PAGE 01           * 9A0-04575 *
                                   CHANGE 1     GLK               **************

                                   CUST ORDER NO
SHIP TO: FREIGHT TRAFFIC BRANCH    18-0290-114-11
         BLDG 1011 MCB
         CAMP LEJEUNE NC 28542

                                                   FREIGHT          CERT PTS
MARKS- FOR:  MMLV65 90P1174                        PREPD NOT ALWD     X
```

CUST#	EXEMPT #	DIST STATE	SHIP VIA	REQST- 4/06/90
434960	605 1060 17498	0660 NC	RDWY/CFWY	SCHED-

PROD	QTY	LIST	LN	PART / DESCRIPTION	QTY SHIPPED
				MARKS FOR: MMLV65 90P1174	
1210	6		01	X201081 S/N 90-04575- 1- 6	
				1.25X1.25X4 I4T 211 BF	
				14B LEFT HAND ROTATION	
				15B 30 GAL RECEIVER	
				1A SQ D 9037 HG NEMA 1 F/S	
1188	6		02	922-3291-812	
				3 HP 3-60-230/460 1750 RPM	
				HOR ODP MTR 182T FR	
				NOTE: TRIPLE VOTAGE NAMEPLATE REQUIRED	
				208/230/460	
				UNIT TO BE FACTORY ASSEMBLED	

A0143-1 E0912-1 U0861-1 T0487-1

GPM	TDH	RPM	IMP PATT	MTRFR
16	200 86.5	1750	444	182T

NO MATERIAL SHOULD BE RETURNED WITHOUT PRIOR WRITTEN AUTHORIZATION AND THEN MUST E
RETURNED TO THE ADDRESS BELOW:

ALL INQUIRIES AND CORRESPONDENCE SHOULD BE SENT WITH THIS NUMBER- 9A0-04575
TO THE ADDRESS BELOW:
MANUFACTURING POINT: AURORA PUMP A UNIT OF GENERAL SIGNAL
800 AIRPORT RD. NORTH AURORA IL. 60542

P A C K I N G L I S T

OPNAV 5216/144A (Rev. 8-81)
S/N 0107-LF-052-2320

DEPARTMENT OF THE NAVY

Memorandum

4400
MAIN

DATE: 13 JUN 1986

FROM: Base Maintenance Officer, Marine Corps Base, Camp Lejeune

TO: Purchasing and Contracting Officer, Marine Corps Base, Camp Lejeune

Via: Technical and Research Branch, Marine Corps Base, Camp Lejeune

SUBJ: PURCHASE OF CONDENSATE PUMP UNITS, NSN 4520-00-C00-5959, & NEW ITEMS UNDER CONTROL NO'S SMAD 607 & SMAD 612

Encl: (1) Aurora Pump Bulletin Number 2100

1. As per the telephone conversation on 10 May 1986 between Mr. Windley, Technical and Research, and Donald Oglesby, Base Maintenance, it is requested that the purchase of condensate pump units under NSN 4520-00-C00-5959 be the Aurora Unit, Model Number 211 Simplex as shown in the enclosure or a substitute unit with the inlet and outlet pipe connections on the pump and tank in the exact location as the Aurora model. A replacement unit with pipe connections not located the same as the unit being replaced requires repiping the system and relocating the electrical supply to the float switch increasing the replacement cost by an estimated average of $154.00 for labor and $70.00 for material per installation.

2. It is also requested that the new items attached with this request; Control No. SMAD 607 and Control No. SMAD 612, Aurora Pump & Aurora Condensate Pump Unit be given the same consideration as NSN 4520-00-C00-5959. These are direct replacement items for existing units in use. Any deviation away from the specifications of these items will result in the same increase in replacement cost as stated above.

W. M. RICE
By direction

Applies to LSN:
4520-00-C00-5959
4520-01-C00-8124
4520-01-C00-9139

PURCHASE DESCRIPTION WORKSHEET
MCBCL 4225/2

Type

SPECIFICATIONS Code 555 Manual

STOCK NO. 4520-00-C00-5959

Pumping unit, condensate, heating, horizontal, simplex, unit consists of receiver with float switch, sight gauge glass with gauge cock, support, expansion elbow, piping, pump, motor, base and flexible coupling. complete package to be prepiped and mounted on a one piece common base. Specific information on components as follows:

Receiver to be cylindrical - 16 in dia, 38 in lg, 3/16 in thick steel - galvanized inside and outside, to have brass float and enclosed float switch assy;

Brass water level gauge assy complete w/ shut off valve and protector rods;

Turbine pump, cast iron, bronze impeller, stainless steel shaft, to be bolted to base, 15 GPM capacity, 85 PSI discharge pressure, 10,000 EDR, ~~3 HP~~, interchangeable packing; (3 in inlet per WB HR *)

Electric Motor, 3 HP, drip proof nema rated, open drip-proof steel shaft, 1750 RPM, dual voltage, 200-230/460 V, 60 HZ. motor to be bolted to base. (3 phase) *

Refer Base Maint Memorandum ~~(copy attached)~~ dtd 25 Jan 83 Sent to P&C.

to be Aurora Simplex Model 211 as specified.

Mfg: Aurora Pump, a unit of General Signal Corp, 800 Airport Rd, North Aurora IL 60542

U/I EA U/P 751.00

☐ NEW ITEM
☒ DESCRIPTION CHANGE

☒ SHOP STORES
☐ SELF SERVICE CENTER

DATE 2/18/83

INITIALS VGB

* P&C copy also annotated.

3in inlet
on description
Shut aurora -
on the 10,000 EDR.
OK not to show.
Spencer objected
to showing 3in discharge
before 6in left off
description. VGB TAR
18 Feb 83

E043 053
Desc chge -
To agree with
format on 1gh
pump just calculated
on 4520-01-C00-8624

OPNAV 5216/144A (Rev. 8-81)
S/N 0107-LF-052-2320

4520-00-C00-5959

DEPARTMENT OF THE NAVY

Memorandum

DATE: 86 Oct 21

FROM: Kathie Gill, Purchasing Agent, Contracting Division

TO: James Winley, Item Researcher, Tech and Research

SUBJ: FSC 452000C005959

This office would like to request that the model number be added on to this description. We have had problems in the past with this item and feel that if the model number was added on it would eliminate the possibility of future errors. Our research shows that the model number should read 3014T. If this agrees with your records, please make an addition to your description.

Thank you.

1. Research indicates that when above item was originally catalogued that model 3014T3 was used. Item was catalogued 2 March 1970.

2. A memo from Mr. Dillon, Base Maintenance, dtd 25 Jan 83, stated that Aurora Model 211 Simplex was required. A copy of that statement is attached and it indicated a copy was sent to PWC.

3. In view of the above we do not have the authority to make the requested change.

C Norman
10-22-86

RESEARCHED
Tech & Research BR
CATALOGER # 102

211-BF
type 3014

2774 | 3106

1-4900

To: T&R
ATTN: V. Butler

MAIN/JLS/cmm
4400
25 Jan 1983

From: Base Maintenance Officer
To: Purchasing and Contracting Officer

Subj: Purchase of Condensate Pump Units. NSN 4520-00-C00-5959

Ref: (a) FONECON btwn Mr. Harris, P&C and J. Sellers, BMainDiv on 18 Jan 1983

Encl: (1) Aurora Pump Bulletin Number 210D

1. As discussed during the reference, it is requested that the purchase of condensate pump units under NSN 4520-00-C00-5959 be the Aurora Unit, Model Number 211 Simplex as shown in the enclosure or a substitute unit with the inlet and outlet pipe connections on the pump and tank in the exact location as the Aurora model. A replacement unit with pipe connections not located the same as the unit being replaced requires repiping the system and relocating the electrical supply to the float switch increasing the replacement cost by an estimated average of $122 for labor and $50 for material per installation.

R. M. DILLON
By direction

MCBCL 4400

4520 00 C00 5959

NEW ITEM NOTICE

SECTION I

FROM: SHOP PLANNERS OFFICE BASE MAINTENANCE DEAR DEPARTMENT

TO: SHOP STORES OFFICER, CENTRAL SHOP STORES BRANCH DATE: 19 Feb. 1970

1. FSN/MFR PART NO.	2. REFERENCE PUBLICATION	3. MFR MAKE AND MODEL OR EQUIP ID NO.
4520-C00-5959		Aurora 3014T-3 Mechanical Eq. Co. Box 4066 Charlotte N.C. 28204

4. UNIT PRICE.	5. UNIT OF ISSUE	6. 30 DAY USAGE	7. DATE REQUIRED	8. ISSUE POINT REQUIRED
356.10	EA.	2	March 19, 70	MLV 65

9. DESCRIPTION: Aurora horizontal simplex condensate pump, Model 3014T-3, complete with 30 gal. receiver, float and float switch and guage glass, 3 H.P., 1750 RPM, 220 volt, 3 phase, 60 cycle motor. All mounted and assembled on a structural steel base. Pump capacity 15 GPM at 85 PSI discharge pressure. Include mechanical seals.

See desc chge 30 mar 81

SIGNATURE Leo J. Williams
Leo J. Williams Shop 19

SECTION II

FROM: SHOP STORES OFFICER, CENTRAL SHOP STORES BRANCH DATE:

TO: TECH AND RESEARCH, STOCK CONTROL BRANCH CONTROL NO: 2984

RESEARCH ☐ CATALOG ☐

DOCUMENT NUMBER	120 DAY QUANTITY	MARK FOR

U/I	U/P	MEC	SAC	SMC	MC	RD	O/H	OBLIG	DUE
EA	356.10	35	1						

REMARKS:

Catalogued

RESEARCHED BY
(Fuentes)
DATE MAR 2 1970

OK
MLV 65
LOB

SIGNATURE E. O. Ferguson
OFFICER IN CHARGE, CENTRAL SHOP STORES

TECHNICAL AND RESEARCH BRANCH
Direct Support Stock Control
Assistant Chief of Staff, Logistics
Marine Corps Base
Camp Lejeune, North Carolina 28542

Date 24 Feb 83

M E M O R A N D U M

From: Virginia Butler 5163

To: Mr Lanier - Plmt Utilg
Base maintenance

Subj: Description at P&C on
1ph. condensate unit
4520-A-600 8124

copy encl (1) attached.
Encl (2) copy of rough
draft typed before typing.

also on the copy you
rec'd of the 3 phase.
NSN 4520-00600 5959
Just put in following per
VGB TR 3ph (on nameplate)
3 in inlet on pump description
VGB

Note Copy memo held TR VGB

SPEC.

STOCK NO.

4520-00-C00-5959

DESCRIPTION:

Pumping unit, condensate, heating, horizontal, simplex, unit consists of receiver with float switch, sight gauge glass with gauge cock, support, expansion elbow, piping, pump, motor, base and flexible coupling. Complete packageto be prepiped and mounted on a one piece common base. Specific information on components as follows: Receiver to be cylindrical-16 in. dia, 38 in lg, 3/16 in. thick steel-galvanized inside and outside, to have brass float and enclosed float switch assy; Brass water level gauge assy complete w/shut off valve and protector rods. ; Turbine pump, cast iron,bronze impeller, stainless steel shaft, to be bolted to base,15 gpm capacity, 85 psi discharge pressure, 10,000 EDR, ~~inter-~~ Pump inlet changeable packing; electric motor, 3 hp, drip proof nema rated, open drip-proof steel shaft, 1750 rpm, dual voltage, 200-230/460V, 60HZ, ~~3 phase~~ Motor to be bolted to base. Refer Base Maint Memorandum dtd 25 Jan 83 sent to P&C. to be Aurora Simplex Model 211 as specified. Mfg: Aurora Pump, A Unit of General Signal Corp.,800 Airport Rd. North Aurora, IL 60542 Desc. Change Shop Stores EA 751.00 2-18-83 TGR VG Butler

	SCHEDULE	RD	NRD	DATE	ORDER NO.	VENDOR	QTY.	UNIT PRICE	REJECT CODE
1									
2									
3									
4									
5									
6									

RRNT-22027 A

STOCK NO.

* added on P&C copy notified Mr Lamer, Maint Plmb & Heating

	SCHEDULE	RD	NRD	DATE	ORDER NO.	VENDOR	QTY.	UNIT PRICE	REJECT CODE
7									
8									
9									
10									
11									
12									
13									
14									
15									
16									
17									
18									
19									
20									
21									
22									
23									
24									
25									
26									
27									

KARDEX SYSTEMS, INC. RRNT-22027 B

CD/AFE/ss
4200

Subj: Report on Contracting Discrepancies Identified by Conference at DSSC on 19 Jan 1983

Decision Needed: What policy do you desire for notice of obsolete requirements for stock? What action do you desire in this case. We can reorder with a new document to determine if the old product can be bought from the Carolina Office Supply shelf stock.

d. M67001-82-M-8121 for water pump, condensate, under NSN 4520-00-C00-5959. Mr. Zane HARREL states that the specification is incomplete and the wrong item was purchased on a BPA. An investigation shows that this is not accurate. The description used was the same as requested. No modifications were made by this office. Written quotes were requested and approved by Mr. SMITH of Base Maintenance. The contractors did not challenge the specifications. The Kristal Associates made an acceptable couteroffer with certain modifications that were accepted by Mr. SMITH. Delivery appears to conform with the contract.

Acton: If Mr. SMITH will not accept the pumps, he should inform us of what exchange terms he would like and state what contract changes are desired. It is recommended that all ordering activities be made aware that part numbers specified by contract take legal precedence over other specification terms. Part numbers should only be used when in fact the part number requested is truely desired. Do not make an attempt to modify a part number with extraneous language.

e. M67001-2285-4045 was issued for 2" pipe as opposed to 3/4" pipe as requested due to the buyer misreading the ZBR. The request was mistakenly typed with other orders for 3/4" pipe.

Action: We can reorder with a new document and hold the current delivery as stock; or, pay a restocking fee under this contract. Please advise.

f. Orders in general for rock, gas and tires will be filled prior to the arrival of the paperwork due to the system created for expedited ordering. Please investigate DSSC's desire for expedited ordering on these commodities. If you want to continue the existing practice, then traffic will continuously be delayed in receiving the paperwork. In particular, orders for compressed gases from the Sufolk Gas Company are being delayed due to the DLA priority given to the other bases, i.e., shipyard. DLA desires us to increase the number of cylinders to accomodate the ordering procedure. If you would like to challenge this policy, please give me a written justificaton for an offschedule contract to a local vendor for hot orders. If we hire a second contractor to provide his own tanks, then a logistical problem will be created for your office. In the past, when National Welders were used, rental charges were incurred due to late return of cylinders.

AURORA® PUMPS

BULLETIN 210D

210 SERIES ONE & TWO STAGE CONDENSATE PUMPS

CAPACITIES TO 150 G.P.M.
HEADS TO 270 FEET
TEMPERATURES TO 190°F.

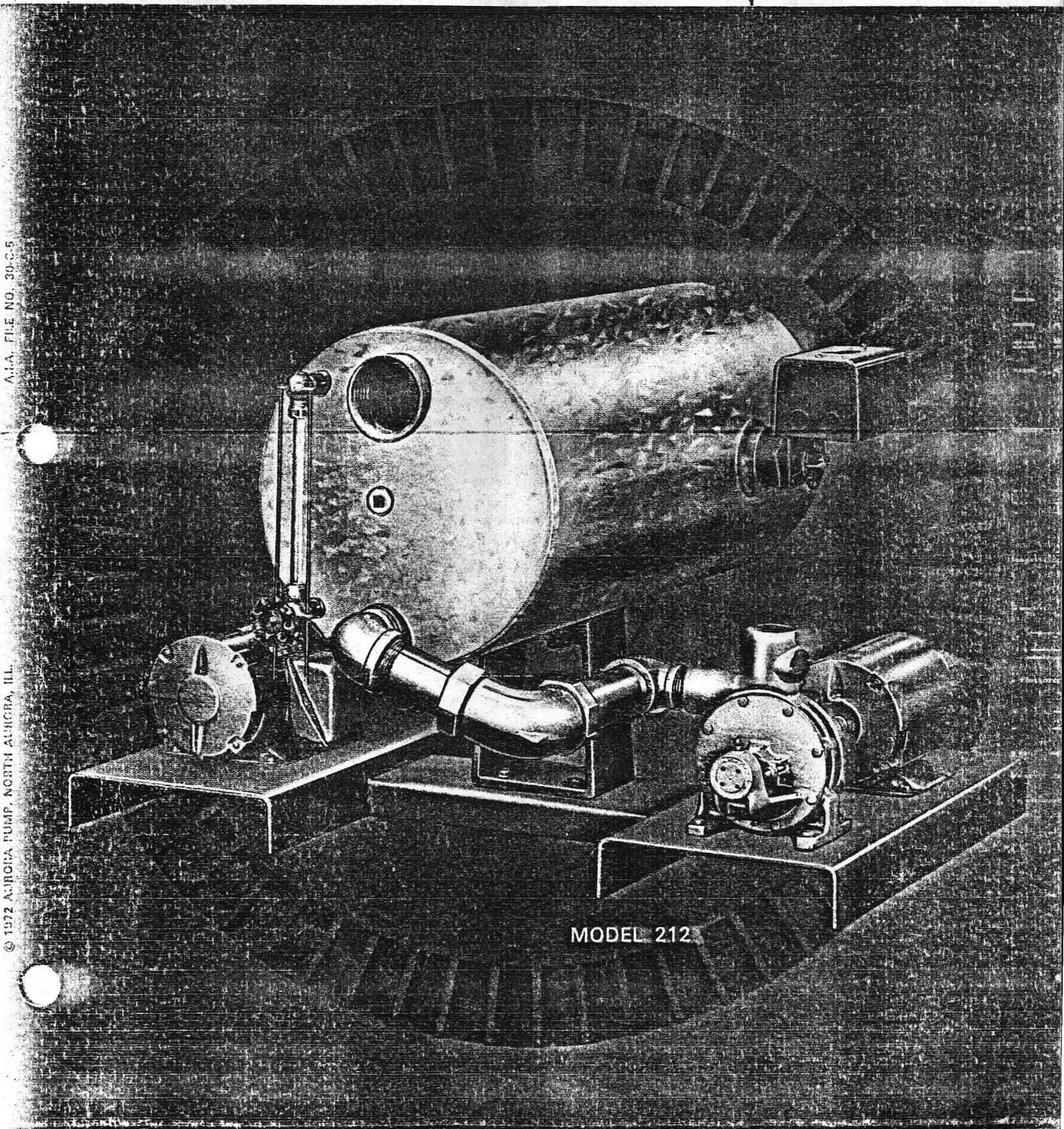

MODEL 212

A.I.A. FILE NO. 30-C-5

INTRODUCTION AURORA CONDENSATE UNITS

Condensate units provide for an automatic return of hot water condensation from radiators, coils, pipe, etc., to high or low pressure boilers. They are also utilized in industrial complexes for returning liquids to overhead storage tanks of gravitational circulating systems as well as many other unique uses. Condensate return requirements call for a system that will provide uninterrupted service for single or multiple boiler installations. Aurora Packaged Systems deliver those values which you need and expect. Quality features include a galvanized receiver, float switch and pumps all completely assembled. In Aurora's design, the pumps, support, and piping are mounted beneath the receiver on a common steel base. As your heating system grows, the receiver design will allow you to convert from simplex to duplex. Just add a pump and pipe it up! In a duplex system, single pump operation provides service when capacity and demand call for normal service. Duplex units require very little additional floor space than a simplex unit requires. The two APCO pumps used in the system operate alternately to extend the life of both pumps. Both pumps operate simultaneously when service demands exceed the capabilities of a single pump. This Aurora product offers:

- Turbine design that handles vapor bubbles with no vapor lock.
- Design simplicity with a minimum of parts.
- Complete system package prepiped on a one-piece common base.
- Versatile, rugged, compact construction.
- Simplex and Space Saving Duplex Systems.

The following pages explain the reasons why AURORA PUMP is able to offer you a modern, packaged, customer proven system.

FEATURES

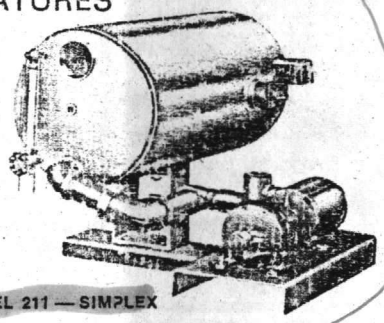

MODEL 211 — SIMPLEX

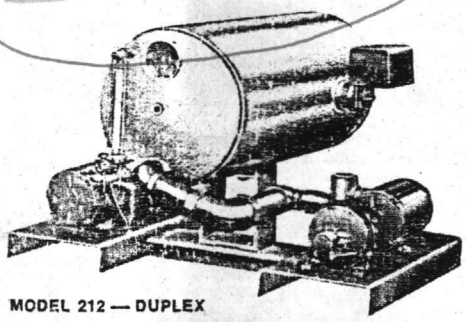

MODEL 212 — DUPLEX

1 GALVANIZED RECEIVER inside and out prevents corrosion, eliminates the need for special coatings and is 3/16" to insure long life. Receiver connections are threaded and include vent, inlet and drain.

2 BRASS FLOAT has adjustable travel to permit 1-1/2 times maximum return rate between stops. Combination float switch and alternator is standard on duplex units.

3 TEMPERATURES TO 190° F. water and selected for a minimum capacity of twice the rate of evaporation.

4 BRASS WATER LEVEL GAUGE glass assembly is furnished complete with shut-off valve and protector rods.

5 INTERCHANGEABLE DESIGN provides future system expansion with receiver connections for up to 2 pumps. Just add a pump and pipe it up.

6 COMPLETELY ASSEMBLED PIPING from receiver to pump. Included are expansion type elbows to eliminate pipe strain.

7 ACCESSIBILITY to pump and other components for easier maintenance. All pumps and piping are mounted beneath the receiver. The unit bolts to a steel base.

8 PUMPS designed for condensate applications will handle entrained vapor and air with liquid to eliminate vapor lock.

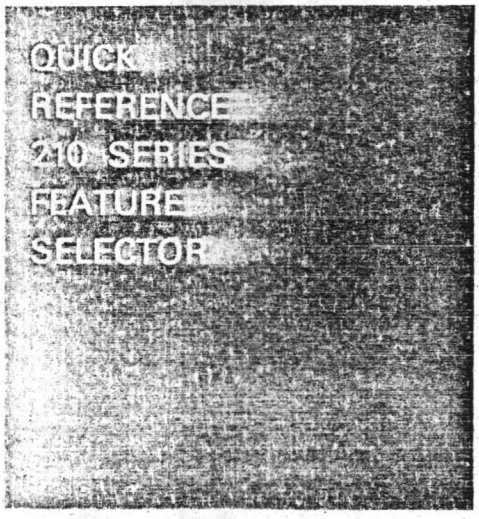

STANDARD

Quality Aurora Pumps
V.I.P. pump test
3/16" Gauge galv. steel receiver w/inlet, vent & drain connections
Simplex pump with float switch
Bronze fitted pump construction
Removable channel rings
Self-venting casings
Piping from receiver to pumps
Expansion type suction elbows
Gauge glass assembly
Factory assembled

OPTIONAL

Duplex pumps with combination float switch and alternator
Control panel prewired
Electric alternator
Thermometer
Pressure gauges
Coupling guards
A.S.M.E. receivers
Electrolytic corrosion inhibitors
Make-up feeder valve
Inlet "Y" strainer
Special units

TURBINE PUMP OPERATION AND OPTIONAL EQUIPMENT

STANDARD EQUIPMENT
SIMPLEX — Model 211
Receiver with float switch, sight gauge glass with gauge cock, support, expansion elbow, piping, pump, motor, base and coupling. RECOMMENDED OPTIONS: coupling guard, pressure gauge, thermometer, magnetic starter and one hand-off-auto switch mounted and wired complete.
DUPLEX — Model 212
Receiver with a combination float switch alternator assembly, sight gauge glass with gauge cock, support, expansion elbows and piping, two pumps (one operational and one standby), motors, bases and couplings. RECOMMENDED OPTIONS: coupling guards, pressure gauges, thermometer, NEMA 1 control panel with two starters, two hand-off-automatic switches and two selector switches, mounted and wired complete.

OPTIONAL EQUIPMENT
THERMOMETER provided with direct reading scale from 40° to 260° F.
A) Back angle
B) 3" Dial
MAKE-UP FEEDER VALVE — 3/4" includes electric solenoid, reverse action float switch and necessary fittings.
125# ASME CODE RECEIVERS of equal capacity.
ADDITIONAL PIPE TAPS such as vents in receiver as required.
MAGNESIUM ANODE provides electrolytic corrosion protection for the receiver.
ELECTRIC ALTERNATOR conveniently mounted and wired on duplex units.
MECHANICAL SEALS for single or two stage turbine pumps.
SPECIAL PUMPS such as centrifugals.
PRESSURE GAUGES on pump discharge.
COUPLING GUARDS provide protection.
DUPLEX UNITS completely assembled.
SPECIAL MOTORS — Voltages and enclosures.

PRINCIPLE OF OPERATION
The turbine pump derives its name from the many buckets machined into the periphery of the rotating impeller which permits development of a relatively high pressure in an efficient and economic manner. More pressure is developed within the turbine pump than with a comparable size centrifugal pump. The pumped liquid is directed by the water passage so that it circulates in and out of the buckets many times on its way from the pump inlet to the pump outlet. Additional energy is added to the liquid each time it passes through the buckets so the numerous passes generate a high discharge pressure. The pressure is developed without pulsations. While close clearances are used within the turbine pumps, there is no metal to metal contact. Volatile liquids are handled easily because a turbine pump readily handles vapor and air along with the liquid, thus eliminating the possibility of a vapor lock within the pump. Free-flowing and non-lubricating liquids are handled with a minimum of wear to pump parts because there is no metal to metal contact within the pump channel. The illustrations indicate the principle used in the handling of the liquid and developing of pressure in a regenerative turbine pump.

AURORA APCO TURBINE PUMP FEATURES
- Double suction minimizes axial thrust.
- Replaceable channel rings and impellers.
- Opposed discharges to balance radial loads (two stage).
- Interchangeable packing or mechanical seals. Seals are optionally available on single as well as two stage pumps.
- Large shaft for minimum deflections.
- Slingers protect bearings.
- O-rings prevent leakage.

TURBINE PUMPS

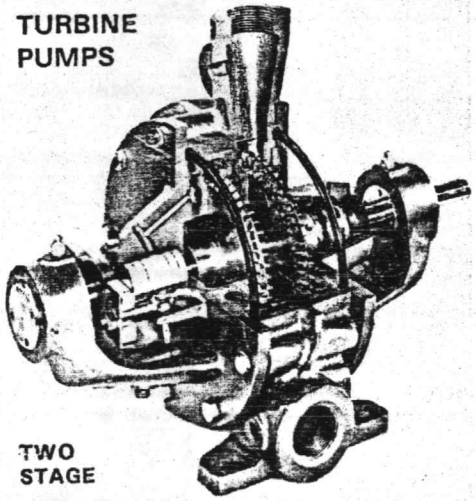

TWO STAGE

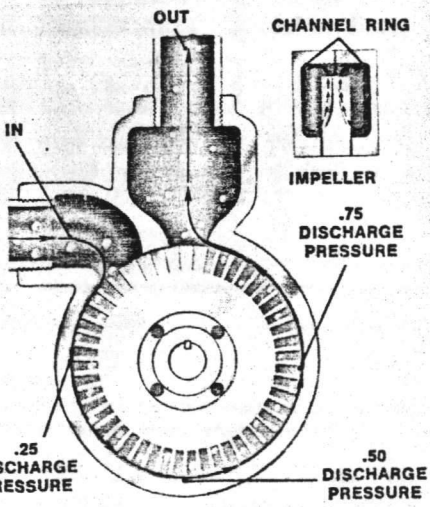

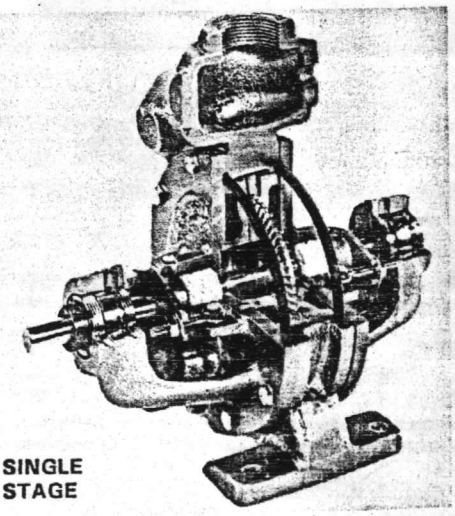

SINGLE STAGE

SELECTION TABLE—1750 R.P.M.

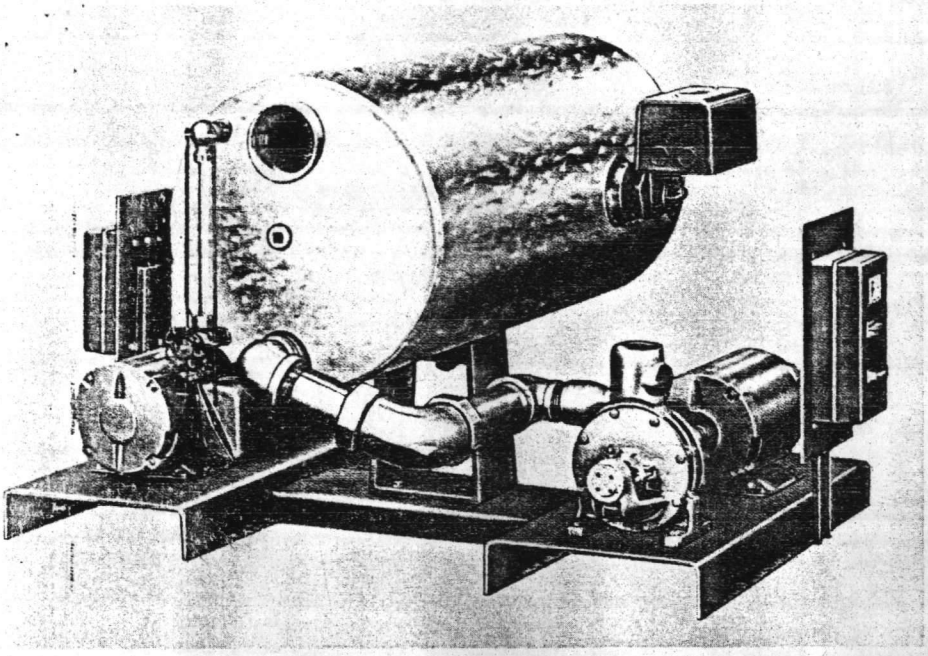

MAGNETIC STARTERS with overload and under-voltage protection are conveniently mounted on the unit. The starters are wired to the pump motors, and to the float switch or combination float switch and alternator. Rated for 3 phase, 1/3 H.P. and larger; and single phase 1 H.P. and larger. (Starters not required on single phase, 3/4 H.P. motors or less). On Simplex units, the starter is mounted in a general purpose enclosure. On Duplex units, magnetic starters are panel mounted in a NEMA 1 enclosure. Reset buttons are provided outside the starter enclosure for easy operation and service.

E.D.R.			2000	3000	4000	6000	8000	10,000	15,000	20,000	25,000	30,000	35,000	40,000	50,000	65,000	100,000
PUMP CAPACITY G.P.M.			3	4-1/2	6	9	12	15	22-1/2	30	37-1/2	45	52-1/2	60	75	97-1/2	150
RECEIVER	CAPACITY IN GALLONS		15	15	15	15	30	30	30	60	60	60	60	60	100	100	200
	DIAMETER (IN.)		14	14	14	14	16	16	16	22	22	22	22	22	24	24	30
	LENGTH (IN.)		30	30	30	30	38	38	38	38	38	38	38	38	50	50	66
	INLET (IN.)		2	2	2	2	3	3	3	3	3	3	3	3	3	3	4
PRESSURE — POUNDS PER SQUARE INCH	10	UNIT	15A35	15C4	15D4	15E4	30F4	30G4	30H4	60I4A	60M4	60M4	60P4	60R4	100M5	100N5	200J6
		H.P.	1/3	1/3	1/3	1/3	1/3	1/3	1/2	3/4	1	1	1-1/2	1-1/2	1-1/2	2	3
	15	UNIT	15A4	15C4	15D4	15E4	30F4	30G4	30H4	60I4A	60M4	60M4	60P4	60R4	100M5	100N5	200J6
		H.P.	1/3	1/3	1/3	1/3	1/3	1/3	1/2	1	1	1-1/2	1-1/2	1-1/2	2	3	3
	20	UNIT	15A4	15C4	15D4	15F4	30F4	30G4	30I4	60I4A	60M4	60P4	60P4	60L5	100N5	100P5	200J6
		H.P.	1/3	1/3	1/3	1/3	1/3	1/2	3/4	1	1-1/2	1-1/2	1-1/2	3	2	5	5
	30	UNIT	15C4	15C4	15E4	15F4	30G4	30H4	30I4A	60P4	60R4	60R4	60L5	60L5	100N5	100P5	200J6T
		H.P.	1/3	1/3	1/3	1/2	1/2	3/4	1-1/2	2	3	3	3	5	5	7-1/2	10
	40	UNIT	15D4	15D4	15E4	15F4	30G4	30I4	30I4A	60P4	60R4	60R4	60L5	60L5	100N5	100P5	200J6T
		H.P.	1/3	1/3	1/2	3/4	3/4	1	1-1/2	2	3	3	3	5	5	7-1/2	10
	50	UNIT	15D4	15E4	15F4	15G4	30I4	30I4	30P4	60R4	60K5	60K5	60L5	60N5	100P5	100P5	200K6T
		H.P.	1/3	1/2	3/4	1	1	1-1/2	2	3	3	3	5	5	7-1/2	7-1/2	15
	60	UNIT	15D4	15E4	15F4	15G4	30I4	30P4	30R4	60I5	60K5	60L5	60L5	60P5	100P5	100J6	200K6T
		H.P.	1/2	3/4	1	1	1-1/2	3	3	3	5	5	5	7-1/2	7-1/2	10	15
	75	UNIT	15E4	15F4	15G4	15R4	30R4	30R4	30I4TA	60K5	60K5	60L5	60P5	60P5	100J6	100K6	200K6T
		H.P.	3/4	1	1	1-1/2	2	2	3	3	5	5	7-1/2	10	10	10	15
	85	UNIT	15F4	15G4	15E4T	15G4T	30G4T	30I4T	30I4TA	60K5	60L5	60L5	60H6	60H6	100J6	100K6	
		H.P.	1	1	1	1-1/2	2	3	3	5	5	7-1/2	7-1/2	10	10	15	
	100	UNIT	15D4T	15E4T	15F4T	15G4T	30I4T	30I4TA	30I5	60K5	60L5	60G6	60J6	60K6	100G6T	100H6T	
		H.P.	1	1-1/2	1-1/2	2	3	3	3	5	7-1/2	10	10	10	10	15	
	115	UNIT	15E4T	15F4T	15F4T	15G4T	30I4T	30H5	30I5	60L5	60L5	60F6T	60F6T	60G6T	100H6T	100J6T	
		H.P.	1-1/2	1-1/2	2	2	3	3	5	7-1/2	7-1/2	10	10	15	15	20	

UNIT NUMBER EXAMPLE: 15D4 DESIGNATES 15 GALLON RECEIVER AND D4 SIZE PUMP. FOR SELECTIONS NOT SHOWN, PLEASE REFER TO FACTORY.

NOTE: TABLE SELECTIONS ARE FOR INTERMITTENT OPERATION — IF SYSTEM REQUIRES CONTINUOUS OPERATING PUMPS, CONSULT FACTORY FOR PUMP SELECTION.

ENGINEERING SPECIFICATIONS AND DIMENSIONS

The contractor shall furnish (and install in location as shown on the plan) an Aurora 210 Series Model 211 (Simplex) ☐ — Model 212 (Duplex) ☐ Condensation Return Unit. Unit ..... for handling condensate returns from ..... square feet of direct radiation, when discharging against a pressure of..... P.S.I. at the pump. The unit is to include bronze fitted turbine type pumps and the impeller(s) shall be hydraulically balanced and shall be designed to pass vapor with the water. Removable channel ring design will permit replacement of the channels only. Covers shall incorporate the bearing arms and stuffing boxes for packing or mechanical seals. The pump(s) to be flexible coupled to NEMA motor(s) of.....H.P.,..... phase, ... Hertz, ... voltage, ... R.P.M., (D.P.) (T.E.) (EX.PR.) enclosure. The pump-motor combination(s) to be base mounted to one dished head galvanized receiver of ..... gallons capacity. All receivers shall include inlet, vent, drain and gauge glass connections. One optional back angle thermometer and std. brass water level gauge glass assembly complete with shut-off valve and protector rods shall be mounted to the receiver. Simplex unit to be furnished with one enclosed float switch assembly. Duplex unit to be furnished with one combination float switch and alternator assembly. Optional magnetic starter(s) with overload and under voltage protection shall be mounted and wired to the pump motor(s) and float switch (Simplex units) or mechanical alternator (Duplex units). The Starter(s) shall be mounted in a NEMA 1 enclosure.

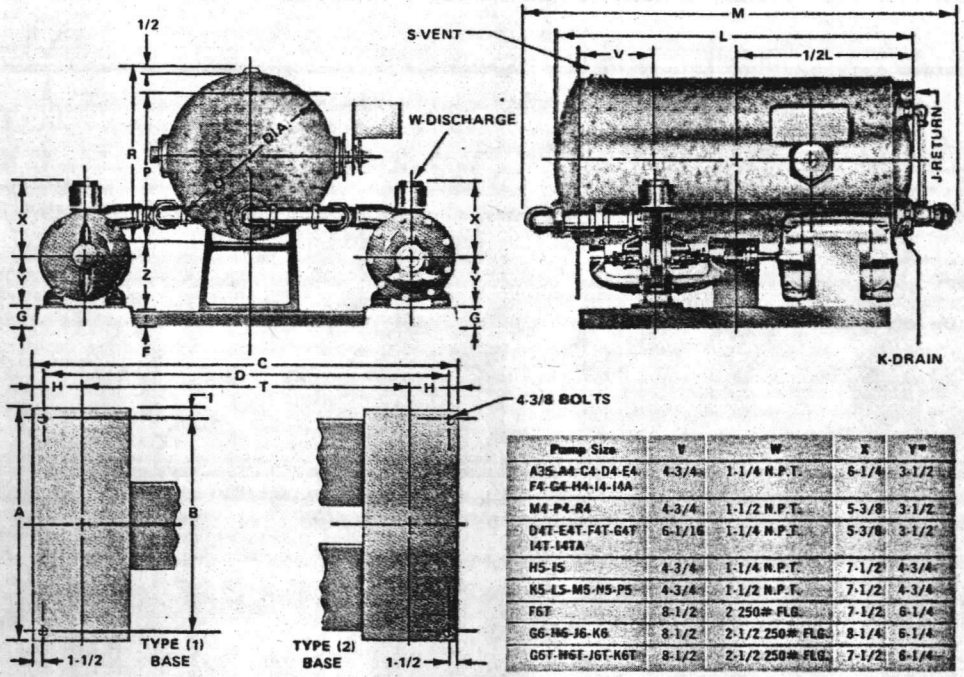

Pump Size	V	W	X	Y*
A35-A4-C4-D4-E4-F4-G4-H4-I4-I4A	4-3/4	1-1/4 N.P.T.	6-1/4	3-1/2
M4-P4-R4	4-3/4	1-1/2 N.P.T.	5-3/8	3-1/2
D4T-E4T-F4T-G4T-I4T-I4TA	6-1/16	1-1/4 N.P.T.	5-3/8	3-1/2
H5-I5	4-3/4	1-1/4 N.P.T.	7-1/2	4-3/4
K5-L5-M5-N5-P5	4-3/4	1-1/2 N.P.T.	7-1/2	4-3/4
F6T	8-1/2	2 250# FLG.	7-1/2	6-1/4
G6-H6-J6-K6	8-1/2	2-1/2 250# FLG.	8-1/4	6-1/4
G6T-H6T-J6T-K6T	8-1/2	2-1/2 250# FLG.	7-1/2	6-1/4

Type Base	Base Size	A	B	C	D	E	G	H	T
(1) 15, 30 & 60 Gallon Receiver	1	26	24	38	35	2	2-5/8	5	28
	2	27	25	42	39	2	3	6	30
	3	30	28	42	39	2	3	6	30
	4	34	32	50	47	2-5/8	4	6-1/2	37
	5	44	42	64	61	3	3-3/8	7-1/2	49
	6	48	46	70	67	3	4	9	52
(2) 100 & 200 Gallon Receiver	1	25	23	44	41	2	2-5/8	5	34
	2	27	25	48	45	2	3	6	36
	3	30	28	48	45	2	3	6	36
	4	34	32	54	51	2-5/8	4	6-1/2	41
	5	38	36	56	53	2	2-7/8	6	44
	6	44	42	64	61	3	3-3/8	7-1/2	49
	7	48	46	70	67	3	4	9	52

Pedestal	Z	Mtr. Frame	Y*	Mtr. Frame	Y*
A	6	48	3	213T-215T	5-1/4
B	8-1/2	56-143T-145T	3-1/2	254T-256T	6-1/4
C	11	182T-184T	4-1/2	See Note #9	

Gal. Cap.	Type	I	K	L	M	P	Q	R	S
15	(1)	2	3/4	30	45	12-1/2	14	14-1/2	1
30	(1)	3	3/4	38	55	13-1/4	16	16-1/2	1
60	(1)	3	3/4	38	55	19-1/4	22	22-1/2	1
100	(2)	3	1-1/4	50	70	21-1/4	24	24-1/2	1-1/4
200	(2)	4	1-1/4	66	85	26-3/4	30	30-1/2	1-1/4

BASE SELECTION

Unit Number	HP	Base Type	Size
15A35 TO 15F4	1/3 TO 3/4	1	1
15F4 TO 15R4	1 TO 1-1/2	1	2
30F4 TO 30I4	1/3 TO 3/4	1	1
30I4 TO 30I4A	1 TO 1-1/2	1	2
30H5 TO 30I5	3 TO 5	1	4
30G4T TO 30I4T	1 TO 1-1/2	1	2
30I4T	3	1	3
30I4TA	2	1	2
30I4TA	3	1	3
30P4	2	1	3
30R4	1-1/2 TO 2	1	2
60I4A	3/4	1	1
60I4A TO 60R4	1 TO 2	1	2

BASE SELECTION

Unit Number	HP	Base Type	Size
60R4	3	1	3
60I5 TO 60L5	3 TO 5	1	4
60L5 TO 60F6T	7-1/2 TO 10	1	5
60G6T	15	1	6
100M5 TO 100N5	1-1/2 TO 2	2	3
100N5 TO 100P5	3 TO 5	2	4
100P5 TO 100J6	7-1/2 TO 10	2	5
100K6 TO 100J6T	10 TO 20	2	6
200J6 TO 200K6	3 TO 7-1/2	2	5
200J6T TO 200K6T	10 TO 15	2	6
2004R TO 2004RA	ALL	2	7

LIMITATIONS

MAX. RECEIVER INTERNAL PRESSURE	MAXIMUM DISCHARGE PRESSURE	MAX. TEMP. LIMIT ON PUMP SUCTION
5 P.S.I.G.	115 P.S.I.G.	190° F.

MOTOR SPECIFICATIONS

Drip-proof NEMA rated.....open drip-proof steel shaft, 1750 R.P.M., dual voltage, single or three phase.

THREE PHASE — 60/50 Hertz, 200-230/460 volt.

SINGLE PHASE — 60 Hertz, 115/230 volt. All 1-1/2 H.P. and smaller equipped with thermal overload protection.

Explosion-proof and totally enclosed motors also available.

MATERIAL OF CONSTRUCTION

PUMP PART	MATERIAL
Casing	Cast Iron ASTM A48
Covers	Cast Iron ASTM A48
Channel Rings	Cast Iron ASTM A48
Impeller	Bronze ASTM B62
Shaft	Stainless Steel AISI-416
Packing Glands	Cast Iron ASTM A48
Center Spacer	Cast Iron ASTM A48
Packing	Interwoven, graphited asbestos, die molded, diagonally cut
Receiver	3/16" Galvanized Steel
Float	Brass ASTM B-36
Gauge Glass Fitting	Brass ASTM B-36
Base and Supports	Steel Commercial

NOTES

1. All dimensions in inches.
2. Not for construction purposes unless certified.
3. Duplex unit with mechanical alternator illustrated.
4. All connections are threaded.
5. Conduit box and/or capacitor not shown as location and dimensions vary with each motor manufacturer.
6. Flanges in accordance with American Std.
7. Write for Bulletin 110 for additional pump details.
8. All simplex receivers have a blanked off suction opening available for possible future conversion to duplex construction.
9. *Always use max. "Y" dimension given.
10. Aurora Pump reserves the right to make revisions to this bulletin and related information without notice.

AURORA PUMP
A UNIT OF GENERAL SIGNAL
800 AIRPORT ROAD • NORTH AURORA, ILLINOIS • 60542

SALES OFFICES IN ALL MAJOR CITIES AND COUNTRIES
Refer to "Pumps" in the yellow pages of your phone directory

MANUFACTURING FACILITIES ARE LOCATED IN THE FOLLOWING CITIES: NORTH AURORA, ILLINOIS • CITY OF INDUSTRY (GREATER LOS ANGELES), CALIFORNIA

Export Dept.: No. Aurora, Illinois, Cable Address "NYABINT"

OM 9-79 KC PRTD. IN U.S.A.

UNIT FEATURES

1
2
3
4
5
6
7
8

FLOAT ADJUSTMENT

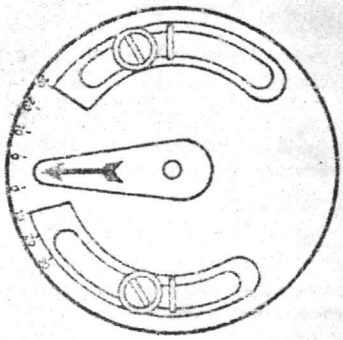

EXPANSION ELBOW

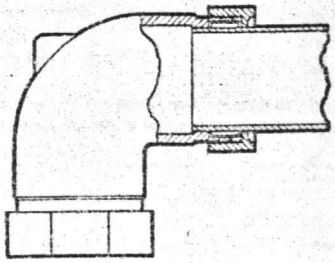

UNIT OPERATION

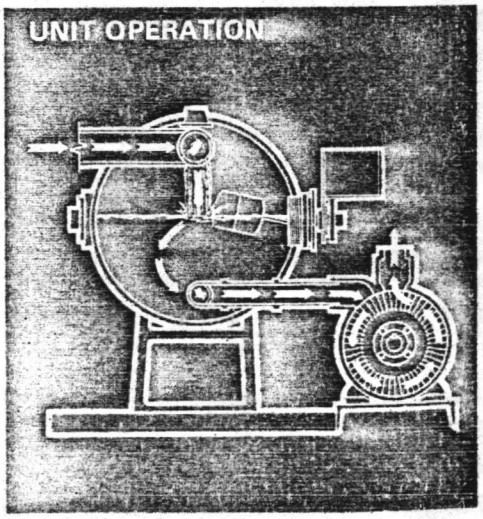

rec'd T&R 28 Dec 82

CONTRACTING DIVISION
NSN DESCRIPTION

4520-00-C00-5959

PUMP, CONDENSATE, HORIZONTAL, SIMPLEX, COMPLETE ASSY, W/30 GAL. STEEL RECEIVER, FLOAT AND FLOAT, SWITCH, GAUGE GLASS, 15 GPM PUMP CAP, 3" RETURN OPENING 85 PSI DISCHARGE PRESSURE. MOTOR RATING 3 HP, 3 PHASE, 220 V, 60 CY, 1750 RPM. FLEXIBLE COUPLING DRIVE, MOUNTED & ASSEMBLED ON STEEL BASE. MECHANICAL SEALS.

10 more
Doc 2972966
w/o Purchase Order

MFG NAME: AURORA PUMP DIV. P/N: 30 I4TS-3

ORDER NUMBER	VENDOR NAME	QUANTITY	U/I	U/P
82M8121	FRANK A. KRISTEL	17	EA	729.00

28 Dec 82
contacted Mrs Sloan
this incomplete.
She had deactd
4/6/81 ~~[illegible]~~
VOB
She will update
desc to the
4/6/81 card
& send me a
copy of readout

ITEM NO._____ QTY _____U/I_____U/P_____E/P_____

3 Jan 83
Mrs Sloan - setups
to run copy full card
from T&R look time
sent to copy this as she
[illegible]

T + R: Bldg 1011
attn: Virg. Butler

next copy

SPEC.

STOCK NO.

4520-00-C00-5959

DESCRIPTION:

Pumping unit, condensate, heating, horizontal simplex unit, consists of 1 each pump with float and float switch, 1 each receiver, 1 each electrical motor, all components mounted and assembled on a steel base.

Pump to be single stage, 15 GPM pumping capacity, 85 PSI discharge pressure, 3 inch return opening. Receiver to be steel, minimum 30 gal capacity. Finish inside and outside of receiver to be galvanized or inside coated with a corrosion-resistant material. Electric motor rating to be 3 HP, 3 PH, 60 cycle, 1750 RPM, 208/230/460 volts. Seals to be mechanical or packing. Coupling to be flexible.
NOTE: Request one copy of parts list and standard operating instructions to be furnished with each order. Parts list to specify name of each item and manufacturer part number and manufacturer name and a notation of where to order parts.
NOTE: Previous description change dtd 3/20/81
U/I EA U/P $806 Description Change Shop Stores 4/6/81 Virginia Butler

	SCHEDULE	RD	NRD	DATE	ORDER NO.	VENDOR	QTY.	UNIT PRICE	REJECT CODE
1									
2									
3									
4									
5									
6									

RRNT-22027 A

STOCK NO.

	SCHEDULE	RD	NRD	DATE	ORDER NO.	VENDOR	QTY.	UNIT PRICE	REJECT CODE
7									
8									
9									
10									
11									
12									
13									
14									
15									
16									
17									
18									
19									
20									
21									
22									
23									
24									
25									
26									
27									

PURCHASE DESCRIPTION WORKSHEET
MCBCL 4225/2

type file

SPECIFICATIONS

STOCK NO. 4520-00-C00-5959

Pumping unit, condensate, heating, horizontal simplex unit, consists of 1ea pump with float and float switch, 1ea receiver, 1ea electrical motor, all components mounted and assembled on a steel base.

Pump to be single stage, 15 GPM pumping capacity, 85 PSI discharge pressure, 3 in return opening. Receiver to be steel, minimum 30 gal capacity. Finish inside and outside of receiver to be galvanized or inside coated with a corrosion resistant material. Electric motor rating to be 3 HP, 3 PH, 60 cycle, 1750 RPM, 208/230/460 volts. Seals to be mechanical or packing. Coupling to be flexible.

Note: Request one copy of parts list and standard operating instructions to be furnished with each order. Parts list to specify name of each item and manufacturer part number & mfg name and a notation of where to order parts.

Note: Previous description change dtd 3/30/81

U/I EA U/P 806.00

☐ NEW ITEM
☒ DESCRIPTION CHANGE

☒ SHOP STORES
☐ SELF SERVICE CENTER

DATE 4/6/81

INITIALS ZCB

MAY 28 1987 read entire description to Jack Chase
Plumbing Shop - was interest in electrical
Characteristics & whether simpler or not -
Did not elaborate on why needed info. VCB
9:45 am.

6 Nov 81
Rec'd purchase order for wood
for Beasley - Claimer & Estimator -
advised no new literature
on aurora VCB

OPNAV 5216/144 (REV. 6-70)
S/N 0107-LF-778-8099

DEPARTMENT OF THE NAVY

Memorandum

DATE: 27 March 1981

FROM Contracting Officer

TO Tech & Research

SUBJ Description cards

The attached description cards are returned for additional information and review.

Stock #6105-01-C00-7877
Provides description for 120 volt motor. This description is considered inadequate; it does not specify horsepower ratings, rpm ratings, frame numbers of the motor, or any other salient features necessary to achieve competition. It is requested that appropriate information be provided.

NSN 4520-00-C00-5959
for pumping unit is returned for additional information. It is felt that current solicitation is unnecessarily restrictive. It is requested that the following items be addressed: justification for requirement that the tank be galvanized both inside and outside. Within the normal commercial practive in this area it is noted that only one manufacturer produces a tank that is galvanized on the inside, whereas others produce tanks that are coasted with a corrosion-resistant material on the inside. I suspect that these coatings might be more effective in controlling the corrosion than the galvanizing might be. I, therefore, consider the specification unnecessarily restrictive. Additionally, the description should indicate the type of seals to be provided, whether they are mechanical seals or whether they are packing. It should also specify the type of coupling to be installed; whether it is to be a flexible coupling or a solid coupling. Please explain the purpose of the note that is attached to the requirement. I can understand this on an occasional purchase but I do not see a requirement that this be included with each item ordered for stock.

W. A. TWEED

OPNAV 5216/144 (REV. 6-70)
S/N 0107-LF-778-8099

DEPARTMENT OF THE NAVY

Memorandum

DATE: 27 March 1981

FROM Contracting Officer

TO Tech & Research

SUBJ Description cards

The attached description cards are returned for additional information and review.

Stock #6105-01-C00-7877
Provides description for 120 volt motor. This description is considered inadequate; it does not specify horsepower ratings, rpm ratings, frame numbers of the motor, or any other salient features necessary to achieve competition. It is requested that appropriate information be provided.

NSN 4520-00-C00-5959
for pumping unit is returned for additional information. It is felt that current solicitation is unnecessarily restrictive. It is requested that the following items be addressed: justification for requirement that the tank be galvanized both inside and outside. Within the normal commercial practive in this area it is noted that only one manufacturer produces a tank that is galvanized on the inside, whereas others produce tanks that are coasted with a corrosion-resistant material on the inside. I suspect that these coatings might be more effective in controlling the corrosion than the galvanizing might be. I, therefore, consider the specification unnecessarily restrictive. Additionally, the description should indicate the type of seals to be provided, whether they are mechanical seals or whether they are packing. It should also specify the type of coupling to be installed; whether it is to be a flexible coupling or a solid coupling. Please explain the purpose of the note that is attached to the requirement. I can understand this on an occasional purchase but I do not see a requirement that this be included with each item ordered for stock.

W. A. TWEED

OPNAV 5216/144 (REV. 6-70)
S/N-0107-778-8097

DEPARTMENT OF THE NAVY

Memorandum

Sw Desc chge.
TO P&C

DATE: 20 Mar 1981

FROM: Base Maint. Emergency Ser. General Foreman

TO: Tech. & Research Branch, Bldg. 1011, DSSC
ATTN: Mrs. Butler

SUBJ: Pumping units, condensate; description change

Pumping unit, condensate, heating, horizontal simplex unit, consists of 1 each pump with float and float switch, 1 each receiver, 1 each electric motor, all components mounted and assembled on a steel base. Pump to be single stage, 15 GPM pumping capacity, 85 PSI discharge pressure, 3 in. return opening. Receiver to be steel, galvanized both inside and outside, minimum 30 gal capacity. Electric motor rating to be 3 HP, 3 PH, 60 cycle, 1750 RPM, 208/230/460 volts. Seals and coupling drives to be standard for the manufacturer's products.

NOTE: Request one copy of parts list and standard operating instructions be furnished with each order. Parts list to specify name of each item and manufacturer part number.

R. Avant

R. Avant
Maint Gen Foreman

☆ U. S. GOVERNMENT PRINTING OFFICE: 1973—739-113/2084 Region No. 3-11

B01986

PURCHASE DESCRIPTION WORKSHEET
MCBCL 4225/2

See new format type file 26 Butler

See attached memo from Pete Avant Maintenance

SPECIFICATIONS

STOCK NO. 4520-00 C00-5959

Pumping unit, condensate, heating, horizontal simplex unit, consists of 1 ea pump with float and float switch, 1 ea receiver, 1 ea electric motor, all components mounted and assembled on a ~~on~~ steel base.

Pump to be single stage, 150 PM pumping capacity, 85 PSI discharge pressure, 3 in return opening.

Receiver to be steel, galvanized both inside and outside, minimum 30 gal capacity.

Electric motor rating to be 3 HP, 3 PH, 60 cycle, 1750 RPM, 208/230/460 volts

Seals and coupling drives to be standard for the manufacturer's product.

Note: Request one copy ~~to~~ of parts list and standard operating instructions be furnished with each order. Parts list to specify name of each item and mfg P/N.

U/I EA U/P 806.00

☐ NEW ITEM
☒ DESCRIPTION CHANGE

☒ SHOP STORES
☐ SELF SERVICE CENTER

DATE 20 Mar 81

INITIALS VGB

See description for item

REQUEST FOR ASSIGNMENT/ADOPTION OF FSN

FROM: Commanding General (MLD) Marine Corps Base Camp Lejeune, North Carolina, 28542	TO: Commanding General MCSA (P840) 1100 S. Broad St. Philadelphia, Pa. 19146

PART I

1. REQUEST NO.:	2. LOCAL STOCK NO. (If applicable):	3. FSN (If known)
MLD- 0121-76	4520-00-C00-5959	

4. ITEM NAME:	5. EQUIPMENT APPLICATION/USE (If known):
Pump	Base Plumbing Shop

6a. MFR./NON-MFR. NAME(S) & ADDRESS(ES) OR CODE(S):	6b. PART/DRAWING NO.(S):
a. 04579	b. 3014T-3
a.	b.
a.	b.
a.	b.

7. UNIT OF ISSUE:	8. UNIT OF MEASURE:	9. UNIT PRICE:
Ea.		786.63

10. ITEM IDENTIFICATION:

Pump, Condensate, Horizontal, 30 gallon steel tank, 15 GPM Pump Capacity, 3 inch return, 85PSI discharge pressure.

11. SOURCE OF FSN:

CMCRL ☐ OTHER ☐ IF OTHER, INDICATE SOURCE _____

12. ANNUAL EST. USAGE:	13. REQUESTOR'S NAME:	14. CODE/PHONE NO.	15. DATE:
12	Jw Jones	21P/ 5163	APR 7 1976

PART II

16. FROM:	17. TO:
Commanding General MCSA (P84_) 1100 S. Broad St. Philadelphia, Pa. 19146	Commanding General (MLD) Marine Corps Base Camp Lejeune, North Carolina 28542

18. ACTION TAKEN:

☐ FSN _____ ASSIGNED BY MCSA

☐ FSN _____ APPLIES

☐ FSN _____ PHRASE CODE _____ TO

NSN _____

☐ RETURNED FOR FOLLOWING REASON _____

19. MANAGEMENT DATA: SoS U/I U/P MEC SAC

20. ASSIGNOR'S NAME:	21. RELEASED BY:	22. DATE:

File

PURCHASE DESCRIPTION WORKSHEET
MCBCL 4225/2

SPECIFICATIONS

STOCK NO. 4520-000-5959

Pump, Condensate, Horizontal, simplex, Complete assy, with 30 gal. steel receiver, Float and float switch, gauge glass, 15 GPM Pump capacity, 3 inch Return opening, 85 PSI discharge pressure, Motor rating: 3 H.P., 3 Phase, 220 Volts, 60 cycle, 1750 RPM. Flexible coupling drive. Mounted and assembled on steel base. Mechanical seals

Mfg: Aurora Pump Div 00579
P/N: 301XT-3

SOS: Mechanical Eng. Co.
Charlotte, N.C.

See description change
Jemarsh

U/I EA U/P 356.10

☒ NEW ITEM
☐ DESCRIPTION CHANGE

☒ SHOP STORES
☐ SELF SERVICE CENTER

DATE MAR 2 1970

INITIALS

Model FD1822+DR70268FWFI.

Mod 4520 3HP

77-16

I TDRBE

Pumping Unit, condensate, horizontal heating electric motor driven.

77-16611

Type TDRBE

77-16685-11

I4Q$-

A-15
B-15
C-15

~~Pump~~ Tank Float switch

9037

77-16665-1-11

H64-52.

Series B

Tank float

58369 Square D.

HECKED BOX PPLIES	|X| ORDER FOR SUPPLIES OR SERVICES	|_| REQUEST FOR QUOTATIONS NO. return COPY(ies) OF THIS QUOTE BY (THIS IS NOT AN ORDER. See DD Form 1155r)	Page 1 of 03

. CONTRACT/PURCH ORDER NO. M6700186P3381	2. DELIVERY ORDER NO.	3. DATE OF ORDER 86 AUG 19	4. REQUISITION/PURCH REQUEST NO. SEE SCHEDULE	5. This contract is a rated order under DPAS (15 CFR 350) DO

.ISSUED BY code |_____| CONTRACTING DIVISION P O BOX 8368 MCB CAMP LEJEUNE NC 28542-8368 ISAAC L EVANS BRANCH 1 919 451-3011	7. ADMINISTERED BY code |_____| CONTRACTING DIVISION P O BOX 8368 MCB CAMP LEJEUNE NC 28542-8368	8. DELIVERY FOB |_| DEST |X| OTHER see schedule if other

. CONTRACTOR/QUOTER code |00MDT2S| Facility Code |_____| 9192750791 * Name and* MECHANICAL EQUIPMENT CO INC Address * P O BOX 16272 * GREENSBORO NC 27408	10 DELIVER TO FOB POINT BY: 86 OCT 23 12. DISCOUNT TERMS NET 30 DAYS 13. MAIL INVOICES TO: SEE BLOCK 15	11. Check if business is |X| small |_| small/disadv |_|women-owned	

4. Ship To: code |_____| FREIGHT TRAFFIC BRANCH MRK FOR: M67001 86P3381 BLDG 1011 MCB CAMP LEJEUNE NC 28542-5400	15. PAYMENT WILL BE MADE BY: code |_____| BASE DISBURSING OFFICER ***MAIL INVOICES TO ADDRESS*** IN BLOCK 7 ABOVE 28542-5000	MARK ALL PACKAGES AND PAPERS WITH CONTRACT OR ORDER NUMBER

6.
DLVY \|_\| This delivery order is subject to instructions contained on this side of form only and is issued on another Government agency or in accordance with and subject to terms and conditions of above numbered contract.

PURCH \|X\| Reference your 86TD930 furnish the following on terms specified herein, including for U.S. purchases,

GENERAL PROVISIONS OF PURCHASE ORDER ON DD Form 1155r(Except Clause No. 12 applies only if this box \|_\| is checked AND NO 14 IF THIS BOX \|_\| IS CHECKED); special provisions ;and delivery as indicated.

\|if Checked, Additional General Provisions apply: Supplier shall sign "Acceptance" on DD Form 1155r and return copies.

7. ACCOUNTING AND APPROPRIATION DATA/LOCAL USE

17X4913.0000 000 6B476 0 067001 1C 067004 53000

8. TEM NO	19. SCHEDULE OF SUPPLIES/SERVICES	20. QUANTITY ORDERED/ ACCEPTED*	21. UNIT	22. UNIT PRICE	23. AMOUNT

SEE ATTACHED SCHEDULE(S)

ITEMS: 1

IF QUANTITY ACCEPTED BY THE GOVERNMENT IS AME AS QUANTITY ORDERED, INDICATE BY ./ ARK. IF DIFFERENT, ENTER ACTUAL QUANTITY CCEPTED BELOW QUANTITY ORDERED & ENCIRCLE	24. UNITED STATES OF AMERICA BY: E. T. COLE, JR CONTRACTING/ORDERING OFFICER	25. TOTAL 9470.00 29. DIFFER ENCES	

6. QUANTITY IN COLUMN 20 HAS BEEN: |_|INSPECTED |_|RECEIVED |_|ACCEPTED AND CONFORMS TO THE CONTRACT EXCEPT AS NOTED DATE SIGNATURE OF AUTHORIZED GOVERNMENT REP.	27. SHIP.NO. |_|PARTIAL |_| FINAL	28.D.O.VOUCHER NO 32. PAID BY	30. INITIALS 33.AMT VERIFIED CORRECT FOR
6.I CERTIFY THIS ACCOUNT CORRECT & PROPER FOR PAYMENT DATE SIGNATURE AND TITLE OF CERTIFYING OFFICER	31. PAYMENT |_|COMPLETE |_|PARTIAL |_|FINAL		34.CHECK NUMBER 35.BILL OF LADING NO.
7.REC'D 38. REC'D BY	39.DATE REC'D	40.TOTAL CONT. 41.S.R. ACCOUNT NUMBER	42. S.R.VOUCHER No. HOLD

DD1155

MECHANICAL EQUIPMENT CO INC

ITEM NO	SUPPLIES/SERVICES	QUANTITY	UNIT	UNIT PRICE	AMOUNT

THIS CONTRACT INCORPORATES THE FOLLOWING CONTRACT CLAUSES BY REFERENCE, WITH THE SAME FORCE AND EFFECT AS IF THEY WERE GIVEN IN FULL TEXT. I. FEDERAL ACQUISITION REGULATION (48CFR CHAPT 1) CONTRACT CLAUSES & II. DOD FAR SUPPLEMENT (48CFR CHAPT 2) CONTRACT CLAUSES.

FAR 52.210-5	NEW MATERIAL	APR 1984
FAR 52.222-26	EQUAL OPPORTUNITY	APR 1984
FAR 52.222-36	AFFIRMATIVE ACTION FOR HANDICAPPED WORKERS	APR 1984
FAR 52.222-4	CONTRACT WORK HOURS AND SAFETY STANDARDS -- OVERTIME COMPENSATION-- GENERAL	APR 1984

MOST FAVORED CUSTOMER ASSURANCE: THE CONTRACTOR AGREES THAT THE PRICES FOR THE SUPPLIES OR SERVICES FURNISHED UNDER THIS CONTRACT ARE AS LOW OR LOWER THAN THOSE CHARGED THE SUPPLIER'S MOST FAVORED CUSTOMER FOR COMPARABLE QUANTITIES UNDER SIMILAR TERMS AND CONDITIONS, IN ADDITION TO ANY DISCOUNTS FOR PROMPT PAYMENT.

TRANSPORTATION CHARGES ESTIMATED NOT TO EXCEED $150.00. ALL TRANSPORTATION CHARGES SHALL BE PREPAID AND LISTED ON DEALERS INVOICE AS A SEPARATE ITEM. IN THE EVENT TRANSPORTATION CHARGES EXCEED THE ESTIMATED AMOUNT, INVOICES MUST BE SUBSTANTIATED BY PAID RECEIPTS OR CERTIFIED TRUE COPIES OF FREIGHT BILLS.

IMPORTANT NOTICE: INQUIRIES RELATING TO THIS ORDER SHALL BE ADDRESSED TO THE ATTENTION OF: CONTRACT ADMINISTRATOR, BUYING BRANCH 1, TELEPHONE (919) 451-3011. INVOICES MUST CITE BUYING BRANCH 1 AND THE APPLICABLE PURCHASE/DELIVERY ORDER NUMBER. THE INVOICES WILL BE RETURNED IF THE BUYING BRANCH AND ORDER NUMBER ARE NOT CITED ON THE INVOICE.

(CONTINUED)

MECHANICAL EQUIPMENT CO INC

ITEM NO	SUPPLIES/SERVICES	QUANTITY	UNIT	UNIT PRICE	AMOUNT
(CONT'D)					
0001	452000C005959 M6700161890950	10	EA	947.00	9470.00

PRI: 14

PUMPING UNIT, CONDENSATE, HEATING, HORIZONTAL, SIMPLEX, UNIT CONSISTS OF RECEIVER WITH FLOAT SWITCH, SIGHT GAUGE GLASS WITH GAUGE COCK, SUPPORT, EXPANSION ELBOW, PIPING, PUMP, MOTOR, BASE AND FLEXIBLE COUPLING. COMPLETE PACKAGE TO BE PREPIPED AND MOUNTED ON A ONE PIECE COMMON BASE. SPECIFIC INFORMATION ON COMPONENTS AS FOLLOWS: RECEIVER TO BE CYLINDRICAL-16 IN. DIA, 38 IN LG, 3/16 IN THICK STEEL-GALVANIZED INSIDE AND OUTSIDE, TO HAVE BRASS FLOAT AND ENCLOSED FLOAT SWITCH ASSY; BRASS WATER LEVEL GAUGE ASSY COMPLETE W/SHUT OFF VALVE AND PROTECTOR RODS. ;TURBINE PUMP, CAST IRON, BRONZE IMPELLER, STAINLESS STEEL SHAFT, TO BE BOLTED TO BASE, 15 GPM CAPACITY, 3 IN INLET, 85 PSI DISCHARGE PRESSURE, 10,000 EDR, INTERCHANGEABLE PACKING; ELECTRIC MOTOR, 3 HP, DRIP PROOF NEMA RATED, OPEN DRIP-PROOF, STEEL SHAFT, 1750 RPM, DUAL VOLTAGE, 200-300/460V, 60HZ. 3-PHASE MOTOR TO BE BOLTED TO BASE.
MFG: AURORA PUMP, A UNIT OF GENERAL SIGNAL CORP., 800 AIRPORT RD., NORTH AURORA, IL 60542

MARK FOR: MMLV65

FOB POINT: NORTH AURORA, IL

(END PAGE)

CHECKED BOX APPLIES

|X| ORDER FOR SUPPLIES OR SERVICES

|_| REQUEST FOR QUOTATIONS NO.
return COPY(ies) OF THIS QUOTE BY
(THIS IS NOT AN ORDER. See DD Form 1155r)

1. CONTRACT/PURCH ORDER NO.	2. DELIVERY ORDER NO.	3. DATE OF ORDER	4. REQUISITION/PURCH REQUEST NO.	5. This contract is a rated order under DPAS (15 CFR 350) DO
M6700185P1308		85 SEP 05	SEE SCHEDULE	

6. ISSUED BY code |_____|
CONTRACTING DIVISION
P O BOX 8368 MCB
CAMP LEJEUNE NC 28542-8368
PEGGY BRYDON BRANCH I 919 451-3011

7. ADMINISTERED BY code |_____|
CONTRACTING DIVISION
P O BOX 8368 MCB
CAMP LEJEUNE NC 28542-8368

8. DELIVERY FOB
|X| DEST
|_| OTHER
see schedule if other

9. CONTRACTOR/QUOTER code |00AP93S| Facility Code |_____|
*
Name and* ACORN SPECIALTY & SUPPLY CO
Address * P O BOX 3727
* OMAHA NB 68103-0727

10 DELIVER TO FOB POINT BY:
85 NOV 09

11. Check if business is
|X| small
|_| small/disadv
|_| women-owned

12. DISCOUNT TERMS
NET

13. MAIL INVOICES TO:
SEE BLOCK 7

14. Ship To: code |_____|
FREIGHT TRAFFIC BRANCH
MRK FOR: M67001 85P1308
BLDG 1011 MCB
CAMP LEJEUNE NC 28542-5400

15. PAYMENT WILL BE MADE BY: code |_____|
BASE DISBURSING OFFICER
MAIL INVOICES TO ADDRESS
IN BLOCK 7 ABOVE 28542-5000

MARK ALL PACKAGES AND PAPERS WITH CONTRACT OR ORDER NUMBER

16. TYPE
DLVY |_| This delivery order is subject to instructions contained on this side of form only and is issued on another Government agency or in accordance with and subject to terms and conditions of above numbered contract.
PURCH |X| Reference your 85T0584 furnish the following on terms specified herein, including for U.S. purchases,

GENERAL PROVISIONS OF PURCHASE ORDER ON DD Form 1155r(Except Clause No. 12 applies only if this box |_| is checked AND NO 14 IF THIS BOX |_| IS CHECKED); special provisions ;and delivery as indicated.

|_| if Checked, Additional General Provisions apply: Supplier shall sign "Acceptance" on DD Form 1155r and return ____ copies.

17. ACCOUNTING AND APPROPRIATION DATA/LOCAL USE

17X4913.0000 000 5B461 0 067001 1C 067004 53000

18. ITEM NO	19. SCHEDULE OF SUPPLIES/SERVICES	20. QUANTITY ORDERED/ ACCEPTED*	21. UNIT	22. UNIT PRICE	23. AMOUNT

SEE ATTACHED SCHEDULE(S)

ITEMS: 1

*IF QUANTITY ACCEPTED BY THE GOVERNMENT IS SAME AS QUANTITY ORDERED, INDICATE BY ./ MARK. IF DIFFERENT, ENTER ACTUAL QUANTITY ACCEPTED BELOW QUANTITY ORDERED & ENCIRCLE

24. UNITED STATES OF AMERICA
E T Cole Jr
BY: E. T. COLE, JR. CONTRACTING/ORDERING OFFICER

25. TOTAL 11753.04
29. DIFFERENCES

26. QUANTITY IN COLUMN 20 HAS BEEN:
|_| INSPECTED |_| RECEIVED |_| ACCEPTED AND CONFORMS TO THE CONTRACT EXCEPT AS NOTED
DATE SIGNATURE OF AUTHORIZED GOVERNMENT REP.

27. SHIP.NO.
|_| PARTIAL
|_| FINAL

28. D.O. VOUCHER NO

30. INITIALS

32. PAID BY

33. AMT VERIFIED CORRECT FOR

36. I CERTIFY THIS ACCOUNT CORRECT & PROPER FOR PAYMENT
DATE SIGNATURE AND TITLE OF CERTIFYING OFFICER

31. PAYMENT
|_| COMPLETE
|_| PARTIAL
|_| FINAL

34. CHECK NUMBER

35. BILL OF LADING NO.

37. REC'D	38. REC'D BY	39. DATE REC'D	40. TOTAL CONT.	41. S.R. ACCOUNT NUMBER	42. S.R. VOUCHER No.
	436915	12-~~17~~-85 20	5		

DD1155
Consolidated

REPORT OF PROPERTY RECEIVED

ACORN SPECIALTY & SUPPLY CO

ITEM NO	SUPPLIES/SERVICES	QUANTITY	UNIT	UNIT PRICE	AMOUNT

IMPORTANT NOTICE: INQUIRIES RELATING TO THIS ORDER SHALL BE ADDRESSED TO THE ATTENTION OF: CONTRACT ADMINISTRATOR, BUYING BRANCH 1, TELEPHONE (919) 451-3011. INVOICES MUST CITE BUYING BRANCH 1 AND THE APPLICABLE PURCHASE/DELIVERY ORDER NUMBER. THE INVOICES WILL BE RETURNED IF THE BUYING BRANCH AND ORDER NUMBER ARE NOT CITED ON THE INVOICE.

0001	4520000C005959 M6700151583185	12	EA	979.42	11753.04

PRI: 14

PUMPING UNIT, CONDENSATE, HEATING, HORIZONTAL, SIMPLEX, UNIT CONSISTS OF RECEIVER WITH FLOAT SWITCH, SIGHT GAUGE GLASS WITH GAUGE COCK, SUPPORT, EXPANSION ELBOW, PIPING, PUMP, MOTOR, BASE AND FLEXIBLE COUPLING. COMPLETE PACKAGE TO BE PREPIPED AND MOUNTED ON A ONE PIECE COMMON BASE. SPECIFIC INFORMATION ON COMPONENTS AS FOLLOWS: RECEIVER TO BE CYLINDRICAL-~~16~~ 20 IN. DIA, ~~38~~ 38 IN LG, 3/16 IN THICK STEEL-GALVANIZED INSIDE AND OUTSIDE, TO HAVE BRASS FLOAT AND ENCLOSED FLOAT SWITCH ASSY; BRASS WATER LEVEL GAUGE ASSY COMPLETE W/SHUT OFF VALVE AND PROTECTOR RODS. ;TURBINE PUMP, CAST IRON, BRONZE IMPELLER, STAINLESS STEEL SHAFT, TO BE BOLTED TO BASE, 15 GPM CAPACITY, 3 IN INLET, 85 PSI DISCHARGE PRESSURE, 10,000 EDR, INTERCHANGEABLE PACKING; ELECTRIC MOTOR, 3 HP, DRIP PROOF NEMA RATED, OPEN DRIP-PROOF, STEEL SHAFT, 1750 RPM, DUAL VOLTAGE, 200-300/460V, 60HZ. 3-PHASE MOTOR TO BE BOLTED TO BASE.
MFG: AURORA PUMP, A UNIT OF GENERAL SIGNAL CORP., 800 AIRPORT RD., NORTH AURORA, IL 60542

Per Kathy of Purchasing Contracting 12-11-85

MARK FOR: MMLV65

(CONTINUED)

ACORN SPECIALTY & SUPPLY CO

ITEM NO	SUPPLIES/SERVICES	QUANTITY	UNIT	UNIT PRICE	AMOUNT

(CONT'D)

THIS CONTRACT INCORPORATES THE FOLLOWING CONTRACT CLAUSES BY REFERENCE, WITH THE SAME FORCE AND EFFECT AS IF THEY WERE GIVEN IN FULL TEXT. I. FEDERAL ACQUISITION REGULATION (48CFR CHAPT 1) CONTRACT CLAUSES & II. DOD FAR SUPPLEMENT (48CFR CHAPT 2) CONTRACT CLAUSES.

FAR 52.210-5	NEW MATERIAL	APR 1984
FAR 52.222-26	EQUAL OPPORTUNITY	APR 1984
FAR 52.222-36	AFFIRMATIVE ACTION FOR HANDICAPPED WORKERS	APR 1984
FAR 52.222-4	CONTRACT WORK HOURS AND SAFETY STANDARDS--OVERTIME COMPENSATION GENERAL	APR 1984
FAR 52.222-20	WALSH HEALY PUBLIC CONTRACTS DISABLED AND VIETNAM ERA VETERANS	APR 1984
FAR 52.219-8	UTILIZATION OF SMALL BUSINESS AND SMALL DISADVANTAGED BUSINESS CONCERNS	APR 1984

FAR 52.222-21 CERTIFICATION OF NONSEGREGATED FACILITIES APR 1984
FAR 52.222-22 PREVIOUS CONTRACTS AND COMPLIANCE REPORTS APR 1984
THE OFFEROR REPRESENTS THAT--
(A) IT ( ) HAS, ( ) HAS NOT PARTICIPATED IN A PREVIOUS CONTRACT OR SUBCONTRACT SUBJECT EITHER TO THE EQUAL OPPORTUNITY CLAUSE OF THIS SOLICITATION, THE CLAUSE ORIGINALLY CONTAINED IN SECTION 310 OF EXECUTIVE ORDER NO. 10925, OR THE CLAUSE CONTAINED IN SECTION 201 OF EXECUTIVE ORDER NO. 11114;
(B) IT ( ) HAS, ( ) HAS NOT, FILED ALL REQUIRED COMPLIANCE REPORTS; AND
(C) REPRESENTATIONS INDICATING SUBMISSION OF REQUIRED COMPLIANCE REPORTS, SIGNED BY PROPOSED SUBCONTRACTORS, WILL BE OBTAINED BEFORE SUBCONTRACT AWARDS.

FAR 52.247-34 F.O.B. DESTINATION

MOST FAVORED CUSTOMER ASSURANCE: THE CONTRACTOR AGREES THAT THE PRICES FOR THE SUPPLIES OR SERVICES FURNISHED UNDER THIS CONTRACT ARE AS LOW OR LOWER THAN THOSE CHARGED THE SUPPLIER'S MOST FAVORED CUSTOMER FOR COMPARABLE QUANTITIES UNDER SIMILAR TERMS AND CONDITIONS, IN ADDITION TO ANY DISCOUNTS FOR PROMPT PAYMENT.

IMPORTANT NOTICE: INQUIRIES RELATING TO THIS ORDER SHALL BE ADDRESSED TO THE ATTENTION OF: CONTRACT ADMINISTRATOR, BUYING BRANCH 1, TELEPHONE (919) 451-3011. INVOICES MUST CITE BUYING BRANCH 1 AND THE APPLICABLE PURCHASE/DELIVERY ORDER NUMBER. THE INVOICES WILL BE RETURNED IF THE BUYING BRANCH AND ORDER NUMBER ARE NOT CITED ON THE INVOICE.

(END PAGE)

ITEM FILE INQUIRY

STK NBR	452000C005959	SUP NOMEN	
CONTR IND		SUFFIX	01
UNIT OF ISSUE	EA	BSP	S1N
CSTMR ID	1	VARTN IN QTY	03
APO		BNSS	
REC DT	88271	CMDTY ASGN	

NOMENCLATURE: PUMP UNIT, CONDENSATE, TURBINE, 30 GAL, 15 GPM, TDH 196, LH ROTATION, 1750 RPM 3 HP, 208/230/460-3-60HZ WITH RECEIVER & FLOAT, SWITH, SIGHT GAGE, GLASS, WITH GAGE COCK, SUPPORT, EXPANSION ELBOW, PIPPING, PUMP, MOTOR, BASE & FLEXABLE

COUPLING, COMPLETE PACKAGE TO BE PRE-PIPPED AND MOUNTED ON ONE PIECE STEEL COMMON BASE. AURORA P/N 30147.

9/28/88 bl

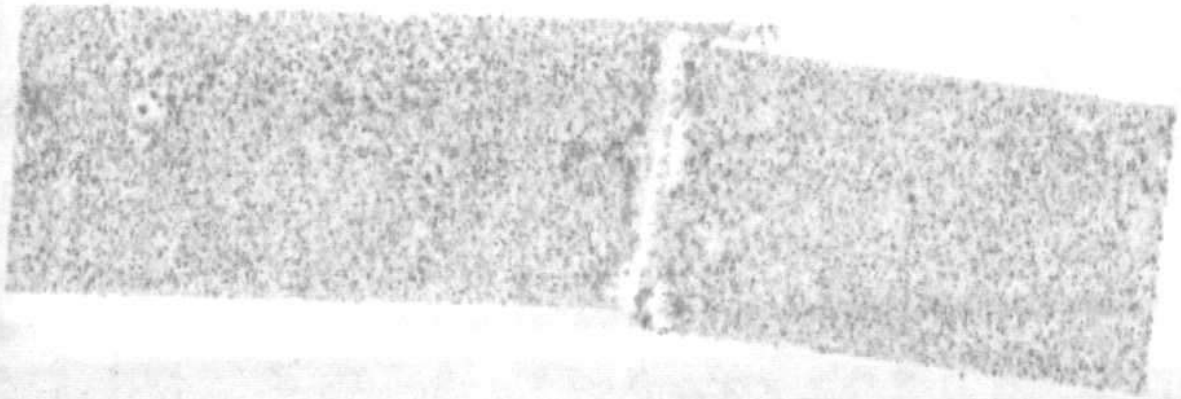

...NICAL & MAINTENANCE SUPPLY

ITEM NO	SUPPLIES/SERVICES	QUANTITY	UNIT	UNIT PRICE	AMOUNT

THIS CONTRACT INCORPORATES THE FOLLOWING CONTRACT CLAUSES BY REFERENCE, WITH THE SAME FORCE AND EFFECT AS IF THEY WERE GIVEN IN FULL TEXT. I. FEDERAL AQUISITION REGULATIONS (48CFR CHAPT 1) CONTRACT CLAUSES & II. DOD FAR SUPPLEMENT (48CFR CHAPT 2) CONTRACT CLAUSES.

FAR 52.210-5 NEW MATERIAL APR 1984
FAR 52.222-26 EQUAL OPPORTUNITY APR 1984

FAR 52.247-34 F.O.B. DESTINATION APR 1984

MOST FAVORED CUSTOMER ASSURANCE: THE CONTRACTOR AGREES THAT THE PRICES FOR THE SUPPLIES OR SERVICES FURNISHED UNDER THIS CONTRACT ARE AS LOW OR LOWER THAN THOSE CHARGED THE SUPPLIER'S MOST FAVORED CUSTOMER FOR COMPARABLE QUANTITIES UNDER SIMILAR TERMS AND CONDITIONS, IN addition TO ANY DISCOUNTS FOR PROMPT PAYMENT.

IMPORTANT NOTICE: INQUIRIES RELATING TO THIS ORDER SHALL BE ADDRESSED TO THE ATTENTION OF: CONTRACT ADMINISTRATOR, BUYING BRANCH 1, TELEPHONE (919) 451-3011. INVOICES MUST CITE BUYING BRANCH 1 AND THE APPLICABLE PURCHASE/DELIVERY ORDER NUMBER. THE INVOICES WILL BE RETURNED IF THE BUYING BRANCH AND ORDER NUMBER ARE NOT CITED ON THE INVOICE.

RESEARCHED
Tech & Research BR
CATALOGER # 101

7.98 01

0001	4510000001522	M6700182180552	15	EA	10.45	156.75

SHEIF, LAVATORY, GLASS 1/4' THK, 5'W, 18' LG, W/2 WALL MTG CHROM PLD BRACKETS & SCREWS.
P/N: 698-18 MFG: SCOVILL INC.
M/F: MMLV65

SOLICITATION NUMBER: 88TF625

PAYMENT WILL BE MADE BY: BASE DISBURSING OFFICER
**MAIL INVOICES TO ADDRESS SHOWN IN BLOCK 7 ABOVE 28542

RESEARCHED
Tech & Research BR
CATALOGER # 101

975.41 01

0002	4520000005959	M6700182180571	3	EA	655.00	1965.00

PUMP UNIT, CONDENSATE, TURBINE, 30 GAL, 15 GPM, TDH 196, LH ROT. 1750RPM, DISCH 1.25", 3 HP, 208/230/460-3-60HZ
P/N: 30I4T, DRIP PROFF
MFG: AURORA PUMP
M/F: MMLV65

SOLICITATION NUMBER: 88TF468
PAY OFFICE: SEE LINE ITEM 0001 FOR PAYING ADDRESS

(END PAGE)

N C
P/W B

.4520 00C005959
P/0 92P1217

T+R

GS AURORA PUMP
A UNIT OF GENERAL SIGNAL

Submittal Data For

- ■ Condensate Systems
- ☐ Boiler Feed Systems
- ☐ Water Seal Systems

NO. OF PRINTS	
	For Approval
3	Final
	Reproducible

SALES OFFICE: MECHANICAL EQUIPMENT CO. (GREENSBORO) **PO#:** 18-0292-123

Factory Order #: 9A2-06894 **Service:**

Job:

Engineer:

Contractor:

Sold To: FREIGHT TRAFFIC BRANCH **PO#:** M6700192P1217

Reference:

SYSTEM

Number of Systems SIX Model 211

■ Simplex ☐ Duplex ☐ Triplex ☐

PUMP

Model 114
Size 14T
GPM 15
TDH 196'
RPM 1750

Construction:
- ☐ Standard Fitted
- ■ Bronze Fitted
- ☐

Case CI
Imp. BRZ
Shaft 416SS
Sleeve
Case Ring
Imp. Ring
Ch. Ring CI
Spacer CI

Rotation:
- ☐ RH
- ■ LH

Discharge Connections:
- ■ Threaded
- ☐ Flanged
  - ☐ 125#
  - ☐ 150#
  - ☐ 250#
  - ☐ 300#

Lubrication:
- ■ Grease
- ☐ Oil

Stuffing Box:
- ■ Packing
- ☐ Lantern Ring
- ☐ Mech. Seal

MOTOR

HP: 3
Phase: 3
Hertz: 60
Volts: 208/230/460
RPM: 1750
Frame: 182T

Enclosure:
- ■ ODP
- ☐ TEFC
- ☐ X Proof

- ☐ Vertical
- ■ Horizontal
- ☐ Part Winding
- ☐ Hi Efficiency

- ■ Aurora To Furnish
- ☐ Others To Furnish
- ■ Factory Choice

Mfg:

OPTIONS

Base:
- ☐ Steel Drip Rim
- ■ Steel Form

Coupling:
Mfg: LOVEJOY
Size: L-095
- ☐ Spacer
- ■ Guard

Test:
- ☐ Certified Performance
- ☐ Wit. Certified Perform.
- ☐ Hydro
- ☐

Controls:
- ☐ Make-up Valve
- ■ Float Switch
  SQD 9037 HG NEMA 1
- ☐ Alternator

Tank:
Gallons: 30
- ☐ Cast Iron
- ☐ Black Steel
- ■ Galvanized
- ☐ A.S.M.E.

Suction Piping:
- ☐ 3-way Valve
- ☐ Gate Valve
- ☐ Brz. Isolation Valve
- ☐ Y-Strainer

Misc.:
- ☐ Thermometer
- ■ Gauge Glass
- ☐ Corrosion Inhibitor
- ☐ Steam Preheat Assy.
- ☐ Discharge Pressure Gauge

SPECIAL REQUIREMENTS

CERTIFIED PRINT: Section: 210 Page: 251 Curve Number: 11PC-10283

Special: Maintenance Sent:

By: KRIS MK Date: 3.5.92 Office: NORTH AURORA

This order will not be processed for manufacturing until approval is received. Prints are not to scale and are certified correct only for this order. All orders are subject to acceptance at Aurora Pump, North Aurora, Illinois.

40192(10-90)

SIMPLEX-STEEL TANK ON STEEL BASE

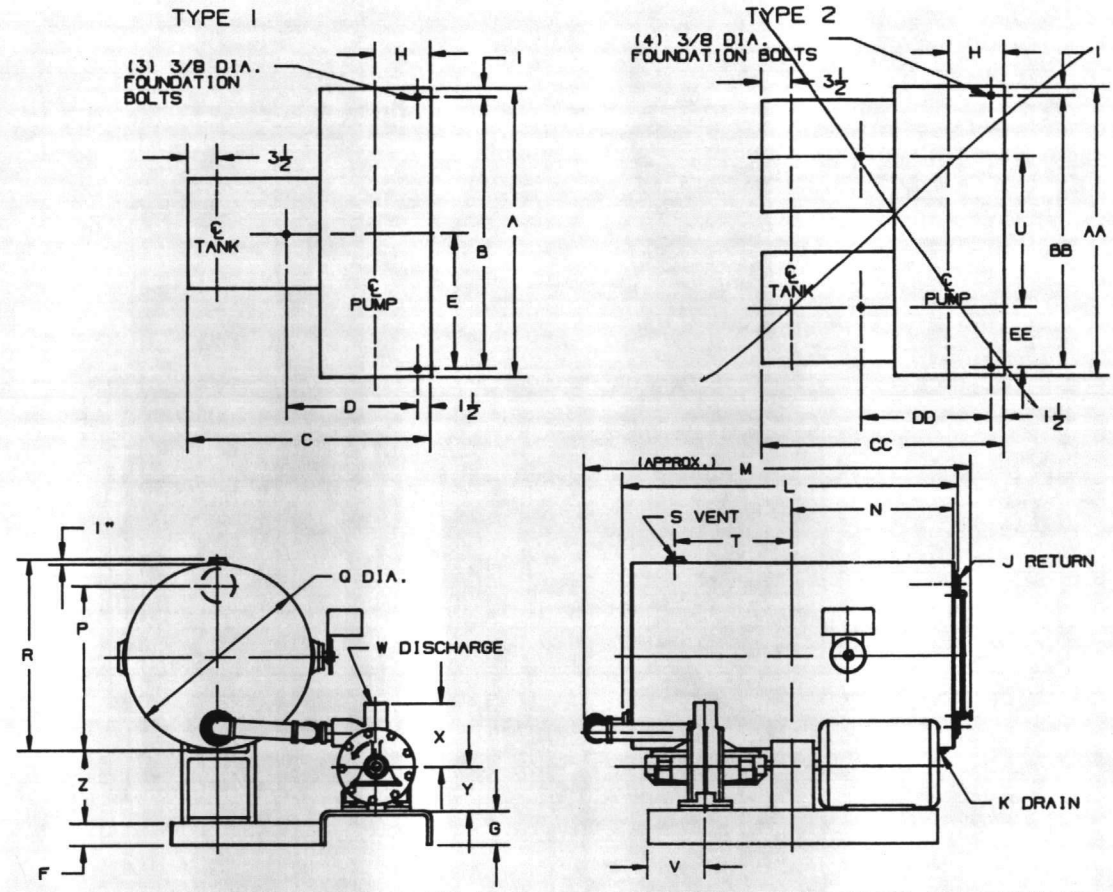

REFER TO SEC. 210 PAGE 249 FOR PEDESTAL AND BASE SELECTION

PUMP SIZE	V	W	X	Y•
A35, A4, C4, D4, E4, F4, G4, H4, I4, I4A	4-3/4	1-1/4 NPT	6-1/4	3-1/2
M4, P4, R4	4-3/4	1-1/2 NPT	5-3/8	3-1/2
~~D4T, E4T, F4T, G4T~~ I4T, ~~I4TA~~	6-1/16	1-1/4 NPT	5-3/8	3-1/2
H5, I5	4-3/4	1-1/4 NPT	7-1/2	4-3/4
K5, L5, M5, N5, P5	4-3/4	1-1/2 NPT	7-1/2	4-3/4
F6T	8-1/2	2 250• FLG.	7-1/2	6-1/4
G6, H6, J6, K6	8-1/2	2-1/2 125•FLG.	8	6-1/4
G6T, H6T, J6T, K6T	8-1/2	2-1/2 250•FLG.	7-1/2	6-1/4

TYPE 1 BASE 15, 30 & 60 GAL. TANK								
BASE SIZE	A	B	C	D	E	F	G	H
1	24	22	20	10	11	2	2-5/8	5
2	27	25	24	12	12-1/2	2	3	6
3	30	28	24	12	14	2	3	6
4	34	32	29	13	16	2-5/8	4	6-1/2
5	44	42	36	15	21	3	3-3/8	7-1/2
6	48	46	39	18	23	3	4	9

NEMA FRAME	Y•
56-143T-145T	3-1/2
182T-184T	4-1/2
213T-215T	5-1/4
254T-256T	6-1/4

TANK SIZE GALLONS	BASE TYPE	J	K	L	M	N	P	Q	R	S	T
15	1	2	3/4	30	40	13	12-1/2	14	14-1/2	2	10-1/8
30	1	3	3/4	38	50	17 1/2	13-1/4	16	16-1/2	2	13-5/8
60	1	3	3/4	38	50	18	19-1/4	22	22-1/2	2	13-1/8
100	2	3	1-1/4	54	64	25-1/2	21-1/4	24	24-1/2	3	17-5/8
200	2	4	1-1/4	68	78	32-1/2	26-3/4	30	30-1/2	3	25

PEDESTAL	Z
B	8-1/2
C	11

TYPE 2 BASE 100 & 200 GAL. TANK									
BASE SIZE	AA	BB	CC	DD	EE	F	G	H	U
1	25	23	28	10	2-1/2	2	2-5/8	5	18
2	27	25	30	12	3-1/2	2	3	6	18
3	30	28	30	12	5	2	3	6	18
4	34	32	33	13	7	2-5/8	4	6-1/2	18
5	38	36	30	12	5	2	2-7/8	6	31
6	44	42	36	15	8	3	3-3/8	7-1/2	26
7	48	46	39	18	10	3	4	9	26

NOTES:
1. ALL DIMENSIONS IN INCHES.
2. DIMENSIONS MAY VARY ±1/4".
3. NOT FOR CONSTRUCTION PURPOSES UNLESS CERTIFIED.
4. CONDUIT BOX IS LOCATED ON THE OPPOSITE SIDE OF THE MOTOR SHOWN. CAPACITOR, WHEN FURNISHED, NORMALLY APPEARS ON TOP OF MOTOR. DIMENSIONS ARE NOT SPECIFIED AS THEY MAY VARY WITH EACH MOTOR MANUFACTURER.
5. COUPLING GAP MAY VARY 1/8" TO 1".
6. FLANGES IN ACCORDANCE WITH 125• OR 250• AMERICAN STD.
7. •ALWAYS USE MAX. "Y" DIMENSION GIVEN IN PUMP OR MOTOR LIST.

GS AURORA PUMP
A UNIT OF GENERAL SIGNAL
800 AIRPORT ROAD • NORTH AURORA, ILLINOIS 60542

SIZE 14T

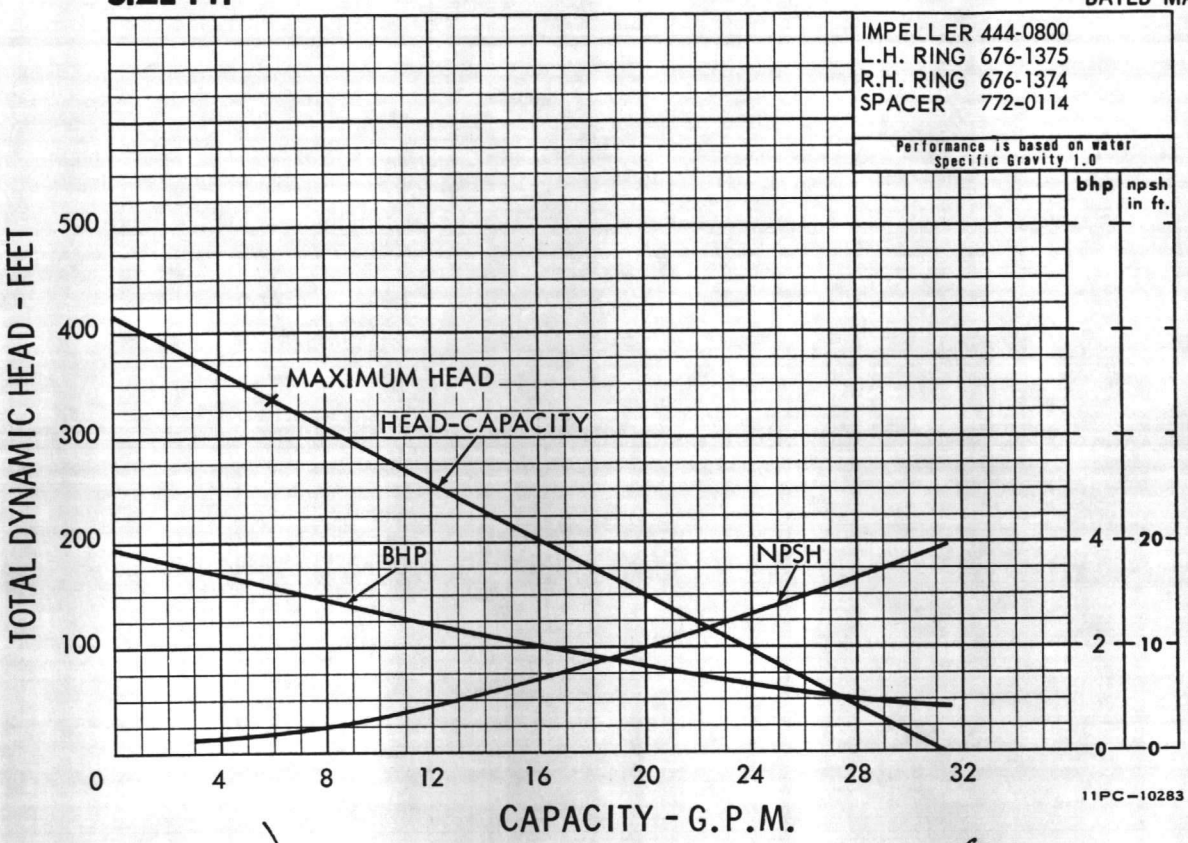

1750 R.P.M.

SIZE 14TA

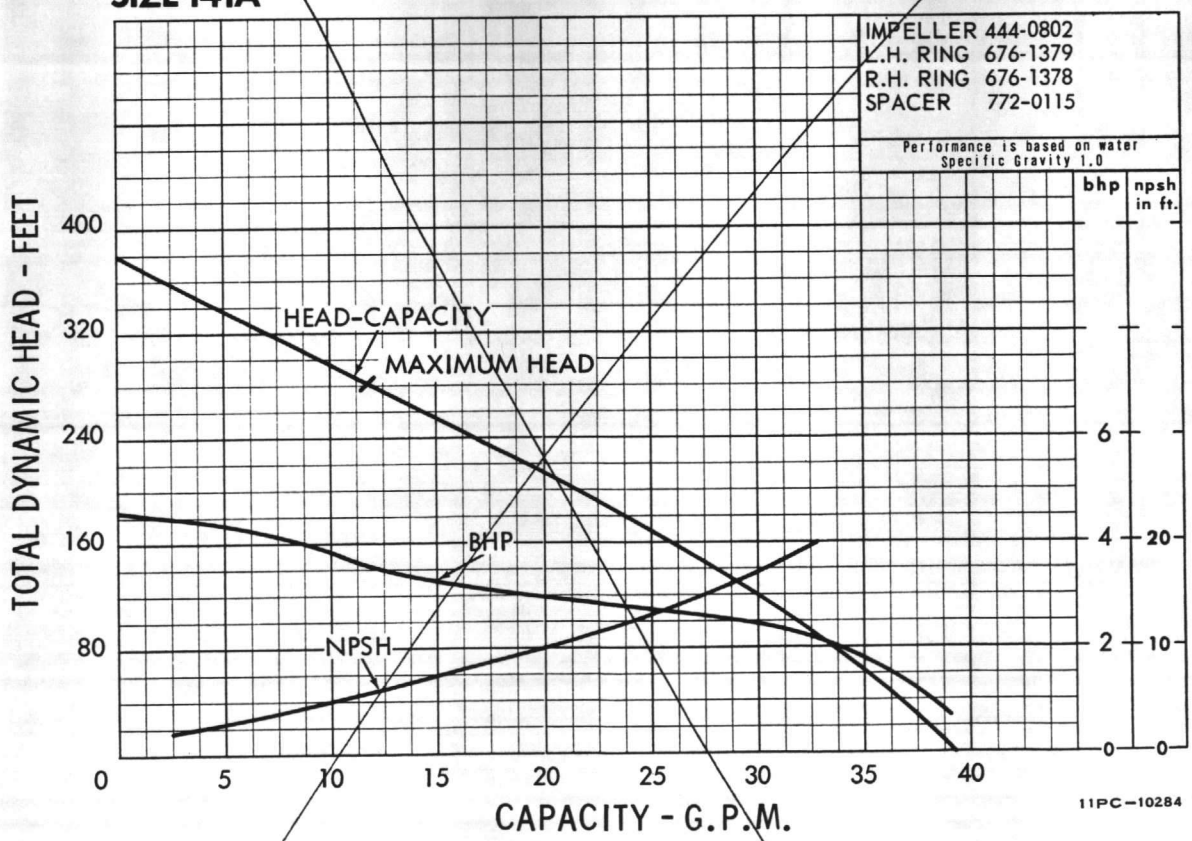

1750 R.P.M.

AURORA PUMPS
AURORA PUMP
A UNIT OF GENERAL SIGNAL
800 AIRPORT ROAD • NORTH AURORA, ILLINOIS • 60542
(708-859-7000

Elastomeric Jaw Type

Dimensional Data
L Type

The Lovejoy elastomeric jaw type flexible couplings do not require lubrication and are the industry standard. They offer ease of assembly or disassembly; permit visual inspection of wear members (cushion types are easily inspected and can be removed quickly without disturbing the driving or driven units), and there is no wear on the metal jaws since the load is transmitted through the cushion (spider). These Lovejoy couplings are designed to perform even if the elastomeric member should fail!

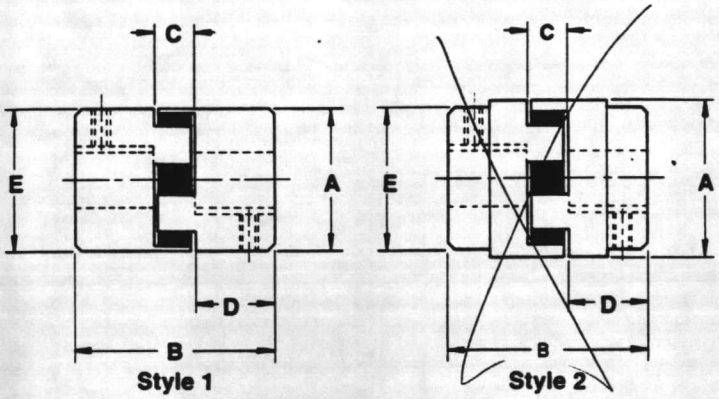

Type L

Technical Selection Data: Misalignment at 1750 RPM

Model	Torque Range (In.-Lb.)	Misalignment Capability: Max. Angular Offset Degrees	Misalignment Capability: Max. Parallel Offset Inches	Standard Materials: Body	Standard Materials: Flexible Member
L	Up to 4,600	1°	.015	Sintered Iron and Cast Iron	Sox

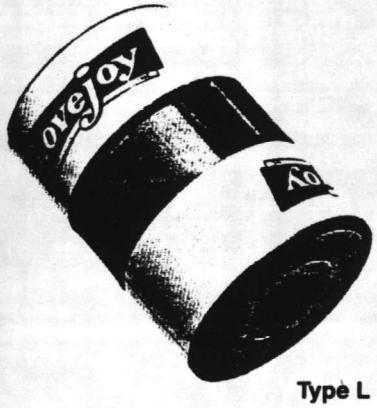

Type L

Note: Maximum recommended angular and parallel misalignment is dependent on speed and nominal torque. For applications with greather misalignment requirements we suggest you contact Lovejoy Engineering for recommendations. See page 8 for optional materials data.

L Type Technical Selection Chart

Coupling No.	Rated Torque In-Lbs Rubber	HP/100 RPM Rubber	Horsepower Capacity @ Varying Speed (RPM) with Rubber Spider 300	1200	1800	3600	Max. Speed Max. Bore	Max. x 1000 RPM	Coupling Number
L-035	3.5	.0056	.016	.066	.10	.20	3/8	31.0	L-035
L-050	26.3	.041	.125	.50	.75	1.5	5/8	18.0	L-050
L-070	43.2	.07	.21	.84	1.2	2.4	3/4	14.0	L-070
L-075	90	.14	.42	1.68	2.5	5.0	7/8	11.0	L-075
~~L-090~~	~~144~~	~~.23~~	~~.66~~	~~2.70~~	~~4.0~~	~~8.0~~	~~1~~	~~9.0~~	~~L-090~~
L-095	194	.30	.9	3.6	5.4	10.8	1 1/8	9.0	L-095
~~L-099~~	~~318~~	~~.50~~	~~1.5~~	~~6.0~~	~~9.0~~	~~18~~	~~1 3/16~~	~~7.0~~	~~L-099~~
L-100	417	.66	2.0	8.0	11.9	23.8	1 3/8	7.0	L-100
L-110	792	1.25	3.7	15	22	44	1 5/8	5.0	L-110
L-150	1240	2.0	6.0	24	36	72	1 7/8	5.0	L-150
L-190	1728	2.7	8	32	48	96	2 1/8	5.0	L-190
L-225	2340	3.7	11	44	67	134	2 5/8	4.2	L-225
L-276	4716	7.5	22.5	90	135	270	2 7/8	4.2	L-276

NOTE: All ratings in the Technical Selection Charts are based on a service factor of 1.0. If a higher service factor is needed, please refer to Page 20, Step 2 of Coupling section, or see chart on page 128 for typical service factors.

L Type Flexible Couplings Dimensional Data

Coupling Number	Style No.	Bore Min.	Bore Max.	Dimensions in Inches: Outside Diameter A	Overall Length B	Distance Between Flanges C	Length Thru Bore D	Hub Diameter E	Approx. Wt. Pounds Solid	Max. Bore	Moment of Inertia WR² Lb-in² (Solid)
L-035	1	1/8	3/8	5/8	13/16	9/32	17/64	5/8	.1	.1	.003
L-050	1	1/4	5/8	1 5/64	1 23/32	15/32	5/8	1 5/64	.3	.2	.054
L-070	1	1/4	3/4	1 23/64	2	1/2	3/4	1 23/64	.6	.4	.115
L-075	1	1/4	7/8	1 3/4	2 1/8	1/2	13/16	1 3/4	1.0	.8	.388
~~L-090~~	~~1~~	~~1/4~~	~~1~~	~~2 7/64~~	~~2 1/8~~	~~1/2~~	~~13/16~~	~~2 7/64~~	~~1.5~~	~~1.2~~	~~.772~~
L-095	1	7/16	1 1/8	2 7/64	2 1/2	1/2	1	2 7/64	1.8	1.3	.890
~~L-099~~	~~1~~	~~7/16~~	~~1 3/16~~	~~2 17/32~~	~~2 7/8~~	~~3/4~~	~~1 1/16~~	~~2 17/32~~	~~2.5~~	~~2.0~~	~~2.048~~
L-100	1	7/16	1 3/8	2 17/32	3 1/2	3/4	1 3/8	2 17/32	3.5	2.5	2.783
L-110	1	5/8	1 5/8	3 5/16	4 1/4	7/8	1 11/16	3 5/16	6.6	5.0	8.993
L-150	1	5/8	1 7/8	3 3/4	4 1/2	1	1 3/4	3 3/4	9.1	7.0	11.477
L-190	2	3/4	2 1/8	4 1/2	4 7/8	1	1 15/16	4	17.0	13.0	39.256
L-225	2	3/4	2 5/8	5	5 3/8	1	2 3/16	4 1/4	23.0	18.0	65.003
L-276	2	7/8	2 7/8	6 3/16	7 7/8	1 5/8	3 1/8	5	47.0	36.0	188.000

816AS
SERVICE
BULLETIN

Class 9037 Type HG Series C
FLOAT SWITCH

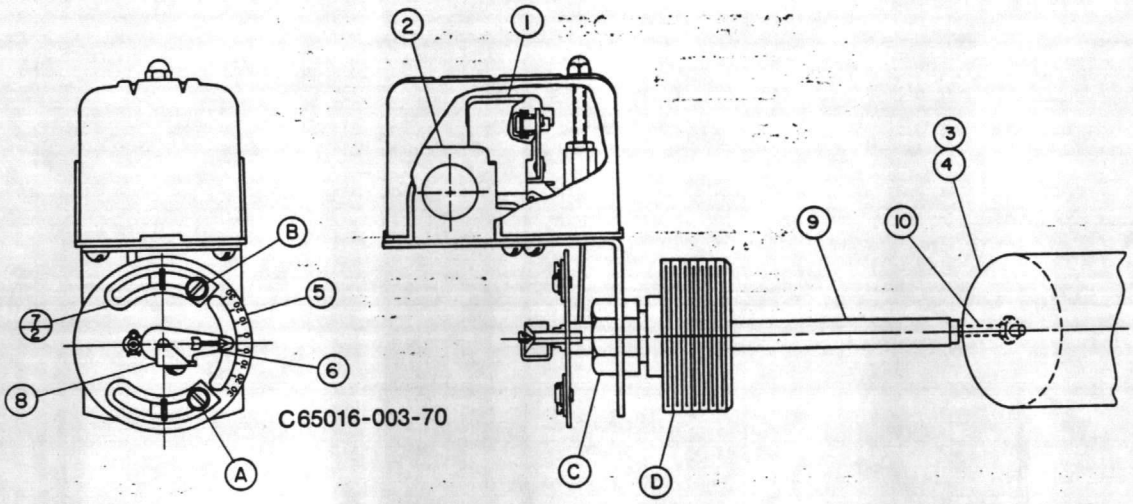

CAUTION: Switches are shipped with a bracket attached to the mounting plate. This bracket prevents the float and rod from moving in the tank during shipment. When installing the system, this clearly marked shipping bracket must be removed and discarded.

APPLICATIONS: For automatically controlling the liquid level in a closed tank by float movement.

MOUNTING: The Type HG Screw-in Tank Float Switches are mounted directly to the tank by means of the 2½" I.P.S. threaded fiting (D). Before screwing this fitting into the tank, loosen Nut (C) so that the fitting (D) is free to rotate in the switch bracket. Tighten the fitting (D) so that there will be no leak past the threads. Then revolve the switch case until it is horizontal and tighten Nut (C).

ENCLOSURE RATING: NEMA 1 ENCLOSURES ARE INTENDED FOR INDOOR USE PRIMARILY TO PROVIDE A DEGREE OF PROTECTION AGAINST CONTACT WITH THE ENCLOSED EQUIPMENT IN LOCATIONS WHERE UNUSUAL SERVICE CONDITIONS DO NOT EXIST.

WARNING: TO AVOID SHOCK HAZARD, DISCONNECT ALL POWER BEFORE INSTALLING OR SERVICING DEVICE.

ADJUSTMENTS: Switches are shipped from the factory set for a specified float travel. Reasonable adjustment of float travel can be made in the field by moving adjusting strips (7) which are held in place by Screws (A) and (B). Loosening Screw (B) and moving upper adjustment strip (7) will affect the upper limit of float travel only. Loosening Screw (A) and moving lower adjusting strip (7) will affect the lower limit of float travel.

REPLACEMENT PARTS LIST

Item Number	Description	Number Req'd.	Part Number
1	Set of Movable and Stationary Contacts	1	9998 PC-242
2	Switch Mechanism*	1	65079-502-51
3	Float (304 SS)	1	9049 HF3
4	Float (316 SS)	1	9049 HF4
5	Adjusting Plate Assembly	1	2810-D7-G1
6	Operating Lever	1	2810-C4-X2
7	Adjusting Strip	2	2810-X8
8	Clamp	1	2810-D4-X1
9	45° — Sealing Tube Assy.	1	2810-C3-G1
9	90° Offset 3" Sealing Tube Assy.	1	2810-C3-G4
9	90° Offset 4¼" Sealing Tube Assy.	1	2810-C3-G5
9	90° Offset 5" Sealing Tube Assy.	1	2810-C3-G3
9	90° Offset 7" Sealing Tube Assy.	1	2810-C3-G2
10	45° — Float Rod**	1	2810-L38-X1
10	90° Offset 3" Float Rod**	1	2810-F14-X3
10	90° Offset 4¼" Float Rod**	1	2810-F14-X4
10	90° Offset 5" Float Rod**	1	2810-F14-X2
10	90° Offset 7" Float Rod**	1	2810-F14-X1
—	Seal and Installation Kit	1	9998 PC-282

*Orders for mechanisms must show class and type so nameplate on replacement can be correctly stamped.
**Must order 9998 PC-282 when ordering Replacement Float Rods.

Replaces Inst.
Card L-4164B
Dated September, 1981

MADE IN USA

816AS
SERVICE
BULLETIN

FLOAT & LINK POSITIONS

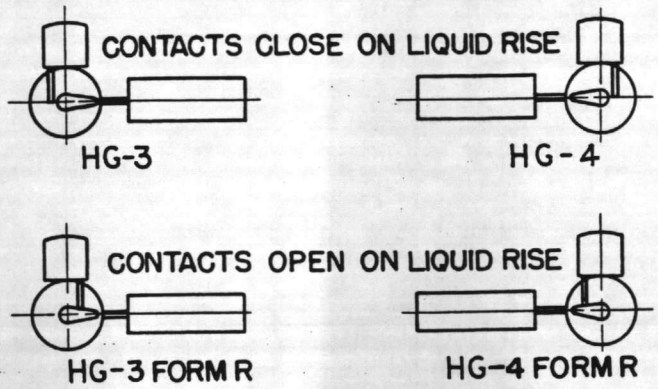

2810-D22

PRESSURE: In the use of any of these Float Switches, the pressure limit within the closed tank must not exceed 50 lbs.

MOTOR PROTECTION: A float switch of this type does not afford motor protection, however it is quite frequently used as a pilot to operate a starter providing these desirable features. The Square D Co. manufactures a complete line of motor protective switches, information on which will be sent upon request.

REVERSE ACTION: To change, relocate operating link as shown in table 2810-D22 above to the opposite slot in base plate and corresponding hole in adjusting plate (Item 5).

TYPICAL WIRING DIAGRAMS

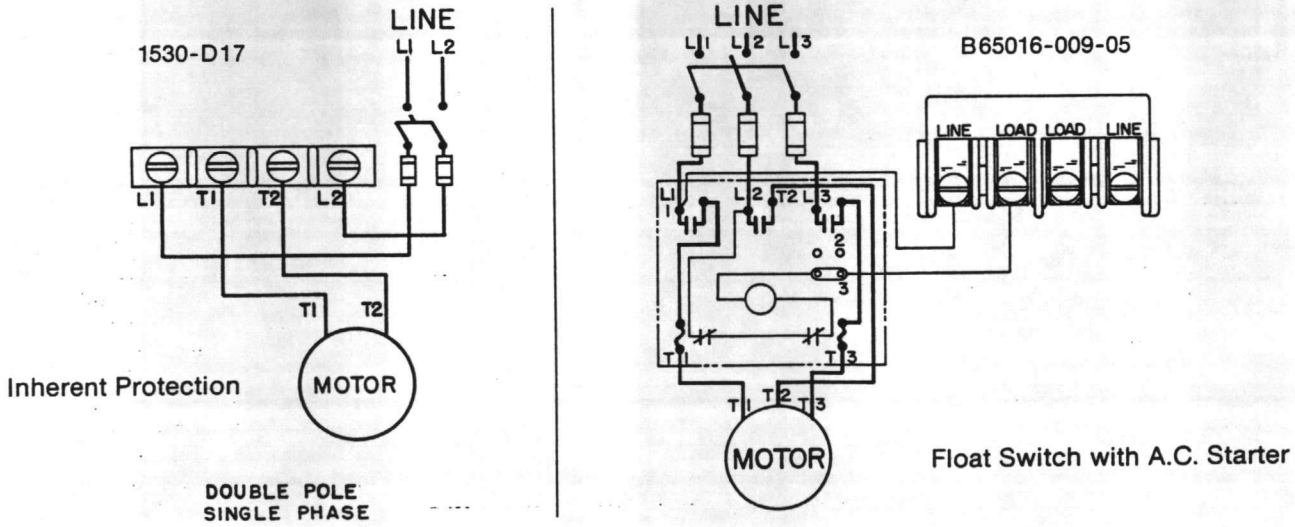

ELECTRICAL RATINGS (HORSEPOWER)

Voltage	Single Phase AC	Polyphase AC	DC
115	2HP	3HP	½HP
230	3HP	5HP	½HP
460/575		1HP	
32			¼HP

Control Circuit Rating: A600

AURORA® PUMPS

INSTRUCTION MANUAL
REPAIR
MODEL 211-212 (CONDENSATE)

6

SERVICE

Your Aurora Model 211 or 212 unit requires no maintenance other than periodic inspection, lubrication and occasional cleaning. The intent of inspection is to prevent breakdown, thus obtaining optimum service life. For lubrication, repair or parts replacement for your Aurora pump(s), refer to the applicable instruction manual. Copies are available through your local Aurora Pump Sales Office. The motor may also require lubrication or repair, in which case, the motor manufacturer's recommendations should be followed.

REPAIR

Your Aurora unit may be disassembled using figures 1 thru 3 along with the text. Although complete disassembly is covered, it will seldom be necessary to completely disassemble your Aurora unit.

Inspect parts at disassembly to determine if they should be reused. Take note of the parts of your pump(s) that must be replaced at disassembly according to the instruction manual mentioned above. Piping gaskets should be replaced if damaged during disassembly. The glass for the water level gauge must be replaced if cracked or broken. In general, it is economical to return to the manufacturer for repair only the motor, mechanical alternator or float switch, and the electric solenoid make-up valve.

DISASSEMBLY

Disassemble only what is needed to make repairs or accomplish inspection. Should complete disassembly be required, refer to figure 2 and proceed as follows:

1. Disconnect electrical lines from motor(s) (14). Identify leads with tags for ease of reassembly.

2. To drain receiver (17), close return valve and discharge gate valve, and pull plug on bottom of receiver.

3. Disconnect discharge piping from pump casing, if necessary.

4. To remove suction piping (1):

   a. Unscrew nuts of compression type elbow (2) to remove the two pieces of piping (1).

   b. Remove street elbow (3) from pump suction.

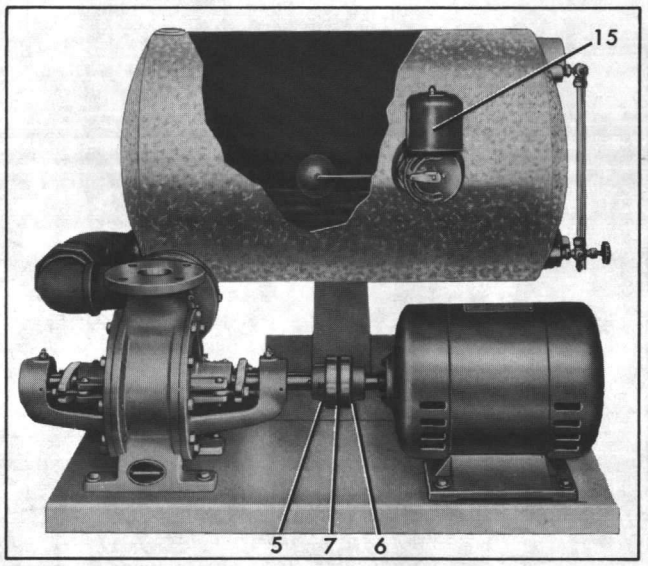

Figure 1. Model 211 (Simplex) Condensate Unit

NOTE

If pump suction is flanged, companion flange, gasket, nuts and bolts must be removed to completely disassemble piping.

   c. Then unthread street elbow (4) from receiver.

5. Loosen flexible coupling halves (5 and 6) by unthreading their setscrews, then slide halves back on pump shaft and free insert (7). (See figure 1.)

6. Remove bolts (8) and washers (9) to lift or hoist pump (10) from baseplate (11).

7. Unthread bolts (12) and washers (13) to free motor (14) from baseplate (11) only if motor is to be repaired.

8. Remove float switch (15, figure 1) or alternator (16) by unthreading it from receiver (17). Plug can be removed, if necessary, from pipe tap on opposite side.

9. To remove liquid level gauge:

   a. Remove two protector rods (18).

NOTE

Close valve (22) before removing glass tube if receiver has not been drained.

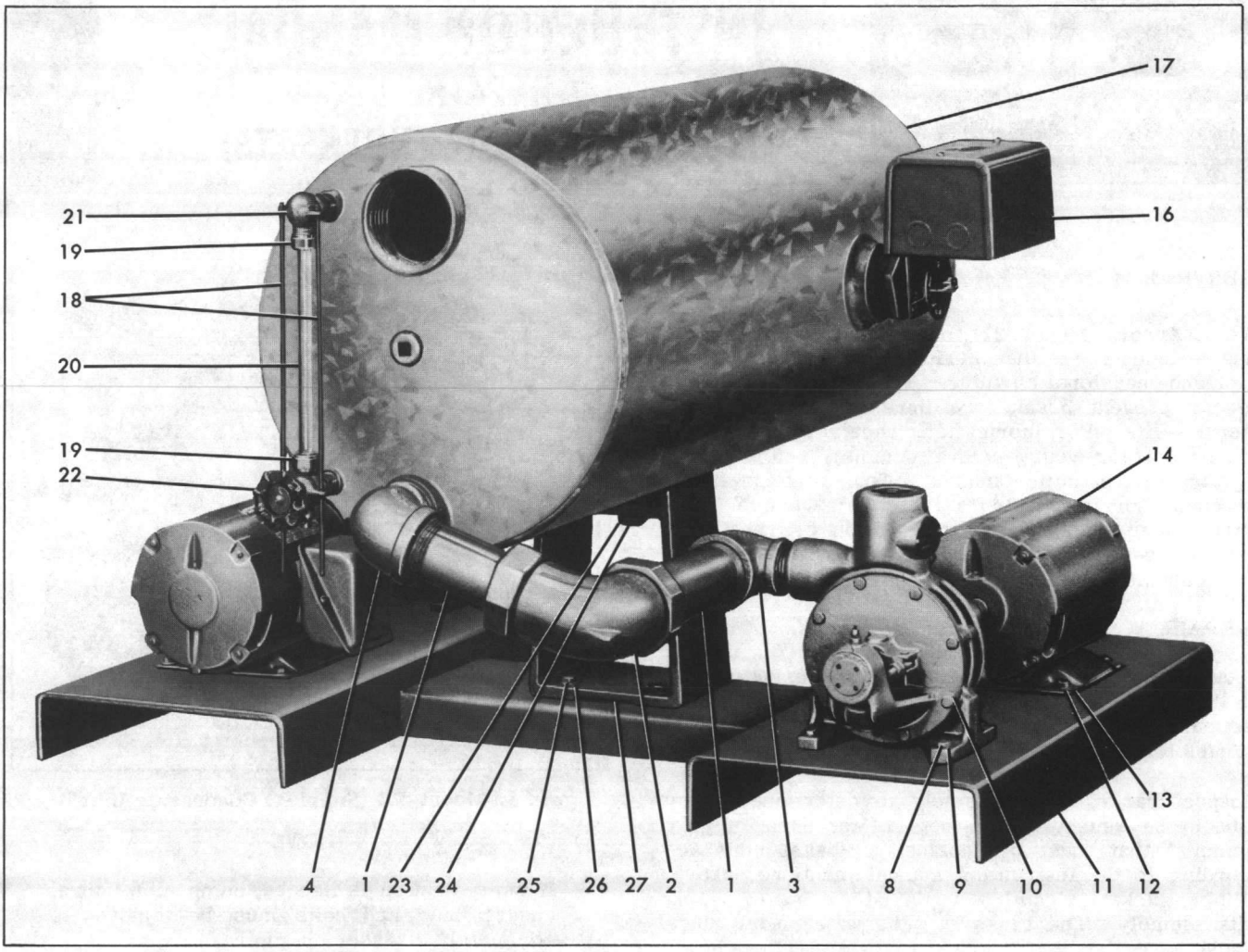

Figure 2. Model 212 (Duplex) Condensate Unit

Model 211-212 List of Parts
(Refer to figures 1 and 2)

1. Pipe
2. Elbow, Compression
3. Elbow, Street
4. Elbow, Street
*5. Coupling Half
*6. Coupling Half
*7. Insert, Coupling
8. Bolt
9. Washer
10. Pump
11. Baseplate
12. Bolt
13. Washer
14. Motor
*15. Switch, Float (Model 211)
16. Alternator, Mech.
17. Receiver
18. Rods, Protector
19. Locknut
20. Rod, gauge glass
21. Fitting, Valve
22. Fitting, Valve
23. Nut
24. Stud
25. Nut
26. Washer
27. Pedestal

* Items Illustrated in Figure 1

NOTE

WHEN ORDERING SPARE PARTS ALWAYS INCLUDE THE UNIT TYPE, SIZE, SERIAL NUMBER, AND THE PIECE NUMBER FROM THE EXPLODED VIEW IN THIS MANUAL.

ORDER ALL PARTS FROM YOUR LOCAL AUTHORIZED DISTRIBUTOR, FACTORY BRANCH SALES OFFICE OR THE FACTORY AT AURORA, ILLINOIS.

b. Unscrew locknuts (19) with rubber and brass washers inside and free glass tube (20).

c. Unthread valve gauge fittings (21 and 22) from receiver (17).

NOTE

For thermometer option, after removing valve gauge fittings (21 and 22), tee with plug and nipple are removed from upper pipe tap. On the lower pipe tap, tee with nipple, coupling and thermometer, and nipple connecting tee with receiver can be removed. Refer to option, figure 3.

10. Unscrew nut(s) (23) from stud(s) (24) if receiver (17) is to be removed from pedestal(s) (27).

11. Remove nuts (25) and washers (26) to free pedestal(s) (27) from baseplate (11).

REASSEMBLY

Clean and inspect all parts thoroughly prior to reassembly. Replace worn or damaged parts. Reassembly operations cover the entire unit; if disassembly was not complete, use for reference only those steps which apply to your particular repair program. If the pump and motor were removed from the baseplate, consult the installation section of this manual before operating again. Reassemble the unit as follows: (Refer to figure 1).

1. Bolt pedestal(s) (27) to baseplate (11) with nuts (25) and washers (26).

2. Attach receiver (17) to pedestal(s) (27) by fitting welded stud(s) (24) on receiver through hole in top of pedestal(s) and threading on nut(s) (23).

3. Thread float switch (15) or alternator (16) if used into one of two pipe taps provided on side of

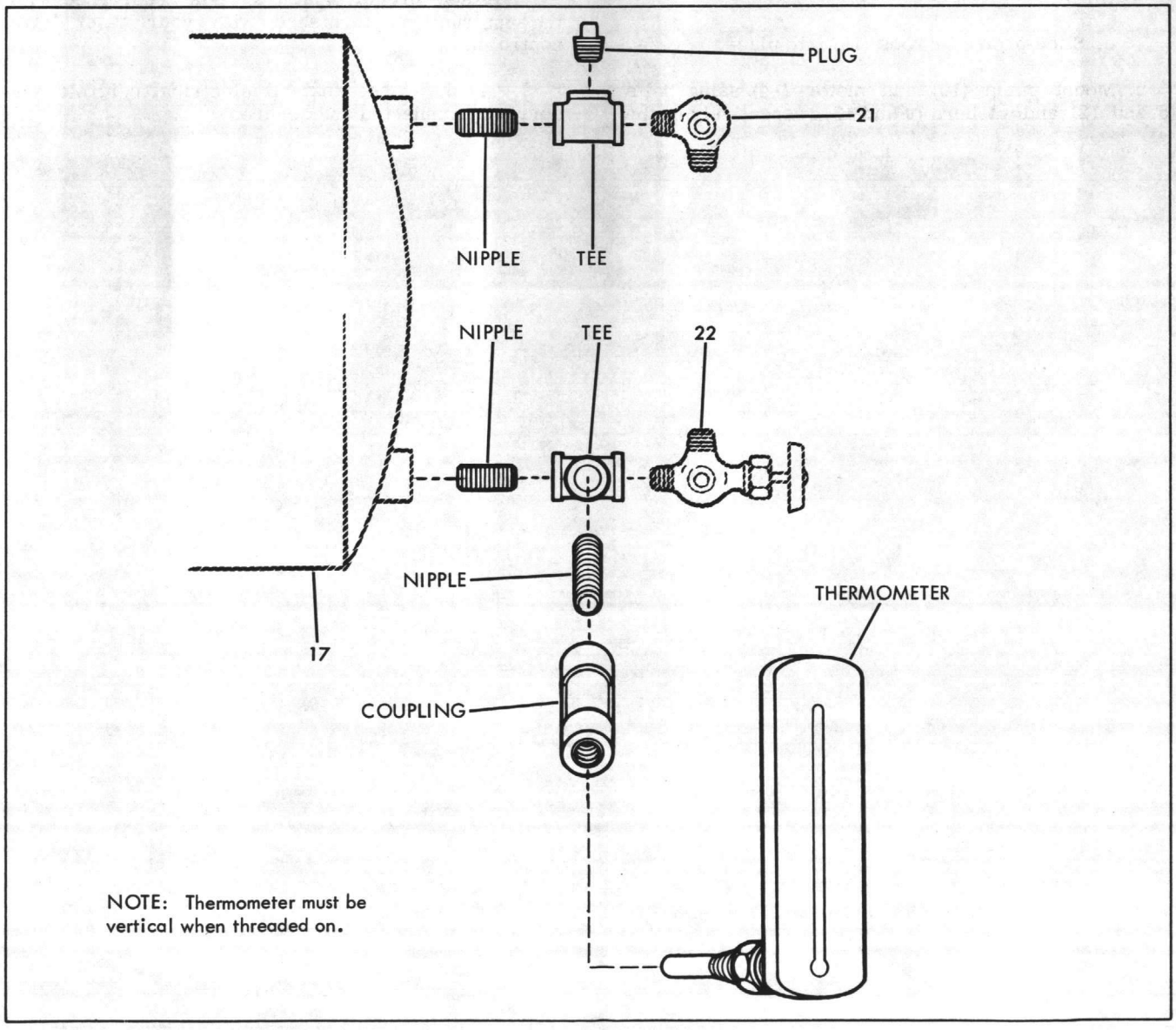

Figure 3. Thermometer Option

receiver (17). Make sure that switch is in precise vertical position when tightened. Screw plug into pipe tap on opposite side of receiver.

4. To assemble water level gauge:

a. Thread on upper (21) and lower (22) water gauge fittings to pipe taps on end of receiver. Make sure valve fitting (22) is in the lower pipe tap and that they are both vertical when tightened.

b. Place glass tube (20), with one brass and one rubber washer inside each locknut (19) on either end, into position and tighten locknuts (19), securely to gauge fittings (21 and 22).

NOTE

If thermometer option is used, refer to figure 3 for location and description of additional fittings.

c. Slide protector rods (18) into place.

5. Mount pump (10) and motor (14) using bolts (8 and 12) and washers (9 and 13) respectively to the baseplate (11), taking care to align and space coupling halves (5 and 6) with their pins and insert (7) according to the installation manual.

6. To connect suction piping from pump (10) to receiver (17):

a. Thread street elbow (3) to pump suction (refer to note under 4B in disassembly) and attach street elbow (4) to lower pipe tap on end of receiver (17).

b. Thread one length of pipe (1) to each street elbow.

c. Use compression type elbow (2) to connect two unthreaded pipe ends and secure by tightening locknuts on elbow.

7. Connect discharge piping.

8. Adjust proper float travel in accordance with the instructions furnished with your water level control unit.

9. Check to see that all electrical controls are correctly connected and secure.

A UNIT OF GENERAL SIGNAL

AURORA PUMP

INSTRUCTION MANUAL

REPAIR

MODEL 114-115-116 SINGLE STAGE
MODEL 114-115-116 TWO STAGE

6

NOTE

This repair manual is applicable to pump Models 114-115-116 single and two stage. All photos and exploded views illustrate two stage model.

SERVICE

Your Aurora pump requires no maintenance other than periodic inspection and occasional cleaning. The intent of inspection is to prevent breakdown, thus obtaining optimum service life.

LUBRICATION OF BEARINGS

Regreasable bearings will require periodic lubrication and can be accomplished by using the zerk or lubrication fittings in the cartridge cap and power frame. Lubricate the bearings at regular intervals using a grease of high quality. Lithium, lithium soda or calcium base grease is recommended as lubricants for pumps operating in both wet and dry locations. Mixing of different brands of grease should be avoided due to possible chemical reactions between the brands which could damage the bearings. Accordingly, avoid grease of vegetable or animal base which can develop acids, as well as grease containing rosin, graphite, talc and other impurities. Under no circumstances should grease be reused.

Over lubrication should be avoided as it may result in overheating and possible bearing failure. Under normal application, adequate lubrication is assured if the amount of grease is maintained at 1/3 to 1/2 the capacity of the bearing and adjacent space surrounding it.

In dry locations, each bearing will need lubrication at least every 4,000 hours of running time or every 6 to 12 months, whichever is more frequent. In wet locations the bearings should be lubricated at least after every 2,000 hours of running time or every 4 to 6 months, whichever is more frequent. A unit is considered to be installed in a wet location if the pump and motor are exposed to dripping water, to the weather, or to heavy condensation such as is found in unheated and poorly ventilated underground locations.

At times it may be necessary to clean the bearings due to accumulated dirt or deteriorated lubricants. This can be accomplished by flushing the bearing with a light oil heated to 180 to 200°F. while rotating it on a spindle. Wipe the bearing housing with a clean rag soaked in a cleaning solvent, and flush all surfaces.

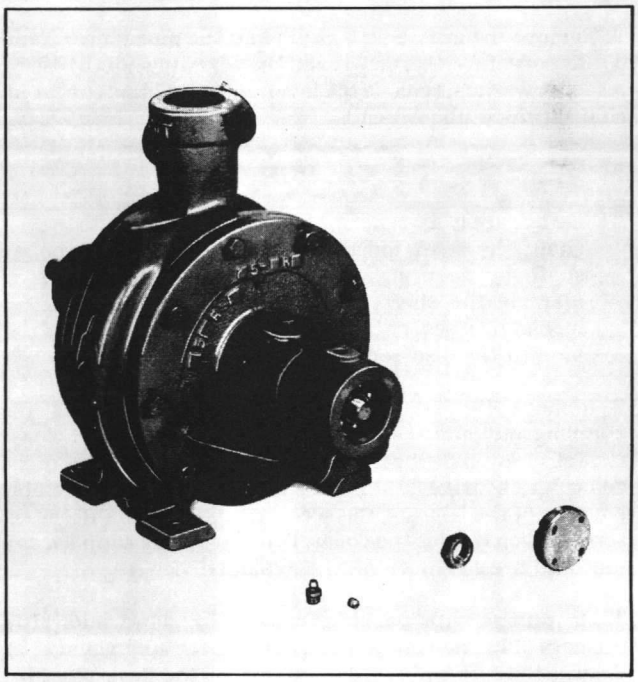

A. Outboard end of two stage turbine pump with mechanical seal. Outer adjusting nut, jam nut, set screw and grease fitting shown in foreground.

Dry bearing thoroughly before relubricating. Compressed air can be used to speed drying, but care should be taken not to let bearings rotate while being dried.

CAUTION

Use normal fire caution procedures when using any petroleum cleaner.

The motor which drives your Aurora pump may or may not require lubrication. Consult the manufacturer's recommendations for proper maintenance instructions.

REPAIRS

The pump may be disassembled using the illustrations and text provided. Although complete disassembly is covered, it will seldom be necessary to completely disassemble your Aurora pump.

The illustrations accompanying the disassembly instructions show the pump at various stages of disassembly. The illustrations are intended to aid in the correct identification of the parts mentioned in the text.

Inspect removed parts at disassembly to determine their reusability. Cracked castings should never be reused. All packing and gaskets should be replaced with new ones at reassembly simply as a matter of economy; they are much less expensive to replace routinely than to replace as the need occurs. In general it is economical to return to the manufacturer for repair only the motor and motor controller.

DISASSEMBLY OF THE PUMP. Disassemble only what is needed to make repairs or accomplish inspection. See figures 2 & 3 for single stage pumps. See figures 4 & 5 for two stage pumps.

1. Remove the grease fittings (1) and the pipe plugs (2 and 3). Remove the set screw (4) and the adjusting nut (5). Using a socket wrench, remove the jam nut (6), holding the pump shaft at the outboard end.

CAUTION

Do not apply a wrench or holding tool directly to the shaft; the shaft must not be scratched. Hold the shaft by securing the coupling. Scratching or marring the shaft may result in damage to the mechanical seal or bearings when they are removed later in the disassembly (see Figure 1 following).

2. Remove the adjusting nut (7), after removing the coupling and pump coupling key (8) from the shaft. Release the set screw in the bearing assembly lock collar and slip the collar and bearing (9) off the shaft. (The bearing assembly consists of the bearing, the eccentric lock collar and the set screw which retains the collar. These items are supplied as a unit and are so shown on the exploded view.)

3. On pumps with packing remove the gland nuts (10), washers (11) and clamps (12). Remove the split gland (13). Release the cotter pins (14), and remove the clevis pins (15) and swing bolts (16).

4. Remove the cover capscrews (17). Remove the covers (18 and 19 or 20 and 21) by sliding back off the shaft. If the cover sticks, tap lightly around flanged surface or insert a flat edge tool (a screwdriver or a chisel) between the cover and casing and pry away gently.

CAUTION

Removing the covers should be done cautiously. Rough handling could damage either the shaft, mechanical seal, cover gasket or the cover itself and cause needless expense.

When the covers are slid off the shaft, the slinger (22) will be released and can be removed.

5. If the pump assembly is equipped with a mechanical seal (24) the seal components should now be removed. (See Figures 3 or 5).

a. Remove the parts remaining on the shaft. These will be the face washer, flexible bellows, retainer, drive ring and spring.

b. If necessary, remove the flexible cup and the stationary seat which will have remained in the cover when it was withdrawn.

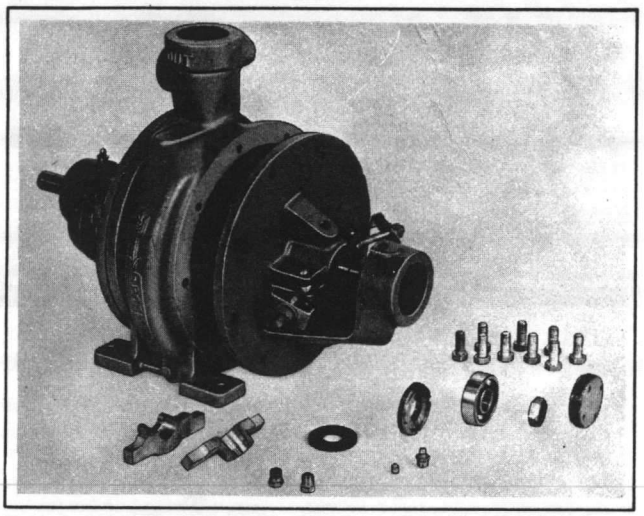

B. Outboard end, two stage pump with packing. Cover is shown loosened for removal. The bearing, the inner adjusting nut and the slinger are shown as removed.

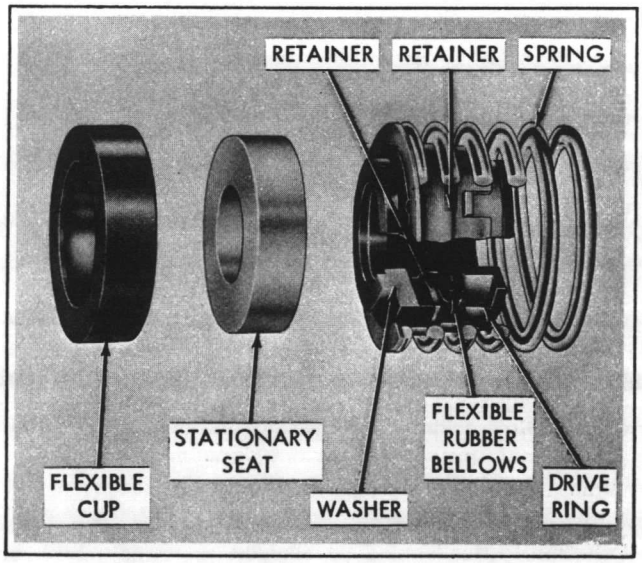

Figure 1. Mechanical Seal

c. Release the set screw (25) and slip the drive collars (26) off the shaft.

NOTE

Before removing this part, scribe a small mark on the shaft just behind the collars. This will aid in correctly positioning them during reassembly.

6. Remove the cover gaskets (23). On standard assemblies remove the packings (27) and lantern rings (optional) (28) from the covers.

7. Remove the bearing (29) and adjusting nut (30) from the outboard cover. Remove the adjusting nut (31) from the inboard cover and the cover lock pins (32).

8. Remove the outboard channel ring (34). To make removal easier, tap lightly around the casing and against the ring near the outer diameter, then pull on the shaft. If the

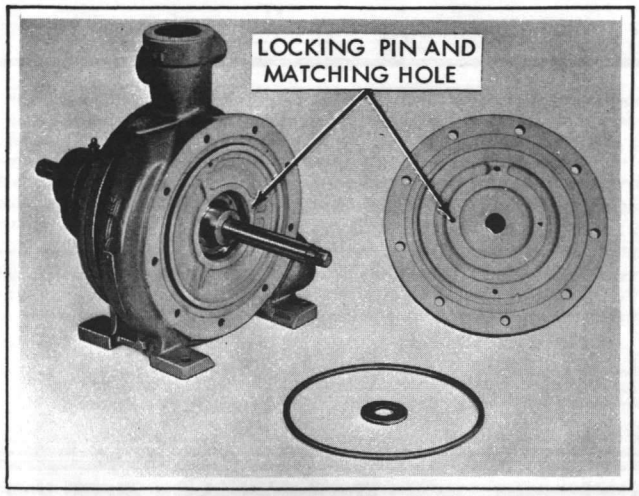

C. The pump with the packing type cover removed. The cover gasket and water slinger are in the foreground.

channel ring is tight in the casing, it may be driven out from the opposite side by means of a heavy hammer cushioned by a wood block, or, if such facilities are available pressed out hydraulically. Remove the inboard channel ring (35) by similar appropriate means. Remove impellers, shaft and spacer assembly. On two stage pumps remove the spacer key (41).

9. Slide the impeller(s) (37), off the shaft (33). Remove the impeller key(s) (38). Remove the spacers (39 and 40) on two stage pumps.

10. Remove the suction and discharge pipe plugs (43 and 44) from the casing (42).

11. If required, remove the name plate pins (45) and name plate (46).

REASSEMBLY. Clean and inspect all parts thoroughly prior to reassembly. Replace worn or damaged parts. Check that all mating surfaces are free of nicks and burrs. Inspect the shaft and bearings carefully for signs of excessive wear. Reassembly operations cover the entire pump. Reassembly will generally be in reverse order of disassembly but not exactly so. If disassembly was not complete, use for reference those steps which apply to your particular repair program. If the pump was removed from the baseplate, consult the installation section of this manual before operating again. Reassemble the pump as follows.

1. Subassemble inboard impeller key (38) and impeller (37) to shaft (33). For proper imeller key engagement, the impeller hub should face the outboard or threaded end of the shaft. On two stage pumps position spacer rings (40 and 39) on shaft.

Position outboard impeller key (38) and impeller (37) on two stage pumps.

2. Press cover lock pins (32) into channel rings (34 and 35). Set inboard channel ring (35) in casing (42). On two stage pumps, position spacer key (41) in slot at bottom of pump casing. Align matching slots in spacer rings and slide shaft, impeller and spacer assembly into place, making sure ports in spacer assembly match ports in casing. Position outboard channel ring (34) and slide into casing. Position cover gaskets (23).

3. If unit is equipped with mechanical seals, (a) slide drive collars (26) onto shaft, locate in accordance with scribed mark (see disassembly instructions) and secure with set screw (25). (b) Subassemble flexible cup and stationary seat to cover (20 and 21).

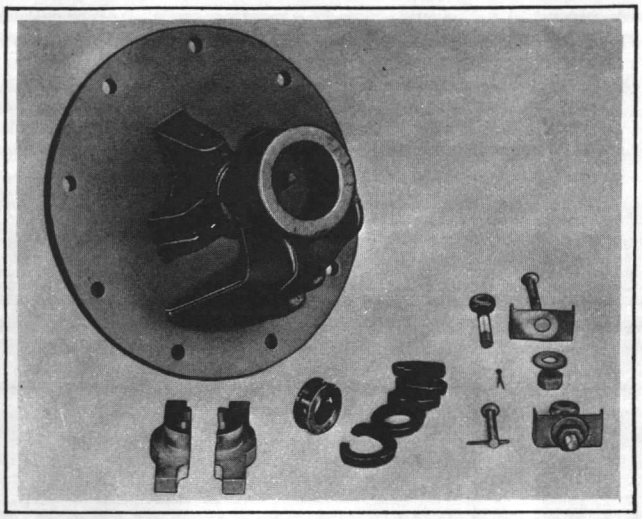

D. The standard cover with the packing, lantern ring and split gland. The swing bolts, clamps and clevis pins are at right.

NOTE

The mechanical seal (24) (see Figures 3 and 5) cannot be installed as an assembly. It is necessary to have the seal seat properly in place before the balance of parts can be added.

Thoroughly inspect the seal cavity in the cover checking for burrs or nicks which could damage the flexible cup of the mechanical seal. Apply a film of liquid dishwashing detergent to the flexible cup and seal seat. Insert seal in the cup and install.

NOTE

If it is not possible to insert seat with fingers, place cardboard protecting ring, furnished with seal, over lapped face of seat and press into place with a piece of tubing having end cut square. Tubing should be slightly larger than the diameter of the shaft. Remove cardboard ring after seat is firmly seated.

Apply a film of liquid dishwashing detergent to allow remaining seal parts to be pushed onto shaft. Check the proper sequence of assembly as indicated in Figure 1.

If a packing type unit is being reassembled, sub assemble packings (27) and lantern ring (28) to stuffing box cavity of cover.

4. Subassemble adjusting nut (30), slinger (22) and bearing (29) to cover (18 or 20) and slip cover assembly over shaft.

CAUTION

Proceed with care - do not damage mechanical seal parts if these are used.

As shaft end emerges from the stuffing box or seal cavity, slip slinger into place over shaft between housing and bearing arm. Position cover to casing, making sure lock pins (32) are engaged and secure using capscrews (17).

5. Subassemble adjusting nut (31), slinger (22) and bearing (9) to inboard cover and repeat step 4 above using covers (19 or 21).

6. Assemble and tighten jam nut (6) to outboard end of shaft. Assemble bearing lock collar (9) to inboard shaft end. Assemble adjusting nuts (5 and 7) to covers. Position pump coupling key (8).

7. Assemble pipe plugs, (44, 43, 3 and 2) and grease fittings (1).

8. Replace and tighten set screws (4).

9. Assemble swing bolts (16) using clevis pins (15) and cotter pins (14). Assemble glands (13) using clamps (12) washers (11) and nuts (10). Do not tighten nuts.

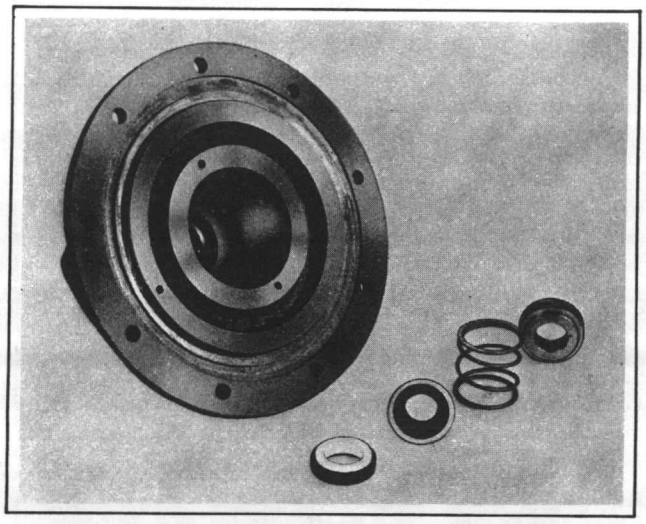

E. The inner surface of the mechanical seal cover. The thrust collar for the seal is at the far right; the seal components are in the foreground.

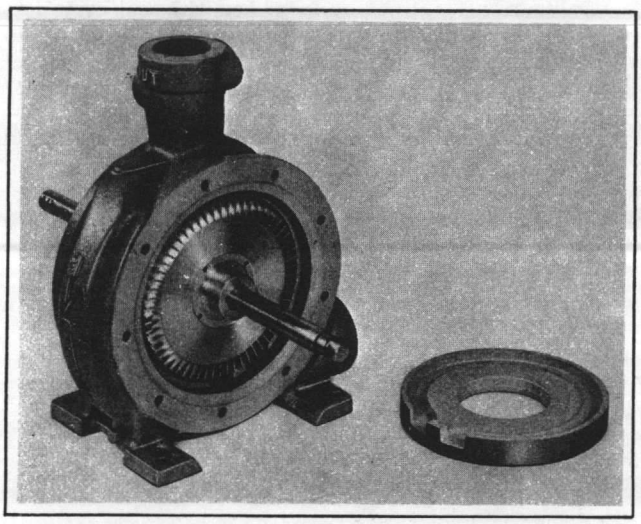

F. The pump with the outboard channel ring removed. The shape of the waterway and the location of the intake and discharge ports can be seen.

10. If nameplate (46) was removed reattach with screws (45).

STARTING PUMP AFTER REASSEMBLY. Do not start pump until all air and vapor has been bled and there is liquid in the pump to provide the necessary lubrication. It is possible that the mechanical seal may drip during first few minutes of operation.

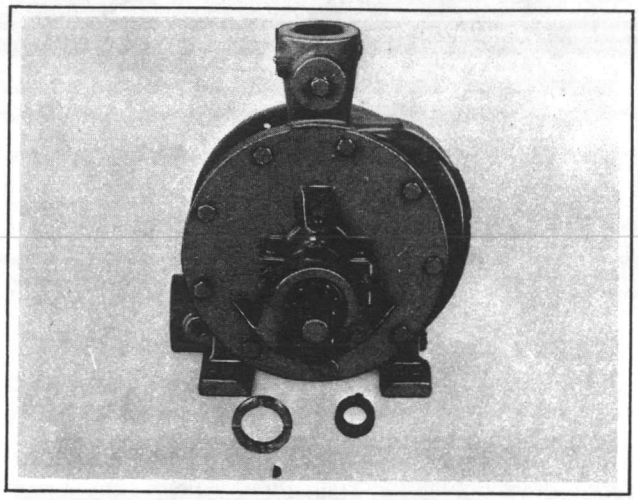

G. The inboard end of the pump with the coupling key. The outer adjusting nut and the collar of the lock bearing assembly.

NOTE

Do not over tighten packing, final adjustment must be made after pump is operating.

When adjusting packing, turn both nuts down evenly a flat or two at a time. Let packing work in, then tighten the gland nut another flat or two. This process should be continued until drip rate is approximately 20 to 30 drops per minute. Over tightening a gland will cause the stuffing box to heat up and will also cause excessive wear on the shaft.

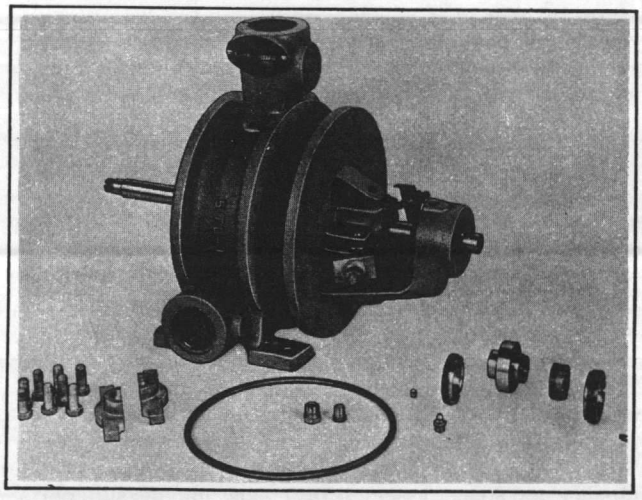

H. The inboard end of the pump with a standard cover. The outer adjusting nut, the collar and bearing, and the inner adjusting nut are shown at the right.

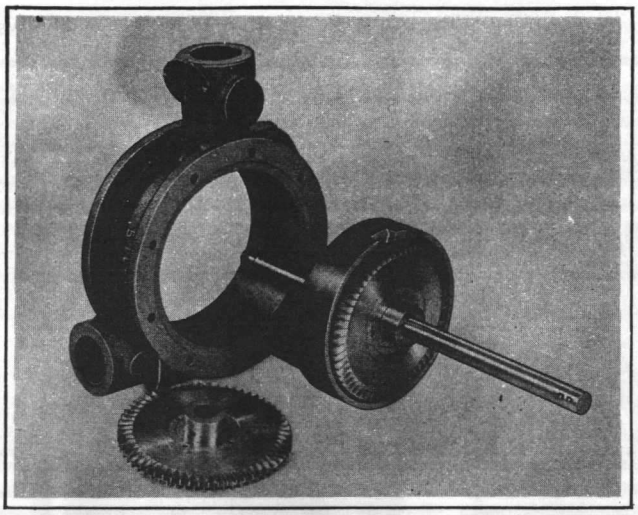

I. The pump with the shaft, impellers and spacer rings removed. The outboard impeller has been slipped off the shaft.

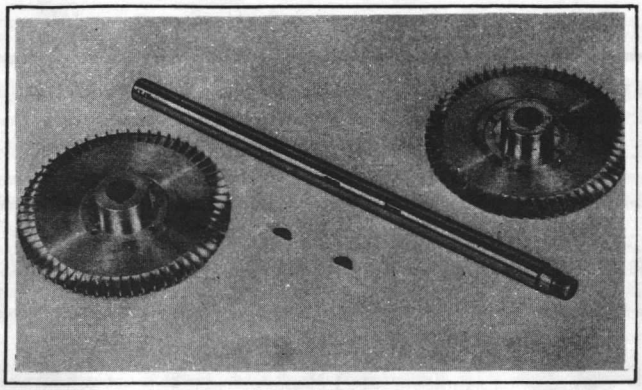

J. The shaft, impellers and impeller keys for a two stage pump.

LIST OF PARTS
MODEL 114-115-116 SINGLE STAGE PUMPS
(See Figures 2 and 3)

1. Grease Fitting
2. Pipe Plug
3. Pipe Plug
4. Setscrew
5. Nut
6. Nut
7. Nut
8. Key
9. Bearing and Collar
10. Nut
11. Washer
12. Clamp
13. Gland Half
14. Cotter Pin
15. Clevis Pin
16. Swing Bolt
17. Capscrew
18. Cover
19. Cover
20. Cover
21. Cover
22. Slinger
23. "O" Ring
24. Seal
25. Setscrew
26. Collar
27. Packing
28. Lantern Ring (Optional)
29. Bearing
30. Nut
31. Nut
32. Pin
33. Shaft
34. Channel Ring O.B.
35. Channel Ring I.B.
37. Impeller
38. Key
42. Casing
43. Pipe Plug
44. Pipe Plug
45. Drive Screw
46. Nameplate

LIST OF PARTS
MODEL 114-115-116 TWO STAGE PUMPS
(See Figures 4 and 5)

1. Grease Fitting
2. Pipe Plug
3. Pipe Plug
4. Setscrew
5. Nut
6. Nut
7. Nut
8. Key
9. Bearing and Collar
10. Nut
11. Washer
12. Clamp
13. Gland Half
14. Cotter Pin
15. Clevis Pin
16. Swing Bolt
17. Capscrew
18. Cover
19. Cover
20. Cover
21. Cover
22. Slinger
23. "O" Ring
24. Seal
25. Setscrew
26. Collar
27. Packing
28. Lantern Ring (Optional)
29. Bearing
30. Nut
31. Nut
32. Pin
33. Shaft
34. Channel Ring O.B.
35. Channel Ring I.B.
37. Impeller
38. Key
39. Spacer
40. Spacer
41. Key
42. Casing
43. Pipe Plug
44. Pipe Plug
45. Drive Screw
46. Nameplate

NOTE

WHEN ORDERING SPARE PARTS ALWAYS INCLUDE THE PUMP TYPE, SIZE, SERIAL NUMBER, AND THE PIECE NUMBER FROM THE EXPLODED VIEW IN THIS MANUAL.

ORDER ALL PARTS FROM YOUR LOCAL AUTHORIZED DISTRIBUTOR, FACTORY BRANCH SALES OFFICE OR THE FACTORY AT NORTH AURORA, ILLINOIS.

SINGLE STAGE PUMPS

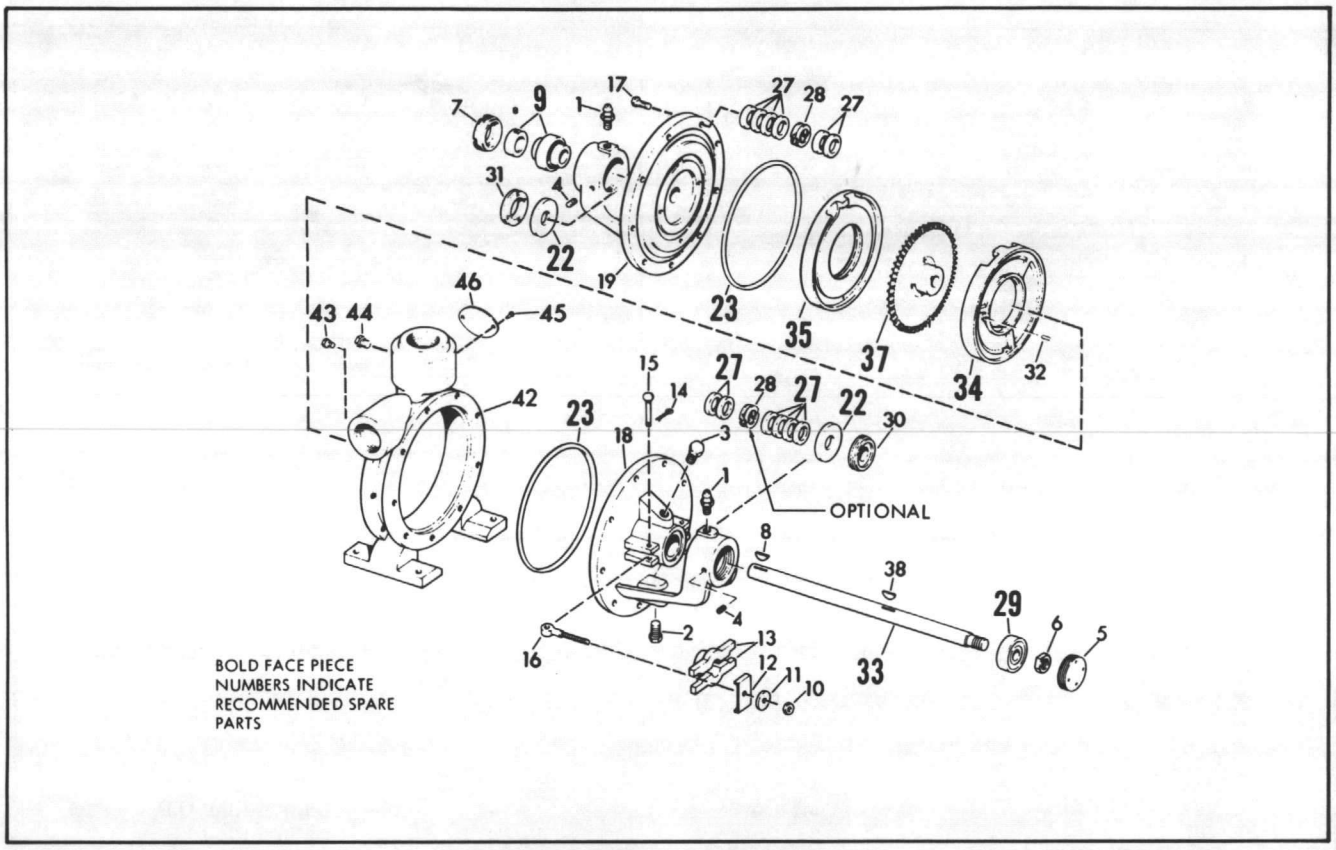

Figure 2. Pump Exploded View (Standard Packing)

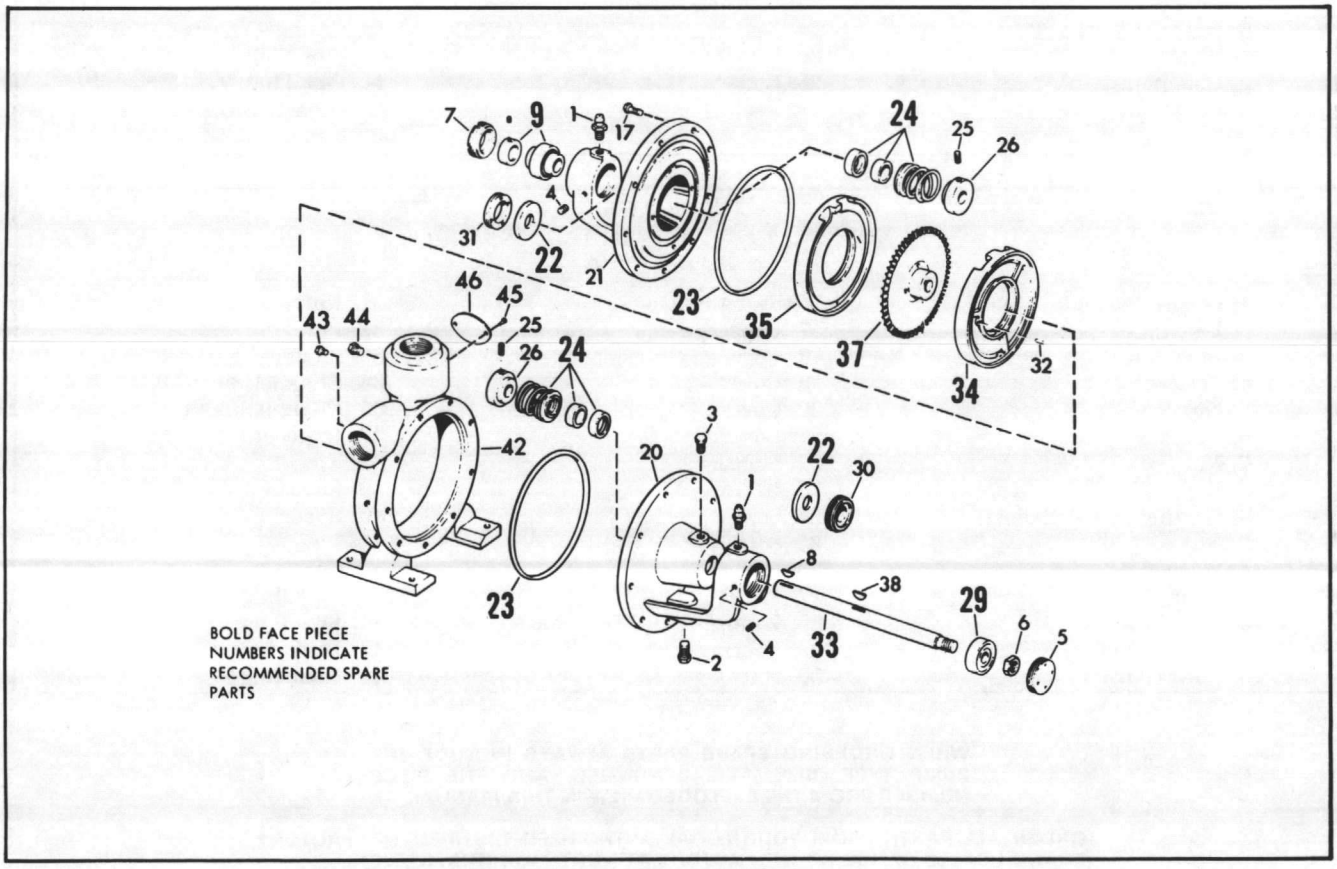

Figure 3. Pump Exploded View (Mechanical Seal)

TWO STAGE PUMPS

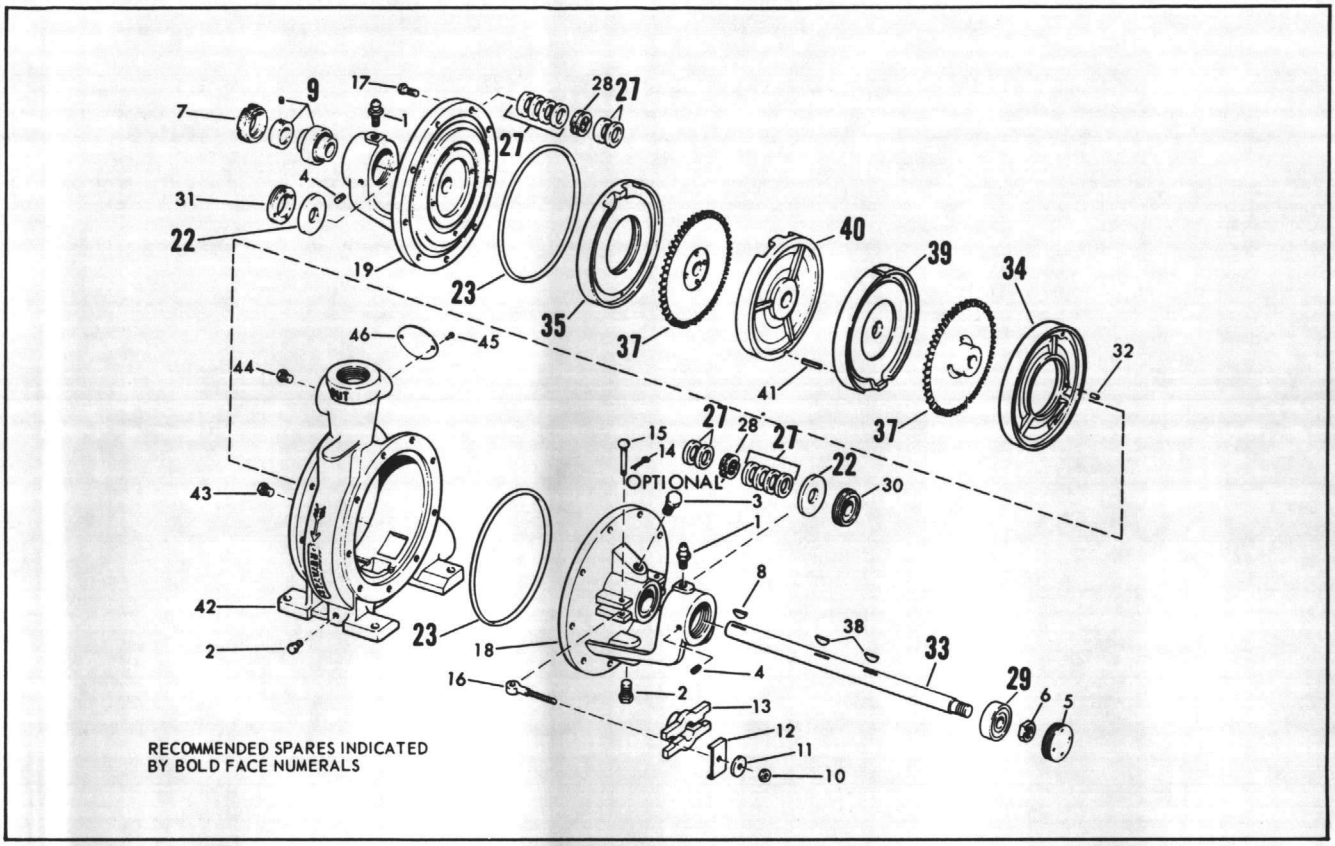

Figure 4. Pump Exploded View (Standard Packing)

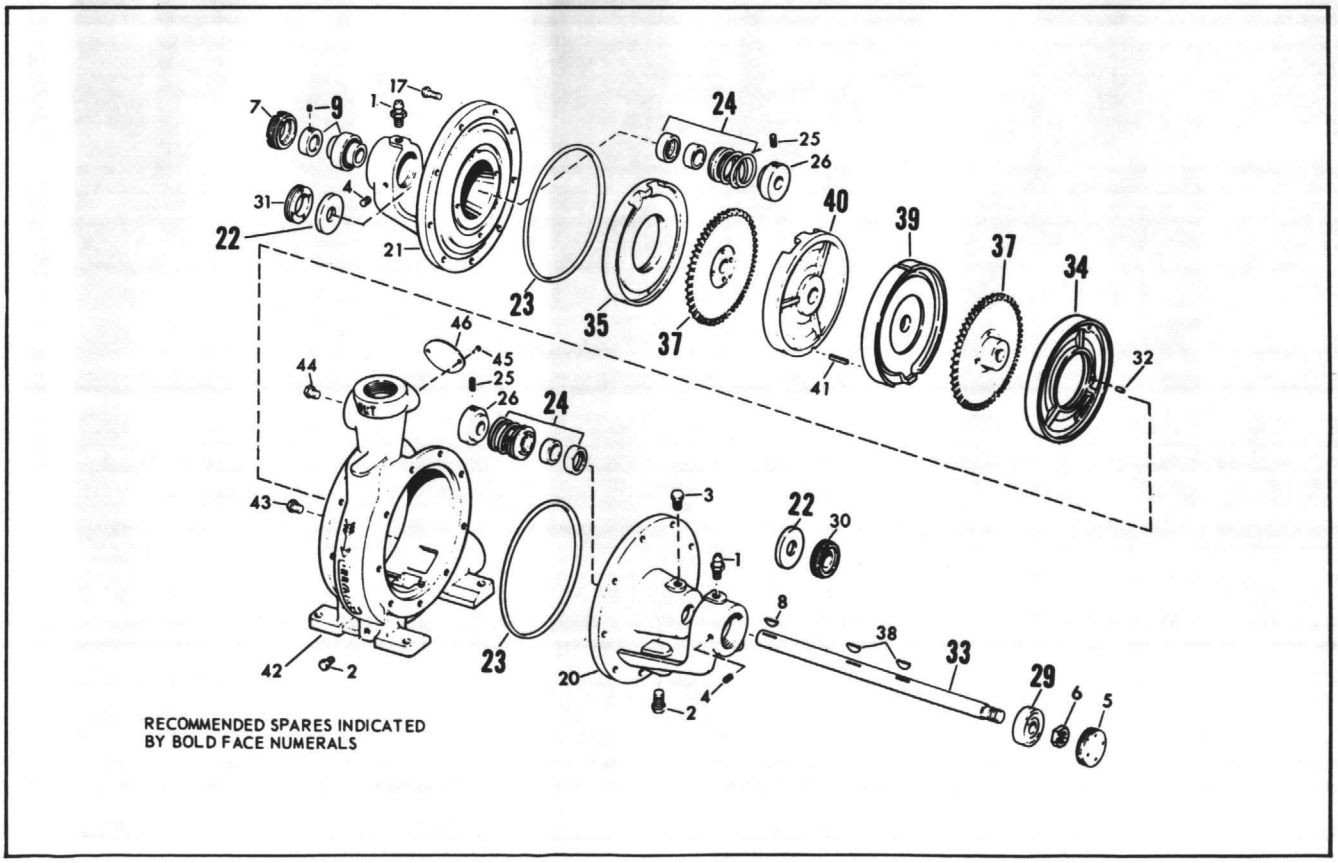

Figure 5. Pump Exploded View (Mechanical Seal)

MANUFACTURER'S REPRESENTATIVES AND DISTRIBUTORS

MATT MARSHALL & COMPANY

INDUSTRIAL EQUIPMENT & SALES
BOILER & BURNER—SALES & SERVICE

MAIL TO - P.O. Box 77357 - Greensboro, N.C. 27417-7357
I-85-S - Exit 120 - 2249 Bishop Road - Greensboro, N.C. 27406
Phone (336) 292-8477 Fax (336) 299-0249

FACSIMILE TRANSMITTAL SHEET

TO: Base Mart

ATTN: Mahamed

FROM: Mike

DATE: 2/9/99.

1 PAGE(S) ARE BEING TRANSMITTED.

FOR ASSISTANCE PLEASE NOTIFY SENDER.

COMMENTS/MESSAGE: Quote.

Part # Your Cost Est

Aurora #30I4T-3Ph Cond. Unit $2,300.00
W/ 3ph Pump, Sight Glass + Float Switch.
Complete.

6-8 Week Delay.

Thank you, Mike.

SERVING INDUSTRY SINCE 1954
STEAM IS OUR SPECIALTY, WE CAN HELP YOU MAKE IT AND CONTROL IT

Julie

Mr Mahammed from Base Maintenance came over. What we received was only part of the unit.

What he wants is 30I 4T-3PH which is the whole unit.

Model 211-Simplex is 30I 4T-3PH

It have only one pump with a 30 gal tank.

Look at what I circled. Page 2 and page 4 It contain all of page 1 front cover description.

I call Mr. Hicks about ~~our~~ our description he is talking about a serial #.

Josephine.

PPPPP A CCC K K IIIII N N
P P A A C K K I NN N
PPPP AAAAA C KKK I N N N
P A A C K K I N NN
P A A CCC K K IIIII N N

FAX TRANSMITTAL # of pages ► 1

To Ken Hicks	From Julie Batchelor DSSC, Shop Stores
Dept./Agency Mechanical Equipment Co	Phone # 910-451-5163
Fax # 704-847-2349	Fax # 910-451-5301

NSN 7540-01-317-7368 5099-101 GENERAL SERVICES ADMINISTRATION

2/11/99 PAGE 01 * 9Y9-07328 *
ORIGINAL MJH MJH **********

CUST ORDER NO
F72022/826285

N/A DC

SHIP TO: DSSC-SHOP STORES BRANCH
BLDG 1301 DOOR 4
MCB
CAMP LEJEUNE NC 28542

FREIGHT
PREPD NOT ALWD

MARKS- P.O. # BOSS05991019

CUST#	EXEMPT #	DIST	STATE	SHIP VIA	REQST- 2/18/99 SCHED-
434960	605-1-060-17498	0660	NC		

PROD	QTY	LIST LN	PART	DESCRIPTION	QTY SHIPPED
				MARKS P.O. # BOSS05991019	
1114	1	01	X101176	S/N 99-07328- 1	
			1.25X1.25X4	I4T 114A BF	
			69A	LEFT HAND ROTATION	
			14AJ	STEEL BASE W/COUP GUARD	
			34R	COUPLING L095	
			LOVEJOY CPLG L095		
1188	1	02	922-3291-81E		
			3	HP 3-60-230/460 1750 RPM	
			HOR ODP MTR 182T FR EPACT		

What they sent. I4T

------- SHIP WITH ORDERS -------
9Y907327

*** SEE PRINTED BILLS FOR COMPLETE BILL INFORMATION ***
K1237-1 K4290-1

RPM	MTRFR	HP
1750	182T	3

PH	HZ	VOLTS	ENCL	DSTCTR
3	90	208/230/460	ODP	YES

PULLED BY:_____ BUILT BY:_____ PACKAGED BY: 2/24/99

NO MATERIAL SHOULD BE RETURNED WITHOUT PRIOR WRITTEN AUTHORIZATION. ALL INQUIRIES AND CORRESPONDENCE SHOULD BE SENT WITH THIS NBR-9Y9-07328 TO THE ADDRESS BELOW: (ANY SHORTAGES MUST BE REPORTED WITHIN THREE WEEKS.)

MANUFACTURING POINT:
AURORA PUMP
A UNIT OF GENERAL SIGNAL
800 AIRPORT ROAD
NORTH AURORA IL. 60542

P A C K I N G L I S T

PPPPP A CCC K K IIIII N N
P P A A C K K I NN N
PPPP AAAAA C KKK I N N N
P A A C K K I N NN
P A A CCC K K IIIII N N

FAX TRANSMITTAL | # of pages ► 1

To Ken Hicks	From Julie Batchelor DSSC, Shop Store
Dept./Agency Mechanical Equipment Co	Phone # 910-451-5163
Fax # 704-847-2349	Fax # 910-451-5301

NSN 7540-01-317-7368 5099-101 GENERAL SERVICES ADMINISTRATION

2/11/99 PAGE 01 * 9Y9-07328 *
ORIGINAL MJH MJH **********

CUST ORDER NO
F72022/826285

N/A DC

SHIP TO: DSSC-SHOP STORES BRANCH
BLDG 1301 DOOR 4
MCB
CAMP LEJEUNE NC 28542

FREIGHT
PREPD NOT ALWD

MARKS- P.O. # BOSS05991019

CUST#	EXEMPT #	DIST	STATE	SHIP VIA	REQST- 2/18/99
434960	605-1-060-17498	0660	NC		SCHED-

PROD	QTY	LIST LN	PART	DESCRIPTION	QTY SHIPPED
				MARKS P.O. # BOSS05991019	
1114	1	01	X101176	S/N 99-07328- 1	
			1.25X1.25X4	I4T 114A BF	
			69A	LEFT HAND ROTATION	
			14AJ	STEEL BASE W/COUP GUARD	
			34R	COUPLING L095	
			LOVEJOY CPLG L095		
1188	1	02	922-3291-81E		
			3	HP 3-60-230/460 1750 RPM	
			HOR ODP MTR 182T FR EPACT		

------- SHIP WITH ORDERS -------
9Y907327

*** SEE PRINTED BILLS FOR COMPLETE BILL INFORMATION ***
K1237-1 K4290-1

RPM	MTRFR	HP
1750	182T	3

PH	HZ	VOLTS	ENCL	DSTCTR
3	90	208/230/460	ODP	YES

PULLED BY:_____ BUILT BY:_____ PACKAGED BY:_____

NO MATERIAL SHOULD BE RETURNED WITHOUT PRIOR WRITTEN AUTHORIZATION. ALL INQUIRIES AND CORRESPONDENCE SHOULD BE SENT WITH THIS NBR-9Y9-07328 TO THE ADDRESS BELOW: (ANY SHORTAGES MUST BE REPORTED WITHIN THREE WEEKS.)

MANUFACTURING POINT:
AURORA PUMP
A UNIT OF GENERAL SIGNAL
800 AIRPORT ROAD
NORTH AURORA IL. 60542

P A C K I N G L I S T

341 pumps

AURORA TYPE 4RTL AND 4RTLS SERIES

TWO STAGE APCO PUMPS ON STEEL BASE

RIGHT HAND PUMP ILLUSTRATED

PUMP MODELS	D4T	E4T	F4T	G4T	I4T	I4TA

280

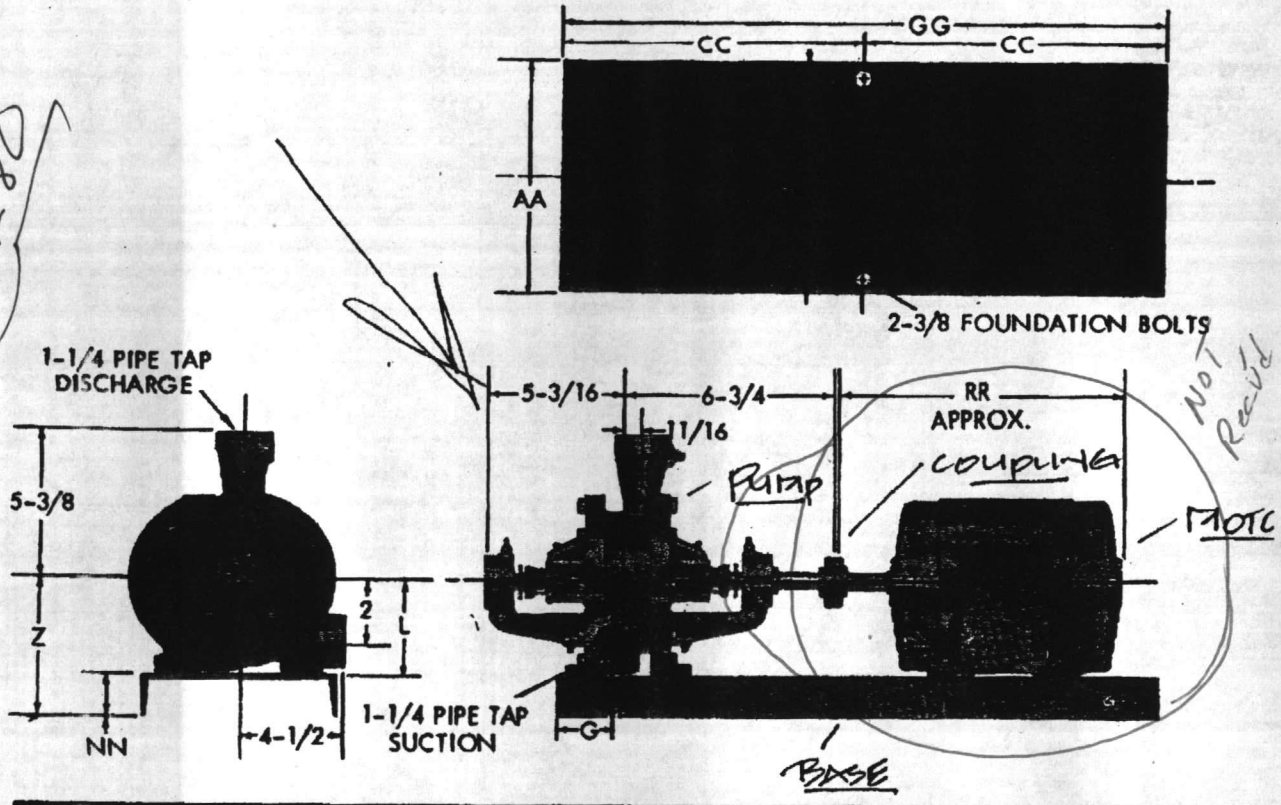

FRAME	G	L	Z	AA	BB	CC	GG	JJ	NN	RR
56	2-1/8	3-1/2	6	9	7	10-1/2	21	1	2-1/2	13
143T	2-1/8	3-1/2	6	9	7	10-1/2	21	1	2-1/2	12
145T	2-1/8	4-1/8	6	9	7	10-1/2	21	1	2-1/2	13
182T	3	4-1/2	7-1/8	10	7	12	24	1-1/2	2-5/8	13
184T	3	4-1/2	7-1/8	10	7	12	24	1-1/2	2-5/8	14
213T	3	5-1/4	8-1/4	12	9	13-1/2	27	1-1/2	3	16
215T	3	5-1/4	8-1/4	12	9	13-1/2	27	1-1/2	3	18

NOTES:

1. All dimensions in inches.
2. Dimensions may vary ± 1/8.
3. Not for construction purposes unless certified.
4. Coupling gap may vary 1/8" to 1".
5. Conduit box is located on the opposite side of the motor shown. Capacitor, when furnished, normally appears on top of motor. Dimensions are not specified as they vary with each motor manufacturer.

GS AURORA PUMP
A UNIT OF GENERAL SIGNAL
800 AIRPORT ROAD • NORTH AURORA, ILLINOIS 60542

MECHANICAL EQUIPMENT COMPANY
Providing Solutions - Water • Process Fluids • Steam *Since 1940* (704)847-2100; (Fax) 847-2349

MECOFAX

To: JULIE. BATCHELOR
@: DSL-SHOP STORES.
Fax: 910.451.5301 Phone:
Re: AURORA PUMPS

From: Ken Hicks Ext 113
Pages: 2
Date: 2/25/99.

☐ Urgent ☒ For Review ☐ Please Comment ☐ Please Reply ☐ As Requested

MESSAGE:

JULIE,

PUMP ASSEMBLY DRAWING FOLLOWS - THIS IS WHAT WAS SHIPPED - IF WHAT YOU RECEIVED DOES NOT LOOK LIKE THIS PLEASE CIRCLE WHAT YOU DID RECEIVE.

FACTORY INSISTS THEY SHIPPED ASSEMBLY AS SHOWN ON PICTURE FOLLOWING.

REGARDS,

KH

CC:

OPTIONAL EQUIPMENT

AURORA MODEL 281, 282, 282A AND 283A

280 SERIES DUPLEX 2-STAGE POWER FEED PUMP.

10

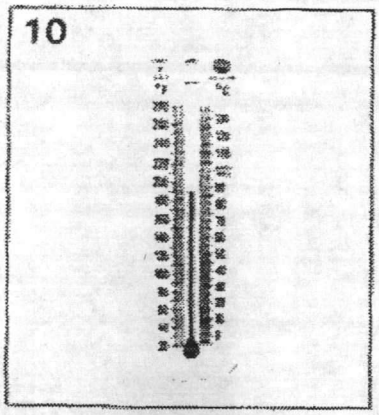

11

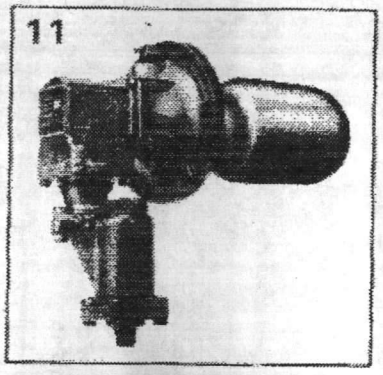

16E

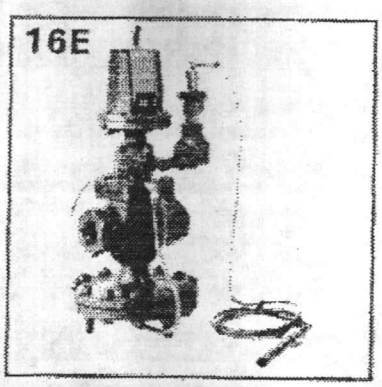

17

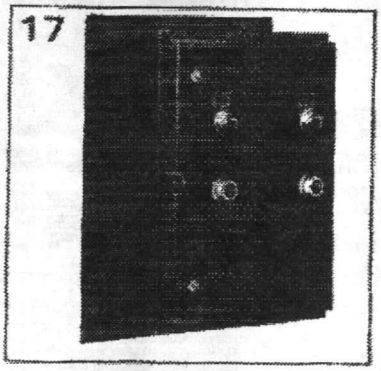

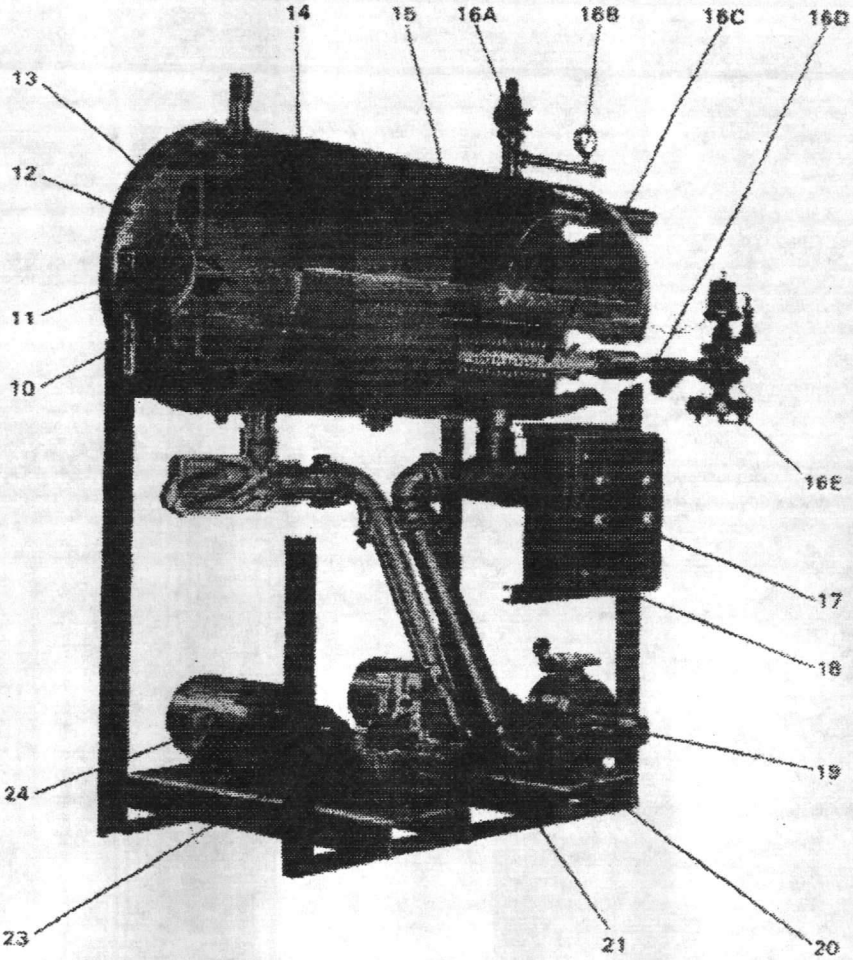

OPTIONAL EQUIPMENT

10 THERMOMETER provides readings in F° and C° scales.
- A) Back angle (illustrated)
- B) 3" Dial

11 MAKE-UP FEEDER VALVE.
- A) Series 21 for 30, 60 & 100 gallon receivers
- B) Series 25 for 200, 250 & 350 gallon receivers
- C) Special order over 500 gallon receivers

12 125# ASME CODE RECEIVERS of equivalent capacity. Manholes 11" x 15" are included in receiver sizes 350 gallons thru 1000 gallons.

13 ADDITIONAL PIPE TAPS in receiver.

14 MANHOLE 11" x 15" for receiver capacities of 750 and 1000 gallons.

15 MAGNESIUM ANODE provides electrolytic corrosion protection.

16 STEAM HEATER PACKAGE consisting of the following:

16A Relief val

16B Pressure

16C Preheater tube

16D "Y" strainer

16E Temp. regulating valve:
- a) Low pressure 25T (5-15 P.S.I. steam) WITHOUT pressure reducing attachment.
- b) High pressure 25PT (60-200 P.S.I. steam) WITH pressure reducing attachment.

NOTE: Item 16 components can be provided separately.

17 PREWIRED CONTROL PANEL to all integral H.P. motors includes external reset buttons and hand-off-automatic switches. See Bulletin 280 for details.

18 ELECTRIC ALTERNATOR mounted and wired on duplex.

19 MECHANICAL SEALS for turbine pumps.

20 SPECIAL PUMPS.

21 PRESSURE GAUGES.

23 DUPLEX, DUAL AND TRIPLEX units. See

Post-it® Fax Note 7671	Date 2/25	# of pages ▶ 2
To JUNE	From K. HICKS	
Co./Dept. AURORA PUMP	Co. MECO	
Phone #	Phone # 704-847-2100	
Fax # 110451-539	Fax #	

GS AURORA PUMP
A UNIT OF GENERAL SIGNAL
800 AIRPORT ROAD • NORTH AURORA, ILLINOIS 60542

AURORA MODEL 281, 282, 282A

BOILER FEED UNIT

SIMPLEX-DUPLEX-DUAL

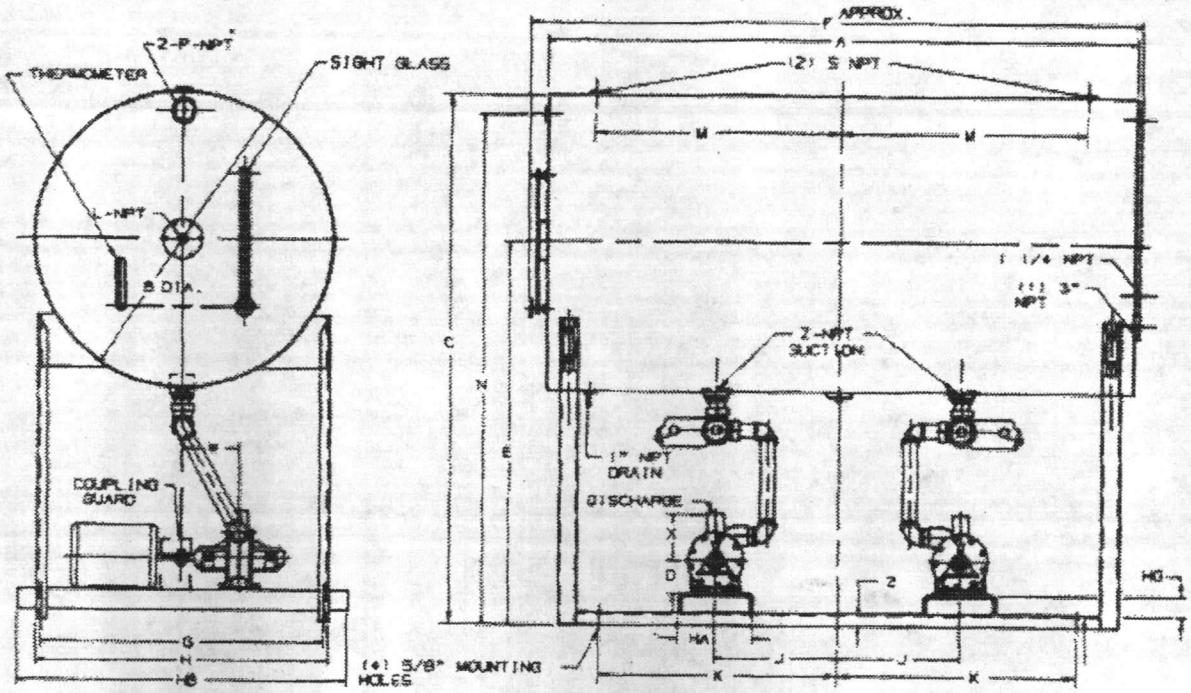

PUMP MODEL	PUMP TYPE	PUMP SIZE	DISCHARGE	D	W	X
114	4R	A3S, A4, B4, C4, D4, E4, F4, G4, H4, I4, I4A	1 1/4 NPT	3 1/2	5 15/16	6 1/4
	4RA	M4, P4, R4	1 1/2 NPT	3 1/2	8 1/8	5 3/8
	4RTL	D4T, E4T, F4T, G4T, I4T, I4TA	1 1/4 NPT	3 1/2	6 3/4	5 3/8
115	5R	D5, E5, F5, G5, H5, I5	1 1/4 NPT	4 3/4	8 3/8	7 1/2
	5RA	J5, K5, L5, M5, N5, P5	1 1/2 NPT	4 3/4	9 3/8	7 1/2
	5RTL	D5T, E5T, F5T, G5T H5T, I5T	1 1/4 NPT	4 3/4	8 5/8	7 1/2
116	6RA	G6, H6, J6, K6	2 1/2 * *	6 1/4	12 3/16	8
	6RTL	D6T, E6T, F6T	2 ***	6 1/4	12 3/16	7 1/2
	6RATL	G6T, H6T, J6T, K6T	2 1/2 ***	6 1/4	13 13/16	7 1/2

FRAME	D
5R	3 1/2
143T	3 1/2
145T	3 1/2
182T	4 1/2
184T	4 1/2
213T	5 1/4
215T	5 1/4
254T	6 1/4
256T	6 1/4
284TS	7
284T	7
286TS	7
286T	7
324TS	8
324T	8

RECEIVER CAPACITY GALLONS	A	B	C	E	F	G	H	J	K	L	M	N	P	S	Z	MINIMUM BASE NUMBER
30	37	16	42 3/16	34	44	14 1/4	15 3/4	9	16	3/4	14 1/2	40	2	2		1
60	37	22	49 11/16	38 1/2	44	20 3/8	21 7/8	9	16	3/4	15	47	2	2	1 1/4	3
100	51	24	59 11/16	47 1/2	58	21 1/4	22 3/4	11	21	3/4	20 1/2	57	2	3		3
200	65	30	77 3/16	62	72	26 1/4	27 3/4	17	25 1/2	1	26 1/2	74	3	3		6
250	60	36	80 3/16	62	67	29 3/8	29 7/8	17	25 1/2	1	26 1/2	77	3	3		6
350	60	42	80 3/16	59	67	36 3/4	38 1/4	17	25 1/2	1 1/2	26 1/2	76	3	3	3	7
500	84	42	80 3/16	59	91	37 3/8	38 7/8	17	28 1/2	1 1/2	38 1/2	76	3	3		7
750	96	48	88 3/16	64	103	45 1/2	47	17	35 1/2	1 1/2	40	86	3	3		11
1000	120	48	88 3/16	64	127	45 1/2	47	17	47 1/2	1 1/2	52	86	3	3	3	11

BASE NUMBER	HA	HB	HG
1	7	18	2
2	9	21	2 1/2
3	9	24	2 1/2
4	10	24	2 5/8
5	10	26	2 5/8
6	12	30	3
7	12	39	3 1/4
8	13	38	4
9	13	42	4
10	15	44	3 3/8
11	15	48	3 3/8

NOTES:

1. ALL DIMENSIONS IN INCHES.
2. DIMENSIONS MAY VARY ±1/4.
3. NOT FOR CONSTRUCTION PURPOSES UNLESS CERTIFIED.
4. COUPLING GAP MAY VARY 1/8" TO 1".
5. DUPLEX MODEL 282 ILLUSTRATED.
6. WHERE TWO-D DIMENSIONS ARE INDICATED ALWAYS USE THE LARGER FIGURE.

* INLET AND VENT PIPING BY CUSTOMER.
** 125# DISCHARGE FLANGE.
*** 250# DISCHARGE FLANGE.
MODEL 281 = SIMPLEX
MODEL 282 = DUPLEX

GS AURORA PUMP
A UNIT OF GENERAL SIGNAL
800 AIRPORT ROAD • NORTH AURORA, ILLINOIS 60542