DOT HS-802 346

EVALUATION METHODOLOGIES FOR FOUR FEDERAL MOTOR VEHICLE SAFETY STANDARDS

FMVSS 214: Side Door Strength
FMVSS 215: Exterior Protection
FMVSS 301: Fuel System Integrity
FMVSS 208: Occupant Crash Protection

Contract No. DOT-HS-6-01518

May 1977

Final Report

PREPARED FOR:

U.S. DEPARTMENT OF TRANSPORTATION
NATIONAL HIGHWAY TRAFFIC SAFETY ADMINISTRATION
WASHINGTON, D.C. 20590

Document is available to the public through
the National Technical Information Service,
Springfield, Virginia 22161

Prepared for the Department of Transportation, National Highway Traffic Safety Administration, under Contract No.: DOT-HS-6-01518. This document is disseminated under the sponsorship of the Department of Transportation in the interest of information exchange. The United States Government assumes no liability for the contents or use thereof.

NOTICE

The United States Government does not endorse products or manufacturers. Trade or manufacturer's names appear herein solely because they are considered essential to the object of this report.

1. Report No.	2. Government Accession No.	3. Recipient's Catalog No.
DOT HS 802 346		

4. Title and Subtitle

EVALUATION METHODOLOGIES FOR FOUR FEDERAL MOTOR VEHICLE SAFETY STANDARDS

FMVSS 214: Side Door Strength FMVSS 301: Fuel System Integrity
FMVSS 215: Exterior Protection FMVSS 208: Occupant Crash Protection

5. Report Date
May 1977

6. Performing Organization Code

7. Author(s)
Gaylord M. Northrop

8. Performing Organization Report No.
CEM Report 4207-568

9. Performing Organization Name and Address

The Center for the Environment and Man, Inc.
275 Windsor Street
Hartford, Connecticut 06120

10. Work Unit No.

11. Contract or Grant No.
DOT-HS-6-01518

12. Sponsoring Agency Name and Address

U.S. Department of Transportation
National Highway Traffic Safety Administration
400 Seventh Street, S.W.
Washington, D.C. 20590

13. Type of Report and Period Covered
Final Report
Oct. 1976 - March 1977

14. Sponsoring Agency Code

15. Supplementary Notes

16. Abstract

This is the final report of the study to develop methodologies for evaluating the effectiveness of four selected Federal Motor Vehicle Safety Standards--FMVSS 214: Side Door Strength; FMVSS 215: Exterior Protection; FMVSS 301: Fuel System Integrity; and FMVSS 208: Occupant Crash Protection. This report provides a summary and overview of the nine preceding reports and an integration of the individual approaches developed for evaluating each Standard in earlier reports. This report includes conclusions and recommendations, reviews of the four Standards, approaches to evaluating the Standards, discussion of the methodologies for evaluation, and alternative implementation plans for performing the evaluations, individually and in an integrated fashion. The projected cost of the total evaluation program for the four Standards is between $1.7 and $2.0 million. With the exception of the evaluation of passive restraint systems, the evaluations could be completed within 24 months, but a more cost effective program could take three to four years.

17. Key Words
Federal Motor Vehicle Safety Standards
Evaluation Methodologies
FMVSS 214, FMVSS 215,
FMVSS 301, FMVSS 208
Statistical Methods

18. Distribution Statement
Document is available to the public through the National Technical Information Service, Springfield, Virginia 22161

19. Security Classif. (of this report)	20. Security Classif. (of this page)	21. No. of Pages	22. Price
UNCLASSIFIED	UNCLASSIFIED	147	

METRIC CONVERSION FACTORS

Approximate Conversions to Metric Measures

Symbol	When You Know	Multiply by	To Find	Symbol
		LENGTH		
in	inches	*2.5	centimeters	cm
ft	feet	30	centimeters	cm
yd	yards	0.9	meters	m
mi	miles	1.6	kilometers	km
		AREA		
in^2	square inches	6.5	square centimeters	cm^2
ft^2	square feet	0.09	square meters	m^2
yd^2	square yards	0.8	square meters	m^2
mi^2	square miles	2.6	square kilometers	km^2
	acres	0.4	hectares	ha
		MASS (weight)		
oz	ounces	28	grams	g
lb	pounds	0.45	kilograms	kg
	short tons (2000 lb)	0.9	tonnes	t
		VOLUME		
tsp	teaspoons	5	milliliters	ml
Tbsp	tablespoons	15	milliliters	ml
fl oz	fluid ounces	30	milliliters	ml
c	cups	0.24	liters	l
pt	pints	0.47	liters	l
qt	quarts	0.95	liters	l
gal	gallons	3.8	liters	l
ft^3	cubic feet	0.03	cubic meters	m^3
yd^3	cubic yards	0.76	cubic meters	m^3
		TEMPERATURE (exact)		
°F	Fahrenheit temperature	5/9 (after subtracting 32)	Celsius temperature	°C

*1 in = 2.54 (exactly). For other exact conversions and more detailed tables, see NBS Misc. Publ. 286, Units of Weights and Measures, Price $2.25, SD Catalog No. C13.10:286.

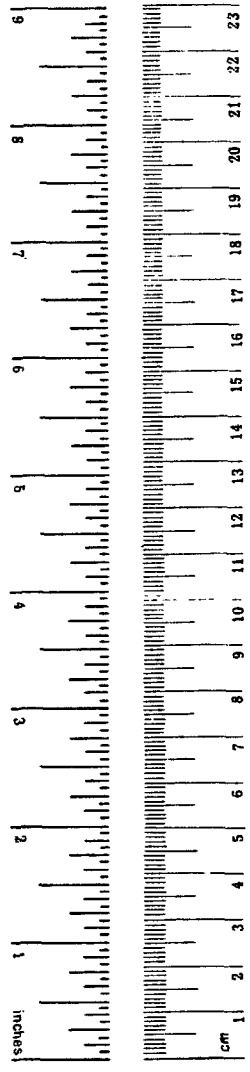

Approximate Conversions from Metric Measures

Symbol	When You Know	Multiply by	To Find	Symbol
		LENGTH		
mm	millimeters	0.04	inches	in
cm	centimeters	0.4	inches	in
m	meters	3.3	feet	ft
m	meters	1.1	yards	yd
km	kilometers	0.6	miles	mi
		AREA		
cm^2	square centimeters	0.16	square inches	in^2
m^2	square meters	1.2	square yards	yd^2
km^2	square kilometers	0.4	square miles	mi^2
ha	hectares (10,000 m^2)	2.5	acres	
		MASS (weight)		
g	grams	0.035	ounces	oz
kg	kilograms	2.2	pounds	lb
t	tonnes (1000 kg)	1.1	short tons	
		VOLUME		
ml	milliliters	0.03	fluid ounces	fl oz
l	liters	2.1	pints	pt
l	liters	1.06	quarts	qt
l	liters	0.26	gallons	gal
m^3	cubic meters	35	cubic feet	ft^3
m^3	cubic meters	1.3	cubic yards	yd^3
		TEMPERATURE (exact)		
°C	Celsius temperature	9/5 (then add 32)	Fahrenheit temperature	°F

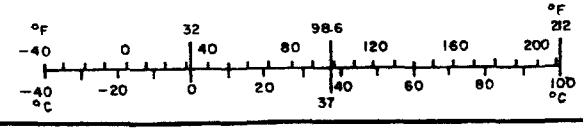

EXECUTIVE SUMMARY

This report summarizes the work performed by The Center for the Environment and Man, Inc. (CEM) to design statistical methodologies and implementation plans for evaluating the effectiveness of four specified Federal Motor Vehicle Safety Standards (FMVSS). The four Standards that have been examined are:

- FMVSS 214 - Side Door Strength
- FMVSS 215 - Exterior Protection (Bumpers)
- FMVSS 301 - Fuel System Integrity
- FMVSS 208 - Occupant Crash Protection

This report includes conclusions and recommendations about evaluating the Standards, reviews of the Standards, approaches to their evaluation, discussion of the evaluation methodologies, and implementation plans for doing the evaluation, individually and in an integrated fashion.

Judgmentally, the following comments can be made concerning the feasibility of demonstrating the effectiveness of each of the Standards. Presentation is ordered by greatest likelihood of success in establishing that the Standard meets its objectives.

- FMVSS 208 - Occupant Crash Protection
  - Previous analyses have shown that lap belts and lap/shoulder belts are effective in reducing bodily injury in crashes.
    - -- The analysis proposed herein will sharpen the results of previous studies and attempt to include the effect of crash speed and direction.
  - Preliminary review of tests involving passive restraint systems, such as cited in the Secretary's June 9, 1976 statement, have suggested they are effective in reducing bodily injury in crashes.
    - -- The analyses proposed herein will provide the estimate(s) of effectiveness, but adequate data for passive systems will probably not be available for at least three years.
- FMVSS 215 - Exterior Protection
  - Fragmented analyses indicated that in low speed front/rear crashes the 5 mph bumpers reduce damage to certain vehicle parts. (Repair cost may be higher in high speed crashes, but that is not involved in the objective of the Standard.)
    - -- The analyses proposed herein, when considered together, will probably be sufficient to determine some aspects of the effectiveness of this Standard.

- FMVSS 214 - Side Door Strength
  - Existing and anticipated data bases (state mass accident data and NCSS data) are likely to be inadequate in terms of injury information or number of cases to show the effectiveness of side door beams to reduce passenger compartment intrusion and occupant bodily injury, with a satisfactory level of statistical significance.
    - -- If additional NCSS-type data are obtained, it is possible that the effectiveness of this Standard may be determined, at least in terms of passenger compartment intrusion. The added stiffness due to the side door beam may cause a shift in bodily injury from torso to head, complicating the analysis of the effectiveness of side door beams in reducing bodily injury.

- FMVSS 301 - Fuel System Integrity
  - We found no existing data readily accessible to determine the effectiveness of this Standard. Fuel spillage is not reported in accident reports; fire is not (or not unambiguously) reported.
    - -- There appears to be a moderate possibility of determining some aspects of the effectiveness of this Standard by (1) analyzing frequency of fires and fuel spillage from fire department data; (2) frequency of fire-related fatalities in automobile accidents; and (3) conducting a detailed survey of fuel system rupture in towaway accidents. It will probably be necessary to conduct all three of these investigations to obtain supportive corroboration among results.

The crucial element in evaluating all the Standards is the availability of sufficient data which describe all factors with an appreciable influence on the outcome of an accident. The second critical problem is that a "model" has to be used to separate the effect of the Standard from those of all the other critical factors. The types of data bases we considered were:

- Available automated data bases, such as state accident data tapes, the RSEP data base, the NCSS data base (available in early 1978), etc.

- Available data sources from which automated data bases could be readily constructed, such as data from fire departments on automobile fires and fuel spillage in accidents.

- New data collection efforts, such as data to essentially augment NCSS, mail surveys, special supplementary data to be collected by police when preparing standard automobile accident reports.

The "models" proposed for this analysis are not physical models, based on known theoretical or empirical relations. Rather, they are mathematical structures which are, in our opinion, sufficiently flexible to adequately describe the relations to be expected.

Various statistical techniques are proposed, primarily dependent on whether the data are continuous or whether all or some of them are categorical. The final selection, however, will be influenced by the characteristics of the actual data available, and by the investigator's preference for and experience with specific methods.

In addition to specifying methods to determine the effectiveness of the four Standards, procedures were outlined for selecting vehicle manufacturers, makes, models, etc., for a basis for analyzing the direct costs of meeting the Standards. Appropriate parts lists were also given.

To evaluate FMVSS 214 (Side Door Strength) we recommend that state mass accident data be analyzed to determine the effects of vehicle age on intrusion and injury, and also to delineate the effects of the gradual implementation of side door beams over the years 1969 through 1972. This analysis is secondary in importance to the detailed analysis. This information would be used to guide the more complex analysis of NCSS data, following its availability after March 1978. We expect that there will not be enough side impact cases in the NCSS data base to permit determination of effectiveness with regard to reduction of intrusion and injury severity, with an acceptable level of statistical significance. This initial analysis of NCSS data will provide an opportunity to develop and check out the statistical methodology and determine the amount of additional data to be collected. The critical element in this evaluation is whether the statistical models proposed will control for the complex interaction of factors in side collisions.

The evaluation of FMVSS 215 (Exterior Protection) is complicated by the fact that there is a lack of detailed data on low speed accidents in which there is little or no damage. We propose to get certain information from existing State Farm Insurance data and possibly from state mass accident data. We recommend a mail survey of car owners to get information on the frequency of low speed front/rear crashes, and we recommend that towtruck operators be used to collect information on the characteristics of vehicles involved in front/rear towaway accidents. No single data source is considered adequate to achieve the evaluation, but it is likely that evaluation will be possible if the several analyses are performed and used to reinforce each other. An analysis of HLDI data is discussed but because HLDI data have only total claim payment amounts and no information on type of crash and many other factors, one cannot expect much information will result.

There are very few data readily available for the evaluation of FMVSS 301 (Fuel System Integrity). To get information on fire-related fatalities, a number of sources would be used to build an analysis data base--FARS data, state mass accident files, state fatal accident files, state medical examiner's files, etc. We recommend that fire and police department records be used to determine the frequency of fire and fuel spillage in accidents. If new data were desired, cooperating police departments would be requested to obtain these data for fire/spillage cases, on special forms, while they prepare normal accident reports. We also recommend that a detailed data collection effort be undertaken concerning fuel system rupture in towaway accidents.

The evaluation of FMVSS 208 (Occupant Crash Protection) builds on the results of earlier studies, with regard to the effectiveness of lap and lap/shoulder belts. For determining belt effectiveness, we propose analysis of the combined NCSS/RSEP data base, after additions to the RSEP data have been completed, so that the effect of impact speed and possibly impact direction can be tested. For the passive system evaluations, we anticipate that new data will be obtained using accident "tracking" methods such as those presently performed by NHTSA, Volkswagen, etc. The critical problems in the evaluation will be the delay in getting sufficient data on passive restraint vehicle crashes.

With regard to the implementation of our suggested approaches, we conclude that it may take about $2 million and 1.5 to 4 years to perform the effectiveness evaluations of these four Standards. However, many more economical and less time-consuming programs of evaluation are possible.

If an integrated program approach is adopted, then we estimate that savings of about 14 percent could be achieved, assuming all work is performed by outside contractors.

In our cost estimates, CEM has taken a somewhat conservative position in terms of volume and type of new data to be acquired, based on the estimated needs to achieve "acceptable" levels of statistical significance. Once the preliminary analyses are actually performed, it may be determined that some data are not required (or are being obtained as part of other programs) and that certain analyses need not be performed.

Assuming that all work is contracted out, the costs to evaluate the Standards are shown in the table below. The table on the next page shows the characteristics of alternative implementation programs.

COSTS OF ALTERNATIVE IMPLEMENTATION PROGRAMS

FMVSS	Non-Integrated Program	Integrated Program	Uniform Cost Program
214 Side Door Strength	$ 479,000	$ 380,000 (21%)*	$ 479,000
215 Exterior Protection	$ 335,000	$ 295,000 (12%)	$ 335,000
301 Fuel System Integrity	$ 593,000	$ 470,000 (21%)	$ 593,000
208 Occupant Crash Protection	$ 601,000	$ 580,000 (3.5%)	$ 601,000
Total	$2,008,000	$1,725,000	$2,008,000

*Percent reduction, relative to the costs for the Non-Integrated Program.

CHARACTERISTICS OF ALTERNATIVE IMPLEMENTATION PROGRAMS

Item	Non-Integrated Program	Integrated Program	Uniform Cost Program
Criteria	● Each Standard is evaluated totally independently of the others. ● Evaluation of all Standards begins at same time, and is completed as quickly as feasible.	● Common data bases are evaluated for all Standards. ● Available data bases are analyzed first. ● Results of analyses are used to form base for next phase.	● Emphasis on equalizing annual funding. ● Each Standard is evaluted totally independently of the others.
Cost ($ 000)			
Year 1	$ 1,404	$ 556	$ 608
Year 2	391	616	619
Year 3	161	347	657
Year 4	47	176	124
Total	$ 2,008	$ 1,725	$ 2,008
Evaluation Schedule	Year 1 2 3 4	Year 1 2 3 4	Year 1 2 3 4

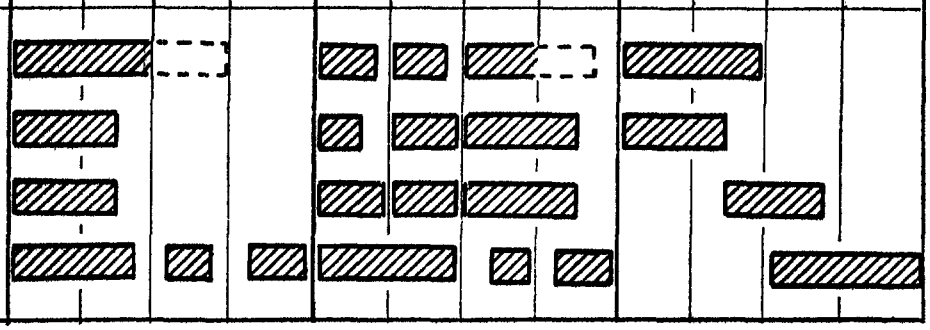

TABLE OF CONTENTS

Section	Title	Page
1.0	INTRODUCTION	1-1
1.1	Background	1-1
1.2	Objectives	1-1
1.3	Scope	1-1
1.4	Approach	1-2
1.5	Limitations	1-2
1.6	Outline of the Report	1-2
2.0	CONCLUSIONS AND RECOMMENDATIONS	2-1
2.1	Conclusions	2-1
2.2	Recommendations	2-8
3.0	REVIEW OF STANDARDS	3-1
3.1	Review of FMVSS 214 - Side Door Strength	3-1
3.2	Review of FMVSS 215 - Exterior Protection	3-5
3.3	Review of FMVSS 301 - Fuel System Integrity	3-9
3.4	Review of FMVSS 208 - Occupant Crash Protection	3-14
3.5	References for Section 3.0	3-19
4.0	APPROACHES TO EVALUATING THE STANDARDS	4-1
4.1	Approaches for Evaluating Individual Standards	4-2
4.2	Integrating the Evaluation Approaches	4-10
4.3	Cost Data	4-10
5.0	METHODOLOGIES FOR EVALUATING THE STANDARDS	5-1
5.1	Introduction	5-1
5.2	Sources of Data	5-1
5.3	Statistical Techniques	5-7
5.4	Hardware Cost Data Acquisition	5-21
5.5	References for Section 5.0	5-27
6.0	IMPLEMENTATION PLAN	6-1
6.1	Introduction	6-1
6.2	Early Results, Non-Integrated Plan	6-6
6.3	Integrated, Reduced Cost Plan	6-8
6.4	Early Results and Equalized Funding Plan	6-10
7.0	END PRODUCTS OF THIS STUDY	7-1

APPENDIX A: FEDERAL MOTOR VEHICLE SAFETY STANDARD NO. 214

APPENDIX B: FEDERAL MOTOR VEHICLE SAFETY STANDARD NO. 215

APPENDIX C: FEDERAL MOTOR VEHICLE SAFETY STANDARD NO. 301

APPENDIX D: FEDERAL MOTOR VEHICLE SAFETY STANDARD NO. 208

APPENDIX E: DISCUSSION OF STATISTICAL METHODS

APPENDIX F: INTRODUCTION DATES FOR SIDE DOOR REINFORCEMENT BEAMS

APPENDIX G: COST ESTIMATING METHODOLOGIES USED BY BLS, GAO, AND NHTSA

APPENDIX H. A STATISTICAL METHOD FOR COST DATA ACQUISITION: HOW TO SELECT THE MAKE AND MODEL PRODUCED BY A MANUFACTURER

APPENDIX I: FLOWCHARTS OF SELECTED ANALYSES

ACKNOWLEDGMENTS

The following CEM staff made major technical contributions to this study: Mr. John Ball, Mr. Gary Haas, Dr. Leonard Hafetz, Dr. Hans Joksch, and Mr. Joseph Reidy. Dr. Gaylord Northrop was Project Manager. Ms. Kayla Costenoble provided the graphics and considerable editorial input for all ten reports. Mrs. Teresa Mayer and Mrs. Carmela Miller typed the many versions of the preliminary and final study designs, and Ms. Marjorie Wallace was responsible for reproduction.

The CEM study team is also indebted to the contributions of the consultants: Drs. Uwe Koehn and Alan Gelfand of the University of Connecticut, and Mr. Robert Cromwell, P.E.

In addition, Mr. Warren LaHeist of the Office of Program Evaluation and the Contract Technical Monitor provided the study team with useful feedback on our progress. We would also like to thank Mr. Nelson Gordy and the NHTSA specialists for the four Federal Motor Vehicle Safety Standards and other NHTSA staff who provided assistance and reviewed the reports.

ABBREVIATIONS USED

ACRS	Air-Cushion Restraint System
AIS	Abbreviated Injury Scale
AMC	American Motors Corporation
ANACOVA	Analysis of Covariance
BEV	Barrier Equiavlent Velocity
BLS	Bureau of Labor Statistics
CALSPAN	Formerly Cornell Aeronautical Laboratories
CDC	Collision Deformation Classification
DOT	Department of Transportation
FARS	Fatal Accident Reporting System
FMVSS	Federal Motor Vehicle Safety Standard
GAO	General Accounting Office
GM	General Motors
GVWR	Gross Vehicle Weight Range
HLDI	Highway Loss Data Institute
HSRI	Highway Safety Research Institute
MPV	Multipurpose Vehicles
MVP	Motor Vehicle Programs
NASS	National Accident Sampling System
NCSS	National Crash Severity Study
NHTSA	National Highway Traffic Safety Administration
OIC	Occupant Injury Classification
RSEP	Restraint System Evaluation Program
SWRI	Southwest Research Institute
TAD	Traffic Accident Data Project Scale
USC	University of Southern California
VW	Volkswagen

1.0 INTRODUCTION

1.1 Background

The first Federal Motor Vehicle Safety Standards were issued by the National Highway Traffic Safety Administration in 1967 and 1968 for 1968 and 1969 model cars. An essential problem with these and subsequent Standards is to determine whether they are effective in achieving the purpose for which they were enacted.

This study was one of two independent studies funded by NHTSA's Office of Program Evaluation to develop methodologies to evaluate four Federal Motor Vehicle Safety Standards. The Standards selected for study were:

- FMVSS 214 - Side Door Strength
- FMVSS 215 - Exterior Protection
- FMVSS 301 - Fuel System Integrity
- FMVSS 208 - Occupant Crash Protection.

The Center for the Environment and Man, Inc. (CEM) completed this study in six months, producing ten reports and two briefings for NHTSA. (See Section 7.0 for a list of end products of this study.)

1.2 Objectives

The overall objectives of the study were to develop methodologies to evaluate the four FMVSS. The specific objectives to achieve the overall goal were to:

- Review background material on the four Standards.
- Study the feasibility of evaluating the effects of each of the four Standards.
- Develop a study design which would provide estimates of effects of a Standard given certain confidence limits and sample sizes.
- Prepare a detailed work plan to implement the study design.
- Describe in detail the procedures for processing the data and performing the evaluations.

1.3 Scope

The study was limited to six months,during which the study was broken up into four phases. The first phase was one month long and satisfied the first specific study objective--review background material. The second phase covered the next two months and the next two specific study objectives--feasibility and preliminary design of an evaluation procedure. A report was prepared for each of the four Standards. The third phase covered the next two and one-half months and addressed the final two specific objectives--final design and implementation plan for evaluating the effectiveness of the Standard. Four reports were prepared. The last phase covered the final half month of the study and focused on integrating the results of the previous nine reports and preparing the final report.

1.4 Approach

Our overall approach was to try to develop methods which would utilize existing data to provide some preliminary information on the effects of the Standard and to guide the collection and analysis of new data. The approach taken by CEM in developing the preliminary study designs involved intensive interaction between study team members. Special meetings between project staff and statistical consultants on the nature of existing and potential data evolved toward specific analytic tools--regression models with analysis of covariance, log-linear models, contingency table analysis, log-normal distributions, etc. After the preliminary study designs were developed, CEM refined them for actual implementation. Finally, after the final design and implementation plans for the individual Standards were finished, an effort was made to integrate the separate plans, and three alternative programs were developed.

1.5 Limitations

The task of developing a detailed plan for performing a complex statistical analysis of data is extremely difficult to do in the abstract. Many decisions are determined by the nature of the data and, in this case, actual testing of our proposed methods was precluded.

Secondly, some material was generated during the study which does not directly serve to evaluate the effectiveness of a Standard, but was desirable from the point of view of background. These are such items as the general discussion of statistical methods, the discussion of cost estimating methodologies, etc. In addition, some items were outlined in more detail for comprehensiveness, but they do not directly address the question of effectiveness. These are (1) the analysis of HLDI claim payment data becuase of the aggregation of all accidents, the dollar amounts, and the biased nature of the information, and (2) the restraint system usage survey, which would only provide information on the differences between usage in the general driver populaion *vs.* the accident population.

1.6 Outline of the Report

Section 2 presents conclusions and recommendations. Section 3 reviews the Standards. Section 4 discusses the approaches to evaluating the Standards. Section 5 deals with the specific methodologies which are suggested to analyze the Standards. Section 6 presents individual and integrated implementation plans. Section 7 lists the end products generated during this study.

The appendices contain copies of the latest version of the four Standards, a general discussion of statistical methods, some specific discussion of NHTSA, General Accounting Office, and Bureau of Labor Statistics costing methodologies, and other supporting information.

2.0 CONCLUSIONS AND RECOMMENDATIONS

2.1 Conclusions

We conclude that it may take about $2 million and one and a half to four years to perform the effectiveness evaluation of the four Standards. Generally, we feel that the likelihood of successfully estimating the effectiveness of the Standards are, in order:

- FMVSS 208 - Occupant Crash Protection
  - Previous studies have shown the effectiveness of lap and lap/shoulder belts. The suggested analysis will extend previous research to include the effect of impact speed and direction.
  - The effectiveness of passive restraint systems has been demonstrated in test situations. The suggested analysis will establish their effectiveness under field conditions on a large scale.

- FMVSS 215 - Exterior Protection
  - Given that tests have demonstrated the effectiveness of the 5 mph bumpers under certain conditions, the proposed analyses, when considered together, will probably be sufficient to reveal its effect in real accident conditions.

- FMVSS 214 - Side Door Strength
  - Existing data bases are likely to be inadequate to delineate the effectiveness of side door beams with a satisfactory level of confidence. The collection of additional detailed data which is targeted for specific categories may provide a sufficient data sample size to estimate the effectiveness.

- FMVSS 301 - Fuel System Integrity
  - We know of no existing data which are readily accessible to determine the effectiveness of this Standard. The frequency of vehicle fire or fuel spillage due to accidents is low. Special data collection would be needed to evaluate the Standard.

Table 2-1 below gives a complete overview of our conclusions on how the Standards should be evaluated.

TABLE 2-1: SUMMARY OF CONCLUSIONS

Items	FMVSS 214: Side Door Strength	FMVSS 215: Exterior Protection
Recommended Approach	• Perform detailed statistical analyses of NCSS data to determine: - Initial estimates of effectiveness. - Significance of initial estimates. - Need for additional new data, if any. • Collect additional data, as necessary, to achieve desired levels of significance of results, and repeat the detailed statistical analyses. • Conduct auxiliary analysis of existing mass accident data to determine: - Vehicle age effects. - Effects of gradual implementation of side beams in 1969-1972 model year cars. • Collect and analyze direct costs of side door beam hardware required to meet the Standard, using a statistical sampling method.	• Analyze existing data: - State Farm Mutual Insurance Company -- Use auto accident claim data to determine the frequency of bumper-related part damage. - Mass accident data -- Determine if over time there has been a shift in vehicle damage away from bumper areas. - Highway Loss Data Institute (HLDI) -- Determine if there has been a shift in average claim payments, over time, due to the Standard. • Collect and analyze new data: - Car owner survey -- Determine the difference in frequency of no-damage, unreported damage low speed accidents for pre-and post-Standard cars. - Towaway survey -- Collect data from tow truck operators on the frequency of towing in front/rear accidents. • Collect and analyze direct costs of bumper-related hardware required to meet the Standard, using a statistical sampling method.
Measures of Effectiveness	• Reduction in intrusion due to side impact. • Reduction in injury severity. • Shift in bodily injury location.	• Reduction of frequency of damage to safety-related and bumper-related parts. • Reduction in car accident claim payments. • Reduction of towing frequency in front/rear accidents.

FMVSS 301: Fuel System Integrity	FMVSS 208: Occupant Crash Protection
• Collect and analyze data on fuel system rupture in towaway accidents (new data collections). • Analyze the frequency of fire/fuel spillage accidents using existing fire/police department data (or possibly data newly-collected by police agencies). • Analyze the frequency of fire-related motor vehicle fatalities using data from Fatal Accident Reporting System (FARS) and state fatal accidents files. • Collect and analyze direct costs of fuel system hardware required to meet the Standard, using a statistical sampling method.	• Use NCSS and RSEP data bases to analyze the effect of impact speed and (possibly) direction on the effectiveness of lap and lap-shoulder belts. • Use existing and new accident data on vehicles equipped with passive restraint devices to evaluate their effectiveness. Perform the analysis in stages as significant data are collected by the tracking program. • Conduct a seat belt usage survey to allow determination of restraint system use for the entire car driving population. • Collect and analyze direct costs of restraint system hardware required to meet the Standard, using a statistical sampling method.
• Reduction of frequency of fuel system rupture in towaway accidents. • Reduction of frequency of fire or fuel spillage in all accidents. • Reduction of fire-related motor vehicle fatalities.	• Reduction in injury severity.

TABLE 2-1: SUMMARY OF CONCLUSIONS (Cont.)

Items	FMVSS 214: Side Door Strength	FMVSS 215: Exterior Protection
Availability of Data to Estimate Measures of Effectiveness	• Available data bases: - Mass accident data -- Texas -- North Carolina - NCSS • New data collection: - Needed to supplement NCSS data, if level of statistical significance of results obtainable with NCSS data is too low. - Possibly need more detailed information on passenger compartment intrusion than is available in NCSS.	• Available data bases: - Mass accident data -- Texas -- New York -- North Carolina -- Others - State Farm repair and replacement data. - HLDI claim payments data. • New data collection: - Car owner survey of low speed accidents. - Towaway survey to determine frequency of towing in front/rear accidents.
Statistical Analysis Methods to be Used	• Mass accident data: - Contingency table analysis. • NCSS data: - Log-linear model, with Chi-Square goodness-of-fit analysis (all categorical variables). - Regression analysis with analysis of covariance models (some continuous and some categorical variables). - Descriptive index method used to delineate effectiveness and provide a basis of comparison of results from the two methods. • Hardware cost data: - Latin square experimental design to analyze manufacturer, market class, body type stratifications.	• Mass accident data: - Contingency table analysis. • State Farm repair and replacement data: - Contingency table analysis. • Car owner survey data: - Contingency table analysis. • Towaway survey data: - Contingency table analysis. • HLDI data: - Comparison of distribution of pre- and post-Standard car payment claims, using truncated log-normal distribution theory. • Hardware cost data: - Experimental design with two replications to analyze manufacturer, market class stratifications.

FMVSS 301: Fuel System Integrity	FMVSS 208: Occupant Crash Protection
• Available data bases: - Fatal Accident Reporting System (FARS) • Data sources for development of data bases: - State mass accident files and other state fatality files. - Fire department records on vehicle fires and fuel spillage. • New data collection: - Frequency of fuel system rupture in towaway accidents. - (Possibly) new data on fire and fuel spillage collected by police in vehicle accident investigations.	• Available data bases: - NCSS - RSEP • Data sources for development of data bases: - Tracking programs for passive restraint system vehicles. -- NHTSA -- Allstate Insurance -- General Motors -- Volkswagen • New data collection: - Restraint system usage survey. - Additional data from tracking programs for passive restraint vehicles.
• Fuel system rupture data: - Contingency table analysis for vehicles with no observable aging effects. - Trend analysis to determine: -- Aging effects. -- Occurrence of rupture where aging effects are discerned. • Fire and fuel spillage data: - Contingency table analysis. - Likelihood ratio test. • Fire-related fatality data: - Contingency table analysis. - Likelihood ratio test. • Hardware cost data: - Experimental design with two replications to analyze manufacturer, market class stratifications.	• RSEP/NCSS data: - Log-linear model, with Chi-squared goodness-of-fit analysis (all categorical variables). - Regression analysis with analysis of covariance models (some continuous and some categorical variables). - Descriptive index method use to delineate effectiveness and provide a basis of comparison of results from the two methods. • Passive restraint system data: - Same as above. • Restraint system usage survey data: - Tabulations. - Estimates of standard errors. • Hardware cost data: - Lap and lap/shoulder belts --Balanced incomplete block design to analyze manufacturer, seat configuration, inertia reel stratifications. - Passive systems --Consult General Motors and Volkswagen.

TABLE 2-1: SUMMARY OF CONCLUSIONS (Cont.)

Items	FMVSS 214: Side Door Strength	FMVSS 215: Exterior Protection
Resources Required (Special Needs)	• Statistical/computer modeling capabilities. • Detailed accident investigation capabilities.	• Data processing capabilities. • Survey experience.
Costs		
• Non-Integrated Plan		
- Total Cost ($ 2,008,000)	$ 479,000	$ 335,000
- Person-Years	9.0	4.6
- Computer Costs	$ 19,000	$ 10,000
- Other Costs	$ 10,000	$ 95,000
- Duration (months)	36	16
• Integrated Plan		
- Total Cost ($ 1,725,000)	$ 380,000	$ 295,000
- Duration (months)	45	40
• Time Equalized Funding Plan		
- Total Cost ($ 2,008,000)	$ 479,000	$ 335,000
- Duration (months)	24	16

FMVSS 301: Fuel System Integrity	FMVSS 208: Occupant Crash Protection
• Technical field data collection capabilities. • Experience in hard copy information retrieval.	• Statistical/computer modeling capabilities. • Survey experience.
$ 593,000	$ 601,000
11.0	10.5
$ 10,000	$ 10,000
$ 33,000	$ 66,000
18	48
$ 470,000	$ 580,000
42	48
$ 593,000	$ 601,000
18	24

2.2 Recommendations

It is not possible for CEM to make an unqualified, unique recommendation concerning the implementation plan to be followed for evaluating the effectiveness and hardware costs of the four Standards considered in this study. This is primarily due to the potential interactive effects which data collection efforts and results obtained in the Standards evaluation program could have with other research and data collection programs currently being conducted or planned by NHTSA. CEM is not privy to NHTSA's plans for the next several years in traffic safety research and data collection programs and, hence, cannot judge what would be an optimum interface between the Standards evaluation program and other studies.

With full consideration of the above statements, the following qualified recommendations can be made.

The Integrated Plan is recommended if one is concerned with maximizing the interactive relationships among tasks and capitalizing on commonality of features concerning data bases, collection efforts and analysis approaches. This implementation plan permits cost savings and schedules tasks according to certain logical premises. The majority of tasks scheduled during the first year require only existing data. Most tasks which depend upon new data collection or extensive data acquisition are scheduled to start in the second or third year. Work proceeds on all Standards throughout the entire four years of the project. While intermediate results are available at various times during the first three years of the project, final definitive results on the evaluation of each of the Standards are not available until the fourth year of the project.

The Time Equalized Funding Plan is recommended if one is concerned with obtaining definitive final results on some Standards during the first two years and at the same time equalizing the funding level over the first three years of the project. The final evaluation results on FMVSS 214 and FMVSS 215 are obtained within the first two years, but during this time no work at all is carried out on the FMVSS 208 evaluation and the evaluation of FMVSS 301 is not started until the second year. The work concentration by year and Standard is:

- Year 1: FMVSS 215 and FMVSS 214
- Year 2: FMVSS 214 and FMVSS 301
- Year 3: FMVSS 301 and FMVSS 208
- Year 4: FMVSS 208.

The Non-Integrated Plan or minor variations of this plan might be desirable if one wants to obtain as many intermediate and final results on the evaluation of the four Standards as quickly as possible and if one is willing to budget a highly skewed distribution of the funding--with the major portion of funds being expended in the first one to two years. This implementation plan minimizes time-sequencing of tasks and, hence, does not permit much interactive use of results and analyses among tasks.

3.0 REVIEW OF STANDARDS

This section reviews and summarizes the essential background information which must be considered in developing a plan to evaluate the effectiveness of each of four selected Federal Motor Vehicle Safety Standards (FMVSS). The four selected FMVSS which have been examined are:

- FMVSS 214 - Side Door Strength
- FMVSS 215 - Exterior Protection
- FMVSS 301 - Fuel System Integrity
- FMVSS 208 - Occupant Crash Protection

Each Standard is reviewed in a separate subsection in the above-listed order.

3.1 Review of FMVSS 214 - Side Door Strength

The rationale for issuing this Standard was the observation that occupant injury severity in side-door impact crashes increased with the depth of intrusion. To reduce this intrusion, and thereby injury severity, strengthening side doors was suggested. Beginning with the 1969 model year, many car models were equipped with side door guard beams. The Standard became effective on January 1, 1973, and has not been amended since then.

Purpose of FMVSS 214

- The specific purpose is to set strength requirements for side doors.
- The general purpose is to minimize the safety hazard caused by intrusion into the passenger compartment in a side impact accident.

General Requirements of FMVSS 214

Any passenger car side door that can be used for occupant egress must meet three crush resistance tests, using a specified test device:

- Initial Crush Resistance of not less than 2,250 lb.
- Intermediate Crush Resistance of not less than 3,500 lb.
- Peak Crush Resistance of not less than 7,000 lb, or two times the curb weight of the vehicle, whichever is less.

Measures of Effectiveness

The specifications of the Standard are given in terms of a static test. Conceptual measures of its real world performance are the intrusions occurring in actual crashes, resulting from the dynamic interaction of two vehicles, or a vehicle with an object. Conceptual measures of its ultimate effectiveness are the expected injury severity in a side door impact crash, or the probability of an injury's exceeding a certain level of severity. Both intrusion and injury severity are dependent on many pre-crash and crash phase factors. Therefore, it appears conceptually impossible to directly evaluate the effect of reduced intrusion upon injury reduction.

The ultimate performance measure of FMVSS 214 is its effect on occupant injury. To do an adequate statistical analysis of this effect, a specific quantitative measure of injury must be available. Unless such a reliable measure is available, detecting shifts in injury severity resulting from the imposition of FMVSS 214 will be nearly impossible. The requirement for a reliable injury severity measure could be relaxed only if the primary effect of the Standard was a shift in injury severity at the highest end of the scale (e.g., from fatal to seriously injured or from seriously injured to minor). Since such a shift is not expected to occur, a comprehensive injury scale is necessary.

Most existing accident data bases rely on police accident reports for determination of injury severity. This usually consists of a five point scale of K, A, B, C, O, where:

- K = Killed
- A = Serious visible injury
- B = Minor visible injury
- C = No visible injury
- O = No injury.

Though these injury levels are defined more precisely than indicated, definitions may vary between jurisdictions, and have changed over time. The greatest practical drawback of this scale is that the assignment is made at the scene of an accident by a police officer, on the basis of only a few visible indications. The greatest conceptual problem is that the "A" category tends to cover a very wide range of injury severity; in effect, it covers the entire range of injuries which are of primary concern for evaluating FMVSS 214. A more satisfactory scale is the Abbreviated Injury Scale (AIS), which is available in some comprehensive data bases (NASS, NCSS)*. It is a seven point scale, 0 through 6, where:

- 0 = No injury
- 1 = Minor
- 2 = Moderate
- 3 = Severe (not life-threatening)
- 4 = Serious (life-threatening, survival probable)
- 5 = Critical (survival uncertain)
- 6 = Maximum (currently untreatable)

The AIS is precisely defined by a dictionary defining specific injuries for six body regions. In the case of multiple injuries, medical judgment is used to assign an overall AIS level. One drawback of the AIS scale is that it essentially expresses the threat to survival, but not other aspects of the injury, such as degree or kind of resulting disability.

A more detailed description of injury severity is the Occupant Injury Classification (OIC). It is the best quantitative measure of injury severity available for evaluating FMVSS 214. It is available in a few existing data

---

*NASS = National Accident Sampling System
NCSS = National Crash Severity Study

bases (RSEP, NCSS).* The OIC is a five character code, one of which is the AIS. The other four characters represent body region, aspect, lesion, and system/organ. The OIC would provide not only the most reliable measure for detecting shifts in injury severity, but it also would make it possible to distinguish between intrusion-related and non-intrusion-related injuries.

The quantitative measure of FMVSS 214 performance is passenger compartment intrusion. The collision code used by most existing data bases is the Traffic Accident Data Project Scale (TAD). It consists of an impact location code and a damage rating from 1 to 6. The TAD scale does not sufficiently define the location of passenger compartment impacts for the purpose of evaluating FMVSS 214. A more comprehensive collision scale is the Collision Deformation Classification (CDC) which is available in the RSEP and NCSS data bases. The location of the impact is quite precisely defined by the CDC, but the extent of deformation is not. The depth of intrusion is not directly defined by the CDC because of varying door widths and interior design. However, it may be derived by using the dimensions of the car.

Means of Complying with the Standard

FMVSS 214 was introduced in October 1970 with an effective date of January 1, 1973. The manufacturers had been working on side door guard rails since at least 1968.** Various proposals were made as to the structural means of complying with the Standard, including the use of beams, structural foam, and honeycombed members. A review of present vehicle door constructions shows that the method of compliance is primarily the use of formed or channel-shaped metal beams of stampings positioned near or against the inner side of the outer door sheet metal surface†, thereby providing the greatest resistance to intrusion for the prescribed force application of FMVSS 214. Attachment of the reinforcing beams consists of spot or seam welds to the vertical door frame members on the hinge and latch sides of the doors. This method of reinforcing the doors is probably universal in the thin structured doors of small cars. Some of the larger vehicles, having a large door thickness between inner and outer panels, appear to accomplish the strength requirements by incorporating heavy metal frames within the door which are functional in supporting the window regulators and latch mechanisms, thereby reducing the cost of additional structure for the sole purpose of increasing door strength.

The Standard requires loading for 18 inches of crush. After about 6 inches of deformation, the reinforcement side beam has lost its ability to resist additional load as a beam. Its resistance to side crush becomes a function of the tensile strength of the beam concentrated at the end attachments. Thus, the strength of the door frame and hinge attachments become the critical design features for intrusion of more than about six inches.

---

*RSEP = Restraint Systems Evaluation Project.

**Hedeen, C. E. and D. D. Campbell (Fisher Body Division, General Motors Corp.), *Side Impact Structures*. Society of Automotive Engineers, 1969.

†The domestic manufacturers use channel beams with corrugated logitudinal reinforcing and sometimes center plate reinforcement. Volkswagen has used a simple channel beam on their newer models; however, in the VW Beetle the beam flanges narrow at the connection point, which may reduce their effectiveness in off-center or angle side door collisions.

Primary and Secondary Effects of Compliance

Side door beams significantly reduce occupant compartment intrusion in low speed impacts. From physical analyses it appears that strengthened door construction has increased effectiveness of occupant protection in the case where vehicles strike a glancing blow into the center door span, due to the low velocity normal to the door surface at a given impact speed and the likelihood of deflecting the striking vehicle at relatively low impact speeds (below 15 mph). This could prevent vehicle entanglement and loss of driver control which might cause more serious secondary collisions. Primary factors in considering the overall protection afforded by improved side door strength are (1) the relative weights of the vehicles involved in a glancing collision; (2) the relative velocity of the striking vehicles; (3) the angle of impact and the front corner configuration of the striking vehicle; and (4) the vertical location of the door reinforcement in the struck vehicle.

The most important unintended secondary effect is that the stiffening of the side door increases the acceleration forces on occupants in light-weight vehicles struck at relatively low speeds. Other possible secondary effects are less certain. In sideswipes, the side door beam may deflect the striking vehicle rather than absorbing the kinetic energy and slowing the striking vehicle. In certain types of collisions, it is possible that the beam could come free and become an injury-producing object. Also, the addition of side beams should enhance the integrity of the compartment in higher speed frontal collisions.

Real-World Performance of the Standard

The major factor affecting the relation between FMVSS 214 and real-world crashes is the static nature of the impact test. This limits the representativeness of the test to a narrowly defined set of crash configurations. There are many variables involved which influence occupant injury, but the assumption is that the test specifications delineate the critical ones. Thus, if the test specifications of the Standard are met, then a significant improvement in occupant crash protection is provided. The evaluation methodology must test this assumption.

FMVSS 214 requirements are based on assumed relation between depth of intrusion and occupant injury. Injury may be caused by the vehicle door intruding upon the occupant as well as by the occupant's striking the door and/or other parts of the car, or other occupants. Intrusion of the door is dependent on the force of the impact, as is the force with which the occupant hits elements of the vehicle interior. It is not directly obvious to what extent the observed correlation between intrusion and injury reflects a causal effect of intrusion rather than their both being a result of the common force of impact. Therefore, it is not sufficient to restrict the evaluation to studying the depth of intrusion. It is also necessary to study injury reduction with respect to all relevant pre-crash and crash factors.

Some of the relevant factors which might be considered are: vehicle loading, road conditions, duration and degree of braking and/or rolling, and energy absorbed in vehicle rotation after impact. Injuries may be related to vehicle seating arrangements, occupant distance from the door, the shape of the interior surfaces, and the number of passengers seated adjacent to one another. The obvious factors of vehicle weights, relative velocities, body types, and occupant age, size/weight, and restraint-use must be considered.

3.2 Review of FMVSS 215 - Exterior Protection

This Standard has changed considerably since it first become effective on September 1, 1972. The increasingly stringent crash test requirements created considerable difficulty and there were numerous modifications and exemptions, especially for specialty cars (sports, vintage, etc.). In March 1976 a new Bumper Standard (Part 581 of Title 49) was issued under the authority of Title I of the Motor Vehicle Information and Cost Savings Act. Manufacturers presently can comply under either FMVSS 215 or Part 581; however, beginning September 1, 1978, Part 581 is mandatory, with its broader damageability standards. Table 3-1 below shows the major changes to FMVSS 215 as they apply to vehicle model years.

TABLE 3-1

APPLICABILITY OF THE STANDARD BY MODEL YEAR*

Model Year	Exterior Protection Standard Requirements
pre-1973	• No requirements.
1973	• 5 mph front; 2.5 mph rear barrier crash.
1974	• Horizontal pendulum test added over 115" wheelbase. • Rear barrier crash increased to 5 mph.
1975	• Number of horizontal pendulum impacts reduced to 2 front and rear. • Horizontal pendulum test for all cars.
1976	• Corner impact test for cars less than 120" wheelbase.
1977	• Corner impact test for all cars more than 120" wheelbase.
1979	• FMVSS 215 superseded by Part 581 - Bumper Standard, which increases damageability standards.

*Some changes in the Standard may have gone into effect after the start of a model year so that in that year some models may not have satisfied the Standard.

Purpose of FMVSS 215

- The specific purpose is to establish requirements for impact resistance and the configuration of front and rear bumpers.
- The general purpose is to prevent low-speed accidents from impairing safe operation of the vehicle and to reduce the frequency of override and underride in higher speed collisions.

  [The new Bumper Standard (Part 581) deals with reducing all physical damage to the front and rear of the vehicle.]

General Requirements of FMVSS 215

The current Standard requires both pendulum and barrier crash tests. Earlier versions (see Table 3-1) exempted certain vehicles or had lower criteria. Generally, the test conditions are:

- Two pendulum tests
  - The longitudinal impact test consists of impacting the front and rear bumper surface two times each at 5 mph with an impacting mass equal to the weight of the vehicle.
  - The corner impact test consists of impacting the front and rear corner twice each at 3 mph at an angle of 60 degrees from the longitudinal centerline of the vehicle.

- Barrier test
  - Two fixed barrier collisions with the vehicle traveling at 5 mph, once forward, once in reverse.

Generally, the protective criteria are that safety equipment not be impaired; hood, trunk and doors operate normally; there are no leaks from fuel, cooling, exhaust or energy-absorbing systems; vehicle mechanical systems remain normal; and that the test device impact only on its impact ridge.

Measures of Effectiveness

The primary purpose of the bumper Standard FMVSS 215/Part 581 is to prevent low speed collisions from impairing the safe operation of vehicle systems and to reduce the frequency of override or underride in higher speed collisions. As a consequence, the cost of repairs to vehicles as a result of low speed collisions is expected to be reduced and economic advantages to the consumer would be realized directly through less cost and inconvenience of necessary repairs, and indirectly through reduced cost of insurance. Reduced damage in highway accidents could reduce traffic tie-ups and,hence, result in fewer secondary accidents.

Performance measures used to insure that safety-related items are not rendered inoperable include pendulum and barrier impact testing of the bumper system. The safety-related requirements are:

- Reflectors not be cracked, and lamps (excepting license plate lights) not be damaged beyond adjustability.
- Hood, trunk and doors operate in a normal manner.
- Fuel and cooling systems develop no leaks or constrictions and caps and seals remain unaffected.
- Exhaust systems develop no leaks or constrictions.
- The propulsion, suspension, steering and braking operate in a normal manner.
- The impact device should not strike the vehicle <u>except</u> along a specified impact ridge.
- The energy-absorbing impact device should not suffer any loss of gas or liquid.

<u>Means of Complying with the Standard</u>

FMVSS 215 for front and rear bumpers has undergone considerable revision since it first became effective on September 1, 1972. The elimination of reduction of damage resulting from low-speed impacts requires the application of the basic principle of energy absorption. A variety of approaches and methodologies has been suggested and/or utilized including various torsional systems, mechanical systems, or energy-absorbing materials. The energy-absorbing materials used are springs, pneumatic shock absorbers, plastic foams, etc.

A listing of the major means for compliance that have been used or suggested include the following [1, 2, 3, 4].

- Full-width steel reinforcement behind a bumper attached to rubber block which is energy-absorbing. *(Chrysler)*
- Steel beams on both sides of vehicle support steel bumper and are connected to energy-absorbing devices consisting of prestressed rubber (slabs which stretch or shear upon impact). *(Ford)*
- U-shaped steel bumper which contains energy-absorbing cellular plastic blocks in the interior of the bumper. *(Saab)*
- Reinforced steel bumpers with external rubber guards attached to energy-absorbing hydraulic/pneumatic cylinders on either side of the car. *(General Motors)*
- Soft-faced front end of elastomeric material such as urethane which is energy-absorbent. *(General Motors)*
- Steel cable bumper decelerator which rides freely over car frame extentions and alters the direction of energy absorption from longitudinal to transverse.

Systems designed to meet the Standard can be classified as either (a) returnable: spring, spring and shock absorber (hydraulic), state-of-the-art bumper material (metallurgy) with or without any combination of the above, elastomeric bumper materials with or without the above, or (b) non-returnable: shock

absorber types which are either rechargeable or reset by hand, or deformable energy absorbers which must be replaced after collision to bring them to their original manufactured state. The most frequently used compliance method in recent model years has been the returnable energy-absorbing hydraulic/pneumatic cylinder.

Primary and Secondary Effects of Compliance

The primary effect of the Standard is to reduce or eliminate vehicle damage and prevent impairment to the safe operation of the vehicle for the following low speed (5 mph or less) crash situations.

- Front end, rear end and front and rear angular collisions with fixed objects at least the height of the bumper.
- Head-on collisions between vehicles with equal bumper heights on a surface allowing them to be level with respect to each other (except for very large differences in mass of two vehicles).
- Collisions where bumper mismatch does not result when the rear colliding vehicle is pitched due to braking, crown of road, and/or inclining or declining grade.
- Angular collisions between vehicles (front-to-front, rear-to-rear and front-to-rear) that are level with respect to each other, within a maximum angle.

A number of potentially significant secondary effects can be noted. The new bumper designs have more complicated interfaces with other systems such as the radiator, grille and lights. In higher speed crash situations not covered by the Standard, the cost of damage sustained to the bumper and interface components may be higher. Because of the greater protrusion of some new bumpers which meet the Standard, the complying vehicle may cause greater damage in higher speed collisions.

Real-World Performance of the Standard

Comparison of the desired effects of Standard FMVSS 215 indicate the following areas to be considered in actual vehicle operating conditions.

- The desired bumper match may not occur under the conditions of uneven roadways; particularly on crowned roads at intersections, and also when there is considerable vehicle pitch due to weight transfer caused by acceleration and braking. Also, a dangerous load mismatch may occur when a bumper end strikes another bumper surface at an angle causing high unit load force and local deformation.
- The strengthened bumper may cause more severe penetration into the side and door structure of other vehicles at both low and high speed side impacts.

- Five mile per hour impact damage may result in extensive vehicle structural damage depending on bumper configuration and attachment methods employed, even though safety-related items are undamaged. This most probably might occur on unibody type vehicles having reduced strength capability at the bumper bracket attachment locations, as in smaller cars with relatively light frames.
- With the wrap-around projecting bumpers, "hooking" a front and rear bumper becomes a hazard.

3.3 Review of FMVSS 301 - Fuel System Integrity

Since its introduction in 1968, this Standard has been modified several times, increasing the difficulty of meeting the test criteria. For example, the static rollover test was first proposed in 1973 for the 1976 models; that test requirement was temporarily suspended, while new test criteria were considered. The 1976 models had to meet the frontal crash and static rollover requirements. The present 1977 models must meet front, side, and rear barrier crashes as well as static rollovers. Vehicles in the 6,000 and 10,000 pound GVWR* (typically multipurpose vehicles such as vans or pickups) must meet the passenger car requirements by the 1978 model year. Table 3-2 describes the applicability of the Standard by model year.

Purpose of FMVSS 301

- The specific purpose is to establish requirements for the integrity of motor vehicle systems.
- The general purpose is to reduce deaths and injuries occurring from fires resulting from fuel spillage in motor vehicle accidents [5].

General Requirements of FMVSS 301

- In the barrier tests for fuel spillage, the vehicle must not lose more than:
  - One ounce by weight during the crash.
  - Five ounces during the next five minutes after the crash.
  - One ounce in any one minute period during the next twenty-five minutes.
- In the rollover test, fuel spillage is limited to five ounces in the first five minutes at any 90° increment or more, and is limited to no more than one ounce during any subsequent one minute period while the vehicle is at rest.
- Currently, passenger cars (1977 model) must undergo 30 mph front barrier and rear moving barrier crashes, a 20 mph lateral moving barrier crash and a static rollover.

---

*Gross Vehicle Weight Range.

TABLE 3-2

APPLICABILITY OF THE STANDARD BY MODEL YEAR

Model Year	Fuel System Integrity Requirements Set by FMVSS 301*
Pre-1968	• No requirements
1968	• Frontal barrier crash (30 mph) and limited leakage from fuel tank, filler pipes, and fuel tank connections during impact (one ounce) and after impact (one ounce per minute). Effective January 1, 1968.
1971	• In response to air pollution control legislation, auto manufacturers installed evaporative emission-control systems increasing fuel system elements.
1976	• Passenger cars must meet front barrier impact and static rollover test.
1977	• Side and rear barrier impact tests are added to passenger car requirements. • Other vehicles up to 6,000 pounds GVWR must meet 1976 passenger car conditions plus the rear impact test. • 6,000 to 10,000 pound GVWR vehicles must meet only the front barrier test.
1978	• All vehicles up to 10,000 pounds GVWR must meet the 1977 passenger car requirements.

*The 1976 modifications were announced in 1973 and manufacturers had considerable lead time to introduce improvements in pre-1976 models in anticipation of the effective date of the Standard.

- The 1977 model year multipurpose vehicles of less than 6,000 lb GVWR must undergo only the perpendicular front barrier crash, the rear moving barrier crash, and the static rollover. The 1978 models must meet the current passenger car criteria.
- The 1977 multipurpose vehicles of between 6,000 and 10,000 lb GVWR must meet the perpendicular front barrier crash criteria. The 1978 models must meet the current passenger car criteria.
- School buses, which are 10,000 lb GVWR or greater, have to meet a special moving contoured-barrier crash test starting July 15, 1976. The evaluation of the effectiveness of this Standard with regard to these school buses is not within the scope of this project.

The static rollover test occurs after an impact test. The vehicle is rotated about its longitudinal axis in 90° increments. Each incremental rotation should take between one and three minutes and the vehicle should remain in each position for five minutes.

Measures of Effectiveness

There seems to be no direct, quantitative scalar measure which relates accident conditions to the effectiveness of this Standard. Using the Abbreviated Injury Scale (AIS), police or accident investigators would have to classify burns and asphyxiations separately from other injuries. For instance, AID-1 includes all first degree burns or some second degree burns. It also applies to minor aches and sprains. An occupant may suffer slight (AIS-1) bruns and more severe (AIS-2) bodily injuries. However, normally only one injury (the most serious) classification is designated for each victim in a crash. This would decrease the effectiveness of using existing AIS data with regard to burns. Use of vehicle deformation or any other such impact measure (vehicle speed, direction and location) adds the factor of "indirect" collisions--that is, the initial impact causes some other part of the vehicle to impact and damage the fuel system.

The most promising approach to evaluating FMVSS 301 may be to combine various effectiveness measures such as: fire-caused deaths in auto collisions as a percent of all fatal accidents, or the rate of fuel system ruptures in the towaway accident population. Neither measure alone is likely to directly reflect the effect of the Standard. Deaths due to fire in auto accidents may increase (or decrease) because of better (or worse) escape conditions, materials giving off toxic fumes, etc.* Ruptured fuel systems in towaway accidents may represent a biased sample of accidents and the number of fires may increase or decrease, depending on the ignition sources. Also, there is the further possibility that the fire (and subsequent injury or death) may not be due to the occupant's vehicle but to some other vehicle. For example, cars striking exposed fuel tanks on trucks may result in fire and injury in the striking vehicle.

Means of Complying with the Standard

A variety of approaches, most of which can be implemented in concert, have been suggested for compliance. The means of compliance are briefly listed below and are discussed in References 6, 7, and 8.

- Fuel Tank Location: For a front-engine vehicle the most protective location would be the area between the rear wheels above the rear axle and below the rear window. The regions close to the rear fender or either side of the car are more vulnerable to rear end or side impacts. (Mercedes and the VW Dasher have protected or interior fuel tanks, as do many U. S. station wagons.)

*The plastic materials being used to lighten new cars increase the available combustible material and burn at an intense heat, thus increasing the hazard to occupants, once a fire is initiated.

- Fuel Tank Material and Shape: Horizontally aligned rectangular flat tank configurations with smoothed contours and corners offer the least hazardous design. The strength of tank walls should take into account fuel capacity and size of car. Alternatives to rigid metal construction include plastic fuel tanks and expandable tanks with corrugated folds which permit altering the geometric shape of the tank [6].
- Fuel Tank Anchorage: The straps and anchor points for the tank must be sufficiently strong to withstand extreme distortion and inertial forces associated with impact.
- Filler System: In general, the protrusion of the filler neck from the tank should be as short as possible, consistent with the location of the tank. The major change that manufacturers made to initially satisfy the Standard was to upgrade the filler tank cap. Self-sealing breakaway type fittings have been suggested for the filler system and the other outlets from the fuel tank. The vapor vents have float valves to prevent fuel leakage but these could be defeated in rollover accidents.
- Vent Line and Fuel Line: As mentioned above, it has been suggested that all fittings to the fuel tank be of a self-sealing breakaway type. In addition, the location, length, flexibility and strength of the vent and fuel lines all affect the possibility of rupture and fuel leakage.
- Carburetor/Fuel Pump/Fuel Filter Locations: The location of these components in the front end relative to other systems will influence successful compliance with front or lateral moving side barrier tests.

Primary and Secondary Effects of Compliance

"Even a cursory review of contemporary designs shows that fuel systems have not been considered as a single, integrated, rupture-resistant system, but as a set of components adapted to a particular vehicle after its basic design has been completed" [9]. The major effects of the Standard have been the repositioning of the fuel tanks and filler spouts and the upgrading of the fuel filler cap. The repositioning of the tank might have some secondary effect on the performance of motor vehicles, because it changes the weight distribution. However, this would be hardly perceptible and probably beneficial. Repositioning the fuel tank to more interior parts of the car would increase the hazards to the occupants in the case of a fire (though the probability of fire and leakage may be reduced). Thus, most design change recommendations include fuel tank repositioning and introduction of a fire wall for protection of rear seat passengers.

Another secondary effect, at least partially ascribable to the Standard, is the increased complexity of the carburetor.* The system has become more enclosed and more difficult to service, partly to prevent leakage from the carburetor during the rollover test.

For Multipurpose Vehicles (MPVs), there has been rapid design development to meet the Standard. With the greater weight, longer fuel lines, and lack of energy absorbing bumper systems of MPVs it is more difficult to control fuel leakage in frontal crash tests. To meet the Standard, MVPs may require structural changes which passenger cars do not need.

Real World Performance of the Standard

It is clear that the specifications of FMVSS 301 do not directly apply to a number of crash situations. These include:

- Those at speeds higher than specified in the Standard.
- Impacts with any object which is not perfectly flat (poles, abutments, car bumpers, etc.).
- Real world rollover crashes, especially where the filler spout projects out from the vehicle body.
- Collisions causing intrusion into the area of the fuel tank, filler spout or evaporative canister.
- Running off the roadway over barriers or rocky, uneven terrain.

In general, fire and/or fuel spillage are relatively rare events in motor vehicle collisions [9, 10, 11]. The various studies summarized in Reference 9 point out an important fact in evaluating the real world performance of this Standard: fire occurs in approximately one in a thousand motor vehicle accidents, and only one in twenty of all vehicle fires is due to a collision. Given these figures, there are about 17,000 accident-related vehicle fires per year in the entire country; and of the vehicle fire records which fire departments might keep, only 5 percent of their reports would apply to vehicle fires due to collision. The measurement of the more frequent occurrence of fuel spillage is harder to detect because of evaporation and absorption of the lost fuel. The frequency of fuel system damage in real world accidents is perhaps the best physical measure of an indirect effect of the Standard.

Because there is an obvious relationship between fires, fuel sources and ignition sources, the real world performance of the Standard will depend on limiting potential interactions between the fuel and ignition sources. Therefore, the impacts of the introduction of the fuel vapor recovery system and catalytic converter, as well as a consumer trend toward purchase of vans, motor homes and other potentially hazardous larger vehicles, makes the evaluation of the performance of the Standard even more difficult.

---

*The majority of the changes to the carburetor have resulted in engine performance improvement.

3.4 Review of FMVSS 208 - Occupant Crash Protection

Originally introduced in 1968, the Occupant Crash Protection Standard has been modified several times. Its major change has been to allow vehicle manufacturers three options for satisfying the Standard. Options #1 and #2 have less specific equipment criteria and more detailed injury criteria. Option #3 has specific equipment requirements for the seat belt assemblies but few or no injury criteria, depending on the type of assembly installed. The objective of this Standard is to decrease occupant injury through increased usage of restraint systems--active systems such as the current lap/shoulder belt combination, or passive system typified by the passive belt or air cushion restraint system.* In many of the earlier versions of the Standard, the active methods of occupant crash protection were scheduled for elimination. There has been considerable controversy concerning the relative effectiveness and costs of the alternative active and passive systems. The current version of the Standard does not give any date for the elimination of active systems. Since the Standard became effective on 1 January 1968, automobiles have been equipped with a variety of occupant restraint systems, such as lap belt only, separate lap belt and shoulder belt, and integral lap belt and shoulder belt. At present, the overwhelming majority of vehicles have the integral lap belt and shoulder belt system. Table 3-3 gives the important changes in the Standard by model year.

Purpose of FMVSS 208

- The specific purpose is to establish performance requirements for the protection of vehicle occupants in crash situations.
- The general purpose is to reduce the number of deaths and the overall severity of injuries in motor vehicle accidents.

General Requirements of FMVSS 208

The current Standard allows the manufacturer to comply under three different options, each with different performance criteria. In general, the requirements are:

- Option #1 requires a completely passive protection system which meets all the injury criteria in the frontal barrier crash at 30 mph and the lateral moving barrier crash at 20 mph. In the rollover test at 30 mph the only injury criterion is that the test dummy should be contained within the passenger compartment throughout the test. Other injury criteria limit the forces on the head, chest and upper leg during crash tests.

---

*The effectiveness of the Standard depends completely on the usage of the protection systems. The passive system is favored because it would always be in use, without an explicit action ("buckling up") on the part of the occupant.

TABLE 3-3

APPLICABILITY OF THE STANDARD BY MODEL YEAR

Model Year	Occupant Crash Protection Standard Requirements
Pre-1968	• No requirements, but lap belts were standard equipment on most cars.
1968*	• Type 1 (lap) or Type 2 (lap and shoulder) seat belt assemblies required at each seat position. (FMVSS 209 specifically described the assembly and FMVSS 210 described requirements for the anchorage.)
1972**	• Manufacturers were given three options for meeting the Standard. The first option required a totally passive system for crash protection. The second option required a lap belt and some other passive features to meet the frontal crash requirements. The third option specified an integral lap/shoulder belt system with warning device and had no injury criteria. (After August 15, 1973, the third option was to be eliminated; however, that date was continually postponed.
1974	• The third option was modified to require an ignition interlock device. • If only a lap belt is used, the vehicle had to meet the frontal barrier crash requirements and injury criteria. • The second option was upgraded to a complete passive protection system in head-on test crashes although some type of seat belt was still required.
(1975)	(• The ignition interlock requirement was revoked early in the 1975 model year--29 October 1974. However, many models were produced with the interlock system.)

*FMVSS 208 became effective 1 January 1968, which was after the beginning of the 1968 model year.

**This change came after the start of the 1972 model year (1 January 1972); however, this change did not affect how the manufacturers were complying.

- Option #2 requires a head-on passive protection system for front seating positions which meets all the injury criteria in a 30 mph perpendicular, frontal barrier crash. The option also requires installation of at least a lap belt with warning system.
- Option #3 requires only a lap and shoulder belt protection system with a belt warning system. If only a lap belt is provided, then the vehicle must be capable of meeting the perpendicular frontal barrier crash requirements including injury criteria.

Measures of Effectiveness

Since the Standard's stated purpose is to reduce the occurrence and severity of injury, injury-related measures are the most obvious means of assessing the Standard's effectiveness. The injury criteria employed for testing under the Standard are:

- The test dummies used in each crash test are to be contained within the passenger compartment throughout the test.
- The acceleration of the head of the test dummies cannot exceed an index level of 1,000. The index is an integrated expression of the acceleration forces on the head in any period during the crash. Prior to 31 August 1976, the acceleration was measured during any period when the head is in contact with any part of the vehicle other than the belt system.
- The acceleration forces on the chest are measured at the center of gravity of the upper thorax. These forces must not exceed 60g for longer than 3 milliseconds total. Prior to 31 August 1976, this acceleration was measured with a severity index which could not exceed 1,000.
- The axial forces on the upper leg cannot exceed 1,700 pounds.

The above explicit injury criteria, however, are applicable only under the first two options for passive protection systems.* The vast majority of automobiles in recent model years (1973-1977) are equipped with seat belt assemblies which comply with the third option and thus the net effectiveness of this restraint system depends on their usage by vehicle occupants. For this reason, the estimating of the effectiveness of the Standard must cover both the effectiveness and usage of the system. Because the Standard's stated purpose is the reduction of the number and severity of injury, the Abbreviated Injury Scale (AIS) is the most obvious measure of effectiveness of the Standard.

Means of Complying with the Standard

Since 1 January 1972, manufacturers have had three options under which they could comply with FMVSS 208. The first option was to provide a totally passive system: no manufacturer has complied under this option. The second option encourages the manufacturer to provide some passive protection systems, but does not require complete reliance on the passive systems as the first option does. Option #2 requires, when using the passive system alone, that injury criteria must be met for front seat passengers in frontal collision into a barrier at 30 mph. However, these vehicles are also required to have seat belt assemblies with warning systems, with some exceptions in the case of passive belts. Some manufacturers have provided systems which have met this option on some of their cars. General Motors provided an Air-Cushion Restraint System (ACRS) as an option on a few of their larger vehicles for several model

*With the exception that under Option #3, if only a lap belt is provided, then the vehicle must be capable of meeting the perpendicular frontal barrier crash requirements, including injury criteria.

years. Volvo is currently field testing an air bag type system on some of their cars. Since 1975, Volkswagen has offered a passive belt system as an option in its VW Rabbit.

The vast majority of cars sold in the U. S. today comply with FMVSS 208 under the third option--combination lap/shoulder belt assemblies with warning devices. If a manufacturer chooses to provide just a lap belt, then he has to show that the vehicle meets the perpendicular frontal crash test requirements, which include injury criteria. By providing the lap/shoulder belt combination, the manufacturer has only to meet hardware requirements, not crash performance criteria. The seat belt assemblies must fit a wide range of persons. The lap belt portion must fit everyone from a 50th-percentile 6-year old to a 95th-percentile male (i.e., 47 to 215 lbs, respectively). The shoulder portion must fit everyone from a 5th-percentile female to the 95th-percentile male with the seat in any position. The lap belt portion must have an emergency-locking or automatic-locking retractor, while the shoulder portion must be adjustable manually or with an emergency-locking retractor.

The seat belt warning system has many detailed specifications about when and how it should operate. During the 1974 model year and part of 1975, the seat belt warning/ignition interlock system stirred considerable controversy. The interlock requirement was revoked by Congress in 1974. Presently, both a visible and an audible warning are given for at least four and not more than eight seconds when a seat is occupied and the belt is not buckled.

Since introduction of the Standard, there have been several variations of the seat belt restraint system in cars sold in the U. S. Table 3-4 below describes by model year the method used in most models.

Real-World Performance of the Standard

The real world performance of FMVSS 208 is dependent on a number of key factors which can be grouped under the following headings: (1) Usage; (2) Characteristics of Occupants; (3) Actions of Occupants; (4) Characteristics of Car Interior; and (5) Type of Accident.

Usage. The overwhelming majority of cars complies with FMVSS 208 through the inclusion of active restraint systems which require action on the part of the driver and other occupants. A significant majority of drivers and passengers does not use the system, and, hence, considerably negates any potential benefits in terms of injury reduction or elimination which could accrue from the Standard. Urban usage surveys suggest that usage is 20 to 30 percent.

TABLE 3-4

PRIMARY CRASH PROTECTION COMPLIANCE METHODS

Model Year(s)	Common Type of Seat Belt Assembly
1968 - 1971	• Domestic manufacturers supplied cars equipped with lap belt systems. Some provided additional shoulder belts. [Foreign manufacturers often supplied a Type 2 (3-point) belt.]
1972	• Late model year cars came equipped with a persistent belt warning system. More domestic manufacturers supplied separate lap belts (Type 1) and shoulder belts (Type 2a)-- a 4-point system.
1973	• The Standard required a Type 2 belt with a detachable shoulder portion.
1974 - 1975	• Ignition interlock was introduced to be used with Type 2 belts (non-detachable shoulder belts). The persistent warning system was changed to a simple (4-8 second) warning system in early 1975 model year cars.
1976-Present	• Although the ignition interlock requirement was revoked early in the 1975 model year, the interlock system was not removed from most cars until the following model year.

Characteristics of Occupants. Requirements for the seat belt assembly are that (1) the lap portion must fit persons from a 50th-percentile 6-year old to a 95th-percentile male (47 lb to 215 lb) and (2) the upper torso restraint must fit all persons between a 5th-percentile female and a 95th-percentile male with the seat in any adjusted position. Persons outside these ranges may find it difficult to make use of the restraint system and/or could experience seat belt-related injuries, if used. Even with properly adjusted belts, the flexing of the flesh and the type of clothing worn affect belt restraint effectiveness.

The potential for occupant injury is, of course, affected by other occupant characteristics. Occupant health, age and sex may have a significant effect. The very old and the very young can experience more severe injuries than a healthy adult in his or her middle years, for example. Tall people have an increased potential for head injury, especially in small cars.

Actions of Occupants. A number of actions taken prior to and during an accident can affect injury risk with the use of lap and/or shoulder belts. Loosely worn and improperly adjusted belts negate the load-limiting effects of belts and may cause additional injuries due to the belt. The retractable 3-point lap/shoulder belt system reduces the likelihood of an improperly worn belt in the front outboard seating positions.

Proper seating position will affect the potential for the restraint system to protect an occupant from injury. Obviously, when an occupant is leaning forward or sitting sideways, the lap/shoulder belt system may be ineffective or less effective in preventing injury.

Characteristics of Car Interior. The effectiveness of belt restraint in minimizing injuries will be affected by the quality of instrument panel padding and bending and/or fracture strength. This is covered by FMVSS 201. The adjusted front seat position regulating the distance from the driver/passenger to the steering wheel/front dashboard is another factor affecting possible injuries. Other factors such as an open glove compartment or ash tray or loose objects can contribute to injuries.

Type of Accident. The action and potential effectiveness of restraint systems in reducing or preventing injury are related both to type of injury and collision speed. At very low speeds, there is usually no injury, while at extremely high speeds, all occupants are usually killed or injured, often because of destruction or major deformation of the passenger compartment, occupant ejection, or fire. Seat belts are expected to have their greatest effectiveness at moderate speeds.

The type of impact is also important. Rear collisions cause rearward neck strain which is not addressed in the Standard. In this case, the back of the seat and head restraint comprise the restraint system. The effectiveness of belt restraint in frontal and side impacts may be quite different, due to significant differences in the lateral and longitudinal loading forces.

3.5 References for Section 3.0

1. Larousse, Rene, *Energy Absorption by Structural Deformation*, SAE Report No. 73007, January 8-12, 1973.

2. Hai, Wu, *A Study of Automotive Energy Absorbing Bumpers*, SAE Report No. 730024, January 8-12, 1973.

3. Compton, R. H., C. Westphal, Jr., and R. Crone, *Bumper Systems Soft Face vs. Model 1973 Steel System*, Motor Vehicle Programs (NHTSA), November 1974.

4. Appleby, Michael R., *Occupant Safety and Damageability Considerations Related to 1974 Automotive Bumpers*, SAE Report No. 740989, October 21-25, 1974.

5. NHTSA, *Part 571 Motor Vehicle Safety Standards: Standard No. 301 - Fuel System Integrity*, Federal Register, Vol. 40, No. 200, October 15, 1975, p. 48353.

6. Savery, D., D. Blaisdell, and J. Kerkhoff, *Automobile Collision Fires*, Proceedings of the Eighteenth STAPP Car Crash Conference. Society of Automotive Engineers, Inc., 1974.

7. Robertson, S. H., *A New Look at Fuel System Design Criteria*, Proceedings of the Tenth STAPP Car Crash Conference. Society of Automotive Engineers, Inc., 1966.

8. Savery, D. M., H. M. Brink, and J. D. Baire, *Postcrash Studies Show Need for Rear-Seat Fire Wall and Rupture-Proof Fuel Tank*, SAE Journal, July 1969.

9. Cooley, P., *Fire in Motor Vehicle Accidents*, HIT LAB Reports. Highway Safety Research Institute, Volume 5, Number 1, September 1974.

10. Siegel, A., and A. Nahum, *Vehicle Postcollision Considerations*, 1970 International Automobile Safety Conference Compendium. Society of Automotive Engineers, Inc., 1970.

11. Johnson, N., *An Assessment of Automotive Fuel System Fire Hazards*, DOT-HS-800-624, Dynamic Science, Phoenix, 1971.

4.0 APPROACHES TO EVALUATING THE STANDARDS

SUMMARY

The approaches to evaluating the Standards all face a similar problem: isolating the effect of one Standard from the effects of other Standards, changes in the Standard of interest, other changes in vehicle design and material, and external factors influencing accidents and severity. These problems are approached by selection of existing data bases or collection of new data which promises to show the expected effect most clearly. All the suggested approaches for evaluating the effectiveness of individual Standards had separate analyses of existing data and of new data. The major approach and problem for evaluating each Standard are:

FMVSS 214: Use detailed NCSS accident data and possibly gather similar new data and use a statistical model to estimate the effect of the side door beam on injury and intrusion. Because of the complex nature of the injury mechanism and the engineering evaluation that the beam only has an effect at low speeds (and possibly a counteracting effect in some situations), the effect of the Standard may be difficult to isolate.

FMVSS 215: Using the State Farm Mutual Insurance Company claim data will show an initial estimate of the effect of improved bumpers on the frequency of damage to related parts. Analyses of other existing data bases cannot provide as clear a picture of the Standard's effect because its effect is in low speed normally non-reported accidents. To delineate those accidents, we suggest a car owner survey.

FMVSS 301: Analysis of this Standard is hampered by the low frequency and reporting inconsistencies of fire/fuel spillage accidents. We feel that the most promising approach would be to check fuel system rupture in towaway accidents. However, all the approaches to evaluating this Standard --analyses of fire/police department data, and of fire-related fatalities, as well as fuel system rupture--are speculative.

FMVSS 208: The basic approach for evaluating lap and lap/shoulder belts is to extend the RSEP study by combining that data base with the NCSS data. Secondly, BEV is being added to the RSEP data so that this new analysis can study the effect of impact speed. The analysis of the passive restraint system uses the same statistical model but must wait until sufficient data become available.

Because many of the approaches use similar data and because of other reasons, it is possible that the evaluation of the Standards could be integrated to some extent, the most obvious cases of this being the uses of mass accident data, NCSS/RSEP data, towaway accident data, and hardware cost data. In the case of hardware costs, we have expressed some reservations that actual consumer out-of-pocket costs for a Standard are strictly related to hardware costs because of manufacturing and marketing price policies.

4.1 Approaches for Evaluating Individual Standards

FMVSS 214

The requirement for strengthened side doors is based on the experience that injury severity increases with depth of door intrusion in side impact crashes. Therefore, the performance requirement of the Standard is to limit the door intrusion in a crash. The ultimate purpose, however, is to reduce injury severity. If the Standard is successful, injury frequency will also be reduced, because minor injuries will be reduced to no injury.

The injury generating mechanism is complicated. If a car is hit by another car, the door is deformed until the reaction forces are strong enough to move the car. Calculations suggest that initially the door structure is moving toward the occupant. Later, when the vehicle is moving sideways, the occupant moves relative to the vehicle and will finally hit the vehicle structure somewhere, and possibly eject. The situation is similar when a car skids into a fixed object sideways. Since the side beam affects only one aspect of the injury mechanism, its effect may not be very obvious. Also, it may be limited to only certain types of injuries.

The objective of the evaluation of the effectiveness of the Standard is two-fold: (1) to evaluate the performance reduction in intrusion, and (2) to evaluate the reduction in injuries. In both cases, it is clear that many factors other than side door strength influence the depth of intrusion and the forces on the occupant, and thereby the resulting injury. The most important other factors are probably the speeds of the colliding vehicles, the angle between the directions of vehicle movement at the time of impact, and the exact point of door contact. Other factors are details of the construction of the vehicles, and the characteristics of the occupants such as height and weight. To make a valid comparison between cars with and without side beams, the effects of such factors have to be controlled in the analysis, or otherwise eliminated.

The effects of the extraneous factors influencing intrusion and injuries are not sufficiently well known to eliminate them by analytical methods. Therefore, statistical methods have to be applied to empirically determine the influence of these factors and to eliminate them. There are several difficulties in applying existing statistical techniques. One is that most of the factors influencing intrusion and injury are continuous, but some are categorical. However, in practice, some continuous variables are given only by categories. The combined use of categorical and continuous variables in a model poses a number of operational problems. A more serious problem in studying injury reduction is that injury is a categorical variable. Statistical analysis techniques which deal with categorical dependent variables can detect shifts from one category to another, but they cannot discern small but consistent shifts within several categories. An analysis limited to only two categories (e.g., "injury" and "no injury") may not be sensitive enough to detect small shifts over a wide range.

If exactly one type or level of injury would result from any given combination of precrash factors, it would be relatively easy to determine the influence of these factors. In reality, however, the type and severity of injury resulting from a specific crash is not precisely predictable. The best one can expect is to predict the probabilities with which the various levels

or types of injuries occur. If the categories of "no injuries" and "injuries of low severity" are not completely reported, the estimates of these probabilities can be seriously distorted, and it might become impossible to detect a real effect of a Standard. The practical question is: how complete are "no injury" and "low injury" crashes reported? The success of any analysis that uses "frequency of a certain injury level" hinges on the answer.

One way to overcome this problem is to restrict the analysis to towaway crashes. Need for towaway appears to be a fairly objective criterion for the severity of damage to a car. There exists, however, the possibility that side beams might reduce intrusion, and thereby reduce the need to tow a car, even though side beams may not reduce injury severity. In this case, reduction of the number of towaway crashes, and no change in injury severity in cars which are towed, may result in an apparent spurious increase in injury severity in side beam cars.

Other approaches which can be considered are:

- Studying risk of occupant injury per exposure measure. However, vehicle-miles-of-travel can only be measured with low accuracy.
- Studying injury experience in two car collisions. This is currently being tested for NHTSA under Contract NHTSA-7-3261.
- Surveys of households or body shops to find incidence of low damage side impacts. The reliability of this method is low.

We conclude that currently it appears most reliable to use towaway crashes as a basis for the analysis.

In addition to obtaining a consistent sample of crashes, one has to obtain sufficient information about the crashes. Certain information is readily available, such as make and model/year of the involved vehicles, and all associated characteristics. Age and sex of the occupants are also easily available as are impact areas on the vehicles. The velocities of the vehicles and the angle of impact, however, have to be reconstructed by fairly complex processes, which require various assumptions about the characteristics of the vehicles involved. While not totally accurate, such results are still far superior to anything that could be derived from analysis of available mass accident data.

The collection of new data should be biased towards low to medium severity side impacts, to help assure that the effects of side beams will be adequately sampled. Such accidents are most likely to be found at intersections in urban areas. In many studies, the question of whether the data are "nationally representative" is extensively discussed. For evaluation of side beam effectiveness, representativeness is not a problem; the effects of the Standard in specific crash situations can be estimated from a biased sample of crashes. Representativeness becomes a problem only if one wants to estimate the effects of the Standard relative to all crashes. To evaluate side beam effectiveness, it is better to obtain a biased sample from urban crashes, where most of the side impacts will be relatively minor, and side beams may be most effective. It is then possible to correct for the bias and generalize the results to rural areas, where there are more high speed crashes in which side beams are apt to have little impact on intrusion and injury reduction because of the extreme severity of the crash effects.

FMVSS 215

The purpose of FMVSS 215 is to prevent damage to safety related parts of cars in low speed crashes. In addition, it is expected that damage to other parts will also be reduced.

The main problems with evaluating this Standard are:

(1) It is very specific in terms of the vehicle parts and systems to be protected, and

(2) It applies to low speed crashes, of which many are not reportable, and many of the reported ones are not investigated by the police or any other non-involved party.

To obtain information on damage to the vehicle parts covered by the Standard, at least the following approaches are potential candidates:

(1) Identify and investigate in detail low damage crashes.

(2) Analyze automobile insurance claims.

(3) Analyze sales of repair parts for the protected vehicle parts and systems.

(4) Analyze the frequency of towaway due to damage to the protected parts and systems.

(5) Analyze the frequency of front (or rear) impacts relative to all impacts in old accident data, because damage reduction may bring certain collisions below the reporting threshold.

The first approach encounters the second difficulty mentioned above: that low damage crashes are not reported. The question is: "How does one identify low speed crashes? The leading possibility for identification suitable for statistical analysis is a survey of car owners. Even if the car owners respond to the survey, it is unlikely that more than rudimentary information on the crash can be obtained. To obtain details on vehicle damage, a followup vehicle inspection would be required. It appears highly doubtful that a sufficient number of owners would agree to such inspection, if only because of the inconvenience involved. Furthermore, the expense of inspection would be very high. Another problem is that a specific car owner might not be aware of no-damage collisions in which other drivers in their household have been involved with the car.

The second approach--analysis of automobile insurance claims--is subject to the following problems:

(1) Automobile insurance policy holders are a biased sample, by company policy, and by owner choice. Also, automobile insurance claims for low damage crashes are a self-selected sample.

(2) The claims data automated by insurance companies are very limited. To retrieve detailed data from the hard copy files is inherently difficult and likely to be prohibitively expensive.

(3) Two distinctly different kinds of insurance deal with vehicle damage: collision insurance and property damage liability. The first is limited to damage to the insured vehicle (and also to damage to other vehicles driven by the insured), the second covers all property damage of third parties, including non-vehicle damage. In addition, the relation between claimant and insurance company in a liability case is adversary; therefore, information availability may be limited.

There appear to exist only two insurance data bases which are usable: Highway Loss Data Institute (HLDI) collision claim data, and detailed collision damage data sampled by State Farm Mutual Insurance Company.

HLDI data contain the total amount of a collision claim, detailed car model information, the applicable deductible, use of the car by a young driver, and rating area. Total claim figures are of extremely limited value: they reflect the influence of collision types, of repair parts cost, and of repair labor cost, in addition to the influence of the physical damage. It appears impossible to draw any specific conclusions on damage reduction due to FMVSS 215 from these data.

State Farm Mutual Insurance Company has analyzed samples of collision claim repair bills beginning in 1973. Usually, these samples cover the current model year, but occasionally samples of all insured vehicles are made. For each case the damaged parts are identified. Comparing the frequencies of damage to certain parts between model years should allow a realistic estimate of changes in vehicle damage patterns.

The third approach would analyze sales of repair parts, including parts which are protected by the Standard. Certain parts, e.g., lenses to taillights, are model and model-year specific. Analyzing the time trends of sales of such parts in relation to parts not protected by the Standard could indicate an effect of the Standard. The main problems are: there are only a few parts which are model/model-year specific, and the manufacturer's sales records would have to be obtained. A statistical problem would be to account for fluctuating inventories held by distributors and dealers. Therefore, this approach appears to hold little promise.

The fourth approach uses the fact that some of the parts protected are necessary for the operation of the vehicle, such as fuel system,cooling system, propulsion system, steering and braking. If damage to them becomes less frequent, the need for towing crash-damaged cars should be reduced. Aside from the fact that towing is only indirectly related to the requirement of the Standard, this approach appears possible and promising.

The fifth approach would use existing mass accident data, beginning with 1972, and analyze the relative frequencies of front and rear impact accidents relative to all others. A reduction in damage might bring certain crashes below the reporting threshold and thereby reduce their relative frequency. Mass accident data from Virginia and New York suggest that a change in reporting requirements does indeed result in a change in actual reporting practice. Therefore, it is plausible that a reduction in damage will result in a reduction in reported accidents. An important advantage of this approach would be that it would analyze cars not satisfying the Standard when they were still new, and damage is more likely to be reported.

With the exception of the analysis of State Farm data, the above approaches are speculative with the following two approaches having little promise. The analysis of sales of repair parts may encounter difficulty in data acquisition and is unlikely to provide much information, even if data could be acquired. The HLDI data for damage costs are so highly aggregated that there appears little chance of success using that base to determine the effectiveness of FMVSS 215.

FMVSS 301

The purpose of FMVSS 301 is to reduce deaths and injuries occurring from fires resulting from fuel spillage in motor vehicle accidents. The Standard attempts to achieve this goal through establishing limits to fuel spillage in vehicle test situations.

The main problems with evaluating this Standard are:

(1) The infrequency of fire-related deaths in fatal accidents.

(2) Fires due to fuel spillage in accidents account for only a small percentage of vehicle fires, so that mass data bases with just motor vehicle fire data would be insufficient.

(3) Due to pollution control requirements, considerable changes have been made to the fuel system, possibly increasing the fire hazard.

Other problems in evaluating the Standard are:

(4) Without special training and equipment, it is difficult to detect fuel spillage/fuel system rupture, in an onsite investigation.

(5) In the case of fires, and fire-related deaths, there is the question of the cause of death. And in multi-car accidents there is the question of which vehicle caused the fire.

(6) Given the relatively low numbers of incidents of interest, the analyses will probably be limited to answering simple questions about whether there is any discernable effect of the Standard. Detailed analyses of makes and models or crash configuration may not be statistically meaningful, unless large effects actually exist.

To obtain information on fire and/or fuel spillage, at least the following approaches are potential candidates:

(1) Analyze the frequency of fuel system rupture in towaway accidents for various model years.

(2) Analyze the frequency of fire and/or fuel spillage in motor vehicle accidents by using historical accident data from fire and police departments, or through new data collection.

(3) Analyze the frequency of fire-related deaths in motor vehicle accidents using various state Fatal Accident files and possibly Vital Statistics records.

Determining the frequency of fuel spillage in motor vehicle accidents will be difficult because of the fast evaporation rate of gasoline and other difficulties in detection. Also, until the 1977 model year, other vehicles (multipurpose vehicles, vans, trucks, buses) up to 10,000 lb GVWR did not have to meet FMVSS 301. Therefore, these vehicles cannot be included in the basic analysis. However, these vehicles represent a significant portion of the vehicle population (20% of the passenger car sales in 1970, 29% in 1975) and any information gathered on them would be of value.

The first approach encounters the basic problem of measuring fuel system rupture. The type of accident would have to be restricted to towaways in order to assure that the vehicle is available for thorough examination. The second approach reduces the stringency of the fuel system integrity question by focusing on visible evidence which is immediately observable and probably requires fire department attention. The information on fire/fuel spillage could be obtained from a variety of sources: (1) historical fire department records; (2) new data collection by police; and a limited number of cases from (3) the National Crash Severity Study (NCSS). The third approach, the study of motor vehicle fatalities due to fire, has the basic problem of sample size and data accumulation. Preliminary investigations indicate that four states* segregate fatal accident hardcopy files to make them readily accessible. We believe it is safe to infer that at least the majority of states also maintain easily accessed fatal accident files.

In summary, the first approach is the most systematic and precise but it suffers from having relatively few early models in the accident population. When historical data are used, the second approach overcomes the first problem but encounters potential problems of data inconsistencies. If police collect new data, there is the time delay and underrepresentation of earlier models. However, potentially more data could be made available. The last approach most directly addresses the objectives of the Standard. However, the infrequency of fatalities due to fires in motor vehicle accidents limits data availability.

The evaluation of the effects of FMVSS 301 faces two potential problems:

(1) The use of current information from specially investigated accidents implies that all cars preceding the Standard are "old." Therefore, deterioration of the fuel system--rust, corrosion, fatigue, deterioration of rubber or plastic components, etc.--may increase the risk of fuel spillage.

(2) In older accident data, which involve pre-Standard cars when still "young" and presumably not (or less) affected by fuel system deterioration, it is not clear that fuel spillages and fires are reported completely or consistently.

The degree to which these problems will arise is an empirical question which cannot be answered with the currently available information. It is quite likely, however, that they will have some effect. Therefore, it is not feasible to design a straightforward evaluation plan which will result in the conclusion that FMVSS 301 has a specific effect of reducing fuel spillage by X percent, or that

*Connecticut, North Carolina, and Texas have physically separate files. New York saves low file numbers for fatal accidents.

an effect, if any, is less than Y percent. One may possibly obtain such a result, but it is quite likely that the only possible conclusion will be that there are other effects, possibly masking all or part of the effect of FMVSS 301. In such a case, only *ad hoc* analyses, designed to eliminate such effects as far as possible, promise some hope of isolating the effect of the Standard.

Therefore, all approaches proposed above are to a large extent speculative. None will lead with certainty to a conclusive result. As a purely subjective judgment, it is expected that the analysis of new data to be collected will be the most promising approach, provided that there is no significant fuel system deterioration with age. The analysis of fire department records appears to be the second most promising example. Analysis of fatal accidents appears least promising by itself. Using any two, or all three of these approaches, however, may give convincing overall results because of the independent nature of the basic data, even though each analysis by itself may be actually or potentially subject to uncontrolled influences.

FMVSS 208

The purpose of FMVSS 208 is to reduce the number of deaths and overall severity of injuries in motor vehicle accidents by establishing performance requirements for the protection of vehicle occupants in crash situations.

The principal difficulties in evaluating this Standard are:

(1) The effectiveness of the existing implementation of the Standard depends on the actual usage of the restraint system. Measures of such usage in actual accident situations are often based on estimates.

(2) In meeting the Standard, an assortment of methods have been used; these must apply to a wide range of individuals and crash situations.

(3) Manufacturers can comply with the Standard under any of three options, and are continually encouraged to upgrade the effectiveness of their systems.

Other problems in evaluating the Standard are:

(4) The 1974 and some 1975 models had ignition interlocks which substantially changed the degree of belt usage in those model year cars.

(5) There are relatively few vehicles presently on the road meeting the more rigorous Option 2 criteria. However, recent agreements between DOT and the manufacturers promise to increase that number, but not before the 1980 model year.

To obtain information on the effectiveness of this Standard, three approaches have been proposed:

(1) Analysis of a combined NCSS/RSEP* data base.

(2) Analysis of accidents of existing air bag and passive belt vehicles with plans to incorporate new data.

*RSEP - Restraint System Effectiveness Program; NCSS-National Crash Severity Study.

(3) Collection of a nationally representative sample of restraint system usage.

The first two approaches concentrate on the effectiveness of the Standard, given the usage of the occupant protection system. The purpose of the third task is to provide the background necessary to determine the overall effect of the Standard in the entire driving population.

Combining the RSEP and NCSS data bases will provide not only more data but also a broader range of model years and new information on impact speed.* The differences between the proposed analysis and the RSEP study lie in this newly available data. Tests can now be made for effects of speed, impact angle and possibly restraint system locking systems. The statistical analysis would also differ to a certain extent because continuous variables will be used, such as speed.

In the case of passive systems, a limited number of air bag and passive belt-equipped vehicles are presently on the road--approximately 11,000 and 65,000 respectively. Because of the limited numbers of vehicles made available with these options, the present population may be highly biased. However, the present agreement between DOT and the manufacturers promises to make these vehicles more broadly available--but for air bags not before the 1980 model year. Therefore, the analysis recommended in this case focuses on developing analysis programs and some initial estimates of effectiveness, and then processing additional data as it becomes available. The recommended statistical analysis is very similar to that for the NCSS/RSEP data, to provide comparability of results.

The restraint system usage survey is presented in response to a request expressed by the Contract Technical Monitor. The usage information obtained from existing accident studies is biased towards the accident population. Also, these studies rely largely on claimed system usage, although RSEP and other serious studies are very careful about this. The usage survey may reveal some differences between the general driving population and the usage in the accident population.

In conclusion, the first analysis will address the additional questions about the effects of speed and angle of impact which could not be addressed in the RSEP study. The second analysis will concentrate on the passive systems and will prepare for the large number which will come into the vehicle population with the 1980 and 1981 model year cars. The third analysis is necessary to place the effectiveness of the Standard in an overall context. However, some may judge that existing restraint system usage studies already supply adequate information.

---

*BEV is being added to the RSEP data base; it was not available in the original study.

4.2 Integrating the Evaluation Approaches

There are several reasons for integrating the evaluation approaches, e.g., multiple use of the same data base or other data collection techniques. Also, the evaluation approaches can be better sequenced to spread the level of effort and provide an orderly progression of preliminary and interim results. Therefore, it is suggested that the following occur at the same time:

- Analysis of mass accident data for FMVSS 214, 215, and 301.
- Analysis of NCSS/RSEP data for FMVSS 214 and 208.
- Analysis of towaway data effort for FMVSS 214, 215 and 301.
- Surveys for FMVSS 208 and 215.
- Hardware cost data.

In addition, there are some analyses which are relatively simple and straightforward and should be done early in the evaluation: analysis of State Farm and HLDI data for FMVSS 215. Other analyses are distributed over the evaluation period because of the rate at which data become available (analysis of passive restraint systems) or probability of finding significant results (analysis of fire/fuel spillage data before analysis of fire-related fatalities).

Although this integration of approaches offers a distinct potential for efficiency and cost savings, there will be some added burden in terms of planning and coordination. Secondly, the combined analysis will be perforce less focused on any individual Standard. And, finally, it may be judged that cost effectiveness is not an important criterion and that comprehensiveness is, resulting in integration by Standard, rather than task similarity.

4.3 Cost Data

NHTSA has stated that to measure the consumer's out-of-pocket expenses the cost categories should be:

- Direct manufacturing
- Indirect manufacturing
- Capital investment (including testing)
- Manufacturers' markup
- Dealers' markup
- Taxes*

However, we feel that the consumer's initial costs are determined by a complex process, with different types of bargaining at the retail, wholesale, and manufacturing levels. It is well recognized, and also acknowledged by the auto manufacturers, that wholesale prices are set in response to market conditions, and that their relationship to manufacturing cost is loose. In a recent CEM study† this question was examined and no relation was found between annual increases in manufacturers' cost of satisfying FMVSS's as estimated by GAO, and the retail price increases.

Certain cost categories can be estimated well: direct and indirect manufacturing, and capital investment, including testing. These costs represent real resources used. The question of markups is conceptually very difficult, considering the manufacturers' pricing strategies (trying to cover a market spectrum) and the oligopolistic nature of the market. Using average gross

*Personal communication from Warren G. LaHeist, Contract Technical Monitor, 18 January 1977.

†CEM Report 4194-574, *Program Priority and Limitation Analysis*, December 1976, Contract DOT-HS-5-01225.

profits for the manufacturing markup would be incorrect and misleading. To find the true markup would require a major study examining manufacturers' detailed cost data and pricing practices (internal and external).

The question of dealer markup is somewhat easier to consider conceptually. However, to determine it in practice is complicated by the trade-in of used cars. It appears highly likely that there is no fixed percentage markup on the dealer level, but a more complicated relationship which depends on the value of the new vehicle, the trade-in and other market conditions. Using an average gross profit, or the difference between wholesale and retail prices, would also be inaccurate and misleading.

With regard to the issue of taxes, this cost is not only borne in the form of a sales tax as the fraction of the components cost of the total car, but it is also accumulated at every stage of manufacturing in the form of property, payroll, sales (intermediate) and excise taxes. Income taxes are another cost; however, they are not directly related to the resources used but to the profitability of the manufacturers.

Therefore, based on the above discussion, we consider it beyond the state-of-the-art to estimate the true out-of-pocket cost of new car buyers due to satisfying the FMVSS. Good estimates of the costs of real resources consumed can be made, but these costs apparently are not passed on immediately or directly to the consumer of that model. Other costs (markups and taxes) are conceptually and practically difficult to establish. The most reliable estimate of consumer cost would have to be aggregated over the entire market and a several year period in order to account for changes in market strategy and conditions.

Another point of concern with regard to the collection of data on cost items is the periods of comparison--one model year before the effective date *vs.* the model year that the Standard became effective or the next model year. The first point is that manufacturers have made changes to vehicles prior to the effective date of compliance, especially in the case of totally new models. Secondly, there is the learning curve effect in most manufacturing processes which will reduce the effective cost of manufacturing over time. With regard to this second effect, savings would be difficult to estimate, especially as these new components become more integrated into the basic structure of the vehicle. Therefore, using these time periods for comparison may tend to overestimate the cost of the Standard.

Generally, specific hardware costs will be collected for each Standard. The number of models for which costs will be collected depends on the differences in costs and implementations between models and manufacturers--for side door beams fewer models need be sampled than for bumpers. For FMVSS 214, side door beams are considered; bumper systems for 215; fuel systems for 301; and restraint systems for 208.

5.0 METHODOLOGIES FOR EVALUATING THE STANDARDS

5.1 Introduction

The four FMVSS's which are the subject of this study apply to different motor vehicle systems and the performance criteria for each Standard vary considerably. Within this context, alternative evaluation methodologies have been proposed for each Standard, which vary in the anticipated value of their results and the effort required to perform them. There are, however, two components of these diverse tasks which are similar and in some respects identical for otherwise unrelated analyses. These are the statistical techniques used and the associated data sources for each recommended analysis. This section will first describe the data bases currently (or imminently) available and other data sources needed for the various proposed analyses. Then a general description of the statistical methodologies employed will be presented, together with a description of the detailed analyses proposed for each Standard. The final subsection will present a cost data acquisition plan to determine hardware costs for each Standard's implementation.

5.2 Sources of Data

The objectives of the proposed analysis for each data source, both existing bases and new data collection efforts are given in Table 5-1. A short description of each data source follows.

Mass State Accident Data

These are automated data files of reported motor vehicle accidents within a state. They are generally maintained by the State Motor Vehicle Department or State Police and are coded using police and occupant accident reports. The formats, information collected, means of access, and number of cases available vary considerably among states. Because of this, state accident files are not detailed enough for use in evaluating the Standards. In addition, a specific mass data base might have sufficient information for one analysis but insufficient information for another analysis. Other problems with these data are questions of reliability and how completely reportable accidents are covered. Texas, North Carolina, and Hew York have extensive automated files which often have sufficient information for a proposed analysis. The particular state data bases suggested to be used and the expected number of cases available are described for each analysis.

National Crash Severity Study (NCSS)

The NCSS is an 18-month effort which began in October 1976 and will continue through March 1978. The goal is to collect data on 10,000 accidents by 1978. Data are being collected by seven NHTSA-sponsored organizations in eight locations: Western New York (CALSPAN), Michigan (HSRI), Miami (Univ. of Miami), San Antonio, Texas (SWRI), thirteen other counties in Texas (SWRI), Kentucky (Univ. of Kentucky), Indiana (Indiana Univ.), and Los Angeles, California (Ultrasystems). The sampling criteria are based on towaway accidents which are divided into three strata. Stratum 1 is sampled at 100 percent and consists of accidents where an occupant's injury requires at least an overnight stay in a hospital (includes fatalities). Stratum 2 is sampled at 25 percent and consists of accidents where an occupant requires hospital attention but does not stay overnight. Stratum 3 is sampled at 10 percent and covers all remaining towaways.

TABLE 5-1

ANALYSIS OBJECTIVES FOR EACH DATA SOURCE

Data Bases		Federal Motor Vehicle Safety Standards			
		FMVSS 214: Side Door Strength	FMVSS 215: Exterior Protection (Bumpers)	FMVSS 301: Fuel System Integrity	FMVSS 208: Occupant Crash Protection
Automated Existing Data Bases	Mass State Accident Data	Preliminary analysis of vehicle age & other non-side beam related effects, in preparation for NCSS data analysis.	Analysis of frequency of vehicle damage by area of damage to detect shifts away from bumper areas.	Analysis of proportion of fatal accidents involving fire in pre- *vs.* post-Standard vehicles (pre-1975 data).	
	NCSS (Towaway)	Detailed analysis to evaluate effect of side beams on: • Occupant injury severity. • Passenger compartment intrusion.			Primary analysis of the effectiveness of seat belts in reducing occupant injury.
	RSEP (Towaway)				Same analysis as NCSS data after BEV has been added to RSEP file.
	FARS			Analysis of proportion of fatal accidents involving fire in pre- *vs.* post-Standard vehicles (post-1974 data).	
	HLDI		Analysis of distribution of insurance claim payments between pre- *vs.* post-Standard vehicles.		
Non-Automated Existing Data Bases	State Farm Insurance Data		Analysis of damage repair data to compare bumper parts replaced in pre- *vs.* post-Standard vehicles.		
	Fire/Police Department Data			Analysis of proportion of all accidents involving fire or fuel spillage in pre- *vs.* post-Standard vehicles.	
	Passive Restraint Tracking System				Analysis of the effectiveness of passive restraints (air bag, passive belt) in reducing occupant injury. (Existing data.)
New Data Collection	Additional NCSS Type Data (Towaway)	Supplement to NCSS data for data categories with insufficient cases to achieve desired levels of significance.			
	Additional Passive Restraint Tracking System				Analysis of the effectiveness of passive restraints in reducing occupant injury. (Future data.)
	Restraint System Usage Survey				Observations of occupant restraint system usage tabulated by occupant & vehicle stratifications.
	Bumper Accident Car Owner Survey		Analysis of proportion of accidents which are low or no damage in pre- *vs.* post-Standard bumper vehicles.		
	Towaway Accident Survey (Tow truck operator sites)		Analysis of proportion of towaway accidents with frontal or rear involvement in pre- *vs.* post-Standard bumper vehicles.	Analysis of proportion of towaway accidents involving fuel system rupture in pre- *vs.* post-Standard vehicles.	

Restraint Systems Evaluation Program (RSEP)

The RSEP file contains data on 15,818 (weighted) occupants who were involved in towaway accidents of 1973-1975 model year vehicles in the calendar year 1974 or 1975. Data were collected by five NHTSA-sponsored teams located in Western New York (CALSPAN), Michigan (HSRI), Miami (U. of Miami), San Antonio, Texas (SWRI), and Los Angeles, California (USC). The general sampling criteria were 100 percent of all such accidents where at least one front seat occupant was treated by a hospital and 50 percent of all such accidents where no hospital treatment was involved. The latter data were chosen according to the odd-even status of the last license plate digit. There were variations to this scheme in specific sampling areas for specific time periods, but it was the primary scheme used.

Fatal Accident Reporting System (FARS)

NHTSA's FARS maintains detailed information on all fatal motor vehicle accidents. It has been implemented beginning with 1975 accidents. Since FARS includes data from all states, it is possible to use FARS instead of individual state fatal data from 1975 on.

Highway Loss Data Institute (HLDI)

HLDI is a non-profit organization that gathers, processes, and provides the public with insurance data. It has published a series of reports on collision claims [1]. The HLDI data contain the following information for make, series, and body type:

- Insured vehicle years
- Claim frequency per 100 insured vehicle years
- Average loss payment per claim
- Average loss payment per insured vehicle year.

This information is given by deductible amount ($50 and $100) and operator age group (under 25, or not) and by model year and accident year.

State Farm Insurance Data

The State Farm* data are a useful source of information with regard to damaged parts and their costs in collision claims. State Farm started collecting such damage repair estimates regularly for the current models in January 1973, as part of their "Current Model Year Study." At that time, similar information was also collected on selected 1972 vehicles. Some of these data were presented in *Patterns of Automobile Crash Damage* by Sorenson, Gardner and Cassassa [2]. They also take occasional samples of all claims during a certain period covering all model years.

Fire Department Data

Fire departments throughout the country collect data on motor vehicle calls to which they responded. An example is given of the type of information available at fire departments by describing the situation in Hartford, Connecticut. In Hartford from 1971 to 1976, the number of responses of the fire department to alarms ranged from 7700 to 13,800 annually. Each of these responses is entered on a single line of a log book with the reason for the alarm indicated. This log book can be scanned to determine which responses must be looked at in greater detail. During the 1971 to 1976 time period, the number of vehicle-related

*State Farm Mutual Automobile Insurance Company, Bloomington, Illinois.

responses ranged between 750 and 800 annually. The information which can typically be derived from the detailed accident form is the following: (1) incident number; (2) time and location; (3) vehicle year make, model, serial number; (4) vehicle occupants and injuries and fatalities; (5) occurrence of fire and/or fuel spillage; (6) location of fire and material ignited; (7) involvement in accident and single or multi-vehicle; and (8) type of collision (rear end, etc.). It is of considerable interest to note that, in Connecticut, state law requires a report to be filed by the Local Fire Marshall to the State Fire Marshall within 10 days after each fire. Thus, reports contain the above information in summary form, together with a dollar estimate of damage. Thus, in Connecticut, all fire-related vehicle accident information from various cities and towns can be obtained at a single location (State Fire Marshall's Office). Note: this is not true of fuel spillage accidents. Cross-tabulation with police department records may be necessary to acquire missing information.

Passive Restraint Tracking Systems

There are currently several sources which document air bag accidents. The NHTSA maintains a National Response Center which provides a 24-hour phone service for reporting air bag vehicle accidents. General Motors Corporation provides the National Response Center phone number on the sun visor of all its air bag-equipped cars. Once an air bag deployment is identified, NHTSA performs a Level 2 or Level 3 accident investigation to record the relevant crash characteristics. Automobile insurance carriers are another source of information. Allstate Insurance offers premium discounts for air bag-equipped vehicles and believes it insures a high proportion of the existing air bag vehicle population. In addition, Allstate operates its own fleet of approximately 475 air bag vehicles. Allstate also maintains its own 24-hour phone service for reporting air bag accidents, and drivers in their fleet are instructed to report all accidents. Insurance claims on policies covering air bag-equipped cars are monitored, and the Chicago police cooperate by reporting any air bag deployments they encounter. Identified Allstate fleet accidents are investigated by Allstate, and all air bag crashes are reported to the NHTSA. Car manufacturers and other insurance companies also cooperate with Allstate in air bag vehicle accident reporting.

There is currently only one passive belt implementation in actual production. This is the Volkswagen Rabbit passive shoulder belt system which has been an option since the 1975 model year. Volkswagen instructs its dealers to report Rabbit accidents to the main office when the damage cost is above a threshold quantity (approximately $700) and then sends out investigators to collect data on the accident. Volkswagen will then notify the Accident Investigation Division of NHTSA about the accident. This is the only accident tracking procedure known of for passive belts.

The present plans are to manufacture 450,000 air bag-equipped automobiles in the 1980, 1981 model years. A more extensive tracking system must be designed to collect data on the future increased number of air bag vehicle accidents.

Additional NCSS-type Towaway Accident Data

The number of cases available from the NCSS data collection effort is not expected to be totally sufficient for the analysis of FMVSS 214. It is necessary, therefore, to collect additional accident data with a similar level of detail to obtain more cases in those categories which are underrepresented in NCSS. The initial analysis of NCSS will give a first estimate of the effectiveness of the Standard. Using this estimate and the desired confidence level, one can then determine the absolute number of additional cases required. If the effectiveness is greater in a speed range, or for some other set of conditions,

subsequent data collection could be explicitly targeted, thus requiring fewer observations. The new data collection sites should be the same eight areas as the earlier NCSS data collection--Western New York, Michigan, Miami, San Antonio, other areas in Texas, Kentucky, Indiana, and Los Angeles. The accidents of most concern will be urban and suburban, front-side collisions occurring at relatively low speeds. It is expected that the results of the initial NCSS data analysis will confirm this requirement. If the data collection effort lasts one year, an average of 375 to 625 cases per site will be required.

Towaway Accident Data (Towtruck Operator Sites)

Two proposed analyses, one for evaluating FMVSS 215 and one for FMVSS 301 require data which would be collected at police-designated towtruck operator sites. For FMVSS 215, data will be collected with the cooperation of police-designated towtruck operators. The data will be collected over a period of a year at a sufficient number of locations to accumulate about 2000 bumper cases during that time period. The site could include NCSS data collection areas and also would preferably be located in states such as New York and Texas which have automated mass accident data bases. The following basic information on each towaway accident involving front and rear collisions is required:

- Vehicle model year
- Vehicle make/model
- Reason for towing (to insure that an accident is involved)
- Front/rear bumper involvement
- Location of accident.

In addition to the information for each front/rear towaway accident, a count is required of the total number of towaway accidents handled by the towtruck operators.

For FMVSS 301, more detailed information will be needed, requiring trained investigators. The fuel system components to be tested for rupture are:

- Gasoline cap
- Filler pipe connector
- Gasoline tank
- Fuel line and connectors
- Fuel pump
- Carburetor
- Vapor control carbon canister

The acquisition of fuel system rupture data in towaway accidents must address the following considerations:

- Selection of sample regions.
- Securing cooperation of police and police-designated towtruck operators.
- Preparation of data forms and training of investigator/technician.
- Requirements of sample size and length of study.

Data will be collected with the cooperation of both the police and police-designated towtruck operators. The ability to secure such cooperation will influence the selection of sample sites. It may be advantageous to locate the sample regions in National Crash Severity Study (NCSS) data collection areas.

Restraint System Usage Survey

Estimates of restraint system usage are necessary if one wishes to project the total number of deaths and injuries avoided due to FMVSS 208. Previous studies of restraint usage have been done and this data collection would differ in the following ways:

- Two-person teams to observe and record the information.
- Broader range of highway types, including on-the-highway observation and accompanying police on random roadside vehicle inspection.
- Collection of data in the same geographic areas as RSEP data: Western New York, Michigan, Miami, San Antonio, rural Texas, and Los Angeles.
- Interview followups on a sample of observations to gain additional information on trip type and length and consistency of belt usage and also to check overall data collection accuracy.

The number of observations required depends on the desired accuracy of the estimate and the frequency of occurrence of the desired event.

Car Owner Survey (Low Speed Accidents)

The survey of vehicle owners is designed to collect data which will permit a study of cars with and without bumpers that meet the requirements of FMVSS 215. Specifically, the analysis of data will be directed toward determining the frequency of collisions and the level of damage (including no-damage) at low speeds. The survey of car owners should be designed to determine information on vehicle accidents which occurred during the prior six months. The information required for each accident is:

- Vehicle year
- Vehicle make/model
- Type of collision
- Amount of damage, including none
- Damage repaired or not
- Towing of car required or not.

The first two above items will be known and will be part of the basis for selecting the owner in the survey. The questionnaire must be clearly worded so that the respondent will realize that he or she is to include very minor collisions, such as "bumps" which resulted in little or no damage.

The data acquisition, which is assumed to be undertaken by a company with survey data collection experience and competence, must address the following considerations:

- Means of survey data collection - mail and/or phone
- Representative sampling
- Sequence of sampling - pilot study
- Response rates and sample size requirements.

Survey data of the type required in this study could (at least in principle) be collected by either phone or mail. However, in our judgment, the amount of information required and the time for reflection on the part of the respondent that is needed to assure a valid answer, would dictate a mail survey.

5.3 Statistical Techniques

The statistical techniques needed in the evaluation of the four Standards for each data source are displayed in Table 5-2. Descriptions of the applications of each technique follow:

Contingency Table Analysis

Contingency table analysis is used for evaluating all four Standards, whenever the attributes of the populations to be compared are categorical and the question of a significant difference between the two populations is under examination. This corresponds in most cases to a comparison of pre- and post-Standard cars with respect to a related performance criterion (e.g., occupant injury).

In the case of FMVSS 214, mass state accident data are to be analyzed, using contingency table analysis to determine if any significant vehicle age effects or other non-side-beam-related effects are present. The analysis procedure to be followed can be illustrated with reference to Table 5-3 and Figure 5-1. In this illustrative discussion, the factors of driver age and model year are being "controlled for"; all cases are limited to a given category. For example, the driver age category might be under 25 years old and model year could be 1970.

In the notation in Table 5-3, m is a frequency count of drivers injured and n is count of drivers not injured. In the instance of impact analysis, m is a frequency count of side impacts and n is a count of other impacts. The subscript refers to the vehicle age, i.e., zero indicates less than one year old. The superscripts refer to the vehicle category and whether the struck car contained side beams. Thus, for example, A_{NS} is vehicle category A without side beams. No weight subclassification was needed for Category A. The superscript $1B_S$ refers to the first weight subcategory of vehicle Category B and side beams present in the struck vehicle.

The cube shown in Figure 5-1 illustrates the fact that the accident data with and without side beams will be analyzed separately. For simplicity, only primary vehicle categories A through E are shown, without the weight subdivisions. Six categories of vehicle age are shown. For each cell in the cube, stratified according to side beams, a frequency count will be made of injured and uninjured drivers for a given vehicle age and vehicle category.

The contingency table analysis will proceed as follows: Analyses will be performed separately for the side beam and non-side beam samples. Consider a given row of Table 5-3 for either side beams of no side beams. If there were no effect of vehicle category for a given vehicle age, it would be expected that

$$\left(\frac{m}{m+n}\right)_A \cong \left(\frac{m}{m+n}\right)_{1B} \cong \left(\frac{m}{m+n}\right)_{2B} \cong \cdots \quad .$$

That is, the ratio of injured drivers to total drivers will not change significantly among vehicle categories. A comparison can be made of the observed and expected number of injuries in each category, where the expected number of injuries is simply the proportion of injuries that would be expected if there were no effects among vehicle categories. For a given cell i, expected injuries E_i are obtained from

STATISTICAL TECHNIQUES USED IN ANALYSES

Data Bases		Federal Motor Vehicle Safety Standards			
		FMVSS 214: Side Door Strength	FMVSS 215: Exterior Protection (Bumpers)	FMVSS 301: Fuel System Integrity	FMVSS 208: Occupant Crash Protection
Automated Existing Data Bases	State Accident Data	• Contingency Table Analysis	• Contingency Table Analysis • Heuristic Analysis	• Contingency Table Analysis - Likelihood Ratio Tests	
	NCSS (Towaway)	• Regression Analysis, including Analysis of Covariance • Log-linear Model & Contingency Table Anal. • Index Analysis • Heuristic Analysis			• Regression Analysis, including Analysis of Covariance • Log-linear Model & Contingency Table Anal. • Index Analysis • Heuristic Analysis
	RSEP (Towaway)				(Same as above for NCSS data.)
	FARS			• Contingency Table Analysis - Likelihood Ratio Tests • Trend Analysis	
	HLDI		• Comparison of Truncated Log-Normal Distributions		
Non-Automated Existing Data Bases	State Farm Insurance Data		• Contingency Table Analysis • Heuristic Analysis		
	Fire/Police Department Data			• Contingency Table Analysis - Likelihood Ratio Tests • Heuristic Analysis	
	Passive Restraint Tracking System				(Same as above for NCSS & RSEP data.)
New Data Collection	Additional NCSS Type Data (Towaway)	(Same as above for NCSS data.)			
	Additional Passive Restraint Tracking System				(Same as above for NCSS & RSEP data.)
	Restraint System Usage Survey				• Heuristic Analysis
	Bumper Accident Car Owner Survey		• Contingency Table Analysis • Heuristic Analysis		
	Towaway Accident Survey (Tow truck operator sites)		• Contingency Table Analysis • Heuristic Analysis	• Contingency Table Analysis • Trend Analysis	

TABLE 5-3

SIMPLIFIED CONTINGENCY TABLE ANALYSIS

Vehicle Age	Vehicle Category												
	A_{NS}		A_S		$1B_{NS}$		$1B_S$		$2B_{NS}$		$2B_S$		
0	A_{NS} m_o	A_{NS} n_o	A_S m_o	A_S n_o	$1B_{NS}$ m_o	$1B_{NS}$ n_o	$1B_S$ m_o	$1B_S$ n_o	$2B_{NS}$ m_o	$2B_{NS}$ n_o	$2B_S$ m_o	$2B_S$ n_o	....
1 - 2	A_{NS} m_1	A_{NS} n_1	A_S m_1	A_S n_1	$1B_{NS}$ m_1	$1B_{NS}$ n_1	$1B_S$ m_1	$1B_S$ n_1	$2B_{NS}$ m_1	$2B_{NS}$ n_1	$2B_S$ m_1	$2B_S$ n_1	....
. . .													

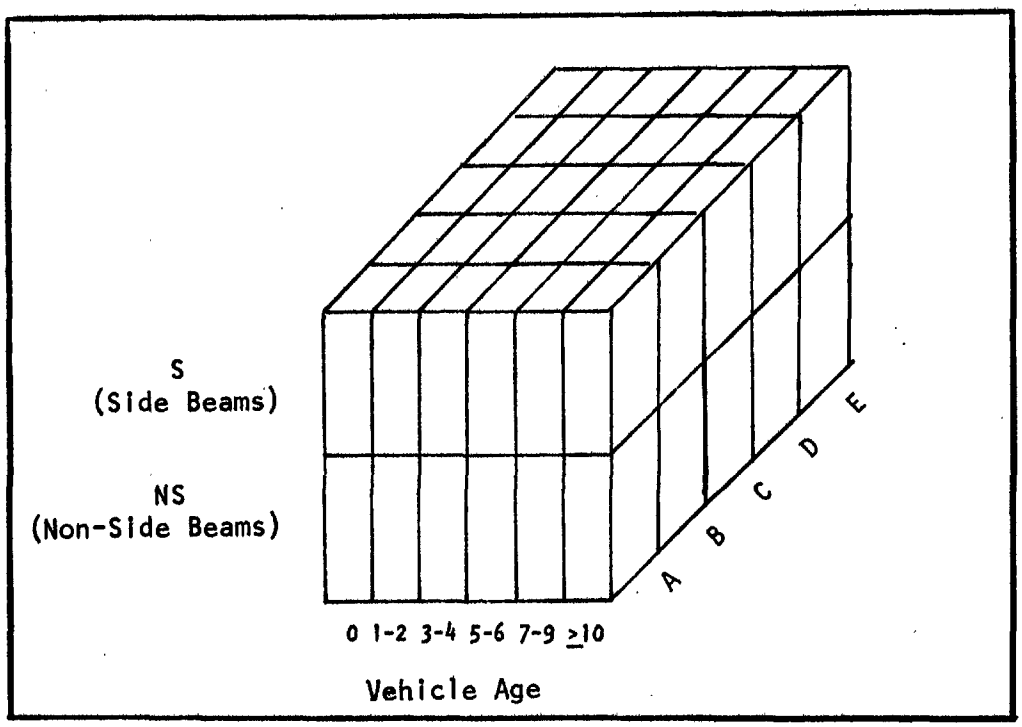

Figure 5-1. Simplified three dimensional analysis of sidebeams presence, vehicle age, and vehicle category.

$$E_i = r \cdot (m_i + n_i) \quad \text{, where}$$

$$r = \frac{\sum^{row} m}{\sum^{row} (m+n)} \quad .$$

The ratio r is the sum of the total driver injuries in the row divided by the sum of the total drivers involved in accidents in the row (i.e., for a given vehicle age). The significance of the differences between the observed and expected injuries ($m_i - E_i$) can be evaluated with a standard Chi-square test. Using the above procedure, the effects of vehicle categories on injuries can be evaluated for each vehicle age class. The identical analytical step as outlined above will also be carried out in the evaluation of side impacts, where, in this case, m is the frequency count of side impacts and n is the count of other impacts.

Using the same approach, an entirely analogous procedure can be undertaken to evaluate the effects of vehicle age. If there were no vehicle age effects, it would be expected that the ratio of injured drivers to total drivers would not change significantly among vehicle age categories within a given vehicle category column,

$$\left(\frac{m}{m+n}\right)_0 \cong \left(\frac{m}{m+n}\right)_{1-2} \cong \left(\frac{m}{m+n}\right)_{3-4} \cdots ,$$

where the subscripts 0, 1-2, and 3-4 indicate the definition of the first three age categories as given in Figure 5-1. The expected number of injuries E_j for a given cell j within a contingency table column illustrated in Table 5-3 would be:

$$E_j = r^1 \cdot (m_j + n_j), \text{ where}$$

$$r^1 = \frac{\sum^{col} m}{\sum^{col} (m+n)} \quad .$$

Again, the significance of the differences between observed and expected injuries ($m_j - E_j$) can be evaluated with a standard Chi-square test. Thus, the effects of vehicle age classes on injuries can be evaluated for each vehicle category. Collision impact effects can be similarly determined.

The same type of contingency table analysis will be used with mass state data for evaluating FMVSS 215. The basic question to be answered is:

- Has there been a shift in the distribution of vehicle damage away from bumper areas?

Answering the above question requires an analysis of the frequency of damage occurrence by area of vehicle. This can most appropriately be undertaken through contingency table analysis. The primary breakdown of area of damage would be front, side and rear. Where data permit, subcategorization of the damage area could be used. The analysis will attempt to determine if the frequency of reported accidents involving bumper systems has changed on new models since 1973 as compared with old models prior to 1973. This would be done to test for the underrepresentation of accidents involving bumpers which meet the requirements of FMVSS 215. If underrepresentation is the case, then it would support the hypothesis that the new bumpers are effective in reducing the damage to vehicles equipped with them.

The comparative analysis of area damage frequency for pre- and post-Standard cars will require several data stratifications and controlling for extraneous effects. The shift (if any) in area damage frequency in the contingency table analysis may be more susceptible to detection if stratification according to damage severity is performed. It is possible that frequency shifts will be detected only in collisions with lesser damage. Additionally, it may be necessary to control for effects due to driver age and/or sex. For example, more younger persons drive older cars and, due to more aggressive driving characteristics,tend to be more frequently involved in front-end collisions. If this is the case, older (and predominately pre-Standard) cars could have a higher frequency of bumper-involved accidents than newer (and predominately post-Standard) cars, but this effect should not be ascribed to the new bumper systems.

The contingency table analysis should also be carried out for data stratified according to market class (subcompact, compact, intermediate, full size, heavy). The effects and effectiveness of the new bumper system may differ between a subcompact and a full-size car. Additionally, there has been a shift in the relative market share of the above five vehicle classes in recent years, and this should be considered in the analysis.

The analysis will initially be carried out separately by accident year. There are several exogeneous factors which might be changing over time. For example, a state may change the minimum dollar amount of damage required for an accident to be reportable. It has been observed in the past that when such reporting limits change, the number of accidents actually reported changes significantly. Exposure is another factor that changes over time. As the economic cycles change, the amount of driving changes correspondingly. If certain types of driving are affected more than others by the economy, the relative occurrence of different accident configurations may change. This would affect a comparison of frequency of accidents by damage area which combined all the accident years together. Depending on the results of the initial analysis, similar accident years may be combined to increase sample size, especially where accidents involving pre-Standard vehicles are infrequent, as is the case with the latest accident data.

Contingency table analysis will also be the primary method used for analyzing other data sources for FMVSS 215. The analysis of State Farm Insurance data will compare the number of cars with bumpers replaced *versus* cars with non-protected parts replaced in pre- *versus* post-Standard cars (or any more detailed categorization). The analysis of the Car Owner Survey will determine if post-Standard bumper cars are involved in a greater percentage of no-damage

or low damage accidents relative to all the accidents in which they are involved, than pre-Standard bumper cars. The analysis of data collected from towtruck operators will determine if vehicles with post-Standard bumpers have a smaller percentage of frontal or rear involvement in towaway accidents. An example of the corresponding contingency table is shown in Figure 5-2 below.

Model Year	Towaway Accident Impact		Total
	Front/Rear	Other	
≤ 1972			
≥ 1973			
Total			

Figure 5-2. Illustration of 2 x 2 contingency table analysis designed to estimate the reduction in front/rear towaway accidents due to the effect of post-Standard bumpers (model year 1973 and later).

There are three separate analyses recommended for evaluating FMVSS 301. They are:

- Analysis of Fuel System Rupture in Towaway Accidents
- Analysis of the Frequency of Fire and Fuel Spillage
- Analysis of Fire-related Fatal Automobile Accidents.

Each uses contingency table analysis to compare pre- and post-Standard 301 vehicles. The first analysis involves a 2 x 2 contingency table analysis with all cases in which obvious aging effects were not observed in the fuel system of the vehicle. The aging effects include pre-existing damage, corrosion, fatigue, crystallization of metal, extensive hardening of rubber or plastic, etc. The 2 x 2 contingency table analysis is outlined in Figure 5-3. A standard χ^2 test would be employed to determine if there is a significant difference in the occurrence of fuel system rupture in pre-Standard *vs.* post-Standard cars.

Model Year Class	Fuel System Integrity		Total
	Rupture	No-Rupture	
Pre-Standard Cars			
Post-Standard Cars			
Total			

Figure 5-3. Contingency Table Analysis for cars without obvious aging effects.

For the second analysis, contingency tables will be constructed according to the differences to be tested. The fundamental measures of the Standard's effectiveness are differences in the ratios of fire-related accidents to all accidents and fuel spillage accidents to all accidents for pre- *versus* post-Standard cars. The analysis will permit the examination of variations of this effect with calendar year, vehicle age and type of impact. Also possible differences as a function of location (state) may be identified.

The third analysis will use mass state accident data for earlier years (pre-1975) and FARS data for subsequent years. A contingency table analysis will be performed according to the table in Figure 5-4 below. Hardcopy fatal files will be used to ascertain the occurrence of fire, which is not available on mass state files. The mass state files will be necessary for information on the non fire-related fatal accidents.

	Fire-Related Fatal Accidents	Non-Fire-Related Fatal Accidents
Pre-Standard Vehicles		
Post-Standard Vehicles		

Figure 5-4. Contingency table for analysis of fire-related fatal accidents.

Analysis of Covariance (ANACOVA)

This method of analysis will be used in evaluating FMVSS 214 and FMVSS 208. For each of the two Standards a multinomial response model has been proposed with both continuous and discrete explanatory variables. Since the model involves a quantitative or regression component and a qualitative or analysis of variance component, the most plausible approach seems to be to consider the setup as an analysis of covariance problem. In using such an approach, the regression portion of the model (i.e., the continuous variables) is fitted by estimating the coefficients of the continuous variables. Then the analysis of variance portion of the model (i.e., the discrete variables) is considered in the presence of these covariates. Package programs are available to handle an ANACOVA of the size we are discussing so that "in principle" the analysis may be performed. Included in these packages are provisions to run significance tests and to obtain confidence intervals for the regression coefficients and also to run significance tests and multiple comparisons for the main and interaction effects. This is the most promising approach for evaluating the effectiveness of side beams in reducing "extent of intrusion."

Analysis of covariance is not as promising an approach when using injury severity (AIS) as the dependent variable as opposed to "extent of intrusion." The problem stems from the fact that ANACOVA assumes the dependent variable to be continuous and normally distributed. This assumption is not valid for the AIS scale. There are other problems of interpretation in using ANACOVA in this case.* An alternative analysis for using injury severity as the dependent

*See discussion on page 4-24 of Task 4 and 5 Report [3].

variable is given in the "log-linear" analysis section. The models proposed for FMVSS 214 and FMVSS 208 are displayed in Figures 5-5 and 5-6, respectively.

Continuous Mean Effects:

- Impacting Speed of the Striking Vehicle
  - Denoted by S and enters quadratically
- Change in Velocity
  - Denoted by ΔV and enters quadratically
- Angle of Impact
  - Denoted by α and enters trigonometrically

Discrete Mean Effects:*

- Seatbelt Status: B - Categorical
- Model Year Group: M - Dichotomous
- Occupant Age: A - Categorical
- Presence of Adjacent Occupant: J - Dichotomous

Recommended Model:

$$\begin{aligned}
\text{Log } p = \mu & \\
& + a_1\Delta V + a_2\Delta V^2 + b_1 S + f_2 S^2 && \text{(continuous)} \\
& + B_i + A_j + M_k + J_\ell && \text{(categorical)} \\
& + c_1\Delta V \sin\alpha + c_2\Delta V \sin 2\alpha + c_3\Delta V \cos\alpha \quad c_4\Delta V^2 \sin\alpha && \left.\begin{matrix}\text{(continuous} \\ \text{interactions)}\end{matrix}\right. \\
& + c_5\Delta V^2 \sin 2\alpha + c_6\Delta V^2 \cos\alpha + d_1 S \sin\alpha + d_2 S^2 \sin\alpha && \\
& + B_i \cos\alpha + M_k \cos\alpha + M'_k \Delta V + J_\ell \sin\alpha && \begin{matrix}\text{(continuous} \\ \text{categorical} \\ \text{interactions)}\end{matrix}
\end{aligned}$$

*The variable list is only illustrative in that the specific variables included will change as the analysis progresses.

Figure 5-5. Multinomial response model for FMVSS 214.

Variable	Type	Definition
ΔV = Change in Velocity	Quadratic	NCSS file definition
I = Impact Point Angle	Angular	See Figure 3-1, Reference [6]
A = Force Angle	Angular	See Figure 3-1, Reference [6]
W = Weight of Case Vehicle	Nominal	Weight categories < 2000 lb, 2000-3000, etc.
M = Model Year Group	Dichotomous	Model Year categories: before 1969, after 1969
G = Age of Occupant	Nominal	Age groups 16-25, 26-35, etc.
S = Sideswipe Variable	Dichotomous	No Sideswipe = 0, Sideswipe = 1

Recommended Model:

$$
\begin{aligned}
\text{Log } p = \; & \mu \\
& + a_1 V + a_2 V^2 && \text{(continuous)} \\
& + w_i + M_j + G_k + S_\ell && \text{(categorical)} \\
& \left.\begin{aligned} & + b_1 \Delta V \cos I + b_2 \Delta V \cos 2I + b_3 \Delta V \cos 3I \\ & + c_1 \Delta V \sin I + c_2 \Delta V \sin 2I + d_1 \Delta V \cos A \\ & + d_2 \Delta V \cos 2A + e_1 \Delta V \sin A + f_1 \Delta V \cos (A+I) \end{aligned}\right\} && \text{(continuous interactions)}
\end{aligned}
$$

where p is the probability of equaling or exceeding a particular AIS level for a particular belt system usage, and

$\mu, a_1, a_2, b_1, b_2 \ldots\ldots, f_1$

are coefficients to be estimated from the data.

Figure 5-6. Multinomial response model for FMVSS 208.

Log-linear Analysis

This technique is an alternative to the ANACOVA analysis described above. It will also be used to evaluate FMVSS 214 and FMVSS 208. It is a preferable approach for using injury severity as the dependent variable because it retains the multinomial character of the dependent variable at a relatively minor sacrifice. If categorization is imposed on ΔV and Angles in the models in Figures 5-5 and 5-6, then a log-linear model may be fitted to the data. The log-linear model assumes a higher order contingency table type categorization with respect to the observed independent variables and a dichotomous response for the dependent variable. The logarithm of the probability of one of these responses is given a linear representation in terms of the levels (categories) of the independent variables. The model then only requires that at a given set of levels for these variables, observed responses follow a binomial model with the corresponding model-specified probability of occurrence. The model we have given need only be amended with respect to the continuous portion.

In the evaluation of FMVSS 214, log-linear analysis will be used to detect differences in the probability of occupant injury less than or equal to a given severity, in side beam *versus* non-side beam cars. The data used will be existing NCSS data and any additional NCSS-type data obtained in a new data collection effort. In the evaluation of FMVSS 208, this analysis will be used to detect differences in the probability of occupant injury less than or equal to a given severity, as a function of the restraint used. In seat belt equipped vehicles this results in the following stratifications:

- Lap belt only used
- Lap/shoulder belt used
- No restraint used.

In air bag equipped vehicles the stratifications will be:

- Air bag deployment with lap belt used
- Air bag deployment without lap belt used
- Air bag non-deployment with lap belt used
- Air bag non-deployment without lap belt used.

In passive belt equipped vehicles the stratifications will be:

- Passive belt used
- Passive belt not used.

NCSS data, RSEP data and Passive Tracking System data will be included in these analyses. A flow chart of the proposed analysis schemes appears in Figure 5-7 at the end of this subsection.*

Index Analysis

A third procedure has been proposed to compare the protection afforded by the three categories of seat belt usage. Let P_N^3 denote the probability of injury at least as severe as AIS = 3 (i.e., AIS ≥ 3) when the driver is not using seat belts. Let P_L^3 and P_S^3 be the corresponding probabilities with lap belts and shoulder/lap belts, respectively. We propose the index

$$I^3(L,N) = \log_2 \frac{P_N^3}{P_L^3}$$

as a measure of the improved protection of lap belts over no belts for AIS $\geq$ 3.** For other injury levels the definition is similar. This index has several desirable properties. If the probability of injury is the same, $P_N^3 = P_L^3$, then I^3 (L,N) = 0. Should lap belts decrease the probability by 1/2, then $P_L^3 = 1/2\ P_N^3$ and

$$I^3(L,N) = \log_2 2 = 1.$$

*Flowcharts of other selected analyses are presented in Appendix I.

**The choice of the base for the logarithm is arbitrary. Base 2 was chosen because it is conceptually desirable for differences on the order of 0.5, e.g., between belts and no belts. Log_e would be conceptually more desirable for small differences because it would correspond to percentage differences. Preference in choice of base for the logarithm can be investigated further when performing the analysis.

Conversely, if no use of belts decreases the probability by 1/2, then $P_N^3 = 1/2\ P_L^3$, and

$$I^3(L,N) = \log_2 1/2 = -1.$$

Furthermore, the index is additive in the following sense. If $I^3(L,N) = 1.8$ and $I^3(S,L) = 0.5$, then

$$I^3(S,N) = 2.3.$$

Also, note that order is important: $I^3(L,N) = -I^3(N,L)$.

Since the estimates of the injury probabilities are functions of the independent variables, the indices are also functions of these variables. This is desirable because any improvement due to seat belts would not be expected to be uniform across all situations.

Trend Analysis

The physical condition of a vehicle's fuel system prior to an accident will affect the probability of that system's rupturing in a collision. The analysis of FMVSS 301 will attempt to isolate vehicles with serious aging effects which are defined as a pre-existing condition of the fuel system that would greatly increase the likelihood of rupture. Two separate trend analyses will be performed with data from towed vehicles. The first step consists of a relatively simple analysis of the frequency of occurrence of observable aging effects by model year. Obviously, the entire sample of cars with and without aging effects is to be utilized. The analysis is designed to identify discontinuities and/or changes in the trend of the occurrence of obvious aging effects of fuel system components by car age (i.e., model year). The detection of such an effect, if relatable to the Standard, could indicate that improvements in the materials used to comply with the Standard have reduced the aging effects of corrosion, fatigue, etc.

The second analysis is a trend analysis of the occurrence of fuel system rupture in cases with significant observable aging effects. The trend analysis is designed to identify discontinuities and/or changes of slope in the trend of rupture (by model year) in accidents where there are obvious aging effects in the fuel system components.

Likelihood Ratio Tests

If the trend analyses described above discern a significant age effect in the likelihood of fuel system rupture, the nature of that effect must be considered in the subsequent analyses of FMVSS 301. If the age effect can be realistically divided into two or three discrete categories, then a standard contingency table analysis can be used. If, however, vehicle age must be included as a continuous linear variable, then a likelihood ratio test should replace the contingency table analysis.

Comparison of Truncated Log Normal Distributions

This analysis approach for FMVSS 215 is intended for Highway Loss Data Institute (HLDI) repair cost data to determine whether repair cost distributions differ between pre- and post-Standard bumper vehicles. Two methods are described which differ in that the first develops statistical estimates of the character of the truncated distributions and compares these estimates. The second compares the distributions within intervals. This latter method is the more powerful, given large sample sizes. It is appropriate to note here that success in delineating the effectiveness of FMVSS 215 by either of these methods is speculative.

Outline of Approach 1: Suppose each of two sets of samples is taken from a truncated log normal distribution. The assumption of a functional form for the distribution enables estimation (maximum likelihood or method of moments) of the parameters of each distribution. However, the development of a test statistic for the comparison of samples must be *ad hoc* because of the absence of a large sample distribution theory for these estimators. This approach is preferred for estimation of parameters.

Outline of Approach 2: Suppose the samples are censored--that is, for the ith population ($i = 1, 2$), a total of N_i observations (accidents) is taken, but only M_i are uncensored (i.e., M_i actual repair costs are observed and the remainder are censored by the current value of the car). This corresponds to developing tests based on the first M_1 order statistics from the first sample and the first M_2 order statistics from the second sample. Nonparametric procedures using Generalized Wilcoxon test statistics are available to compare the population under this arrangement, and these test statistics are known to be asymptotically normal. Since no functional form is specified, estimation must be confined to percentiles (i.e., medians, quartiles, etc.). This approach is intended to test the hypothesis of no difference between repair cost distributions for pre-Standard and post-Standard cars.

Heuristic Analyses

Heuristic analyses as described in this report refer to non-rigorous tabulations of available data to help the analysts decide which alternatives are the most promising as the research progresses. This could include simple tests of data homogeneity or stratified tabulations of the data to determine how many sample points fall into each category.

One important such analysis will be done with the results of the restraint system usage survey. The analysis of the restraint system usage data would be rudimentary, primarily examining various patterns of usage through different tabulations. The tabulations of most interest will be seat belt usage *versus*:

- Age
- Sex
- Rural/urban
- Restraint system
- Vehicle class.

and possibly combinations of these with other variables. Simple tests of independence should be made to determine whether estimates are significantly different from one another.

The main questions addressed will be whether this study (1) finds any difference from earlier studies and (2) finds substantial differences between categories which had not been established before, such as rural/urban usage, or by trip type.

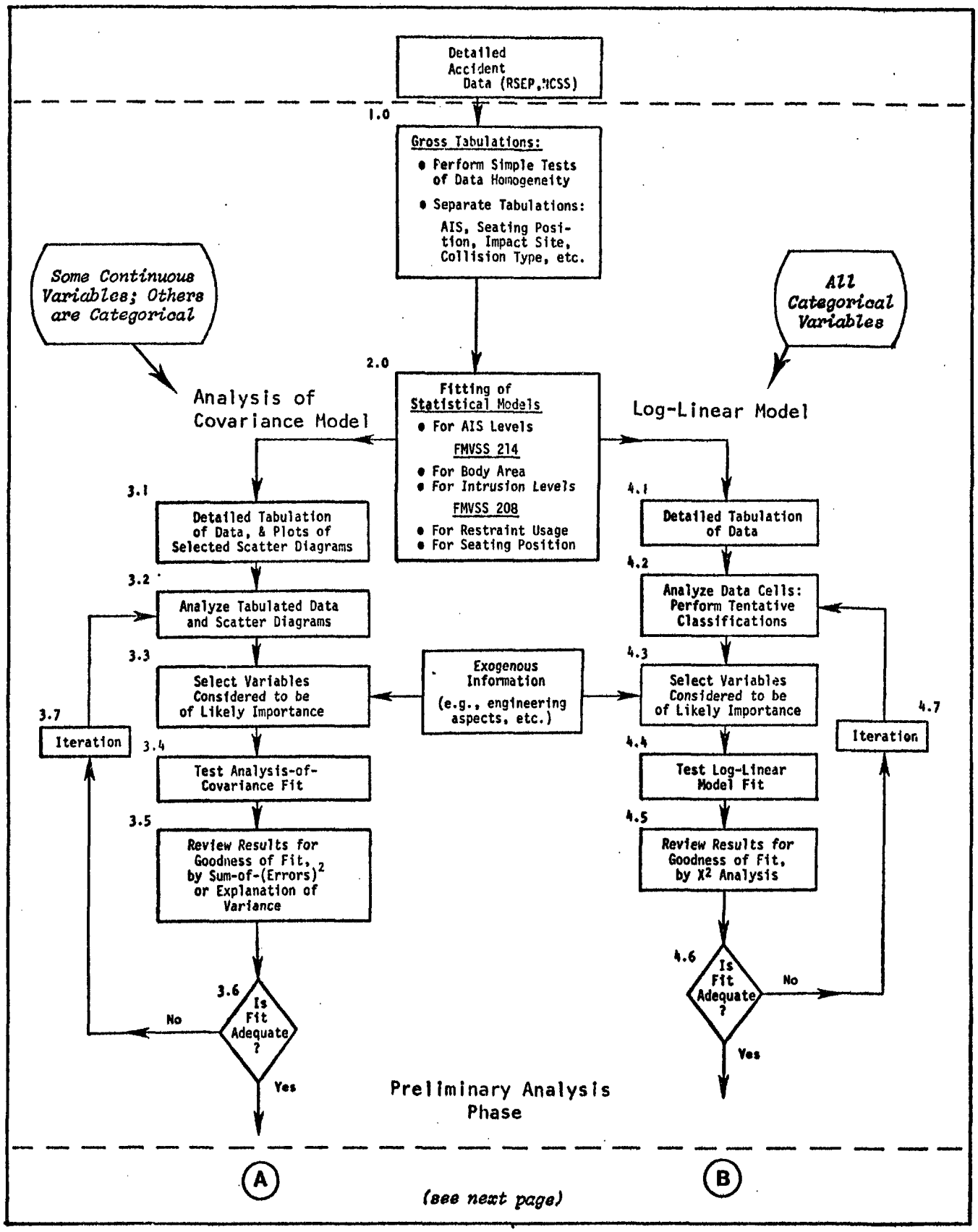

Figure 5-7. Statistical Analysis Scheme for evaluating FMVSS 214 and FMVSS 208.

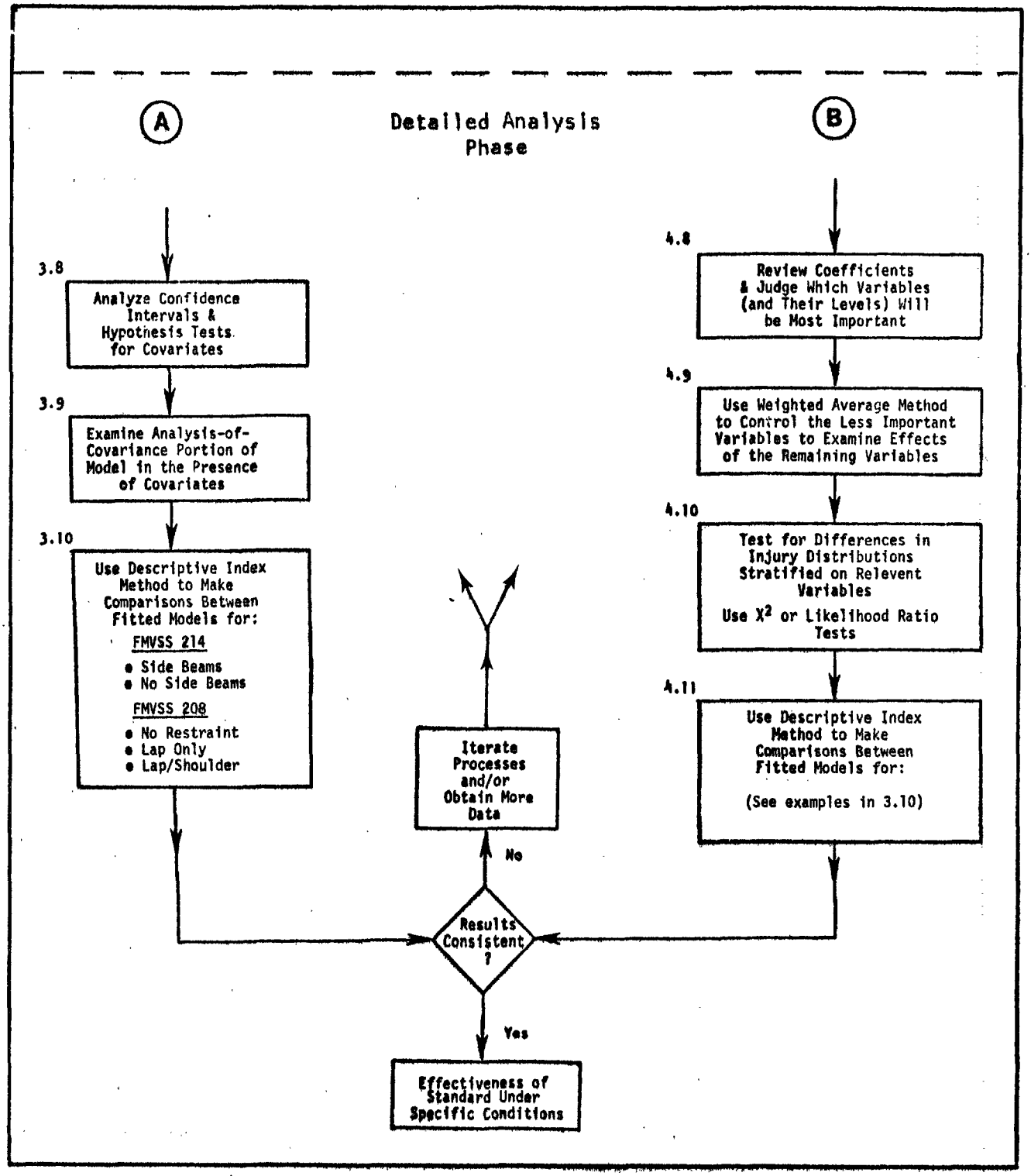

Figure 5-7. (Continued)

5.4 Hardware Cost Data Acquisition

This subsection presents a plan to collect hardware costs on vehicle components which are affected by the Standards. It will consider only components which are directly affected, not associated design changes. Each Standard will be discussed separately, first with a description of relevant cost items and then a suggested cost sampling plan. The sampling plans give examples of specific car models to sample which are based on the particular components involved. The examples presented are intended as a descriptive device rather than a formal recommendation. After specific manufacturer/make/model to sample have been decided upon for each Standard, the four plans could be combined into one integrated cost sampling plan. This last task is beyond the scope of this study. More detailed descriptions of the cost sampling plans may be found in each Standard's Task 4 and 5 report [3], [4], [5], [6].

5.4.1 FMVSS 214

FMVSS 214 was introduced in October 1970 with an effective date of January 1, 1973. Manufacturers had been installing side door guard rails in some cars since the 1969 model year. Figure 5-8 shows the incremental design changes used to meet the Standard. The door beams are approximately eight inches high, two inches deep and run from hinge to lock pillar on every door. They are parallel to and approximately 10 inches above the lower door sill. The pillar support is for local reinforcement for the door pillar. Therefore, the two primary physical items which are introduced to satisfy the Standard are the side beams and the pillar supports. The side beams themselves are made up of several components. The minimum components are the channel beam and the end plates. Domestic models have corrugated sheet metal for additional reinforcing and in vehicles with wide doors a center plate may be added. The pillar to floor reinforcement is not required on 2-door sedans.

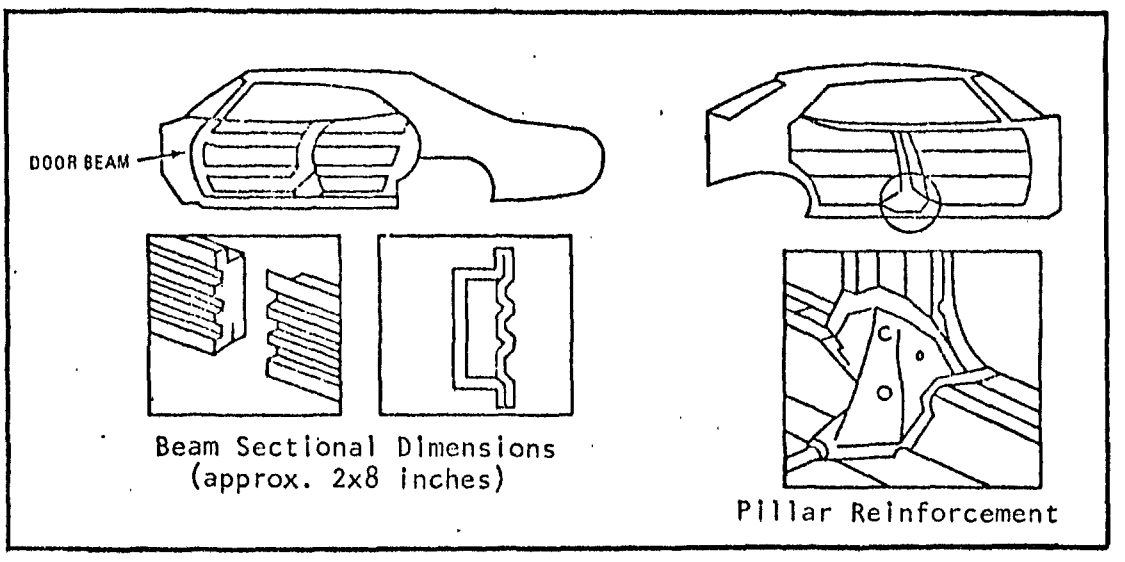

Figure 5-8. Sketches of design changes required for FMVSS 214.*

*Source: *Benefit and Cost Analysis Methodology*. Reference [7].

Since side door guard beams are the universal method of compliance throughout the industry, cost variations among manufacturers should be less for FMVSS 214 than for the other three Standards this project will review. We do expect real differences according to body styles and car classes. For example, the cost of four short beams in a 4-door sedan should differ from the two longer beams in a 2-door hardtop. Similarly, we expect the cost of a large luxury car's side beam to differ from a subcompact's side beam. For these reasons, we propose a three-dimensional categorization for cost data acquisition.

Exhaustive Cost Acquisition Plan:

1. Manufacturer: GM, Ford, Chrysler, AMC, Volkswagen, Toyota.

2. Market Class: Subcompact, Compact, Intermediate, Full Size, Luxury, Specialty.

3. Body Type: 2-Door Hardtop, 2-Door Sedan, 4-Door Hardtop, 4-Door Sedan, 2-Door Hatchback, 4-Door Station Wagon.*

A sample Latin Square Design is given in Figure 5-9 below for analyzing cost data.

Manufacturer	Sub-comp.	Com-pact	Inter-med.	Full Size	Lux-ury	Spec-ialty
GM	A	B	C	D	E	F
Ford	B	F	D	C	A	E
Chrysler	C	D	E	F	B	A
AMC	D	A	F	E	C	B
Volkswagen	E	C	A	B	F	D
Toyota	F	E	B	A	D	C

Note: A, B,...F represent body styles

Figure 5-9. Sample Latin Square Design for FMVSS 214 cost data acquisition.

5.4.2 FMVSS 215

The relevant cost items affected by FMVSS 215 are:

- Front Bumper System:

License Plate Bracket
Bumper Guards with Protective Strips
Face Bar
Face Bar Impact Strip
Face Bar Reinforcement
Energy Absorbers
Bumper Spring Assembly
Filler Panel
Frame Mounting Brackets
Bumper Valance
Air Deflector
Brackets, Braces, Insulators, Sight Shields, Spacers

*Additional investigation may show whether this classification can be further aggregated.

- Rear Bumper System:

License Bracket	Energy Absorbers
Bumper Guards with Pads	Frame Mounting Brackets
Face Bar Protective Strip	Filler or Valance Panel
Face Bar	Heat Shield
Face Bar Reinforcement	Brackets, spacers, etc.

In the case of the soft-face bumper system, the components front and rear are:

- Fascia skin
- Elastomeric energy absorbers
- Steel backing beam.

Manufacturers will generally use the same bumper construction for all their car lines, although there may be changes from year to year. There do exist significant implementation differences among manufacturers. These differences will increase the variance of estimates for the cost of complying with FMVSS 215. Although the individual manufacturer will use the same bumper construction on virtually all models, the cost will vary with car size. We, therefore, propose that cost data be stratified by market class and manufacturers, as follows:

1. Manufacturer: GM, Ford, Chrysler, AMC, VW, Datsun.

2. Market Class: Subcompact, Compact, Intermediate, Full Size, Luxury, Specialty.

The recommended experimental design is shown in Table 5-4 below.

TABLE 5-4

SAMPLE EXPERIMENTAL DESIGN FOR FMVSS 215 COST DATA ACQUISITION

Market Class	Replication 1	Replication 2
Subcompact	VW	GM
Compact	Chrysler	GM
Intermediate	GM	AMC
Full Size	Ford	Chrysler
Luxury	GM	Ford
Specialty	Ford	Datsun

5.4.3 FMVSS 301

The vehicle components which are a part of the fuel system, and thereby affected by FMVSS 301, are listed in Table 5-5 below. Costs relating to changes in these items which were made as a result of FMVSS 301 should be included.

TABLE 5-5

VEHICLE COMPONENTS AFFECTED BY FMVSS 301

Fuel Tank Fuel Tank Filler Fuel Filler Cap Fuel Tank Connection with Fuel and Vent Lines Fuel Tank Straps and Anchor Points Fuel Line Fuel Line Connections Vent Line Vent Line Connections
Carburetor Fuel Pump Fuel Filter Connections and Mountings

Automobile fuel system configurations vary considerably among manufacturers, makes, and model years. The Standard specifies maximum allowable leakage in a crash without defining specifications for particular fuel system components. Therefore, each manufacturer may or may not have changed various vehicle components as a result of FMVSS 301. This would make it very expensive and inefficient to collect cost data on each fuel system component. Fuel system cost data should be acquired from manufacturers stratified by market class, but in the aggregate for the model's complete fuel system. The recommended experimental design with a sample allocation of manufacturers to market classes is shown in Table 5-6 below.

TABLE 5-6

SAMPLE EXPERIMENTAL DESIGN FOR FMVSS 301 COST DATA ACQUISITION

Market Class	Replication 1	Replication 2
Subcompact	VW	GM
Compact	Chrysler	Ford
Intermediate	AMC	GM
Full Size	Ford	Chrysler
Luxury	GM	Mercedes
Specialty	GM	Ford
Multipurpose	Chrysler	GM

*Fuel system costs and modifications for multipurpose vehicles may be significantly different from passenger cars.

5.4.4 FMVSS 208

The major components of the active and passive belt systems and the passive air cushion system are summarized in Table 5-7 below. Costs relating to these items should be included.

TABLE 5-7

MAJOR COMPONENTS OF COMPLIANCE APPROACHES TO FMVSS 208

Passive Air Cushion Approach [8,9]
Driver air cushion and inflator assembly Passenger air cushion Air tank and inflator assembly Driver and passenger knee restraints Dashboard indicator warning light Dashboard sensor Front bumper detector Lap belts at all designated seat positions Lap belt anchors
Passive Upper Torso Belt Approach [10]
Knee restrainer panel Single upper torso belt in front outboard positions Automatic belt retractor Floor anchors for belt retractor Seat belt warning system Reinforced anchorage on side doors for upper torso belts Lap belts for designated rear seat positions Rear seat belt anchors
Active Type 2 Lap/Shoulder Belt Approach [11,12]
Seat belt warning system Two 3-point lap/shoulder belts for front outboard positions Lap belts for other designated seating positions Shoulder harness retractors Lap belt retractors Floor anchors for retractors and belts

FMVSS 208 has changed through the years and manufacturers' methods of compliance have changed in response. For cost data acquisition for active systems, we are concerned only with implementations that are currently in production, which eliminates from consideration all but the three-point combination lap/shoulder belt for outboard front seat occupants. Within each manufacturer there are three safety belt configurations, depending on the size of the vehicle:

- Four seater - 2 lap/shoulder belts in front
  2 lap belts in rear
- Five seater - 2 lap/shoulder belts in front
  3 lap belts in rear
- Six seater - 2 lap/shoulder belts (outboard);1 lap-belt (center) in front
  3 lap belts in rear.

All the current lap/shoulder belts in production use one or both of the following inertia activated systems:

- Mechanical locking activated by electronic vehicle deceleration sensor.
- Totally mechanical locking activated by sudden pulling action on belt.

We will assume for cost purposes that all manufacturers use basically the same locking retractor system for lap belts. The experimental design shown in Table 5-8 is a balanced incomplete block design which is also balanced for the effect of inertia reel system.

Manufacturers I to IV are the four major U.S. companies: GM, Ford, Chrysler, and AMC. Manufacturers V and VI are foreign companies chosen on the basis of volume or possibly a unique restraint system. The assignment of manufacturers to specific columns is arbitrary and may be rearranged according to appropriate car production configurations. For those manufacturers which use only one type of inertia reel, both cost entries may be taken from the corresponding configuration type. For example, if Manufacturer I uses only inertia system "A," both 4 seat and 5 seat costs may be entered using "A" system costs. If a manufacturer produces more than one model with identical seating configurations and the restraint system costs differ, the model with the largest sales volume may be chosen.

TABLE 5-8

BALANCED INCOMPLETE BLOCK DESIGN FOR SAFETY BELT COST DATA ACQUISITION

Configuration	Manufacturer					
	I	II	III	IV	V	VI
4 Seats	A			B	A	B
5 Seats	B	A	B	A		
6 Seats		B	A		B	A

- A = Electrically activated inertia reel.
- B = Mechanically activated inertia reel.

The cost data acquisition plan in Table 5-8 is only intended for implementations that fall into FMVSS 208 - Option 3. There are only two current implementations which fall into Option 2. The Volkswagen Rabbit passive belt and the General Motors ACRS air bag/lap belt system. Both are unique enough to justify separate cost data acquisition and analysis.

5.5 References for Section 5

1. Highway Loss Data Institute, *Automobile Insurance Losses Collision Coverages, Variations by Make and Series, 1973 Models*, 1974.

2. Sorenson, W. W., R. E. Gardner, and J. Casassa, "Patterns of Automobile Crash Damage," *Automotive Engineering Congress*, Detroit, Michigan, February 25-March 1, 1974. SAE 740065

3. CEM Report 4207-564: "Final Design and Implementation Plan for Evaluating the Effectiveness of FMVSS 214: Side Door Strength,"Tasks #4 & #5 Report (Report #6), January 1977.

4. CEM Report 4207-565: "Final Design and Implementation Plan for Evaluating the Effectiveness of FMVSS 215: Exterior Protection," Tasks #4 & #5 Report (Report #7), February 1977.

5. CEM Report 4207-566: "Final Design and Implementation Plan for Evaluating the Effectiveness of FMVSS 301: Fuel System Integrity," Tasks #4 & #5 Report (Report #8), February 1977.

6. CEM Report 4207-567: "Final Design and Implementation Plan for Evaluating the Effectiveness of FMVSS 208: Occupant Crash Protection," Tasks #4 and #5 Report (Report #9), March 1977.

7. National Highway Traffic Safety Administration, *Benefit and Cost Analysis Methodology - MVP Rulemaking Programs*, Technical Report, August 1972.

8. Anonymous, *1973 Report on Progress in Areas of Public Concern*, General Motors Technical Center, February 1973.

9. Anonymous, *Automotive Air Bags, Questions and Answers*, Allstate Insurance Company, July 1976.

10. Cooke, C., *Consumer Cost of Occupant Crash Protection Systems*, Motor Vehicle Programs, National Highway Traffic Safety Administration, July 1976.

11. Anonymous, *Toyota Seat Belt System Repair Manual for 1974 Models*, Toyota Motor Sales Co., LTD., August 1973.

12. Anonymous, *Ford 1974 Shop Manual, Volume 4 - Body*, Ford Marketing Corporation, February 1974.

6.0 IMPLEMENTATION PLAN

6.1 Introduction

Three implementation plans for the evaluation of FMVSS 214, FMVSS 215, FMVSS 301 and FMVSS 208 are presented in this section. In developing the three plans, varying emphasis was placed on the following five considerations:

(1) Schedule tasks which require existing data first.

(2) Smooth out budget requirements, but spend more in first two years than in last two years.

(3) Schedule field collection of new data last.

(4) Obtain definitive conclusions on Standard effectiveness as soon as possible.

(5) Consider probability of obtaining useable results in ordering tasks.

Obviously, all of the above five considerations can not be satisfied simultaneously. In the discussions that follow, the principal rationale and considerations that underlie each of the three plans are given. The three implementation plans that are compared in this section are the following:

- Early Results, Non-Integrated Plan
- Integrated, Reduced Cost Plan
- Early Results and Equalized Funding Plan.

The total resources required to evaluate the four Standards are given in Table 6-1. The three categories of resource requirements are personnel, data processing and other costs such as data collection, personnel training and survey mailings. An overall dollar cost is obtained by assuming $50,000 would be required for each person-year needed on a task. The overall costs for evaluating FMVSS 301 and FMVSS 208 are considerably higher than the estimated costs of the FMVSS 214 and FMVSS 215 evaluations. A significant portion of the total cost of evaluating FMVSS 301 and FMVSS 208 (about $600,000 needed for each Standard) is due to requirements for collecting new data. Three tasks, each estimated to require about $250,000, involve extensive data collection: analysis of fuel system rupture (FMVSS 301); analysis of passive system effectiveness (FMVSS 208); and analysis of seat belt usage (FMVSS 208).

The more limited requirements for new data collection are largely responsible for keeping the estimated costs for evaluating FMVSS 214 under $500,000, and the estimated costs for evaluation of FMVSS 215 are less than $350,000 for the same reason.

The total resources needed to evaluate the four Standards are estimated to be slightly in excess of two million dollars. This estimate is obtained from personnel requirements of 35.1 person-years (at $50,000 per person-year), $49,000 for data processing and $204,000 for other costs, mainly resulting from the data collection and acquisition efforts.

TABLE 6-1

RESOURCES REQUIRED FOR EVALUATION OF STANDARDS

Federal Motor Vehicle Safety Standard	Task	Resources Required			Total Cost ($000)
		Person-Years	Data Processing ($000)	Other Costs ($000)	
FMVSS 214: Side Door Strength	1. Mass Accident Data Analysis	1.0	5		55
	2. NCSS Data Analysis	2.0	8		108
	3. Field Accident (towaway) (NCSS type)	5.0	5	10	265
	4. Hardware Cost Analysis	1.0	1		51
		9.0	19	10	479
FMVSS 215: Exterior Protection	1. State Farm Insurance Data Analysis	0.5	1		26
	2. Mass Accident Data Analysis	0.5	3		28
	3. HLDI Data Analysis	0.5	1		26
	4. Car Owner Survey	1.6	3	65	148
	5. Towaway Survey	0.5	1	30	56
	6. Hardware Cost Analysis	1.0	1		51
		4.6	10	95	335
FMVSS 301: Fuel System Integrity	1. Fuel System Rupture (towaway)	4.5	2	13	240
	2. Fire/Fuel Spillage Analysis (Fire Dept.)	2.5	3	10	138
	3. Fire-Related Fatalities (State & FARS Fatal Accident Data)	3.0	4	10	164
	4. Hardware Cost Analysis	1.0	1		51
		11.0	10	33	593
FMVSS 208: Occupant Crash Protection	1. Seat Belt Effectiveness Analysis (RSEP/NCSS)	1.0	2	1	53
	2. Passive System Effectiveness Analysis (Existing & Future Data)	4.0	5	50	255
	3. Seat Belt Usage Survey	4.5	2	15	242
	4. Hardware Cost Analysis	1.0	1		51
		10.5	10	66	601
Total Cost		35.1	49	204	2008

The annual funding required throughout a four year period for each of the three evaluation plans is shown graphically in Figure 6-1. It should be noted that the total funding required for the Integrated, Reduced Cost Plan is $1,725,000, a reduction of 14 percent from $2,008,000. This cost savings is achievable through proper time-sequencing and grouping of like tasks or tasks which require a common data base.

The distribution of funding over the four year period of the evaluation project is significantly different among the three plans. In the Early Results, Non-Integrated Plan nearly all tasks are begun simultaneously at the start of the study. This plan emphasizes the desirability of obtaining definitive conclusions on Standard effectiveness as soon as possible. In fact, final results for the evaluation of FMVSS 215 and FMVSS 301 are available by the first half of the second year and all but two tasks in FMVSS 214 and FMVSS 208 are completed within the same time period. However, this plan has at least two very questionable characteristics. The non-sequential scheduling of almost all tasks will not allow much interactive use of results and analyses among tasks. Furthermore, the real-world budget and personnel constraints may not permit the allocation of over $1,400,000 to the first year of the project with a subsequent drastic reduction in funding levels.

The Integrated, Reduced Cost Plan emphasizes different priorities in scheduling tasks. The majority of tasks scheduled during the first year make use only of existing data. Tasks requiring new field data collections are generally begun in the second or third year of the project. The sequencing of tasks considers, where possible, the estimated probability of obtaining useable results. As Figure 6-1 shows, the funding requirements are about $600,000 during each of the first two years, and much less during the final two years of the project. However, it must be noted that this plan has one potential serious drawback. The final definitive results on the evaluation of each of the four Standards will not be available until the fourth year of the project. This characteristic may not be acceptable when, for example, NHTSA considers how the results will be used in relation to other projects currently underway or planned.

The final evaluation plan presented, Early Results and Equalized Funding Plan, is an attempt to retain the more desirable features of the first two plans, while at the same time eliminating their major differences. In this plan, the objective is to obtain relatively early results and to equalize the funding over the first three years of the project, with a drastic reduction in funding in the fourth year. To achieve these dual objectives, the work is time-sequenced according to Standard. All tasks under FMVSS 214 and FMVSS 215 are completed within the first two years. The FMVSS 301 effort will be conducted during the second and third years of the project and the work for FMVSS 208 will be undertaken during the third and fourth year. With this schedule, final results on two of the Standards are available within the first two years of the evaluation project. The funding required is slightly in excess of $600,000 in each of the first three years. While logical time-sequencing of tasks within each Standard will be retained, many of the cost saving features of the second plan may not be realized in the Early Results and Equalized Funding Plan, due to the staggering of the work schedule by Standards.

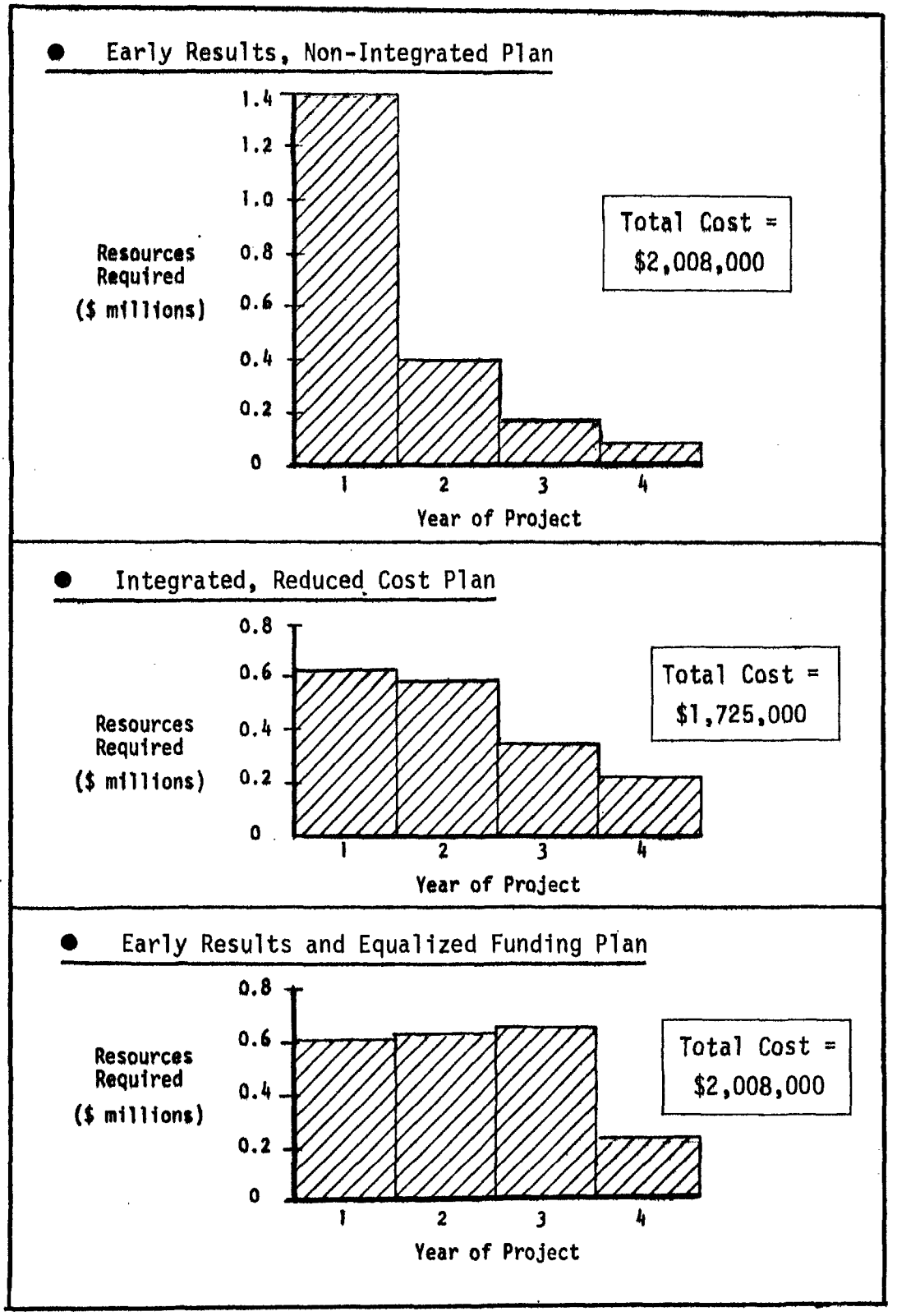

Figure 6-1. Annual funding required for three evaluation plans.

Table 6-2 presents the final completion date in months after project start for each Standard in each of the three evaluation plans. Considering the criterion of obtaining early definitive final results, the Early Results and Equalized Funding Plan is comparable to the Early Results, Non-Integrated Plan. FMVSS 215 and FMVSS 208 are completed at the same time in both plans. FMVSS 214 is completed twelve months earlier in the Early Results and Equalized Funding Plan, while FMVSS 301 is completed fifteen months later in this plan. This parity in timely conclusion of Standards' evaluation is achieved in the Early Results and Equalized Funding Plan without the highly skewed funding distribution that occurs in the Early Results, Non-Integrated Plan.

TABLE 6-2

COMPLETION DATES FOR STANDARDS

Federal Motor Vehicle Safety Standards	Completion After Project Go-Ahead		
	Early Results Non-Integrated (months)	Integrated, Reduced Cost (months)	Early Results and Equalized Funding (months)
FMVSS 214: Side Door Strength	36	45	24
FMVSS 215: Exterior Protection	16	40	16
FMVSS 301: Fuel System Integrity	18	42	33
FMVSS 208: Occupant Crash Protection	48	48	48

6.2 Early Results, Non-Integrated Plan

The schedule and costs of the Early Results, Non-Integrated Plan for each of the four Standards to be evaluated is given in Figure 6-2. A total of 14 tasks is included to evaluate the effectiveness of the four Standards and four tasks are required to determine the hardware costs of each Standard. As the title of this plan indicates, the tasks within and among the Standards are, for the most part, neither integrated nor time-sequenced. With the exception of the NCSS data analysis to determine side door strength (FMVSS 214) and the evaluation of passive system effectiveness (FMVSS 208), all tasks begin simultaneously at the beginning of the study. Thus, 70 percent of the total project cost of $2,008,000 is concentrated in the first year of the study ($1,404,000). This very intensive effort during the first year of the study does produce the final results for the evaluation of FMVSS 215 (Exterior Protection) and FMVSS 301 (Fuel System Integrity) within the first half of the second year, as well as the completion of all but two tasks in FMVSS 214 (Side Door Strength) and FMVSS 208 (Occupant Crash Protection) within the same time period. However, this essentially non-sequential scheduling of tasks does not permit much interactive use of results and analyses among tasks. Further, real-world budgeting constraints may not permit such a highly skewed application of funding to the project.Work in the last two years of the project (50 percent of the time) requires only about 10 percent of the total resources.

Federal Motor Vehicle Safety Standard	Task	Data Availability: Old Data	Data Availability: New Data	Task Duration (Months)	Cost ($000)
FMVSS 214: Side Door Strength	1. Mass Accident Data Analysis	X		8	55
	2. NCSS Data Analysis	X		9	108
	3. Field Accident (towaway) (NCSS type)		X	19	265
	4. Hardware Cost Analysis		X	7	51
					479
FMVSS 215: Exterior Protection	1. State Farm Insurance Data Analysis	X		6	26
	2. Mass Accident Data Analysis	X		6	28
	3. HLDI Data Analysis	X		6	26
	4. Car Owner Survey		X	12	148
	5. Towaway Survey		X	16	56
	6. Hardware Cost Analysis		X	7	51
					335
FMVSS 301: Fuel System Integrity	1. Fuel System Rupture (towaway)	(X)	X	18	240
	2. Fire/Fuel Spillage Analysis (Fire Dept.)	X		12	138
	3. Fire-Related Fatalities (State & FARS Fatal Accident Data)	X		12	164
	4. Hardware Cost Analysis		X	7	51
					593
FMVSS 208: Occupant Crash Protection	1. Seat Belt Effectiveness Analysis (RSEP/NCSS)	X		9	53
	2. Passive System Effectiveness Analysis (Existing & Future Data)	X	X	25	255
	3. Seat Belt Usage Survey		X	15	242
	4. Hardware Cost Analysis		X	7	51
					601
Total Cost ($000)					2008

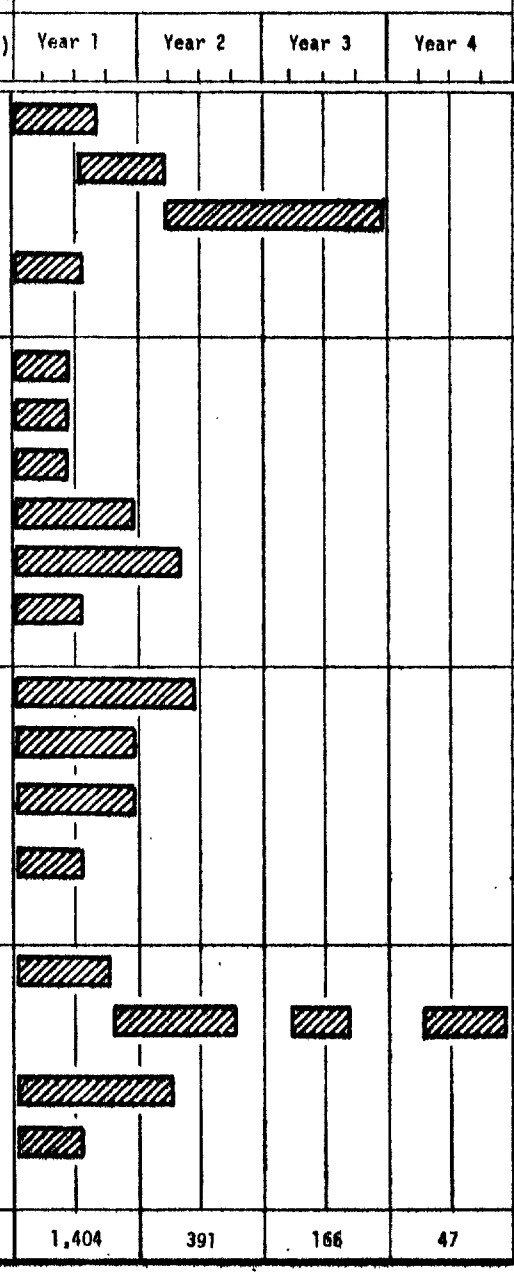

Figure 6-2. Schedule and costs of Early Results, Non-Integrated Plan.

6.3 Integrated, Reduced Cost Plan

The schedule and costs of the Integrated, Reduced Cost Plan for the four Standards are given in Figure 6-3. The premises for formulating the plan and the resultant schedule are quite different from the first plan presented. Although work is conducted simultaneously under all four Standards, the majority of tasks scheduled during the first year require only existing data. Those tasks which require new data collection or extensive data acquisition are generally scheduled to start in the second or third year of the project. One consideration taken into account (when possible) in the scheduling of tasks is the estimated probability of obtaining useful results. Other factors, however, may override this consideration. For example, the analysis of fuel system rupture, the most expensive task in the evaluation of FMVSS 301, and also the task judged most likely to produce useful results, is not scheduled to begin until the third year, as all towaway data collection tasks are scheduled in common during the third and fourth year of the project.

The cost reductions of $283,000 or 14 percent that are achieved in the Integrated, Reduced Cost Plan are due to simultaneous scheduling of tasks to be undertaken by a single agency or organization. These tasks which depend on a common data base, require a similar analysis methodology, or involve related new data collection efforts are: (1) analyses requiring mass accident data, State Farm data and HLDI data; (2) the hardware cost analysis for each Standard; (3) analyses utilizing NCSS and RSEP data; (4) data collection efforts involving towaway accidents, and (5) analyses of fire/fuel spillage and fire-related fatalities.*

The funding requirements for the Integrated, Reduced Cost Plan are close to $600,000 during each of the first two years and drop to about $350,000 and $175,000 respectively during the last two years of the project. Thus, this plan achieves both cost reductions and a steady level of funding during the first two years which is reduced during the third and fourth year of the project.

The Integrated, Reduced Cost Plan does contain at least one potentially serious drawback. The final definitive results of the evaluation of each of the four Standards will not be available until the fourth year of the project. It is true, of course, that substantial and perhaps rather conclusive intermediate results will be available well before the end of the fourth year. However, this mode of planning may not be acceptable to NHTSA if final definitive results are needed sooner because of the demands and requirements of other projects currently underway or planned.

---

*The analyses of fire/fuel spillage and fire-related fatalities are scheduled to be undertaken sequentially rather than simultaneously. However, cost reductions can be realized if these tasks are conducted by the same agency or organization.

Federal Motor Vehicle Safety Standard	Time After Project Go-Ahead (Years)				Cost ($000)
	Year 1	Year 2	Year 3	Year 4	
FMVSS 214: Side Door Strength	Mass Accident Data; Hardware Cost	NCSS Analysis	Field Accident Data (towaway) Analysis		380 (479)*
FMVSS 215: Exterior Protection	State Farm; Mass Accident; HLDI Analysis; Hardware Cost	Car Owner Survey	Towaway Survey		295 (335)
FMVSS 301: Fuel System Integrity	Fire-Related Fatalities; Hardware Cost	Fire/Fuel Spillage Anal.	Fuel System Rupture (towaway)		470 (593)
FMVSS 208: Occupant Crash Protection	Systems Usage Survey; Hardware Cost	Passive Systems Anal.; Seat Belt Effective.	Pass. Sys.	Passive Systems Anal.	580 (601)
Total Cost ($000)	612 (693)	590 (681)	347 (425)	176 (209)	1725 (2008)

*Dollar amount in parenthesis is the expected cost associated with the Non-Integrated, Early Results Plan. It is provided to permit easy comparison of the two plans.

Figure 6-3. Schedule and costs of Integrated, Reduced Cost Plan.

6.4 Early Results and Equalized Funding Plan

The schedule and costs of the Early Results and Equalized Funding Plan are given in Figure 6-4. The scheduling in this plan was formulated in an attempt to retain the more desirable features of the first two plans discussed while at the same time eliminating their major deficiencies. In this plan the basic objective is to obtain relatively early definitive final results for some Standards and to equalize the funding over the first three years of the project. This plan requires a funding level slightly in excess of $600,000 in each of the first three years. The resource requirements drop drastically in the fourth year to about $125,000.

The above results are achieved by (1) scheduling work in a time-sequenced framework according to Standard and (2) modifying (reducing) where this is feasible and helpful with regard to the length of time required to accomplish the evaluation work under a given Standard. Only tasks under FMVSS 215 and FMVSS 214 are initiated during the first years. All work under these Standards is completed within the second year. Thus, the definitive final results of two of the four Standards being evaluated are scheduled to be available within the first two years of the project. to achieve this result, the total time slapsed for evaluating FMVSS 214 has been reduced from three years to two years. This reduction appears to be entirely feasible by (1) beginning the NCSS data acquisition and analysis at the beginning of the study rather than waiting six months for the completion of the mass accident data analysis; (2) beginning the Field Accident (NCSS-type) data collection seven months after the start of the study; and (3) allowing 18 months (rather than 21 months) for data collection, preparation, analysis and reporting.

The FMVSS 301 effort will be conducted during the second and third year of the project. The work under FMVSS 208 will not begin until the third year and will be completed by the end of the fourth year. One could justify the delay in evaluating because (1) much more accident data on passive restraint systems will be available and (2) the study of active restraint system usage will reflect usage patterns that are representative of the very late 1970's with a greater preponderance of 3-point lap/shounder belts in the car population. The elapsed time for conducting the evaluation of FMVSS 208 is reduced from four years to two years in the EArly Results and Equalized Funding Plan. This can be accomplished by (1) beginning the analysis of passive system effectiveness at the start of the study (9 months time saved) and (2) eliminating one sequence of a more comprehensive re-analysis of the passive system accident data (two re-analyses are included in the original plan) and/or eliminating the two 6-month gaps of inactivity between re-analyses (12-18 months time saved).

Due to the time sequencing of work by Standard, most of the cost saving features of the Integrated, Reduced Cost Plan cannot be realized in this third plan. On the other hand, the Early Results and Equalized Funding Plan does have the desirable characteristic of providing definitive final results on two Standards within two years of the start of the project, and also maintains a steady level of funding during the first three years, when most of the work is accomplished.

Federal Motor Vehicle Safety Standard	Time After Project Go-Ahead (Years)				Cost ($000)
	Year 1	Year 2	Year 3	Year 4	
FMVSS 215: Exterior Protection					335
FMVSS 214: Side Door Strength					479
FMVSS 301: Fuel System Integrity					593
FMVSS 208: Occupant Crash Protection					601
Total Cost ($000)	608	619	657	124	2008

Figure 6-4. Schedule and costs of Early Results and Equalized Funding Plan.

7.0 END PRODUCTS OF THIS STUDY

During this study, *Evaluation Methodology for Four Federal Motor Vehicle Safety Standards* (Contract DOT-HS-6-01518), ten reports and two briefings were prepared between October 1976 and March 1977. In addition to those materials (listed below), many special appendices were assembled.

- CEM Report 4207-559. *Review of Four Federal Motor Vehicle Safety Standards: FMVSS 214, 215, 301, 208*, October 1976.
- CEM Report 4207-560. *Preliminary Design on an Evaluation Procedure for FMVSS 214: Side Door Strength*, November 1976.
- CEM Report 4207-561. *Preliminary Design of an Evaluation Procedure for FMVSS 215: Exterior Protection*, November 1976.
- CEM Report 4207-562. *Preliminary Design of an Evaluation Procedure for FMVSS 301: Fuel System Integrity*, December 1976.
- CEM Report 4207-563. *Preliminary Design of an Evaluation Procedure for FMVSS 208: Occupant Crash Protection*, December 1976.

These preliminary reports contained copies of the latest version of the Standard; an appendix describing the cost estimating methodologies of the Bureau of Labor Statistics, Government Accounting Office, and NHTSA; and specific appendices on temporary exemption from Standards, introduction dates of side door reinforcement beams, and a statistical discussion about selecting make and model for data sampling.

- CEM Report 4207-564. *Final Design and Implementation Plan for Evaluating the Effectiveness of FMVSS 214: Side Door Strength*, January 1977.
- CEM Report 4207-565. *Final Design and Implementation Plan for Evaluating the Effectiveness of FMVSS 215: Exterior Protection*, February 1977.
- CEM Report 4207-566. *Final Design and Implementation Plan for Evaluating the Effectiveness of FMVSS 301: Fuel System Integrity*, February 1977.
- CEM Report 4207-567. *Final Design and Implementation Plan for Evaluating the Effectiveness of FMVSS 208: Occupant Crash Protection*, March 1977.

These detailed reports contain general appendices which discuss several statistical methods, and the proposed Standard implementation cost categories. Also, many specific appendices are on the anticipated distribution of AIS levels in sampled accident data, rate of return for surveys, distribution of pre-and post-FMVSS 301 vehicles in fatal accidents by accident year, and discussion of contingency table analysis.

The Final Report and briefings are:

- CEM Report 4207-568. *Evaluation Methodologies for Four Federal Motor Vehicle Safety Standards: FMVSS 214 - Side Door Strength; FMVSS 215 - Exterior Protection; FMVSS 301 - Fuel System Integrity; FMVSS 208 - Occupant Crash Protection*, March 1977.

- CEM DWN 887. *Interim Report on Final Design and Implementation Plans for Evaluation of Federal Motor Vehicle Safety Standards: FMVSS 214 Side Door Strength, FMVSS 215 - Exterior Protection* (Briefing), 16 February 1977.

- CEM DWN 892. *Final Report on Final Design and Implementation Plans for Evaluation of Federal Motor Vehicle Safety Standards: FMVSS 301 - Fuel System Integrity; FMVSS 208 - Occupant Crash Protection* (Briefing), 31 March 1977.

APPENDIX A

FEDERAL MOTOR VEHICLE SAFETY STANDARD NO. 214

MOTOR VEHICLE SAFETY STANDARD NO. 214

Side Door Strength—Passenger Cars

(Docket No. 2–6; Notice No. 3)

S1. Purpose and scope. This standard specifies strength requirements for side doors of a motor vehicle to minimize the safety hazard caused by intrusion into the passenger compartment in a side impact accident.

S2. Application. This standard applies to passenger cars.

S3. Requirements. Each vehicle shall be able to meet the following requirements when any of its side doors that can be used for occupant egress are tested according to S4.

S3.1 Initial crush resistance. The initial crush resistance shall be not less than 2,250 pounds.

S3.2 Intermediate crush resistance. The intermediate crush resistance shall not be less than 3,500 pounds.

S3.3 Peak crush resistance. The peak crush resistance shall be not less than two times the curb weight of the vehicle or 7,000 pounds, whichever is less.

S4. Test procedures. The following procedures apply to determining compliance with section S3:

(a) Remove from the vehicle any seats that may affect load upon, or deflection of, the side of the vehicle. Place side windows in their uppermost position and all doors in locked position. Place the sill of the side of the vehicle opposite to the side being tested against a rigid unyielding vertical surface. Fix the vehicle rigidly in position by means of tiedown attachments located at or forward of the front wheel centerline and at or rearward of the rear wheel centerline.

(b) Prepare a loading device consisting of a rigid steel cylinder or semi-cylinder 12 inches in diameter with an edge radius of one-half inch. The length of the loading device shall be such that the top surface of the loading device is at least one-half inch above the bottom edge of the door window opening but not of a length that will cause contact with any structure above the bottom edge of the door window opening during the test.

(c) Locate the loading device as shown in Figure I (side view) of this section so that:

(1) Its longitudinal axis is vertical;

(2) Its longitudinal axis is laterally opposite the midpoint of a horizontal line drawn across the outer surface of the door 5 inches above the lowest point of the door;

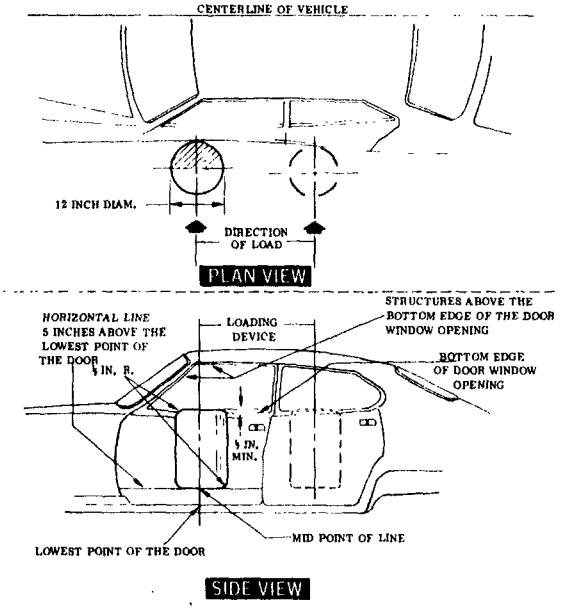

LOADING DEVICE LOCATION AND APPLICATION TO THE DOOR

FIGURE 1

(3) Its bottom surface is in the same horizontal plane as the horizontal line described in subdivision (2) of this subparagraph; and

(4) The cylindrical face of the device is in contact with the outer surface of the door.

(d) Using the loading device, apply a load to the outer surface of the door in an inboard direction normal to a vertical plane along the vehicle's longitudinal centerline. Apply the load continuously such that the loading device travel rate does not exceed one-half inch per second until the loading device travels 18 inches. Guide the loading device to prevent it from being rotated or displaced from its direction of travel. The test must be completed within 120 seconds.

(e) Record applied load versus displacement of the loading device, either continuously or in increments of not more than 1 inch or 200 pounds for the entire crush distance of 18 inches.

(f) Determine the initial crush resistance, intermediate crush resistance, and peak crush resistance as follows:

(1) From the results recorded in subparagraph (e) of this paragraph, plot a curve of load versus displacement and obtain the integral of the applied load with respect to the crush distances specified in subdivisions (2) and (3) of this paragraph. These quantities, expressed in inch-pounds and divided by the specified crush distances, represent the average forces in pounds required to deflect the door those distances.

(2) The initial crush resistance is the average force required to deform the door over the initial 6 inches of crush.

(3) The intermediate crush resistance is the average force required to deform the door over the initial 12 inches of crush.

(4) The peak crush resistance is the largest force recorded over the entire 18-inch crush distance.

October 30, 1970
35 F.R. 16801

APPENDIX B

FEDERAL MOTOR VEHICLE SAFETY STANDARD NO. 215

APPENDIX A: MOTOR VEHICLE SAFETY STANDARD NO. 215

MOTOR VEHICLE SAFETY STANDARD NO. 215

Exterior Protection—Passenger Cars

(Docket Nos. 1–9 and 1–10; Notice No. 4)

S1. Scope. This standard establishes requirements for the impact resistance and the configuration of front and rear vehicle surfaces.

S2. Purpose. The purpose of this standard is to prevent low-speed collisions from impairing the safe operation of vehicle systems, and to reduce the frequency of override or underride in higher speed collisions.

S3. Application. This standard applies to passenger cars.

S4. Definition. All terms defined in the Act and the rules and standards issued under its authority are used as defined therein.

S5. Requirements.

S5.1 Vehicles manufactured on or after September 1, 1972.

Each vehicle manufactured on or after September 1, 1972, shall meet the protective criteria of S5.3.1 through S5.3.4 when it impacts a fixed collision barrier that is perpendicular to the line of travel of the vehicle, while traveling longitudinally forward at 5 mph and while traveling longitudinally rearward at 2½ mph, under the conditions of S6.1.

S5.2 Vehicles manufactured on or after September 1, 1973.

[Except as provided in S5.2.1 and S5.2.2, each vehicle manufactured on or after September 1, 1973, shall meet the protective criteria of S5.3.1 through S5.3.7 during and after impacts by a pendulum-type test device in accordance with the procedures of S7.1 and S7.2 followed by impacts into a fixed collision barrier that is perpendicular to the line of travel of the vehicle, while traveling longitudinally forward at 5 mph and while traveling longitudinally rearward at 5 mph under the conditions of S6. (39 F.R. 29369—August 15, 1974. Effective: 3/1/75)]

S5.2.1 [The corner-impact procedure of S7.2.2 shall not apply to any vehicle with a wheelbase exceeding 120 inches manufactured from September 1, 1973 to August 31, 1976. (40 F.R. 20823—May 13, 1975. Effective: 5/13/75)]

S5.2.2 [The fixed collision barrier impact requirements of S5.2 shall apply, but the pendulum impact requirements of S5.2 shall not apply to each vehicle manufactured from September 1, 1973 to October 31, 1974, that has a wheelbase of 115 inches or less and that either—

(a) Has a convertible top;

(b) Has no roof support structure between the A-pillar and the rear roof support structure; or

(c) Has no designated seating position behind the front designated seating positions.

(39 F.R. 31641—August 30, 1974. Effective: 9/1/74)]

S5.3 Protective criteria.

S5.3.1 [Each lamp or reflective device, except license plate lamps, shall be free of cracks and shall comply with the applicable visibility requirements of S4.3.1.1 of Standard No. 108 (§ 571.108 of this part). The aim of each headlamp shall be adjustable to within the beam aim inspection limits specified in Table 2 of SAE Recommended Practice J599b, July 1970, measured with a mechanical aimer conforming to the requirements of SAE Standard J602a, July 1970. (37 F.R. 16803—August 19, 1972. Effective: 9/1/72)]

S5.3.2 The vehicle's hood, trunk, and doors shall operate in the normal manner.

S5.3.3 The vehicle's fuel and cooling systems shall have no leaks or constricted fluid passages and all sealing devices and caps shall operate in the normal manner.

S5.3.4 The vehicle's exhaust system shall have no leaks or constrictions.

S5.3.5 [The vehicle's propulsion, suspension, steering, and braking systems shall remain in adjustment and shall operate in the normal manner. (36 F.R. 23802—December 15, 1971. Effective: September 1, 1972)]*

S5.3.6 The vehicle shall not touch the test device except on the impact ridge shown in Figures 1 and 2. (36 F.R. 20369—October 21, 1971. Effective: 9/1/72, except as noted in S5.2)]

[**S5.3.7** A pressure vessel used to absorb impact energy in an exterior protection system by the accumulation of gas pressure or hydraulic pressure shall not suffer loss of gas or fluid accompanied by separation of fragments from the vessel. (39 F.R. 29369—August 15, 1974. Effective: 3/1/75)]

S6. Conditions. The vehicle shall meet the requirements of S5 under the following conditions.

S6.1 General.

S6.1.1 The vehicle is at unloaded vehicle weight.

S6.1.2 The front wheels are parallel to the vehicle's longitudinal centerline.

S6.1.3 Tires are inflated to the vehicle manufacturer's recommended pressure for the specified loading condition.

S6.1.4 Brakes are disengaged and the transmission is in neutral.

[**S6.1.5** Trailer hitches are removed from the vehicle. (37 F.R. 16803—August 19, 1972. Effective: 9/1/72)]

S6.2 Pendulum test conditions. The following conditions apply to the pendulum test procedures of S7.1 and S7.2.

S6.2.1 The test device consists of a block with one side contoured as specified in Figure 1 and Figure 2 with the impact ridge made of hardened steel.

S6.2.2 With plane A vertical, the impact line shown in Figures 1 and 2 is horizontal at the same height as the test device's center of percussion.

*S5.2 through S5.3.6 were amended October 21, 1971. S5.3.1 and S5.3.5 were subsequently amended 36 F.R. 23802—December 15, 1971

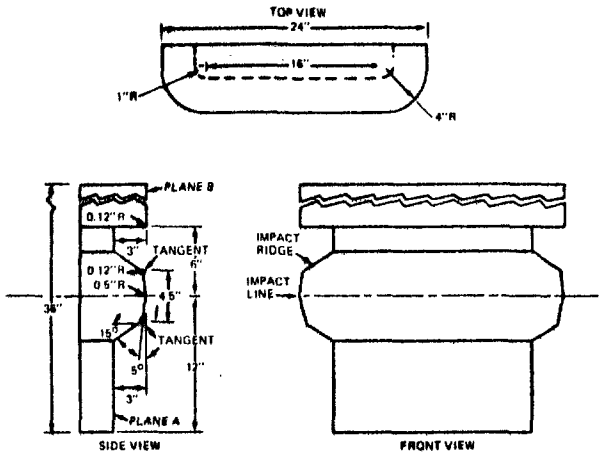

FIGURE 1

S6.2.3 The effective impacting mass of the test device is equal to the mass of the tested vehicle.

S6.2.4 When impacted by the test device, the vehicle is at rest on a level, rigid concrete surface.

[**S6.3 Barrier test condition.** At the onset of a barrier impact, the vehicle's engine is operating at idling speed. (36 F.R. 20369—October 21, 1971. Effective: 9/1/72)]

S7. Test procedures.

S7.1 Longitudinal impact test procedures. [Impact the vehicle's front surface and its rear surface two times each with the impact line at any height between 20 inches and 16 inches, in accordance with the following procedure. (40 F.R. 20823—May 13, 1975. Effective date: 5/13/75)]

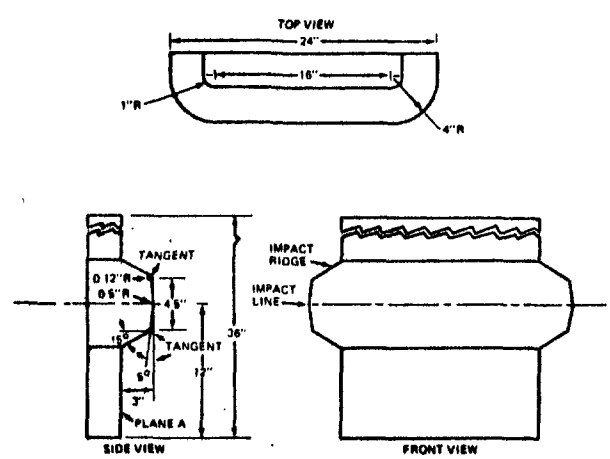

FIGURE 2

S7.1.1 For impacts at a height of 20 inches, place the test device shown in Figure 1 so that plane A is vertical and the impact line is horizontal at the specified height.

S7.1.2 For impacts at a height between 20 inches and 16 inches, place the test device shown in figure 2 so that plane A is vertical and the impact line is horizontal at a height within the range.

S7.1.3 For each impact, position the test device so that the impact line is at least 2 inches apart in vertical direction from its position in any prior impact, unless the midpoint of the impact line with respect to the vehicle is to be more than 12 inches apart laterally from its position in any prior impact.

S7.1.4 For each impact, align the vehicle so that it touches, but does not move, the test device, with the vehicle's longitudinal centerline perpendicular to the plane that includes plane A of the test device and with the test device inboard of the vehicle corner test positions specified in S7.2.

[**S7.1.5** Move the test device away from the vehicle, then release it so that plane A remains vertical from release until the onset of rebound, and the arc described by any point on the impact line is constant, with a radius of not less than 11 feet, and lies in a plane parallel to the vertical plane through the vehicle's longitudinal centerline. (36 F.R. 8734—May 12, 1971)]

S7.1.6 [Impact the vehicle at 5 mph. (36 F.R. 20369—October 21, 1971. Effective: 9/1/72)]

S7.1.7 Perform the impacts at intervals of not less than 30 minutes.

S7.2 Corner impact test procedure. Impact a front corner and a rear corner of the vehicle once each with the impact line at a height of 20 inches and impact the other front corner and the other rear corner once each with the impact line at any height between 20 inches and 16 inches in accordance with the following procedure.

S7.2.1 For an impact at a height of 20 inches, place the test device shown in figure 1 so that plane A is vertical and the impact line is horizontal at the specified height.

S7.2.2 For an impact at a height between 20 inches and 16 inches, place the test device shown in figure 2 so that plane A is vertical and the impact line is horizontal at a height within the range.

S7.2.3 Align the vehicle so that a vehicle corner touches, but does not move, the lateral center of the test device with plane A of the test device forming an angle of 60 degrees with a vertical longitudinal plane.

S7.2.4 Move the test device away from the vehicle, then release it so that plane A remains vertical from release until the onset of rebound, and the arc described by any point on the impact line is constant, with a radius of not less than 11 feet, and lies in a vertical plane at an angle of 30° to the vertical plane through the vehicle's longitudinal centerline.

S7.2.5 Impact each corner at 3 mph.

36 F.R. 7218
April 16, 1971

36 F.R. 8734
May 12, 1971

APPENDIX C

FEDERAL MOTOR VEHICLE SAFETY STANDARD NO. 301

[Docket No. 73-20; Notice 8]

PART 571—MOTOR VEHICLE SAFETY STANDARDS

Fuel System Integrity

The purpose of this notice is to amend Motor Vehicle Safety Standard No. 301, *Fuel System Integrity* (49 CFR 571.301) to extend the applicability of the stand-

ard to school buses with a GVWR in excess of 10,000 pounds. The amendment specifies conditions for a moving contoured barrier crash for school buses in order to determine the amount of fuel spillage following impact.

On October 27, 1974, the Motor Vehicle and Schoolbus Safety Amendments of 1974, amending the National Traffic and Motor Vehicle Safety Act, were signed into law (Pub. L. 93-492, 88 Stat. 1470). Section 103(i)(1)(A) of the Act, as amended, orders the promulgation of a safety standard establishing minimum requirements for the fuel system integrity of school buses. Standard No. 301 currently contains requirements for school buses with a GVWR of 10,000 pounds or less which will become effective beginning September 1, 1976. Larger school buses, which comprise approximately 90 percent of the school bus population, will be included in Standard No. 301 by this amendment.

A proposal to amend Standard No. 301 with respect to school buses, loading conditions, and spillage measurement time was published on April 16, 1975 (40 FR 17036). An amendment to the Standard specifying certain loading conditions and establishing a 30-minute fuel spillage measurement period was published on August 6, 1975 (40 FR 33036). At the request of several members of Congress, the period for comments on the school bus proposals was extended. This notice responds to the comments received with respect to the inclusion of school buses within the requirements of the standard.

Seven manufacturers opposed the requirement of a single impact test by a moving contoured barrier at any point on the school bus body, arguing that such a requirement would necessitate a proliferation of expensive tests in order to ensure compliance at every conceivable point of impact. The NHTSA does not agree. Although not specifying a particular impact point, the test condition allows for testing at the few most vulnerable points of each kind of school bus fuel system configuration. Therefore, only impacts at those points are necessary to determine compliance. On the basis of its knowledge of the bus design, a manufacturer should be able to make at least an approximate determination of the most vulnerable points on the bus body.

Two school bus body manufacturers requested a requirement that the manufacturer who installs the fuel system be responsible for compliance testing, while one chassis manufacturer argued that responsibility for compliance should rest with the final manufacturer. In most cases, if the basic fuel system components are included in the chassis as delivered by its manufacturer, the multistage vehicle regulations of 49 CFR Part 568 require the chassis manufacturer at least to describe the conditions under which the completed vehicle will conform, since it could not truthfully state that the design of the chassis has no substantial determining effect on conformity. Beyond that, however, the NHTSA position is that the decision as to who should perform the tests and who should take the responsibility is best not regulated by the government. The effect of Part 568 is to allow the final-stage manufacturer to avoid primary responsibility for conformity to a standard if it completes the vehicle in accordance with the conditions or instructions furnished with the incomplete vehicle by its manufacturer. Whether it does so is a decision it must make in light of all the circumstances.

This notice extends the proposed exclusion for vehicles that use fuel with a boiling point below 32° F. to school buses having a GVWR greater than 10,000 pounds. Fuel systems using gaseous fuels are not subject to the spillage problems against which this standard is directed.

The Vehicle Equipment Safety Commission requested that school buses be required to undergo static rollover tests and that the engine be running during the tests. Upon consideration, the NHTSA finds that a static rollover test for schoolbuses is impractical in light of the expensive test facility that would be required. A requirement that the engine be running during the impact test would make little difference in the resulting fuel spillage. Since the standard requires that the fuel tank be filled with Stoddard solvent during the impact test, the test vehicle would have to be equipped with an auxiliary fuel system for the engine. The expense of modifying the test vehicle to allow the engine to run during the test would not justify the minimal benefits resulting from a requirement that the engine be running. However, the fuel system integrity of school buses will be continually monitored and analyzed by the NHTSA. Therefore, suggestions such as these may be the subject of future rulemaking.

One school bus body manufacturer cited the infrequency of school bus fires resulting from collisions as a reason for ameliorating or eliminating altogether fuel system integrity requirements for school buses. In promulgating these amendments to Standard No. 301, the NHTSA is acting under the statutory mandate to develop regulations concerning school bus fuel systems. This statute reflects the need, evidently strongly felt by the public, to protect the children who ride in the school buses. They and their parents have little direct control over the types of vehicles in which they ride to school, and are therefore not in a position to determine the safety of the vehicles. Considering the high regard expressed by the public for the safety of its children, the NHTSA finds it important that the schoolbus standards be effective and meaningful.

The California Highway Patrol expressed the concern that these amendments would preempt State regulations to the extent that the State would be precluded from specifying the location of fuel tanks, fillers, vents, and drain openings in school buses. The standard will unavoidably have that effect, by the operation of section 103(d) of the National Traffic and Motor Vehicle Safety Act. However, although a State may not have regulations of general applicability that bear on these apsects of performance, the second sentence of the same section makes it clear that a State or political subdivision may specify higher standards of performance for vehicles purchased for its own use, although of course the Federal standards must be met in any case.

In addition to provisions directly relating to schoolbuses, this notice clarifies the loading condition amendments in the notice of August 6, 1975, by amending S5.1 to provide for testing with 50th percentile dummies. The wording of S6.1 is identical to that of the proposal.

In light of the foregoing, 49 CFR 571.301, Motor Vehicle Safety Standards No. 301, is revised to read as set forth below.

Effective date: July 15, 1976, in conformity with the schedule mandated by the 1974 Amendments to the Traffic Safety Act. However, the effective date of the amendment of S6.1 is October 15, 1975. Because the amendment to that paragraph clarifies the revision of certain requirements which became effective September 1, 1975, it is found for good cause shown that an effective date for the amendment of S6.1 less than 180 days after issuance is in the public interest.

(Sec 103, 119, Pub. L. 89-563, 80 Stat. 718 (15 U.S.C. 1392, 1407); sec. 202, Pub. L. 93-492, 88 Stat. 1470 (15 U.S.C. 1392); delegations of authority at 49 CFR 1.51 and 501.8).

Issued on October 8, 1975.

GENE G. MANNELLA,
Acting Administrator.

Section 571.301 is revised as follows:

§ 571.301 Standard No. 301; fuel system integrity.

S1. *Scope.* This standard specifies requirements for the integrity of motor vehicle fuel systems.

S2. *Purpose.* The purpose of this standard is to reduce deaths and injuries occurring from fires that result from fuel spillage during and after motor vehicle crashes.

S3. *Application.* This standard applies to passenger cars, and to multipurpose passenger vehicles, trucks, and buses that have a GVWR of 10,000 pounds or less and use fuel with a boiling point above 32° F, and to schoolbuses that have a GVWR greater than 10,000 pounds and use fuel with a boiling point about 32° F.

S4. *Definition.* "Fuel spillage" means the fall, flow, or run of fuel from the vehicle but does not include wetness resulting from capillary action.

S5. *General requirements.*

S5.1 *Passenger cars.* Each passenger car manufactured from September 1, 1975, to August 31, 1976, shall meet the requirements of S6.1 in a perpendicular impact only, and S6.4. Each passenger car manufactured on or after September 1, 1976, shall meet all the requirements of S6, except S6.5.

S5.2 *Vehicles with GVWR of 6,000 pounds or less.* Each multipurpose passenger vehicle, truck, and bus with a GVWR of 6,000 pounds or less manufactured from September 1, 1976, to Au-

gust 31, 1977, shall meet all the requirements of S6.1 in a perpendicular impact only, S6.2, and S6.4. Each of these types of vehicles manufactured on or after September 1, 1977, shall meet all the requirements of S6, except S6.5.

S5.3 *Vehicles with GVWR of more than 6,000 pounds but not more than 10,000 pounds.* Each multipurpose passenger vehicle, truck, and bus with a GVWR of more than 6,000 pounds but not more than 10,000 pounds manufactured from September 1, 1976, to August 31, 1977, shall meet the requirements of S6.1 in a perpendicular impact only. Each vehicle manufactured on or after September 1, 1977, shall meet all the requirements of S6, except S6.5.

S5.4 *Schoolbuses with a GVWR greater than 10,000 pounds.* Each schoolbus with a GVWR greater than 10,000 pounds manufactured on or after July 15, 1976, shall meet the requirements of S6.5.

S5.5 *Fuel spillage: Barrier crash.* Fuel spillage in any fixed or moving barrier crash test shall not exceed 1 ounce by weight from impact until motion of the vehicle has ceased, and shall not exceed a total of 5 ounces by weight in the 5-minute period following cessation of motion. For the subsequent 25-minute period fuel spillage during any 1-minute interval shall not exceed 1 ounce by weight.

S5.6 *Fuel spillage: Rollover.* Fuel spillage in any rollover test from the onset of rotational motion, shall not exceed a total of 5 ounces by weight for the first 5 minutes of testing at each successive 90° increment. For the remaining testing period at each increment of 90° fuel spillage during any 1-minute interval shall not exceed 1 ounce by weight.

S6. *Test requirements.* Each vehicle with a GVWR of 10,000 pounds or less shall be capable of meeting the requirements of any applicable barrier crash test followed by a static rollover, without alteration of the vehicle during the test sequence. A particular vehicle need not meet further requirements after having been subjected to a single barrier crash test and a static rollover test.

S6.1 *Frontal barrier crash.* When the vehicle traveling longitudinally forward at any speed up to and including 30 mph impacts a fixed collision barrier that is perpendicular to the line of travel of the vehicle, or at any angle up to 30° in either direction from the perpendicular to the line of travel of the vehicle, with 50th-percentile test dummies as specified in Part 572 of this chapter at each front outboard designated seating position and at any other position whose protection system is required to be tested by a dummy under the provisions of Standard No. 208, under the applicable conditions of S7, fuel spillage shall not exceed the limits of S5.5.

S6.2 *Rear moving barrier crash.* When the vehicle is impacted from the rear by a barrier moving at 30 mph, with test dummies as specified in Part 572 of this chapter at each front outboard designated seating position, under the applicable conditions of S7, fuel spillage shall not exceed the limits of S5.5.

S6.3 *Lateral moving barrier crash.* When the vehicle is impacted laterally on either side by a barrier moving at 20 mph with 50th-percentile test dummies as specified in Part 572 of this chapter at positions required for testing to Standard No. 208, under the applicable conditions of S7, fuel spillage shall not exceed the limits of S5.5.

S6.4 *Static rollover.* When the vehicle is rotated on its longitudinal axis to each successive increment of 90°, following an impact crash S6.1, S6.2, or S6.3, fuel spillage shall not exceed the limits of S5.6.

S6.5 *Moving contoured barrier crash.* When the moving contoured barrier assembly traveling longitudinally forward at any speed up to and including 30 mph impacts the test vehicle (schoolbus with a GVWR exceeding 10,000 pounds) at any point and angle, under the applicable conditions of S7.1 and S7.5, fuel spillage shall not exceed the limits of S5.5.

S7. *Test conditions.* The requirements of S5 and S6 shall be met under the following conditions. Where a range of conditions is specified, the vehicle must be capable of meeting the requirements at all points within the range.

S7.1 *General test conditions.* The following conditions apply to all tests.

S7.1.1 The fuel tank is filled to any level from 90 to 95 percent of capacity with Stoddard solvent, having the physical and chemical properties of type 1 solvent, Table I, ASTM Standard D484-71, "Standard Specifications for Hydrocarbon Dry Cleaning Solvents."

S7.1.2 The fuel system other than the fuel tank is filled with Stoddard solvent to its normal operating level.

S7.1.3 In meeting the requirements of S6.1 through S6.3, if the vehicle has an electrically driven fuel pump that normally runs when the vehicle's electrical system is activated, it is operating at the time of the barrier crash.

S7.1.4 The parking brake is disengaged and the transmission is in neutral, except that in meeting the requirements of S6.5 the parking brake is set.

S7.1.5 Tires are inflated to manufacturer's specifications.

S7.1.6 The vehicle, including test devices and instrumentation, is loaded as follows:

(a) Except as specified in S7.1.1, a passenger car is loaded to its unloaded vehicle weight plus its rated cargo and luggage capacity weight, secured in the luggage area, plus the necessary test dummies as specified in S6, restrained only by means that are installed in the vehicle for protection at its seating position.

(b) Except as specified in S7.1.1, a multipurpose passenger vehicle, truck, or bus with a GVWR of 10,000 pounds or less is loaded to its unloaded vehicle weight, plus the necessary test dummies, as specified in S6., plus 300 pounds or its rated cargo and luggage capacity weight, whichever is less, secured to the vehicle and distributed so that the weight on each axle as measured at the tire-ground interface is in proportion to its GAWR. If the weight on any axle, when the vehicle is loaded to unloaded vehicle weight plus dummy weight, exceeds the axle's proportional share of the test weight, the remaining weight shall be placed so that the weight on that axle remains the same. Each dummy shall be restrained only by means that are installed in the vehicle for protection at its seating position.

(c) Except as specified in S7.1.1, a schoolbus with a GVWR greater than 10,000 pounds is loaded to its unloaded vehicle weight, plus 120 pounds of unsecured weight at each designated seating position.

S7.2 *Lateral moving barrier crash test conditions.* The lateral moving barrier crash test conditions are those specified in S8.2 of Standard No. 208, 49 CFR 571.208.

S7.3 *Rear moving barrier test conditions.* The rear moving barrier test conditions are those specified in S8.2 of Standard No. 208, 49 CFR 571.208, except for the positioning of the barrier and the vehicle. The barrier and test vehicle are positioned so that at impact—

(a) The vehicle is at rest in its normal attitude;

(b) The barrier is traveling at 30 mph with its face perpendicular to the longitudinal centerline of the vehicle; and

(c) A vertical plane through the geometric center of the barrier impact surface and perpendicular to that surface coincides with the longitudinal centerline of the vehicle.

S7.4 *Static rollover test conditions.* The vehicle is rotated about its longitudinal axis, with the axis kept horizontal, to each successive increment of 90°, 180°, and 270° at a uniform rate, with 90° of rotation taking place in any time interval from 1 to 3 minutes. After reaching each 90° increment the vehicle is held in that position for 5 minutes.

S7.5 *Moving contoured barrier test conditions.* The following conditions apply to the moving contoured barrier crash test.

S7.5.1 The moving barrier, which is mounted on a carriage as specified in figure 1, is of rigid construction, symmetrical about a vertical longitudinal plane. The contoured impact surface, which is 24.75 inches high and 78 inches wide, conforms to the dimensions shown in figure 2, and is attached to the carriage as shown in that figure. The ground clearance to the lower edge of the impact surface is 5.25 ± 0.5 inches. The wheelbase is 120 ± 2 inches.

S7.5.2 The moving contoured barrier, including the impact surface, supporting structure, and carriage, weighs 4,000 ± 50 pounds with the weight distributed so that 900 ± 25 pounds is at each rear wheel and 1100 ± 25 pounds is at each front wheel. The center of gravity is located 54.0 ± 1.5 inches rearward of the front wheel axis, in the vertical longitudinal plane of symmetry, 15.8 inches above the ground. The moment of inertia about the center of gravity is:

$I_x = 27 \pm 13.6$ slug ft²

$I_z = 3475 \pm 174$ slug ft²

S7.5.3 The moving contoured barrier has a solid nonsteerable front axle and fixed rear axle attached directly to the frame rails with no spring or other type of suspension system on any wheel. (The moving barrier assembly is equipped with a braking device capable of stopping its motion.)

S7.5.4 The moving barrier assembly is equipped with G78–15 pneumatic tires with a tread width of 6.0 ± 1 inch, inflated to 24 psi.

S7.5.5 The concrete surface upon which the vehicle is tested is level, rigid, and of uniform construction, with a skid number of 75 when measured in accordance with American Society of Testing and Materials Method E–274–65T at 40 mph, omitting water delivery as specified in paragraph 7.1 of that method.

S7.5.6 The barrier assembly is released from the guidance mechanism immediately prior to impact with the vehicle.

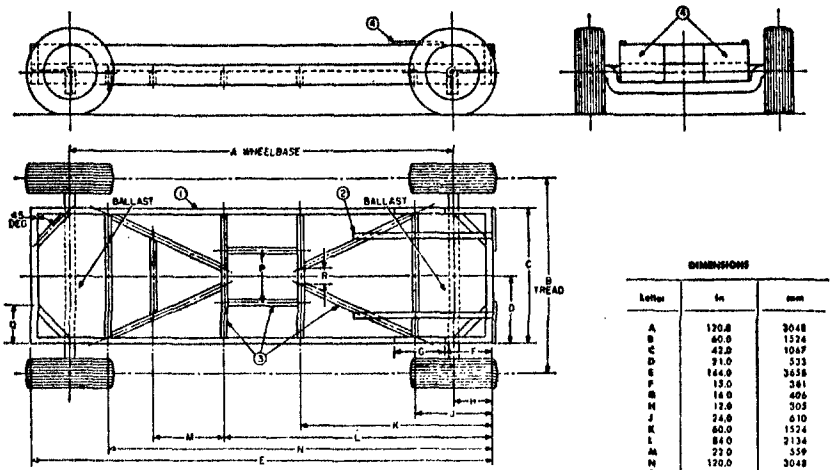

DIMENSIONS

Letter	in	mm
A	120.0	3048
B	60.0	1524
C	42.0	1067
D	21.0	533
E	144.0	3658
F	15.0	381
G	16.0	406
H	12.0	305
J	24.0	610
K	60.0	1524
L	84.0	2134
M	22.0	559
N	120.0	3048
P	16.0	406
Q	12.0	305
R	6.0	152

NOTES:
1. OUTER FRAME 6.0 × 2.0 × 0.19 IN (152 × 51 × 5 mm) STEEL TUBING, TWO PIECES WELDED TOGETHER FOR A 12.0 IN (305 mm) HEIGHT.
2. BALLAST TIE DOWNS
3. ALL INNER REINFORCEMENTS AND FRAME GUSSETS OF 4.0 × 2.0 × 0.19 IN (102 × 51 × 5 mm) STEEL TUBING.
4. REINFORCED AREAS FOR BOLTING ON FACE PLATES.

FIG. 1—COMMON CARRIAGE FOR MOVING BARRIERS

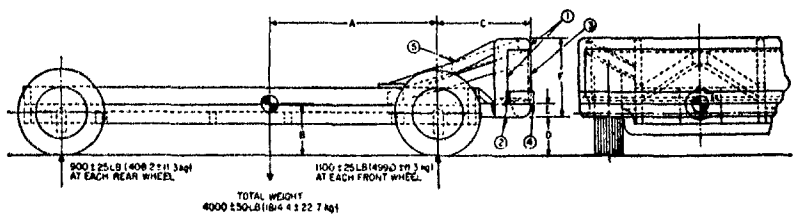

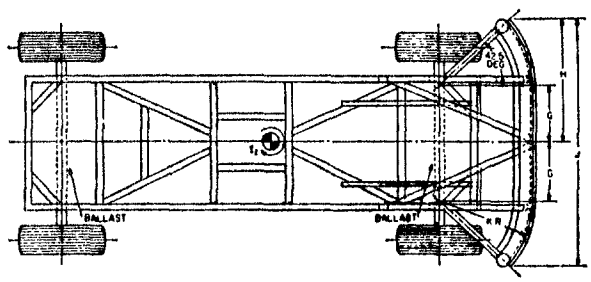

MOMENTS OF INERTIA
I_x = 271 ± 13.6 SLUG · FT² (367 ± 18.4 kg · m²)
I_y = 3475 ± 174 SLUG · FT² (4711 ± 236 kg · m²)

DIMENSIONS

Letter	in	mm
A	54.0	1372
B	15.8	401
C	30.0	762
D	12.25	311
E	3.75	95
F	24.75	629
G	16.0	407
H	39.0	991
J	78.0	1981
K	30.0	762

NOTES:
1. UPPER FRAME 4.0 IN DIA × 0.25 IN WALL (102 mm DIA × 6 mm WALL) STEEL TUBING (THREE SIDES).
2. LOWER FRAME 6.0 IN DIA × 0.50 IN WALL (152 mm DIA × 13 mm WALL) STEEL TUBING.
3. FACE PLATE 0.75 IN (19 mm) THICK COLD ROLLED STEEL.
4. LEADING EDGE 1.0 × 4.0 IN (25 × 102 mm) STEEL BAND, SHARP EDGES BROKEN.
5. ALL INNER REINFORCEMENTS 4.0 × 2.0 × 0.19 IN (102 × 51 × 5 mm) STEEL TUBING.

FIG. 2—COMMON CARRIAGE WITH CONTOURED IMPACT SURFACE ATTACHED

[FR Doc.75-27612 Filed 10-14-75;8:45 am]

APPENDIX D

FEDERAL MOTOR VEHICLE SAFETY STANDARD NO. 208

MOTOR VEHICLE SAFETY STANDARD NO. 208

Occupant Crash Protection in Passenger Cars, Multipurpose Passenger Vehicles, Trucks and Buses

(Docket No. 69-7; Notice No. 9)

S1. Scope. This standard specifies performance requirements for the protection of vehicle occupants in crashes.

S2. Purpose. The purpose of this standard is to reduce the number of deaths of vehicle occupants, and the severity of injuries, by specifying vehicle crashworthiness requirements in terms of forces and accelerations measured on anthropomorphic dummies in test crashes, and by specifying equipment requirements for active and passive restraint systems.

S3. Application. [This standard applies to passenger cars, multipurpose passenger vehicles, trucks, and buses. In addition, S9, *Pressure vessels and explosive devices*, applies to vessels designed to contain a pressurized fluid or gas, and to explosive devices, for use in the above types of motor vehicles as part of a system designed to provide protection to occupants in the event of a crash. (37 F.R. 9222—May 6, 1972. Effective: 6/2/72)]

S4. General requirements.

S4.1 Passenger cars.

[**S4.1.1 Passenger cars manufactured from January 1, 1972, to August 31, 1973.** Each passenger car manufactured from January 1, 1972, to August 31, 1973, inclusive, shall meet the requirements of S4.1.1.1, S4.1.1.2, or S4.1.1.3. A protection system that meets the requirements of S4.1.1.1 or S4.1.1.2 may be installed at one or more designated seating positions of a vehicle that otherwise meets the requirements of S4.1.1.3. (38 F.R. 21930—August 14, 1973. Effective: 8/31/73)]

S4.1.1.1 First option—complete passive protection system. The vehicle shall meet the crash protection requirements of S5 by means that require no action by vehicle occupants.

S4.1.1.2 Second option—lap belt protection system with belt warning. The vehicle shall—

(a) [At each designated seating position have a Type 1 seat belt assembly or a Type 2 seat belt assembly with a detachable upper torso portion that conforms to S7.1 and S7.2 of this standard. (37 F.R. 3911—February 24, 1972. Effective: 2/24/72)]

(b) At each front outboard designated seating position have a seat belt warning system that conforms to S7.3; and

(c) Meet the frontal crash protection requirements of S5.1, in a perpendicular impact, with respect to anthropomorphic test devices in each front outboard designated seating position restrained only by Type 1 seat belt assemblies.

S4.1.1.3 Third option—lap and shoulder belt protection system with belt warning.

S4.1.1.3.1 Except for convertibles and open-body vehicles, the vehicle shall—

(a) At each front outboard designated seating position have a Type 2 seatbelt assembly that conforms to Standard No. 209 and S7.1 and S7.2 of this standard, with either an integral or detachable upper torso portion, and a seatbelt warning system that conforms to S7.3;

(b) At each designated seating position other than the front outboard positions, have a Type 1 or Type 2 seat belt assembly that conforms to Standard No. 209 and to S7.1 and S7.2 of this standard; and

(c) When it perpendicularly impacts a fixed collision barrier, while moving longitudinally

forward at any speed up to and including 30 m.p.h., under the test conditions of S8.1 with anthropomorphic test devices at each front outboard position restrained by Type 2 seatbelt assemblies, experience no complete separation of any load-bearing element of a seatbelt assembly or anchorage.

S4.1.1.3.2 Convertibles and open-body type vehicles shall at each designated seating position have a Type 1 or Type 2 seatbelt assembly that conforms to Standard No. 209 and to S7.1 and S7.2 of this standard, and at each front outboard designated seating position have a seatbelt warning system that conforms to S7.3.

S4.1.2 [Passenger cars manufactured from September 1, 1973, to August 31, 1976. Passenger cars manufactured from September 1, 1973, to August 31, 1976, inclusive, shall meet the requirements of S4.1.2.1, S4.1.2.2, or S4.1.2.3. A protection system that meets the requirements of S4.1.2.1 or S4.1.2.2 may be installed at one or more designated seating positions of a vehicle that otherwise meets the requirements of S4.1.2.3. (40 F.R. 33977—August 13, 1975. Effective: 8/13/75] *

S4.1.2.1 First option—complete passive protection system. The vehicle shall meet the crash protection requirements of S5 by means that require no action by vehicle occupants.

S4.1.2.2 Second option—head-on passive protection system. The vehicle shall—

[(a) At each designated seating position have a Type 1 seat belt assembly or a Type 2 seat belt assembly with a detachable upper torso portion that conforms to S7.1 and S7.2 of this standard. (37 F.R. 3911—February 24, 1972. Effective: 2/24/72)]

(b) At each front designated seating position, meet the frontal crash protection requirements of S5.1, in a perpendicular impact, by means that require no action by vehicle occupants;

(c) At each front designated seating position, meet the frontal crash protection requirements of S5.1, in a perpendicular impact, with a test device restrained by a Type 1 seatbelt assembly; and

(d) At each front outboard designated seating position, have a seatbelt warning system that conforms to S7.3.

S4.1.2.3 Third option—lap and shoulder belt protection system with belt warning.

S4.1.2.3.1 [Except for convertibles and open-body vehicles, the vehicle shall—

(a) At each front outboard designated seating position have a seat belt assembly that conforms to S7.1 and S7.2 of this standard, and a seat belt warning system that conforms to S7.3. The belt assembly shall be either a Type 2 seat belt assembly with a nondetachable shoulder belt that conforms to Standard No. 209 (§ 571.209), or a Type 1 seat belt assembly such that with a test device restrained by the assembly the vehicle meets the frontal crash protection requirements of S5.1 in a perpendicular impact.

(b) At any center front designated seating position, have a Type 1 or Type 2 seat belt assembly that conforms to Standard No. 209 (§ 571.209) and to S7.1 and S7.2 of this standard, and a seat belt warning system that conforms to S7.3; and

(c) At each other designated seating position, have a Type 1 or Type 2 seat belt assembly that conforms to Standard No. 209 (§ 571.209) and S7.1 and S7.2 of this standard. (39 F.R. 38380—October 31, 1974. Effective: 10/29/74)]

S4.1.2.3.2 [Convertibles and open-body type vehicles shall at each designated seating position have a Type 1 or Type 2 seat belt assembly that conforms to Standard No. 209 (§ 571.209) and to S7.1 and S7.2 of this standard, and at each front designated seating position have a seat belt warning system that conforms to S7.3. (39 F.R. 38380—October 31, 1974. Effective: 10/29/74)]

S4.1.3 [Reserved. (40 F.R. 33977—August 13, 1975. Effective: 8/13/75)]

S4.2 Trucks and multipurpose passenger vehicles with GVWR of 10,000 pounds or less.

S4.2.1 [Trucks and multipurpose passenger vehicles, with GVWR of 10,000 pounds or less, manufactured from January 1, 1972, to December 31, 1975. Each truck and multipurpose passenger vehicle with a gross vehicle weight rating

*Changed by 41F.R.36494 (see page A-12).

of 10,000 pounds or less, manufactured from January 1, 1972, to December 31, 1975, inclusive, shall meet the requirements of S4.2.1.1 or S4.2.1.2, or at the option of the manufacturer, the requirements of S4.2.2. A protection system that meets the requirement of S4.2.1.1 may be installed at one or more designated seating positions of a vehicle that otherwise meets the requirements of S4.2.1.2. (40 F.R. 28805—July 9, 1975. Effective: 7/9/75)]

S4.2.1.1 First option—complete passive protection system. The vehicle shall meet the crash protection requirements of S5 by means that require no action by vehicle occupants.

S4.2.1.2 Second option—belt system. The vehicle shall have seat belt assemblies that conform to Standard 209 installed as follows:

(a) A Type 1 or Type 2 seat belt assembly shall be installed for each designated seating position in convertibles, open-body type vehicles, and walk-in van-type trucks.

(b) In all vehicles except those for which requirements are specified in S4.2.1.2(a), a Type 2 seat belt assembly shall be installed for each outboard designated seating position that includes the windshield header within the head impact area, and a Type 1 or Type 2 seat belt assembly shall be installed for each other designated seating position.

S4.2.2 [Trucks and multipurpose passenger vehicles, with GVWR of 10,000 pounds or less, manufactured from January 1, 1976, to August 14, 1977. Each truck and multipurpose passenger vehicle, with a gross vehicle weight rating of 10,000 pounds or less, manufactured from January 1, 1976, to August 14, 1977, inclusive, shall meet the requirements of S4.1.2 (as specified for passenger cars), except that forward control vehicles, convertibles, open-body type vehicles, walk-in van-type trucks, motor homes, and vehicles carrying chassis-mount campers may instead meet the requirements of S4.2.1.2. (40 F.R. 28805—July 9, 1975. Effective: 7/9/75)]

S4.2.3 Trucks and multipurpose passenger vehicles, with GVWR of 10,000 pounds or less, manufactured on or after August 15, 1977. Each truck and multipurpose passenger vehicle, with a gross vehicle weight rating of 10,000 pounds or less, manufactured on or after August 15, 1977, shall meet the occupant crash protection requirements of S5 by means that require no action by vehicle occupants, except that forward control vehicles may instead meet the requirements of S4.2.1.2, and convertibles, open-body vehicles, walk-in van-type trucks, motor homes, and vehicles carrying chassis-mounted campers may instead meet the requirements of S4.1.2.2.

S4.3 Trucks and multipurpose passenger vehicles, with GVWR of more than 10,000 pounds. Each truck and multipurpose passenger vehicle, with a gross vehicle weight rating of more than 10,000 pounds, manufactured on or after January 1, 1972, shall meet the requirements of S4.3.1 or S4.3.2. A protection system that meets the requirements of S4.3.1 may be installed at one or more designated seating positions of a vehicle that otherwise meets the requirements of S4.3.2.

S4.3.1 First option—complete passive protection system. The vehicle shall meet the crash protection requirements of S5 by means that require no action by vehicle occupants.

S4.3.2 Second option—belt system. The vehicle shall, at each designated seating position, have either a Type 1 or a Type 2 seatbelt assembly that conforms to Standard No. 209.

S4.4 Buses. Each bus manufactured on or after January 1, 1972, shall meet the requirements of S4.4.1 or S4.4.2.

S4.4.1 First option—complete passive protection system—driver only. The vehicle shall meet the crash protection requirements of S5, with respect to an anthropomorphic test device in the driver's designated seating position, by means that require no action by vehicle occupants.

S4.4.2 Second option—belt system—driver only. The vehicle shall, at the driver's designated seating position, have either a Type 1 or a Type 2 seatbelt assembly that conforms to Standard No. 209.

S4.5 Other general requirements.

S4.5.1 Labeling and driver's manual information. [Each vehicle shall have a label setting forth the manufacturer's recommended schedule for the maintenance or replacement, necessary to retain the performance required by this standard, of any crash deployed occupant protection system. The schedule shall be specified by month

and year, or in terms of vehicle mileage, or by intervals measured from the date appearing on the vehicle certification label provided pursuant to 49 CFR Part 567. The label shall be permanently affixed to the vehicle within the passenger compartment and lettered in English in block capitals and numerals not less than three thirty-seconds of an inch high. Instructions concerning maintenance or replacement of a system and a description of the functional operation of the system shall be provided with each vehicle, with an appropriate reference on the label. If a vehicle owner's manual is provided, this information shall be included in the manual. (39 F.R. 1513—January 10, 1974. Effective: 1/10/74)]

S4.5.2 Readiness indicator. [An occupant protection system that deploys in the event of a crash shall have a monitoring system with a readiness indicator. The indicator shall monitor its own readiness and shall be clearly visible from the driver's designated seating position. A list of the elements of the system being monitored by the indicator shall be included with the information furnished in accordance with S4.5.1 but need not be included on the label. (36 F.R. 1254—October 1, 1971. Effective: 1/1/72)]

[**S4.5.3 Passive belts.** Except as provided in S4.5.3.1, a seat belt assembly that requires no action by vehicle occupants (hereinafter referred to as a "passive belt") may be used to meet the crash protection requirements of any option under S4 and in place of any seat belt assembly otherwise required by that option.

S4.5.3.1 A passive belt that provides only pelvic restraint may not be used pursuant to S4.5.3 to meet the requirements of an option that requires a Type 2 seat belt assembly.

S4.5.3.2 A passive belt, furnished pursuant to S4.5.3, that provides both pelvic and upper torso restraint may have either a detachable or non-detachable upper torso portion, notwithstanding provisions of the option under which it is furnished.

S4.5.3.3 [A passive belt furnished pursuant to S4.5.3 shall—

(a) Conform to S7.1 and S7.2 of this standard; and

(b) In place of a warning system that conforms to S7.3 or S7.3a of this standard, be equipped with a warning system as specified in subparagraph (1), except that a seat belt assembly provided in a vehicle that is manufactured prior to February 24, 1975, may, at the option of the manufacturer, be equipped with a warning system as specified in subparagraph (1) or as specified in subparagraph (2):

(1) At the left front designated seating position (driver's position), be equipped with a warning system that activates, for a period of not less than 4 seconds and not more than 8 seconds (beginning when the vehicle ignition switch is moved to the "on" or the "start" position), a continuous or flashing warning light, visible to the driver, displaying the words "Fasten Seat Belts" or "Fasten Belts" when condition (A) exists, and a continuous or intermittent audible signal when condition (A) exists simultaneously with condition (B).

(A) The vehicle's ignition switch is moved to the "on" position or to the "start" position.

(B) The driver's lap belt is not in use, as determined by the belt latch mechanism not being fastened.

(2) Be equipped with a warning system that activates, for at least one minute, a continuous or intermittent audible signal and a continuous or flashing warning light, visible to the driver, displaying the words "Fasten Seat Belts" or "Fasten Belts", whenever the ignition switch is in the "start" position and the latch mechanism is not fastened, and whenever the vehicle engine is running, the transmission gear selector is placed in any forward position, and the latch mechanism is not fastened. (39 F.R. 42692—December 6, 1974. Effective: 12/3/74)]

S4.5.3.4 A passive belt furnished pursuant to S4.5.3 that is not required to meet the perpendicular frontal crash protection requirements of S5.1 shall conform to the webbing, attachment hardware, and assembly performance requirements of Standard No. 209. (36 F.R. 23725—December 14, 1971. Effective: 1/1/72)]

S5. Occupant crash protection requirements.

S5.1 Frontal barrier crash. [When the vehicle, traveling longitudinally forward at any speed up to and including 30 m.p.h., impacts a fixed

collision barrier that is perpendicular to the line of travel of the vehicle, or at any angle up to 30° in either direction from the perpendicular to the line of travel of the vehicle, under the applicable conditions of S8, with anthropomorphic test devices at each designated seating position for which a barrier crash test is required under S4, it shall meet the injury criteria of S6. (37 F.R. 3911—February 24, 1972. Effective: 2/24/72)]

S5.2 Lateral moving barrier crash. When the vehicle is impacted laterally on either side by a barrier moving at 20 m.p.h., with test devices at the outboard designated seating positions adjacent to the impacted side, under the applicable conditions of S8, it shall meet the injury criteria of S6.

S5.3 Rollover. When the vehicle is subjected to a rollover test in either lateral direction at 30 m.p.h. with test devices in the outboard designated seating positions on its lower side as mounted on the test platform, under the applicable conditions of S8, it shall meet the injury criteria of S6.1. [However, vehicles manufactured before August 15, 1977, that conform to the requirements of Standard No. 216 (§ 571.216) need not conform to this rollover test requirement (36 F.R. 23299—December 8, 1971. Effective: 1/1/72)]

S.6 Injury criteria.

S6.1 All portions of the test device shall be contained within the outer surfaces of the vehicle passenger compartment throughout the test.

S6.2 [The resultant acceleration at the center of gravity of the head shall be such that the expression:

$$\left[\frac{1}{t_2 - t_1} \int_{t_1}^{t_2} a\,dt \right]^{2.5} (t_2 - t_1)$$

shall not exceed 1,000, where a is the resultant acceleration expressed as a multiple of g (the acceleration of gravity), and t_1 and t_2 are any two points in time during the crash. However, in the case of a passenger car manufactured before August 31, 1976, or a truck or multipurpose passenger vehicle with a GVWR of 10,000 pounds or less manufactured before August 15, 1977, when the dummy is restrained by a seat belt system, t_1 and t_2 are any two points in time during any interval in which the head is in continuous contact with a part of the vehicle other than the belt system. (40 F.R. 33977—August 13, 1975. Effective: 8/13/75)]

S6.3 [The resultant acceleration at the center of gravity of the upper thorax shall not exceed 60g, except for intervals whose cumulative duration is not more than 3 milliseconds. However, in the case of a passenger car manufactured before August 31, 1976, or a truck or multipurpose passenger vehicle with a GVWR of 10,000 pounds or less manufactured before August 15, 1977, the resultant acceleration at the center of gravity of the upper thorax shall be such that the severity index calculated by the method described in SAE Information Report J885a, October, 1966, shall not exceed 1,000. (40 F.R. 33977—August 13, 1975. Effective: 8/13/75)]

S6.4 [The force transmitted axially through each upper leg shall not exceed 1,700 pounds. (37 F.R. 24903—November 23, 1972. Effective: 11/23/72)]

S7. Seat belt assembly requirements—passenger cars.

S7.1 Adjustment.

S7.1.1 Except as specified in S7.1.1.1 and S7.1.1.2, the lap belt of any seat belt assembly furnished in accordance with S4.1.1 and S4.1.2 shall adjust by means of an emergency-locking or automatic-locking retractor that conforms to Standard No. 209 to fit persons whose dimensions range from those of a 50th-percentile 6-year-old child to those of a 95th-percentile adult male and the upper torso restraint shall adjust by means of an emergency-locking retractor or a manual adjusting device that conforms to Standard No. 209 to fit persons whose dimensions range from those of a 5th-percentile adult female to those of a 95th-percentile adult male, with the seat in any position and the seat back in the manufacturer's nominal design riding position. [However, an upper torso restraint furnished in accordance with S4.1.2.3.1(a) shall adjust by means of an emergency-locking retractor that conforms to Standard No. 209. (37 F.R. 3911—February 24, 1972. Effective: 2/24/72)]

S7.1.1.1 A seat belt assembly installed at the driver's seating position shall adjust to fit persons whose dimensions range from those of a 5th-percentile adult female to those of a 95th-percentile adult male.

S7.1.1.2 A seat belt assembly installed at any designated seating position other than the outboard positions of the front and second seats shall adjust either by a retractor as specified in S7.1.1 or by a manual adjusting device that conforms to Standard No. 209.

S7.1.2 The intersection of the upper torso belt with the lap belt in any Type 2 seat belt assembly furnished in accordance with S4.1.1 or S4.1.2, with the upper torso manual adjusting device, if provided, adjusted in accordance with the manufacturer's instructions, shall be at least 6 inches from the front vertical centerline of a 50th-percentile adult male occupant, measured along the centerline of the lap belt, with the seat in its rearmost and lowest adjustable position and with the seat back in the manufacturer's nominal design riding position.

S7.1.3 The weights and dimensions of the vehicle occupants specified in this standard are as follows:

	50th-percentile 6-year-old child	5th-percentile adult female	50th-percentile adult male	95th-percentile adult male
Weight	47.3 pounds	102 pounds	164 pounds	215 pounds.
Erect sitting height	25.4 inches	30.9 inches	35.7 inches	38 inches.
Hip breadth (sitting)	8.4 inches	12.8 inches	14.5 inches	16.5 inches.
Hip circumference (sitting)	23.9 inches	36.4 inches	42 inches	47.2 inches.
Waist circumference (sitting)	20.8 inches	23.6 inches	33 inches	42.5 inches.
Chest depth		7.5 inches	9 inches	10.5 inches.
Chest circumference:				
(nipple)		30.5 inches	37.7 inches	44.5 inches.
(upper)		29.8 inches		
(lower)		26.6 inches		

S7.2 Latch mechanism. A seat belt assembly installed in a passenger car shall have a latch mechanism—

(a) Whose components are accessible to a seated occupant in both the stowed and operational positions;

[(b) That releases both the upper torso restraint and the lap belt simultaneously, if the assembly has a lap belt and an upper torso restraint that require unlatching for release of the occupant; and (39 F.R. 14593—April 25, 1974. Effective: 5/27/74)]

(c) That releases at a single point by a push-button action.

S7.3 Seat belt warning system. [A seat belt assembly provided in accordance with S4.1 shall be equipped with a seat belt warning as specified in S7.3a, except that a seat belt assembly provided in accordance with S4.1 in a vehicle manufactured prior to February 24, 1975, may, at the option of the manufacturer, be equipped with either a seat belt warning as specified in S7.3.1 through S7.3.5 or a seat belt warning as specified in S7.3a. (39 F.R. 42692—December 6, 1974. Effective: 12/3/74)]

S7.3.1 [Seat belt assemblies provided at the front outboard seating positions in accordance with S4.1.1 or S4.1.2 shall have a warning system that activates, for at least one minute, a continuous or intermittent audible signal and continuous or flashing warning light, visible to the driver, displaying the words "Fasten Seat Belts" or "Fasten Belts" when condition (a) exists simultaneously with either of conditions (b) or (c).

[(a) The vehicle's engine is operating and the transmission gear selector is in any forward position. (36 F.R. 23725—December 14, 1971. Effective: 1/1/72)]

(b) [The driver's lap belt is not in use, as determined, at the manufacturer's option, either by the belt latch mechanism being fastened or by the belt being extended at least 4 inches from its stowed position. (37 F.R. 3911—February 24, 1972. Effective: 2/24/72)]

(c) [A person of at least the weight of a 50th percentile adult male is seated with the belt fastened at the driver's position, and a person of at least the weight of a 50th percentile 6-year-old child is seated in the right front designated seat-

ing position and the lap belt for that position is not in use, as determined, at the manufacturer's option, either by the belt latch mechanism being fastened or by the belt being extended at least 4 inches from its stowed position. (37 F.R. 3911—February 24, 1972. Effective: 2/24/72)]

S7.3.2 The warning system shall either—

[(a) Not activate when the lap belt at each occupied front outboard seating position is extended to any length greater than the length necessary to fit a 50th-percentile 6-year-old child when the seat is in the rearmost and lowest adjustment position;

(b) Not activate when the lap belt at each occupied front outboard position is buckled; or

(c) Not activate when the operation specified in (a) or (b) is performed at each occupied front outboard seating position after the occupant is seated. (37 F.R. 132065—July 6, 1972. Effective: 1/1/73)]

S7.3.3 [The warning systems shall not activate if the vehicle has an automatic transmission, the engine is operating, and the gear selector is in the "Park" position. (37 F.R. 3911—February 24, 1972. Effective: 2/24/72)]

S7.3.4 [Notwithstanding the provisions of S7.3.1 and S7.3.5.2, when the engine of a vehicle with a manual transmission is operating, the warning system shall either—

(a) Not activate when the transmission is in neutral; or

(b) Not activate when the parking brake is engaged.

S7.3.5 [The above provisions of S7.3 shall apply to seat belt assemblies furnished in accordance with S4.1.2.3, with the following exceptions: (39 F.R. 38380—October 31, 1974. Effective: 10/29/74)]

S7.3.5.1 The warning system shall also be provided for the center front seating position, if any.

S7.3.5.2 In addition to the conditions specified in S7.3.1, the warning system shall activate if—

(a) The vehicle's engine is operating and the transmission gear selector is in any forward position, and

(b) A person of at least the weight of a 50th percentile adult male is seated with the belt fastened at the driver's position, and a person of at least the weight of a 5th percentile adult female is seated in a center front designated seating position and the lap belt for the center front position is not in use, as determined, at the manufacturer's option, either by the belt latch mechanism being fastened or the belt being extended at least 4 inches from its stowed position.

S7.3.5.3 The provisions of S7.3.2 shall apply to all front seating positions.

S7.3.5.4 [Notwithstanding the other provisions of S7.3, the warning system shall activate whenever the ignition switch is in the "start" position and the operation of the belt system at each occupied front outboard designated seating position has not been performed after the occupant is seated and condition (a) or (b) exists. Belt operation for the purpose of this requirement shall be, at the manufacturer's option, either the extension of the belt assembly at least 4 inches from its stowed position, or the fastening of the belt latch mechanism.

(a) A person of at least the weight of a 5th-percentile adult female is seated at the driver's seating position.

(b) A person of at least the weight of a 50th-percentile adult male is seated at the driver's seating position and a person of at least the weight of a 50th-percentile 6-year-old child is seated at the right front seating position. (39 F.R. 38380—October 31, 1974. Effective: 10/29/74)]

[**S7.3a** A seat belt assembly provided at the driver's seating position shall be equipped with a warning system that activates, for a period of not less than 4 seconds and not more than 8 seconds (beginning when the vehicle ignition switch is moved to the "on" or the "start" position), a continuous or flashing warning light, visible to the driver, displaying the words "Fasten Seat Belts" or "Fasten Belts" when condition (a) exists, and a continuous or intermittent audible signal when condition (a) exists simultaneously with condition (b).

(a) The vehicle's ignition switch is moved to the "on" position or to the "start" position.

(b) The driver's lap belt is not in use, as determined, at the option of the manufacturers, either by the belt latch mechanism not being fastened, or by the belt not being extended at least 4 inches from its stowed position. (39 F.R. 42692—December 6, 1974. Effective: 12/3/74)]

S7.4 Belt interlock system. [Revoked. (39 F.R. 38380—October 31, 1974. Effective: 10/29/74)]

S8. Test conditions.

S8.1 General conditions. The following conditions apply to the frontal, lateral, and rollover tests.

S8.1.1 The vehicle, including test devices and instrumentation, is loaded as follows:

(a) *Passenger cars.* A passenger car is loaded to its unloaded vehicle weight plus its rated cargo and luggage capacity weight, secured in the luggage area, plus the weight of the necessary anthropomorphic test devices.

(b) *Multipurpose passenger vehicles, trucks, and buses.* [A multipurpose passenger vehicle, truck, or bus is loaded to its unloaded vehicle weight plus 300 pounds or its rated cargo and luggage capacity weight, whichever is less, secured in the load carrying area and distributed as nearly as possible in proportion to its gross axle weight ratings, plus the weight of the necessary anthropomorphic test devices. (36 F.R. 19254—October 1, 1971. Effective: 1/1/72)]

S8.1.2 Adjustable seats are in the adjustment position midway between the forwardmost and rearmost positions, and if separately adjustable in a vertical direction, are at the lowest position.

S8.1.3 Adjustable seat backs are in the manufacturer's nominal design riding position.

S8.1.4 Adjustable steering controls are adjusted so that the steering wheel hub is at the geometric center of the locus it describes when it is moved through its full range of driving positions.

S8.1.5 Movable vehicle windows and vents are in the fully closed position.

S8.1.6 Convertibles and open-body type vehicles have the top, if any, in place in the closed passenger compartment configuration.

S8.1.7 Doors are fully closed and latched but not locked.

S8.1.8 [Anthropomorphic test devices used for the evaluation of restraint systems manufactured pursuant to sections S4.1.2.1 and S4.1.2.2 conform to the requirements of Part 572 of this title. (38 F.R. 20449—August 1, 1973. Effective: 8/15/73)]

S8.1.9 Each test device is clothed in form-fitting cotton stretch garments.

S8.1.10 [Limb joints are set at *1g*, barely restraining the weight of the limb when extended horizontally. Leg joints are adjusted with the torso in the supine position. (38 F.R. 20449—August 1, 1973. Effective: 8/15/73)]

S8.1.11 Each test device is firmly placed in a designated seating position in the following manner:

(a) The head is aligned by placing the test device on its back on a rigid, level surface and by adjusting the head so that it touches the level surface and is laterally centered with respect to the device's axis of symmetry.

(b) The test device is placed in the vehicle in the normal upright sitting position and a rigid roller, 6 inches in diameter and 24 inches long, is placed transversely as low as possible against the front of the torso.

(c) The roller is pressed horizontally against the torso with a force of 50 pounds.

(d) Force is applied at the shoulder level to bend the torso forward over the roller, flexing the lower back, and to return the test device to the upright sitting posture.

(e) The roller is slowly released.

S8.1.12 Except as otherwise herein specified, the test devices are not restrained during impacts by any means that require occupant action.

S8.1.13 [The hands of the test device in the driver's designated seating position are on the steering wheel rim at the horizontal centerline. The right foot rests on the undepressed accelerator pedal, with the heel in contact with the point where the centerline of the upper surface of the undepressed accelerator pedal intersects the upper surface of the floor covering. The left leg is placed as in S8.1.14. (36 F.R. 19254—October 1, 1971. Effective: 1/1/72)]

S8.1.14 The hands of each other test device are resting on the seat with the palms touching the legs, and the upper arms are resting against the seat back and flush with the body. Where possible, the legs are outstretched, with the thighs

on the seat and the heels touching the floor with the foot at 90° to the tibia. Otherwise, the tibia are vertical with the feet resting on the floor. The left leg of a test device in the center front designated seating position is on the vehicle centerline, and the right leg is in the right footwell. The left and right legs of a test device in the center rear designated seating position are in the left and right footwells, respectively.

S8.1.15 Instrumentation does not affect the motion of test devices during impact or rollover.

S8.2 Lateral moving barrier crash test conditions. The following conditions apply to the lateral moving barrier crash test:

S8.2.1 The moving barrier, including the impact surface, supporting structure, and carriage, weighs 4,000 pounds.

S8.2.2 The impact surface of the barrier is a vertical, rigid, flat rectangle, 78 inches wide and 60 inches high, perpendicular to its direction of movement, with its lower edge horizontal and 5 inches above the ground surface.

S8.2.3 During the entire impact sequence the barrier undergoes no significant amount of dynamic or static deformation, and absorbs no significant portion of the energy resulting from the impact, except for energy that results in translational rebound movement of the barrier.

S8.2.4 During the entire impact sequence the barrier is guided so that it travels in a straight line, with no significant lateral, vertical or rotational movement.

S8.2.5 The concrete surface upon which the vehicle is tested is level, rigid and of uniform construction, with a skid number of 75 when measured in accordance with American Society for Testing and Materials Method E-274-65T at 40 m.p.h., omitting water delivery as specified in paragraph 7.1 of that method.

S8.2.6 The tested vehicle's brakes are disengaged and the transmission is in neutral.

S8.2.7 The barrier and the test vehicle are positioned so that at impact—

(a) The vehicle is at rest in its normal attitude;

(b) The barrier is traveling in a direction perpendicular to the longitudinal axis of the vehicle at 20 m.p.h.; and

(c) A vertical plane through the geometric center of the barrier impact surface and perpendicular to that surface passes through the driver's seating reference point in the tested vehicle.

S8.3 Rollover test conditions. The following conditions apply to the rollover test:

S8.3.1 The tested vehicle's brakes are disengaged and the transmission is in neutral.

S8.3.2 The concrete surface on which the test is conducted is level, rigid, of uniform construction, and of a sufficient size that the vehicle remains on it throughout the entire rollover cycle. It has a skid number of 75 when measured in accordance with American Society of Testing and Materials Method E-274-65T at 40 m.p.h. omitting water delivery as specified in paragraph 7.1 of that method.

S8.3.3 The vehicle is placed on a device, similar to that illustrated in Figure 1, having a platform in the form of a flat, rigid plane at an angle of 23° from the horizontal. At the lower edge of the platform is an unyielding flange, perpendicular to the platform with a height of 4 inches and a length sufficient to hold in place the tires that rest against it. The intersection of the inner face of the flange with the upper face of the platform is 9 inches above the rollover surface. No other restraints are used to hold the vehicle in position during the deceleration of the platform and the departure of the vehicle.

S8.3.4 With the vehicle on the test platform, the test devices remain as nearly as possible in the posture specified in S8.1.

S8.3.5 Before the deceleration pulse, the platform is moving horizontally, and perpendicularly to the longitudinal axis of the vehicle, at a constant speed of 30 m.p.h. for a sufficient period of time for the vehicle to become motionless relative to the platform.

S8.3.6 The platform is decelerated from 30 to 0 m.p.h. in a distance of not more than 3 feet, without change of direction and without transverse or rotational movement during the deceleration of the platform and the departure of the vehicle. The deceleration rate is at least 20g for a minimum of 0.04 seconds.

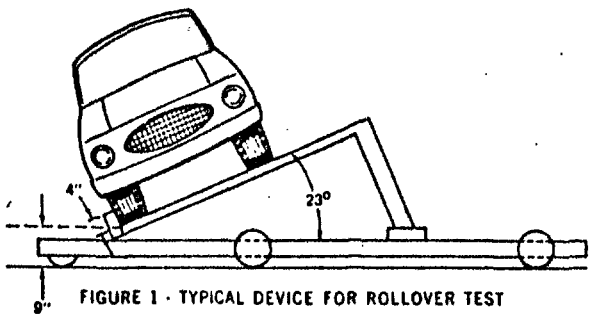

FIGURE 1 - TYPICAL DEVICE FOR ROLLOVER TEST

[**S9. Pressure vessels and explosive devices.**

S9.1 Pressure vessels. A pressure vessel that is continuously pressurized shall conform to the requirements of 49 CFR § 178.65-2, -6(b), -7, -9(a) and (b), and -10. It shall not leak or evidence visible distortion when tested in accordance with § 178.65-11(a) and shall not fail in any of the ways enumerated in § 178.65-11(b) when hydrostatically tested to destruction. It shall not crack when flattened in accordance with § 178.65-12(a) to the limit specified in § 178.65-12(a)(4). (37 F.R. 9222—May 6, 1972. Effective: 6/2/72)]

[**S9.2 Explosive devices.** An explosive device shall not exhibit any of the characteristics prohibited by 49 CFR § 173.51. All explosive material shall be enclosed in a structure that is capable of containing the explosive energy without sudden release of pressure except through overpressure relief devices or parts designed to release the pressure during actuation. (37 F.R. 9222—May 6, 1972. Effective: 6/2/72)]

[**Interpretation**

Several persons have raised questions as to what constitutes a "passive" restraint system—one that requires "no action by vehicle occupants"—as those concepts are used in Standard No. 208, Occupant Crash Protection (36 F.R. 4600, March 10, 1971), effective January 1, 1972. Specifically, it has been asked whether occupant protection systems that require occupants to take protective action as a prerequisite to entering, seating themselves in, or operating a vehicle can qualify as a system that requires "no action." One commonly discussed example of such "forced action" systems is a seatbelt interlock, which requires a seat belt to be fastened before the vehicle ignition system is operative.

The concept of an occupant protection system that requires "no action by vehicle occupants" as used in Standard No. 208 is intended to designate a system that requires no action other than would be required if the protective system were not present in the vehicle. Under this interpretation the concept does not include "forced action" systems as described above.

This interpretation is not intended to rule out the possibility that further rulemaking action may be taken in the future to permit such systems in certain cases. (36 F.R. 8296—May 4, 1971. Effective: 5/4/71)]

36 F.R. 4600
March 10, 1971

[Docket No. 74-14; Notice 06]

PART 571—FEDERAL MOTOR VEHICLE SAFETY STANDARDS

Occupant Crash Protection

This notice amends Standard No. 208, Occupant Crash Protection, to continue until August 31, 1977, the present three options available for occupant crash protection in passenger cars.

This extension of the present occupant crash protection options of Standard No. 208 (49 CFR 571.208) was proposed July 19, 1976 (41 FR 29715), along with several other subjects that will be the subject of a future notice. Vehicle manufacturers supported the proposal but requested that the options be extended indefinitely instead of being limited to a 1-year extension. Mr. Benjamin Redmond advocated the use of an interlock system to increase usage of active belt systems. Ms. Lucie Kirylak expressed a preference for active occupant crash protection systems. The National Motor Vehicle Safety Advisory Council did not take a position on the proposal.

The Secretary of Transportation has initiated a process for the establishment of future occupant crash protection requirements under Standard No. 208 (41 FR 24070, June 14, 1976). The Secretary's proposal addresses the long term issues involved, and this 1-year extension of requirements is intended to provide the time necessary to reach that decision. Because a 1-year extension is consistent with the process that has been established and because a longer extension was not proposed for comment, the NHTSA declines to extend the existing requirements as recommended by the manufacturers.

Other matters proposed in the notice that underlies this action will be treated at a later date, following the receipt of comments that are due on October 20, 1976.

The NHTSA notes that no effective date was proposed for the other matters addressed by the proposal. Those matters involve modification of the existing passive protection options so that they conform to the proposal of the Department of Transportation, and to reduce somewhat the femur force requirement. Also, further specification of dummy positioning in the vehicle was addressed. The agency proposes an immediate effective date for these changes, because they represent relaxation of the requirements. However, the views of interested persons, particularly Volkswagen (which is certifying compliance under one passive option), are solicited by October 20, 1976.

In consideration of the foregoing, the heading and text of S4.1.2 of Standard No. 208 (49 CFR 571.208) are amended by changing the date "August 31, 1976" to "August 31, 1977" wherever it appears.

Effective date: August 26, 1976.

(Secs. 103, 119, Pub. L. 89-563, 80 Stat. 718 (15 U.S.C. 1392, 1407); delegation of authority at 49 CFR 1.50.)

Issued on August 26, 1976.

JOHN W. SNOW,
Administrator.

[FR Doc.76-25428 Filed 8-26-76;1:15 pm]

APPENDIX E

DISCUSSION OF STATISTICAL METHODS

E.1 INTRODUCTION

A number of statistical techniques can be considered as analytical tools to evaluate the effects of implementing FMVSS 208. Four of these techniques are discussed in this appendix.

- Regression Analysis
- Contingency Table Analysis
- Log Linear Analysis
- Index Method Analysis.

E.2 REGRESSION ANALYSIS

Statistics uses the term regression in two senses, one a broad sense and the other a restriction of the broad sense to a more "specific" one. Before we discuss these two (or more) concepts a word should be said about the term "regression" since it has various connotations that are not appropriate to most work. In the previous century, the British scientist, Galton, studied the "intelligence" of fathers and first born sons and found that if the father was more "intelligent" than average, the son usually was also, but he tended to be more average than the father. Galton referred to this phenomenon as "regression of mediocrity." The first part of the term has stuck as the name of the whole technique of which Galton's work is merely an early example. By the way, the above does not imply that the next generation is less intelligent than the previous, since, for example, for sons more "intelligent" than average, the fathers tend to be more average than the sons.

In the current broad-sense usage, regression is the study of the functional relationship between a dependent variable and one or more independent variables. The choice of terms does not imply a cause-and-effect relationship. In fact, taking the extreme case, the dependent variable could be the cause and the independent variable the effect, e.g., if one tried to regress the size of a bomb on the amount of damage caused.

It would be somewhat more precise to say that regression is the study of the mean or average structure of the dependent variable by means of the independent variates. One is usually not trying (in a primary sense) to find the variability of distribution of the dependent variable from the other variates. It is true that the research does look at the variability, but only in the second sense of wanting to see the stability or precision of the functional relationship of the average values of the dependent and independent variables.

Some examples of general regression would be:

(1) Finding the relationship between a student's college record (quantity point ratio) and his/her high school record, college boards and other records.

(2) The position of a stellar object as a function of time and previous positions.

(3) The probability of rain as a function of air pressure, previous weather, temperature, etc.

(4) The probability of a person's having blond hair as a function of whether or not he is Swedish, whether he is under 10 years, between 10 and 20,and over 20, etc.

This general restricted concept of regression considers dependent variables that have an interval scale, usually independent variables that are interval scaled,and a random error term. The random error term is assumed to be normally distributed. The independent variables are either values that can be adjusted by the researcher (e.g., the speed at which a test vehicle is driven) or normal random variables (e.g., the speeds of the cars in the population of cars considered is assumed to have a normal distribution). Both of these assumptions imply, in the linear case, that the dependent variable is normally distributed.

As an example, we might be interested in a model regressing fuel consumption per mile F, on velocity of the vehicle V, the weight W, and the horsepower H. As a first approximation, we would have:

$$F = \mu + \alpha V + \beta W + \delta H + \varepsilon,$$

where ε is the random error term. Since each of the independent variables appears as a linear (first degree) term, we call this a linear equation. If we run the experiment under lab conditions and choose the speed, weight and horsepower values, these are considered fixed values and ε is usually assumed to have a normal distribution. On the other hand, if the data are sampled (collected) from a random selection of actual vehicles, then the values of the independent variables are not selected by the researcher and, in fact, have random distributions due to the random selection. However, the estimation of the usually unknown coefficients is, in both cases, carried out by least squares analysis. To accomplish this for all the data, we choose the values of m, a, b, c to minimize the summation

$$\Sigma\ (F_i - m - aV_i - bW_i - cH_i)^2.$$

The objective is to find the precise equation that is closest to the observed data. If we consider the equation, $F = \mu + dV$, then graphically we can obtain the following illustration.

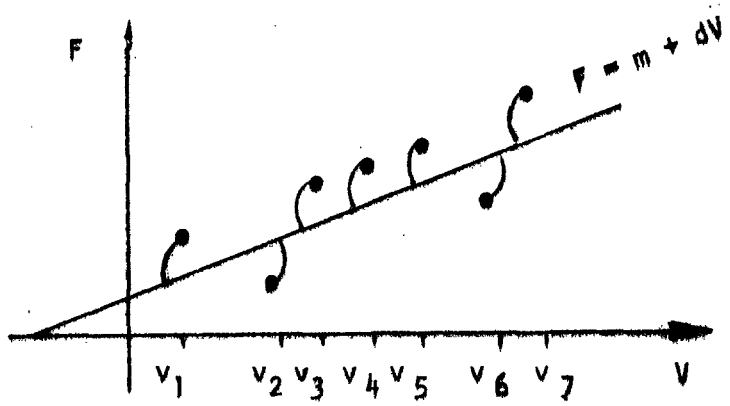

If the dots represent the data points, the line $F = m + dV$ is chosen so that the sum of the squared distances represented by ")" is as small as possible. In order to judge whether or not the line gives a good fit to that data, we compare the original variability of the data from a horizontal line,

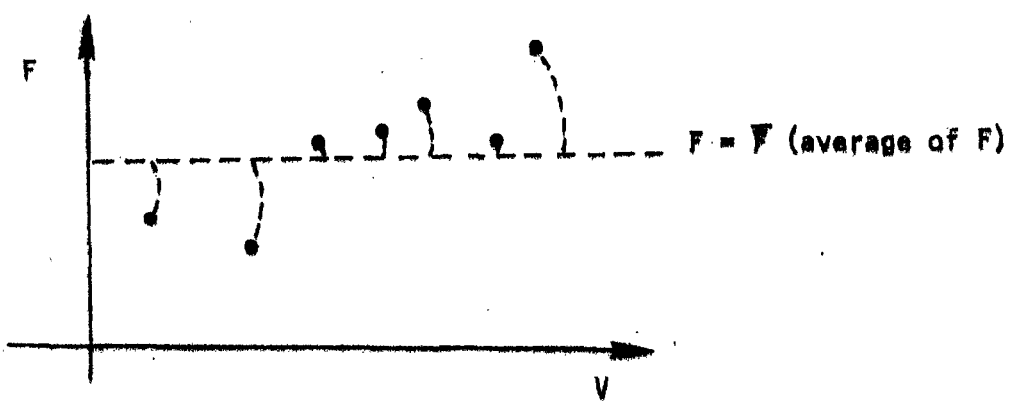

with the sum of the squared distances from the sloping line. If the sloping line is a good fit there should be a substantial denumeration of the variability.

In practice there are various difficulties that can only be handled approximately at this stage of statistical development. In general, data are not normally distributed. In many cases the linear equation does not fit the data well enough and higher order terms are needed. However, if V is normally distributed, then V^2, V^3, etc. are not. Nonetheless, the procedure seems to work quite well even when the assumptions of normality are not satisfied. One of its great advantages is its widespread use in many applied fields. Furthermore, the procedures are quite standard and secondary analyses, such as comparing coefficients, can be done with little difficulty. On the other hand if the data, especially the dependent variable, are ordinal or nominal and if the range of the dependent variable is bounded, the results can be less than satisfactory. Also, if the dependent variable is not approximately normally distributed, the procedure is not as efficient as others that use any distributional knowledge. In addition, various statistical tests can be misleading if the distributional model does not reflect the true nature of the data in certain aspects.

E.3 CONTINGENCY TABLE ANALYSIS

A more recent development has been that of contingency table analysis based on log linear models. While the basic contingency table analysis goes back to Karl Pearson and his chi-square test, the log linear means structure is a more recent development.

In the Pearson chi-square v x c table, we usually have two factors or variables, for example, degree of injury and speed. These are made categorical e.g., injury is on the scale of slight or none, moderate or severe, while speed might be slow or fast. The body of the table contains the number of cases in each r and their respective probabilities (the latter) usually unknown in practice category.

	SPEED		
INJURY	Slow	Fast	
Slight or None	100_{P11}	110_{P12}	210_{P1+}
Moderate or Severe	50_{P21}	80_{P22}	130_{P2+}
	150_{P+1}	190_{P+2}	340

$P_{1+} = P_{11}+P_{12}$, $P_{+1} = P_{11}+P_{21}$, etc.
and $P_{11}+P_{12} + P_{21} + P_{22} = 1$.

The usual chi-square analysis would give*

$$\chi^2 = \frac{(100-92.65)^2}{92.65} + \frac{(110-117.35)^2}{117.35} + \frac{(80-72.65)^2}{72.65} + \frac{(50-57.35)^2}{57.35} = 2.44$$

with 1 degree of freedom. The value 2.44 is not significant at $\alpha = 0.10$.

This result indicates that there is no dependence between speed and injury (for these data) and so the apparent discrepancies are due to random fluctuation. However, an interpretation of the effects of speed and injury is not all that clear.

E.4 LOG LINEAR ANALYSIS

A log linear model can be formulated such that

$$\log P_{ij} = \mu + \Lambda_i + M_j + (\Lambda M)_{ij},$$

where

$$\Lambda_1 + \Lambda_2 = 0;\ M_1 + M_2 = 0;\ (\Lambda M)_{1j} + (\Lambda M)_{2j} = 0;\ (\Lambda M)_{i1} + (\Lambda M)_{i2} = 0;$$

and Λ is the effect of injury (deviation of frequency of injury from the average) and M is the speed effect and (ΛM) is the interaction, i.e., how much different speeds affect different levels of injury. This formula also gives the expected number E_{ij} in each cell ij as

$$\begin{aligned} \log E_{ij} &= \log NP_{ij} = \log N + \log P_{ij} \\ &= \log N + \mu + \Lambda_i + M_j + (\Lambda M)_{ij} \\ &= \mu' + \Lambda_i + M_j + (\Lambda M)_{ij} \end{aligned}$$

where N is the total number of cases.

The above χ^2 test tells us that $(\Lambda M)_{ij} = 0$ for all vehicle speeds, Λ_{ij}. Thus, we can say by appropriate analysis that the estimates of the E_{ij} are $\hat{E}_{11} = 92.65$, $\hat{E}_{12} = 117.35$, $\hat{E}_{21} = 57.35$, and $\hat{E}_{22} = 72.65$ and $\hat{\mu} = 4.41$, $\Lambda_1 = -\Lambda_2 = 0.237$, $\hat{M}_1 = -\hat{M}_2 = -0.121$. One can check these values of μ, the $\hat{M}$'s and the $\hat{\Lambda}$'s given the appropriate $\hat{E}_{ij}$'s. While this analysis can be done without the log linear model for this simple case, the model can easily be extended to more variables with the interpretation being similar to the usual analysis of variance. By extending the model we could include other factors such as weight of vehicle.

---

* In general, $\chi^2 = \Sigma \dfrac{(\text{Observed}_{ij} - \text{Expected}_{ij})^2}{\text{Expected}_{ij}}$

An important property of the model is that it uses the discrete, multinomial character of the data, something the normal model fails to do. This fact should make the analysis more precise. However, one failing of such an analysis is that the dependent and independent variables are made discrete, which means that we cannot force the model to accept any ordering that we wish, e.g., we cannot force the effect of speed to be monotonic increasing.

Another choice of analysis is to allow the contingency table analysis to have a functional relationship that has continuous and discrete independent variables. One would still have the advantage of the underlying multinomial distribution but this would allow the type of interval variables that are found in the regression concept. Namely, consider models of the form $\log P = \mu + \Lambda_i + aC$ where Λ_i is discrete as before and the C is a continuous variable. Such an analysis should also consider interaction terms, e.g., what is the effect of impact angle with or without a head restraint.

APPENDIX F

INTRODUCTION DATES FOR SIDE DOOR REINFORCEMENT BEAMS

APPENDIX F: INTRODUCTION DATES OF SIDE DOOR REINFORCEMENT BEAMS

Make	Line	Series	Model Year
AMC	Javelin	SST	1971
		Basic	1971
		AMX	1971
GM			
Buick	Buick	Electra	1969
		La Sabre	1969
		Riviera	1971
	Special/Skylark	Skylark	1970
		GS	1970
Cadillac	Cadillac	Calais	1969
		De Ville	1969
		El Dorado	1971
		Fleetwood El Dorado	1971
		Fleetwood Brougham	1969
		Fleetwood Seventy-five	1969
		Fleetwood Sixty Special	1969
Chevrolet	Chevelle	Concours	1970
		Malibu	1970
		Nomad	1970
		Greenbriar	1970
	Chevrolet	Bel Air	1969
		Biscayne	1969
		Caprice	1969
		Kingswood	1969
	Monte Carlo	Monte Carlo	1970
	Vega	Vega	1971
Oldsmobile	F-85/Cutlass	F-85	1970
	Oldsmobile	Delta 88	1969
		98	1969
	Toronado	Toronado	1971
Pontiac	Firebird	Firebird	1970
		Esprit	1970
		Formula	1970
		Trans-Am	1970
	Pontiac	Bonneville	1969
		Catalina	1969
		Executive	1969
		Grand Prix	1969
	Tempest/LeMans	Le Mans	1970
CHRYLSER			
Dodge	Challenger	Challenger	1970
		Challenger RT	1971
FORD			
Ford	Fairline/Torino	Gran Torino	1972
	Ford	Custom	1971
		Galaxie	1971
		LTD Brougham	1971
	Mustang	Mustang	1971
		Grande	1971
	Pinto	Pinto	1971
	Thunderbird	Thunderbird	1972
Lincoln	Lincoln	Continental	1971
		Continental Mark III & IV	1971
Mercury	Cougar	Cougar	1971
		Cougar XR 7	1971
	Mercury	Marquis	1971
		Marquis Brougham	1971
		Monterey	1971
	Montego	Montego	1972
		Montego MX, Brougham, & GT	1972

APPENDIX G

COST ESTIMATING METHODOLOGIES USED BY BLS, GAO, AND NHTSA

APPENDIX G: COST ESTIMATING METHODOLOGIES USED BY BLS, GAO, AND NHTSA*

There are several methods for estimating the cost of consumers of FMVSS; GAO, NHTSA, and BLS use different methods. The methods used by the three organizations were reviewed by reading descriptions of the methods and discussing the cost estimating problem with responsible individuals in each organization. The main problems recognized by the three organizations were:

- Magnitude of the problem. A large number of models must be examined according to size, popularity and different design concepts.
- Lifetime Cost. The cost of any system includes initial costs and any added maintenance and operating costs. In standards where design changes lead to weight increases, the increased operating cost is an important consideration.
- Innovation. The initial cost of a safety related feature may decrease with engineering innovations. There is also the fact that substitution of lighter materials can reduce the additional operating costs.
- Marginal Cost Concept. If all safety standards were eliminated, manufacturers would not remove all safety features from all vehicles. For some vehicles in certain vehicle classes, some safety features would remain. The likely response of the manufacturers would be to design safety features in line with the overall design and price aspects. Therefore, the argument was made that the consumer cost of safety features is the difference in cost between what the manufacturers would provide if there were no standards versus what they do provide to meet the standards.

With regard to the last point, there are conceptual and practical difficulties. One problem arises in the comparison of the marginal cost of the safety feature with the estimated benefit due to injury reduction. The relative comparison would be more difficult and perhaps less meaningful if one had to estimate hypothetical costs and benefits which would exist without the standard. The practical problem would be trying to estimate the hypothetical cost and benefit levels. To estimate a meaningful measure imprecisely is no worse than to estimate a meaningless measure precisely.

In general, the cost estimating methods vary in proportion to their reliance on industry-supplied estimates. The GAO relied very heavily on the

*BLS - Bureau of Labor Statistics
GAO - General Accounting Office
NHTSA - National Highway Traffic Safety Administration

manufacturers' cooperation and help in providing documentation to develop the estimates which they used in their report.* The GAO has a unique position within the Federal Government and had strict agreements on the confidentiality of information with the manufacturers. NHTSA has the authority to request similar information from the manufacturers. However, NHTSA relies on its own inhouse engineering staff to provide initial estimates of the costs. Discussion continues with the manufacturers on the accuracy of these initial estimates. Written interrogatories may take place to improve the initial NHTSA estimates. An additional step which is taken if the estimated costs are still uncertain is to contract with independent industrial engineering firms for estimates. The BLS gathers information on the cost of safety features in order to exclude those price changes from the compilation of the Consumer Price Index (CPI) for new cars. The addition of the safety features is classified as a quality change in the product. The manufacturers reply to written questionnaires on the cost of specific safety related equipment on a selected sample of 16 vehicles. The GAO and BLS estimates are only initial costs. NHTSA tries to estimate the additional costs over the life of the safety feature; initial, operating, and maintenance. The individual cost estimating methods are described in more detail below:

NHTSA's Approach**

Motor Vehicle Programs has established a three-step effort for estimating costs in support of rulemaking. The first effort is inhouse cost estimates by means of a standardized high-volume industrial-processing building-block cost estimating methodology; the second is dialog and questionnaires with industry, out of which information and estimates would be provided. The third effort is contracting with non-government sources to establish neutral cost estimates. The inhouse cost estimating methodology covers 1) direct manufacturing; 2), indirect manufacturing; 3) capital investments; 4) manufacturing markups; 5) dealer markups; 6) taxes; 7) lifetime operating; 8) lifetime maintenance life-cycle cost factors.

---

*Report to the Committee on Commerce, United States Senate by the Comptroller General, *Effectiveness, Benefits, and Costs of Federal Safety Standards for Protection of Passenger Car Occupants*. Government Accounting Office, CED-76-121. July 7, 1976.

**Taken from NHTSA's *Approach for Determining the Consumer Cost of Motor Vehicle Programs' Rulemaking Programs* by Charles Westphal, Jr. of NHTSA's Motor Vehicle Programs Engineering Systems Staff and discussions with the author.

The basic precept of a building-block cost estimating methodology is that estimates, representative of the average impact, can be generated by utilizing historical information instead of relying on traditional methods for estimating costs. Fractional methods depend on the availability of 1) well-defined descriptions of proposed design concepts; 2) detailed bills of material; 3) manufacturers' detailed processing operations; 4) personnel with specialized judgment; and 5) individual manufacturer product plans.

In contrast to the traditional methods, "the estimating methodology 1) is useable with minimum aid from cost specialists, 2) considers the relationship of the timing of the effective date of the safety standard relative to the production cycle, 3) generates estimates credible to motor-vehicle cost and financial professionals, and 4) provides reasonable confidence backup data for public, congress, industry and court validation that motor-vehicle programs are in the public interest; i.e., reasonable, practicable and appropriate by Public Law 89-563."*

The principal steps involved in generating cost assessments via NHTSA's high-volume industrial-processing building-block methodology are 1) safety performance requirements are transformed into representative design concepts, 2) design concepts are broken down into representative high-volume industrial-processing operations, materials, and/or labor quantities and then 3) the costs of design concepts are determined by applying the cost per pound experienced in similar high-volume industrial-processing operations to the number of pounds of material making up the design.

In addition to the initial cost to the consumer, lifetime maintenance and operating costs are also calculated. These latter are important in comparing alternative design concepts. Cooperation has increased between the manufacturers and NHTSA which has decreased the time and cost of estimating the cost of safety standards from the level required by the more traditional method. However, it has been reported that considerable effort is still required to obtain and review the relevant detailed design drawings, identify the individual design concepts, and estimate the manufacturing costs.

---

*Ibid.

Government Accounting Office (GAO) Approach

The GAO approach was paraphrased above as the traditional method, obtaining:

1. Well-defined descriptions of proposed design concepts.
2. Detailed bills of material.
3. Descriptions of manufacturers' detailed processing operations.
4. Personnel with specialized knowledge.
5. Individual manufacturer product plans.

Although conversations with GAO staff were very helpful, they were constrained by professional and proprietary factors.* The GAO had considerable cooperation from the three largest domestic auto manufacturers and some information from two foreign manufacturers. Given the large number of standards considered and the alternative safety features designed, the GAO studied only selected representative models for each Standard. A significant factor is the different cost accounting systems used by each manufacturer.**

Bureau of Labor Statistics (BLS) Approach†

The BLS collects information on the costs of safety features so that these and other "quality" changes in the price of a new automobile are not reflected as an inflationary price increase. The BLS has only 16 cars in their sample and weights the factors for an average figure. BLS reports these quality changes for safety standards only after their effective date. If some manufacturers introduce safety features before the effective date, that change is initially reflected in an "other" quality change category. BLS only reports the industry supplied estimate of safety feature price changes once so that subsequent reductions in the cost of that feature are not taken into account.†† The BLS estimates of the cost of safety features may be good for the year in which they are introduced or upgraded and could serve as a check on estimates by GAO and NHTSA.

---

*Mr. Don Cluff, Project Manager, and Mr. John Pennington, Audit Supervisor discussed the basic approach and problems with CEM staff on Nov. 5, 1976.

**The accounting system may be related to the degree of vertical integration enjoyed by the firm.

†Personal communication with M. Voorhees, CPI Commodity Specialist, Bureau of Labor Statistics, Nov. 9, 1976.

††This fact will have a cumulative effect and thus the CPI for new cars might underestimate the real price inflation significantly.

APPENDIX H

A STATISTICAL METHOD FOR COST DATA ACQUISITION: HOW TO SELECT THE MAKE AND MODEL PRODUCED BY A MANUFACTURER

APPENDIX H: STATISTICAL DISCUSSION ON CHOOSING A PARTICULAR MAKE/MODEL WITHIN MANUFACTURER FOR COST DATA ACQUISITION

Consider any cell in the experimental design corresponding to a particular manufacturer and market class. Suppose within this cell there are K different possible cars to choose with known sales volumes $n_1, n_2, \ldots n_k$ (let $n = \sum_{i=1}^{K} n_i$). Suppose also the respective unknown costs are $c_1, c_2, \ldots c_k$.

We seek an estimate of the overall average cost

$$\bar{c} = \sum_i c_i \frac{n_i}{n} \qquad \text{based on one observation.}$$

Any decision rule may be described by a set $p_1, \ldots, p_k$ where p_i is the probability of selecting the ith possible car and then obtaining its cost c_i.

The risk associated with any rule, under squared error loss (obviously appropriate under variance considerations) is

$$\sum_i (c_i - \bar{c})^2 \, p_i$$

The natural inclination at this point is to attempt to minimize this risk over the p_i. The answer is set $p_i = 1$ at c_i closest to $\bar{c}$. But this is clearly worthless since the c_i are unknown. (If they were known, $\bar{c}$ would also be known and there would be no problem.)

Hence, the choice of the p_i's can only depend on the n_i. The natural approach suggests the unbiased estimator $p_i = \frac{n_i}{n}$ so that the expected value of the estimator is $\bar{c}$. The associated risk is

$$\sum_i (c_i - \bar{c})^2 \frac{n_i}{n}$$

We wish to examine which of these is the smaller. First we solve the problem if k=2 in which case $n_1/n > 1/2$.

Claim: $$(c_1 - \bar{c})^2 < (c_1 - \bar{c})^2 \frac{n_1}{n_1+n_2} + (c_2 - \bar{c})^2 \frac{n_2}{n_1+n_2}$$

Proof: Obvious: plug in $\bar{c} = c_1 \frac{n_1}{n_1+n_2} + c_2 \frac{n_2}{n_1+n_2}$ and verify.

More generally, if we write

$$\bar{c} = c_1 \frac{n_1}{n} + \frac{\sum_{i=2}^{k} n_i c_i}{n}$$

$$= c_1 \frac{n_1}{n} + c' \frac{n-n_1}{n}$$

where $c' = \sum_{i=2}^{k} \frac{n_i c_i}{n-n_i}$

In other words, $\bar{c}$ is the weighted average of c_1 with the weighted average of the remaining c_i's. Then,

$$\sum_{i=1}^{k} (c_i-\bar{c})^2 \frac{n_i}{n} = (c_1 - \bar{c})^2 \frac{n_1}{n} + \sum_{i=2}^{k} (c_i-c' + c'-\bar{c})^2 \frac{n_i}{n}$$

$$= (c_1 - c)^2 \frac{n_1}{n} + (c' - \bar{c})^2 \frac{(n-n_1)}{n} + \sum_{2}^{k} (c_i-c')^2 \frac{n_i}{n} \quad ,$$

compared with

$$(c_1 - \bar{c})^2 \quad .$$

But if $\frac{n_1}{n} > 1/2$ then $\bar{c}$ is closer to c_1 than to c'.

i.e., $(c_1 - \bar{c})^2 < (c' - \bar{c})^2$

or $(c_1 - \bar{c})^2 \frac{(n-n_1)}{n} < (c' - \bar{c})^2 \frac{(n-n_1)}{n}$

or $(c_1 - \bar{c})^2 < (c_1 - \bar{c})^2 \frac{n_1}{n} + (c' - \bar{c})^2 \frac{(n-n_1)}{n}$

Since the circled term is ≥ 0, selecting c_1 via n_1 clearly gives the smaller risk. If $\frac{n_1}{n} < \frac{1}{2}$, there is no "best" solution. The better choice can only be made knowing the c_i. If $\frac{n_1}{n}$ is close to $\frac{1}{2}$, the circled term should still be large enough to make selecting c_1 via n_1 the better choice.

On the other hand, if all the n_i are about the same, i.e.,

$$\frac{n_i}{n} \approx \frac{1}{k} \qquad \text{then}$$

$$\bar{c} \approx \frac{\Sigma c_i}{k} \quad \text{and} \quad \sum_i (c_i - \bar{c})^2 \frac{n_i}{n} \approx \sum_i (c_i - \bar{c})^2 \frac{1}{k}$$

i.e., the "average" $(c_i - \bar{c})^2$ is no better than any particular $(c_i - \bar{c})^2$. Hence, again selecting c_1 via n_1 should still be as effective as randomizing.

APPENDIX I

FLOWCHARTS OF SELECTED ANALYSES

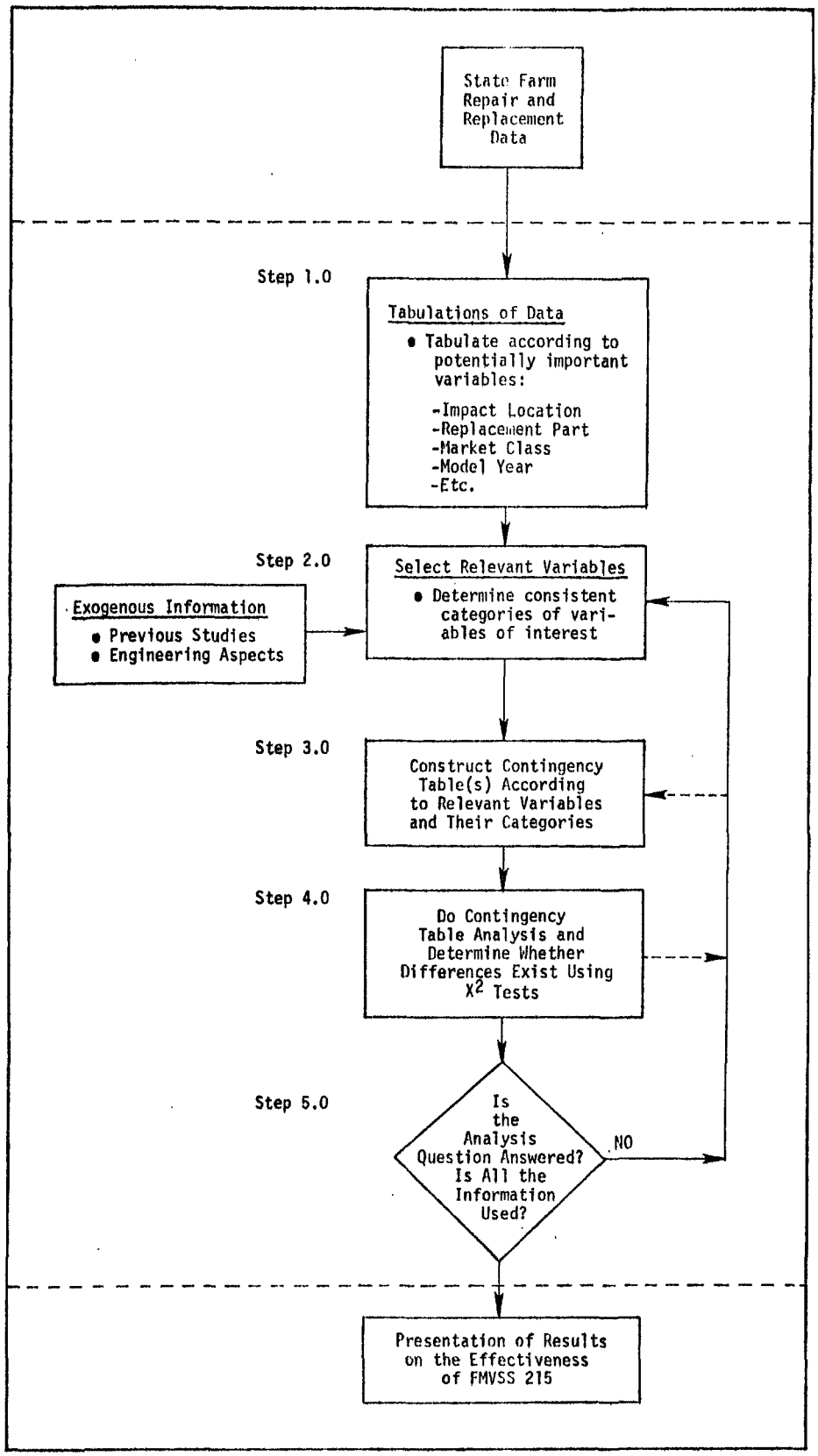

Figure I-1. Proposed Statistical Analysis Scheme for Evaluating FMVSS 215 (Exterior Protection).

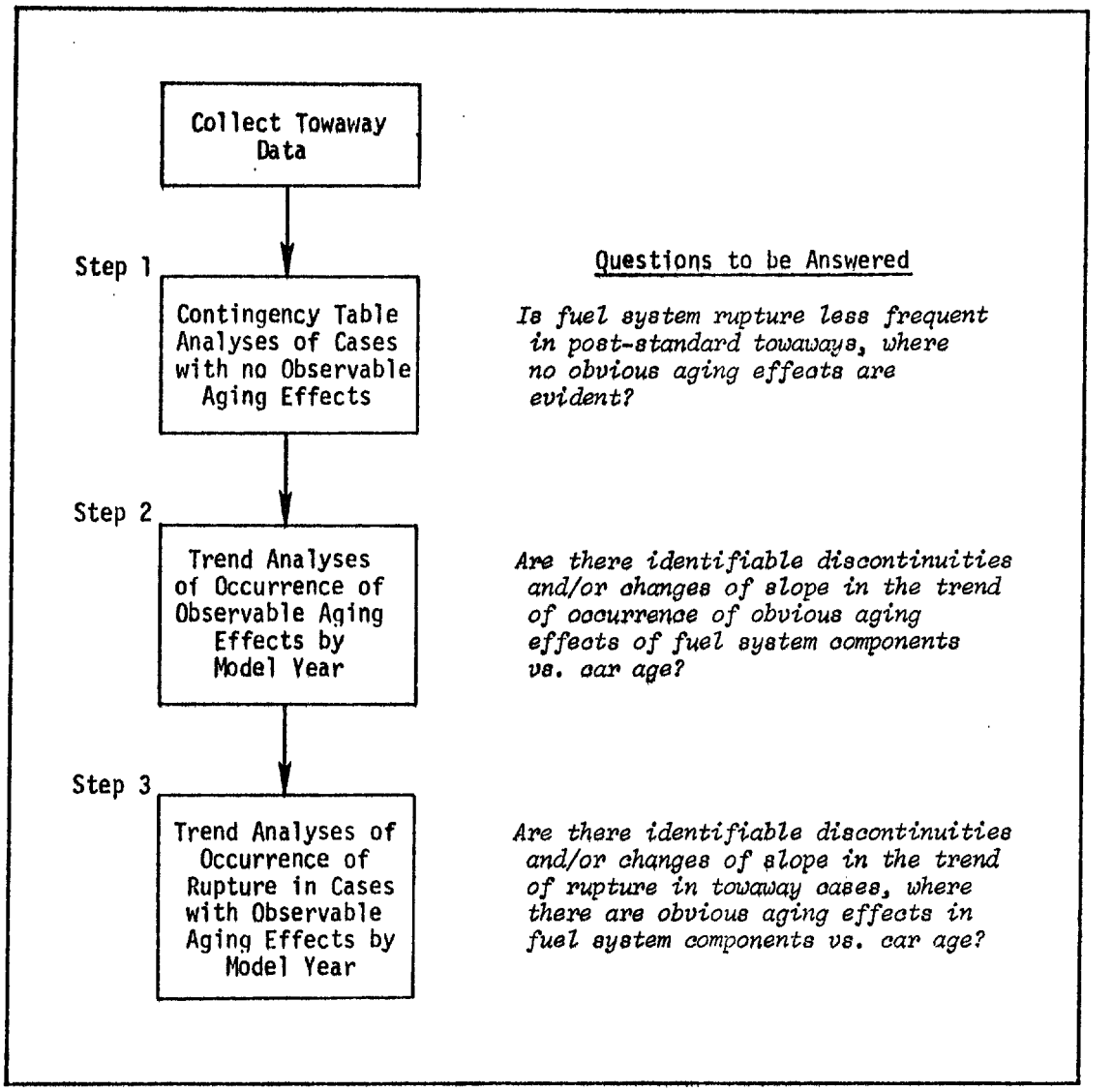

Figure I-2. Proposed analysis scheme for evaluating FMVSS 301 with fuel system rupture towaway data.

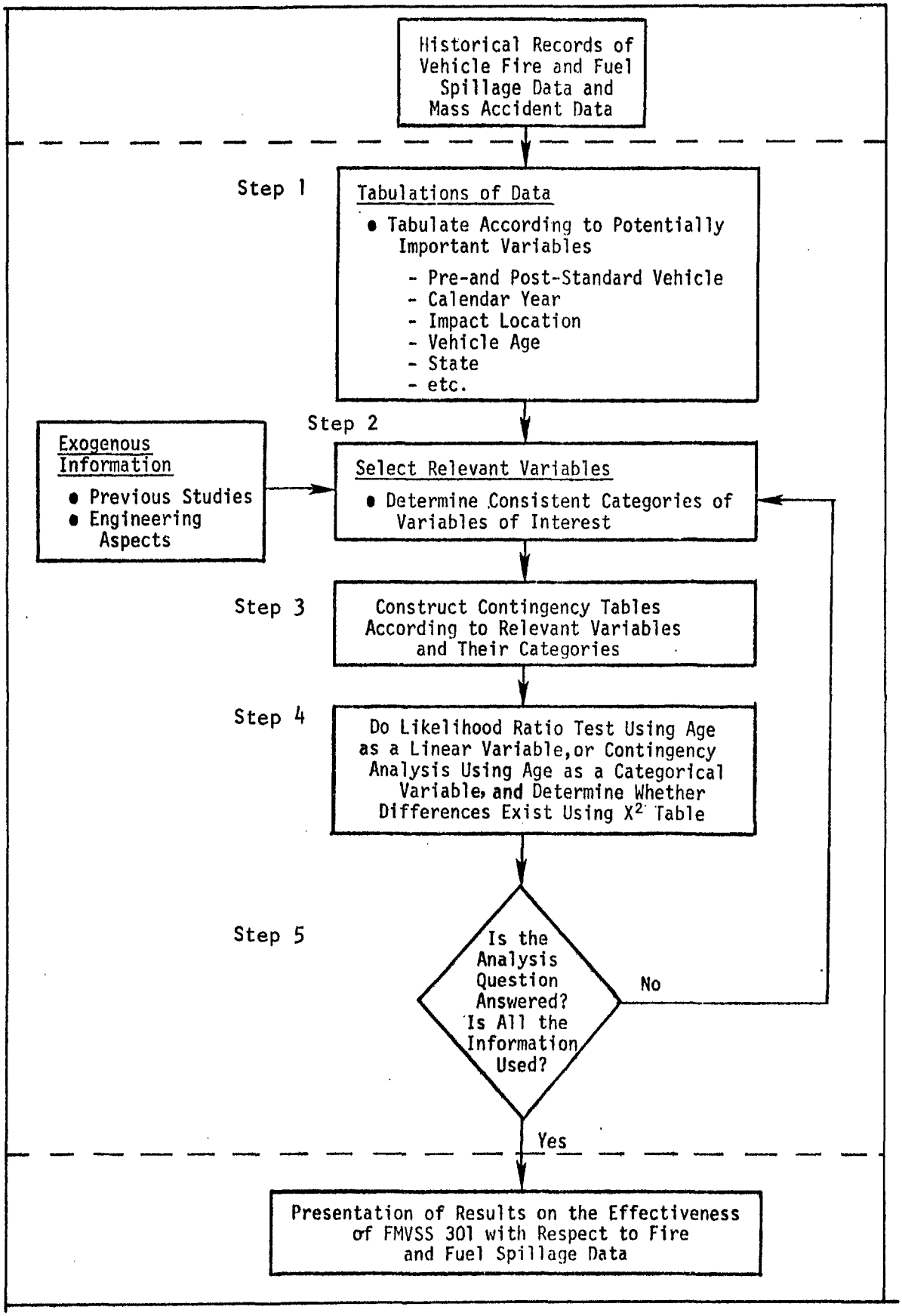

Figure I-3. Proposed statistical analysis scheme for evaluating FMVSS 301 with vehicle fire and fuel spillage data.

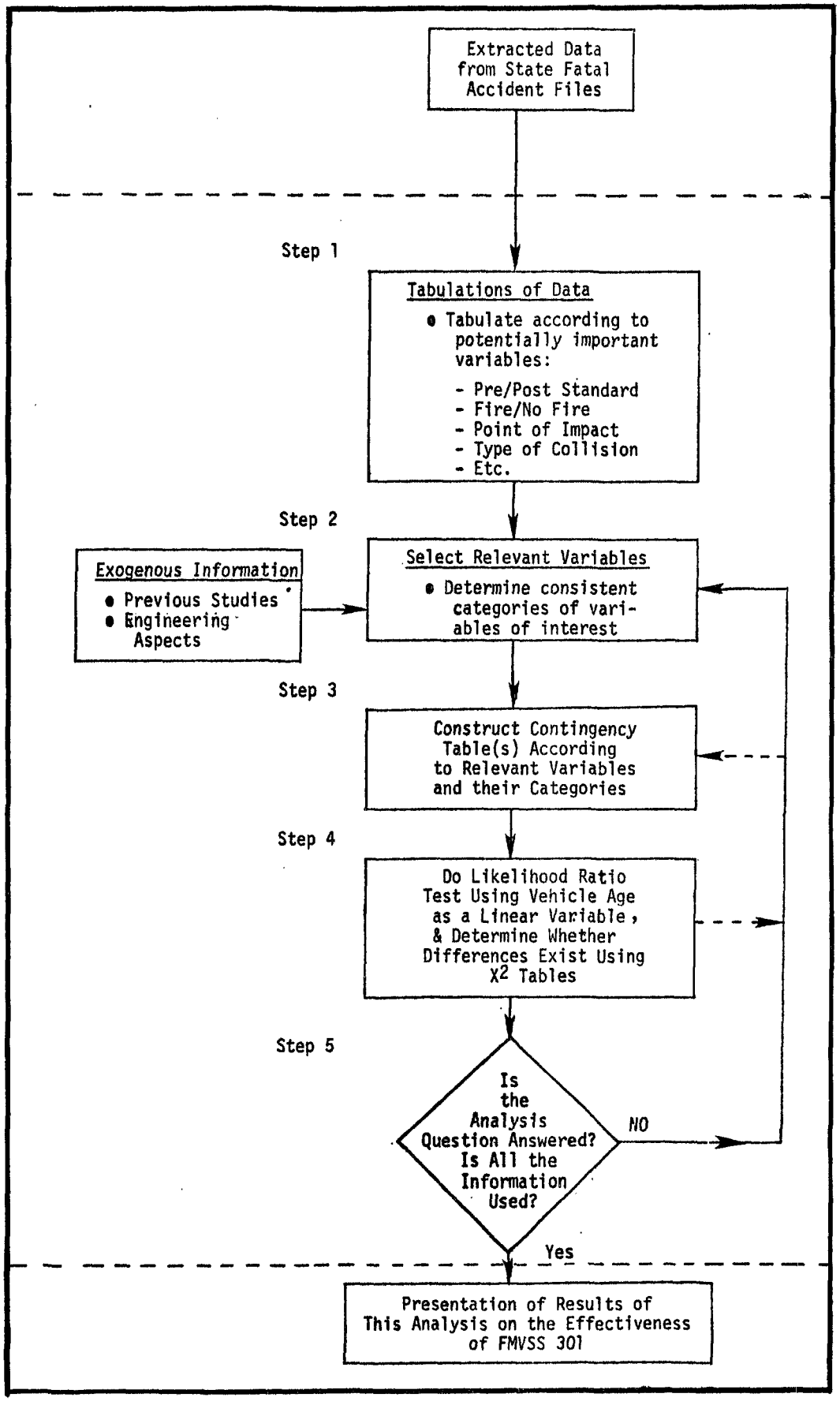

Figure I-4. Proposed Statistical Analysis Scheme for analyzing fire-related fatal automobile accidents.