Appendix C:
Fact Sheets

Appendix C: Fact Sheets

Saffir-Simpson Hurricane Intensity Scale	C-1
Earthquake Magnitude and Intensity	C-2
EMAC	C-3
USACE Support to ESF #9	C-4
Background: 249th Engineer Battalion (Prime Power)	C-5
Battallion Organization	C-6
Prime Power Support to Disaster Operations	C-7
Independent Assessment and Assistance Team (IAAT)	C-13
Presidential Disaster Declarations	C-14

Saffir-Simpson Hurricane Intensity Scale

The Saffir-Simpson Hurricane Scale rates hurricane intensity from 1-5. It provides the basis for estimates of potential flooding and property damage along the coast from hurricane landfall.

- **Category I Hurricane:** Winds: 74-95 mph (64-82 kt or 119-153 kph). Storm surge: Generally 4-5 feet above normal. No real damage to building structures. The damage is primarily to unanchored mobile homes, shrubbery, and trees with some damage to poorly constructed signs and some coastal road flooding and minor pier damage.
- **Category II Hurricane:** Winds: 96-110 mph (83-95 kt or 154-177 kph). Storm surge: Generally 6-8 feet above normal. There is some roofing material, door, and window damage of buildings with considerable damage to shrubbery and trees, with some trees blown down. There is also considerable damage to mobile homes, poorly constructed signs, and piers. Coastal and low-lying escape routes flood 2-4 hours before arrival of the hurricane center. Small craft in unprotected anchorages break moorings.
- **Category III Hurricane:** Winds: 111-130 mph (96-113 kt or 178-209 kph). Storm surge: Generally 9-12 feet above normal. There is some structural damage to small residences and utility buildings, with a minor amount of curtain wall failures. Damage to shrubbery and trees consists of foliage blown off trees and large trees blown down. Mobile homes and poorly constructed signs are destroyed. Low-lying escape routes are cut off by rising water 3-5 hours before the arrival of the hurricane center. Flooding near the coast destroys smaller structures with larger structures damaged by the battering of floating debris. Terrain continuously lower than five feet above mean sea level may be flooded inland eight miles (13 km) or more. Evacuation of low-lying residences with several blocks of the shoreline may be required.
- **Category IV Hurricane:** Winds: 131-155 mph (114-135 kt or 210-249 kph). Storm surge: Generally 13-18 feet above normal. There are more extensive curtain wall failures with some complete roof structure failures on small residences. Shrubs, trees, and all signs are blown down with complete destruction of mobile homes. Extensive damage to doors and windows. Low-lying escape routes may be cut off by rising water 3-5 hours before the arrival of the hurricane center. Major damage to lower floors of structures near the shore. Terrain lower than ten feet above sea level may be flooded, requiring massive evacuation of residential areas as far inland as six miles (10 km).
- **Category V Hurricane:** Winds: Greater than 155 mph (135 kt or 249 kph). Storm surge: Generally greater than 18 feet above normal. There is complete roof failure on many residences and industrial buildings. Some complete building failures, with small utility buildings blown over or away. All shrubs, trees, and signs blown down with complete destruction of mobile homes, as well as severe and extensive window and door damage. Low-lying escape routes are cut off by rising water 3-5 hours before arrival of the hurricane center. Major damage to lower floors of all structures located less than 15 feet above sea level and within 500 yards of the shoreline. Massive evacuation of residential areas on low ground within 5-10 miles (8-16 km) of the shoreline may be required.

Earthquake Magnitude and Intensity

Magnitude measures the energy released at the source of the earthquake and is determined from measurements on seismographs. Intensity measures the strength of shaking produced by the earthquake at a certain location and is determined by effects on people, human structures, and the natural environment.

Magnitude	Intensity	Description
1.0 - 3.0	**I**	Not felt except by very few under certain conditions.
3.0 - 3.9	**II-III**	II. Felt only by a few persons at rest, especially on upper floors of buildings. III. Felt by persons indoors, especially on upper floors of buildings. Many people do not recognize it as an earthquake. Standing automobiles rocked slightly. Vibrations similar to a truck passing. Duration estimated.
4.0 - 4.9	**IV-V**	IV. Felt indoors by many, outdoors by few. At night, some awakened. Dishes, windows, doors disturbed. Walls made cracking sound. Sensation was like heavy truck striking building. Standing motor cars rocked noticeably. V. Felt by nearly everyone; many awakened. Some dishes and windows broken. Unstable objects overturned. Pendulum clocks may have stopped.
5.0 - 5.9	**VI-VII**	VI. Felt by all, many frightened. Some heavy furniture moved; some fallen plaster. Damage slight. VII. Damage negligible in buildings of good design and construction; slight to moderate in well-built ordinary structures; considerable damage in poorly built or badly designed structures; some chimneys broken.
6.0 - 6.9	**VIII-IX**	VIII. Damage slight in specially designed structures; considerable damage in substantial buildings with partial collapse. Damage great in poorly built structures. Fall of chimneys, factory stacks, columns, monuments, and walls. Heavy furniture overturned. IX. Damage considerable in specially designed structures; well-designed frame structures thrown out of plumb. Damage great in substantial buildings, with partial collapse. Buildings shifted off foundations.
7.0 and higher	**VIII or higher**	X. Some well-built wooden structures destroyed; most masonry and frame structures destroyed with foundations. Rails bent. XI. Few, if any (masonry) structures remain standing. Bridges destroyed. Rails bent greatly. XII. Damage total. Lines of sight and level distorted. Objects thrown into the air.

Emergency Management Assistance Compact (EMAC)

Public Law 104-321 is the basis for the Emergency Management Assistance Compact (EMAC), and all 50 states, the District of Columbia, Puerto Rico, and the Virgin Islands have enacted legislation to become members of EMAC. EMAC is the first national disaster-relief compact to be ratified by Congress since the Civil Defense and Disaster Compact of 1950. EMAC is a mutual aid agreement and partnership between states which exists because all states share in the constant threat of disaster, from hurricanes to earthquakes, and from wildfires to toxic waste spills.

EMAC offers the following benefits:

- Provides assistance more readily than other resources.
- Allows for a quick response to disasters using the unique human resources and expertise possessed by member states.
- Offers state-to-state assistance during governor-declared states of emergencies. EMAC offers a responsive and straightforward system for states to send personnel and equipment to help disaster relief efforts in other states. When resources are overwhelmed, EMAC helps to fill in the shortfalls.
- Establishes a firm legal foundation. Once the conditions for providing assistance to a requesting state have been set, the terms constitute a legally binding contractual agreement that makes affected states responsible for reimbursement. Responding states can rest assured that sending aid will not be a financial or legal burden and personnel sent are protected under workers compensation and liability provisions. The EMAC legislation solves the problems of liability and responsibilities of cost and allows for credentials to be honored across state lines.
- Provides fast and flexible assistance. EMAC allows states to ask for whatever assistance they need for any type of emergency, from earthquakes to acts of terrorism. EMAC's simple procedures help states dispense with bureaucratic wrangling.
- Moves resources other compacts can't, such as medical resources.

USACE Support to ESF #9
Urban Search and Rescue Missions

Under the National Response Plan, the USACE supports the ESF #9 Urban Search and Rescue (US&R) mission. This includes developing, training, and equipping USACE personnel to operate as support to the FEMA US&R Task Forces.

- **Technical Assistance Structural Engineers:** Technical Assistance (ESF #3) Structural Engineers (TASE) support FEMA and other Agency efforts requiring structural engineering expertise. The individuals designated as TASE support are comprised of selected USACE personnel with a wide variety of structural engineering expertise who are tasked to address structural engineering design and construction issues. TASE may be tasked to evaluate, design, construct, or repair buildings, bridges, critical facilities, etc., by combining local responders, military, USACE cadres personnel, and a FEMA Task Force member, if possible.

- **Structural Safety Assessment Planning and Response Team:** The Corps has four Structural Safety Assessment Planning and Response Teams (SSA PRTs). The SSA PRT consists of:
  - A mission management cell
    - Action Officer
    - Mission Manager
    - Mission Specialist
  - A “just-in-time” training cell
    - Applied Technology Council-20 Training Officer
  - The inspectors/inspection management cell
    - Supervisory Inspection Team Leader (1)
    - Inspection Team Leaders (4)
    - Safety and Occupational Health Professional (1)
- The primary purpose of the SSA PRT is to provide habitability inspections as required to support response and recovery efforts for building safety evaluations. These evaluations determine whether damaged (or potentially damaged) buildings are safe for use or if entry should be restricted or prohibited. The buildings are inspected for damage and assigned a safety rating or posting category in a uniform manner. Inspections are coordinated with the appropriate local officials.

Background: 249th Engineer Battalion (Prime Power)

Prime Power Mission: On order, deploy worldwide to provide prime electrical power and electrical systems expertise in support of military operations and the National Response Plan.

Organization: The 249th Engineer Battalion (Prime Power) is a USACE asset headquartered at Ft. Belvoir, Virginia. The Prime Power battalion generates and distributes medium-voltage electrical power in support of warfighting, contingency, and disaster relief operations. The battalion also maintains the Army's power generation war reserve and provides advice and technical assistance in all aspects of electrical power.

Prime Power Companies: The Battalion consists of three Prime Power Companies and a Headquarters and Headquarters Company (HHC). Each Prime Power Company has a company headquarters, four active component Prime Power Detachments, one reserve component Prime Power Detachment and one reserve component Power Line Detachment. Each Prime Power Detachment (both active and reserve component), led by a Warrant Officer (210A) and a Master Sergeant (21X50), is comprised of two Prime Power Sections with 7 NCOs (21P) each. The reserve component Power Line Detachments, led by a Warrant Officer (210A) and a Master Sergeant (21X50), are comprised of three Power Line Sections with five Soldiers (21Q) each.

HHC, 249th En Bn (Prime Power) is headquartered at Fort Belvoir, Virginia. It is comprised of the battalion staff and a Heavy Maintenance Section, led by a Warrant Officer (210A) and a Master Sergeant (21X50) and comprised of 27 NCOs (21P).

A Company, 249th En Bn (Prime Power) is headquartered at Fort Lewis, Washington, along with two active component Prime Power Detachments. Its other two active component Prime Power Detachments are located at Camp Humphreys, South Korea, and Schofield Barracks, Hawaii. Its reserve component Prime Power Detachment is located in Tacoma, Washington, and its reserve component Power Line Detachment is located in Attleboro, Massachusetts.

B Company, 249th En Bn (Prime Power) is headquartered at Fort Bragg, North Carolina along with three active component Prime Power Detachments. Its other active component Prime Power Detachment is located at Thompkins Barracks, Germany. Its reserve component Prime Power Detachment is located in Kittanning, Pennsylvania, and its reserve component Power Line Detachment is located in Attleboro, Massachusetts.

Battalion Organization

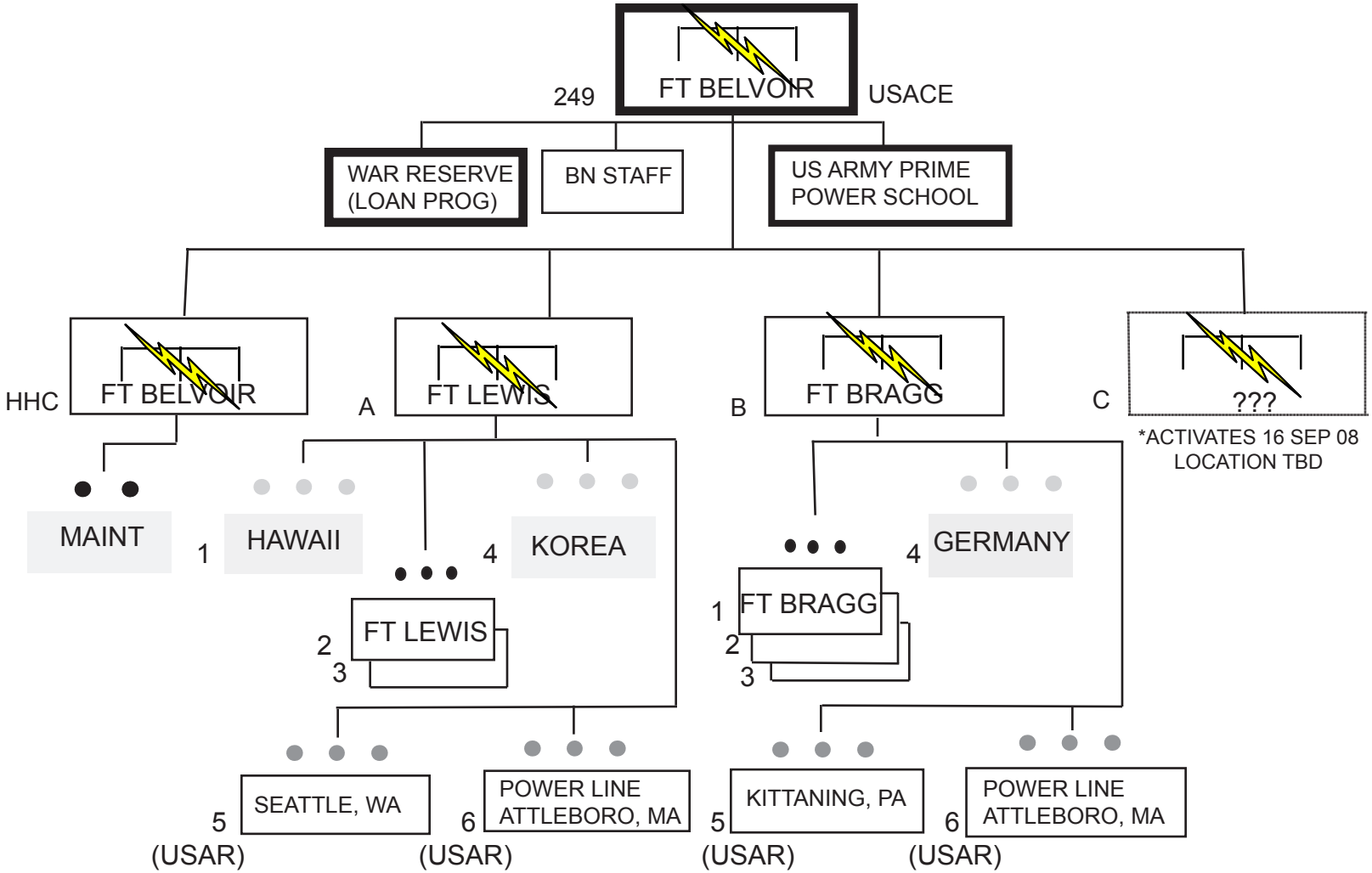

Prime Power Support to Disaster Operations

- The 249th En Bn (Prime Power) deploys as part of USACE's support to FEMA during natural disasters. During a major event (CAT IV or V Hurricane) the 249th would typically deploy a Liaison Officer (LNO) or LNO team (Warrant Officer and/or NCO) to work with USACE's ESF #3 Action Officer as part of the FEMA Emergency Response Team(s) (ERTs). In the event of multiple ERT activations, the 249th would support with multiple LNOs or LNO teams.

- The 249th En Bn (Prime Power) will normally deploy a Command and Control (C2) element to the Recovery Field Office (RFO) as part of the Power Planning Response Team (PRT). The PRTs are OPCON to the lead Division. The RFO serves as the command and control center for disaster relief operations for the Division. The C2 element serving the RFO does so as part of the PRT. In the event of multiple RFOs, the 249th would support with multiple C2 elements. In the majority of disaster response scenarios, this C2 element would also serve as the liaison to the ESF #3 Action Officer.

- Depending on the nature of the disaster, the 249th En Bn (Prime Power) would typically deploy Pre-Installation Inspection Teams (PIITs) to conduct pre-installation inspections and other missions as required. The Power PRT Mission Manager, having operational control of Prime Power assets, determines the nature of these additional missions and prioritizes them as needed.

- Caveats:
  - All support to FEMA disaster relief operations is dependent on the availability of the 249th assets after fulfilling warfighting requirements.

  - 249th En Bn (Prime Power) fully supports participation in disaster relief operations, but as a strategic level warfighting asset, Prime Power should be used only when contract support is not available or as an augmentation to other, non-military assets. Based on this, Prime Power will carry the initial burden of pre-installation inspections and will be relieved in place as contract support becomes available.

Disaster Relief ESF #3 Support

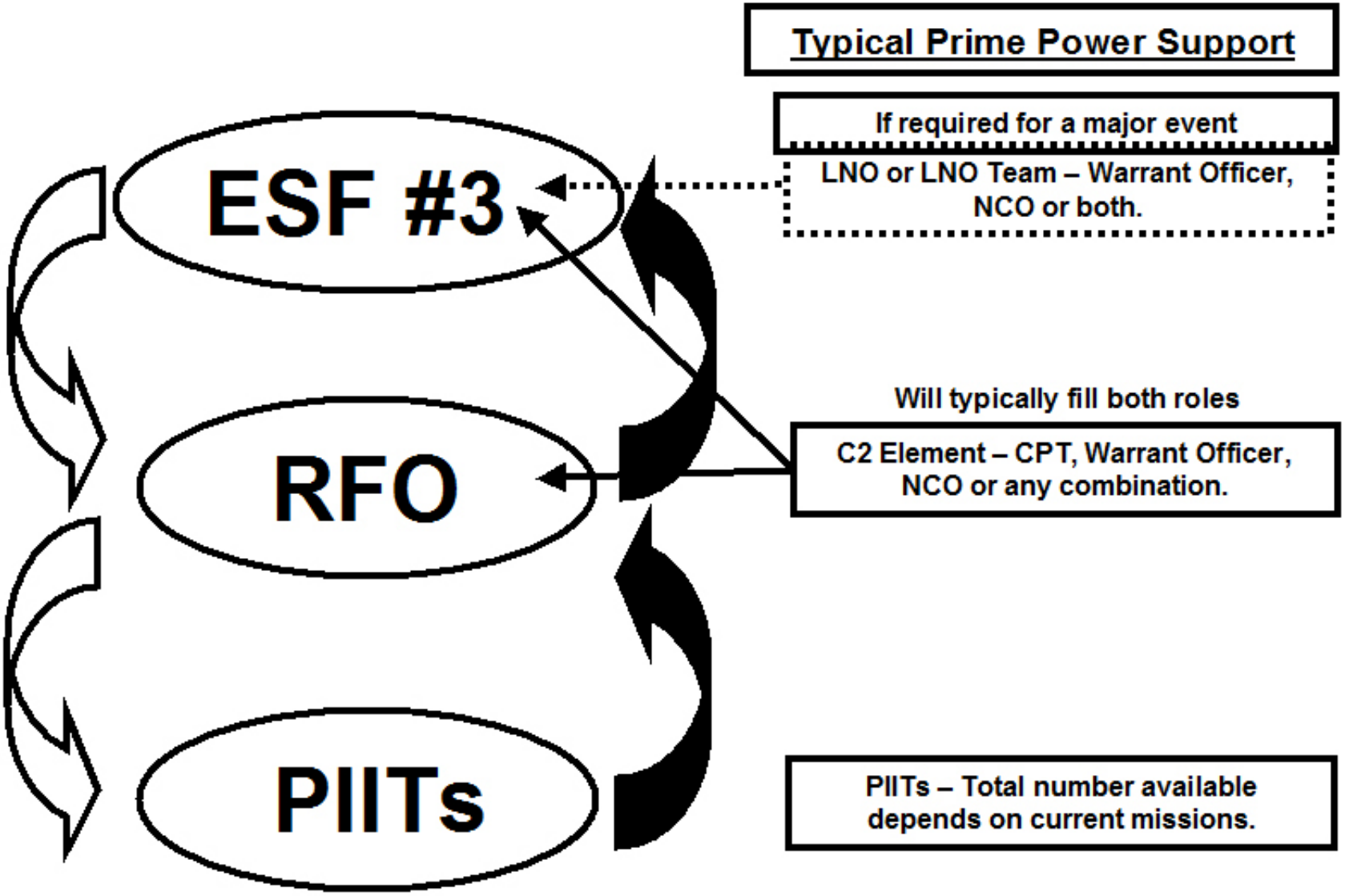

Prime Power Support to Disaster Operations
"Concept of Operations"

Concept: The 249th En Bn (Prime Power) is prepared to support USACE response at three distinct levels: with an LNO or LNO team as part of the ESF #3 team, Command and Control (C2) element as part of the PRT, and Pre-Installation Inspection Teams (PIITs).

- **LNO as Part of ESF #3:** USACE deploys an ESF #3 team to the ERT-A before the disaster strikes (if possible). During a major event (e.g., CAT IV or V hurricane), the 249th is prepared to deploy an LNO or LNO Team (Warrant Officer and/or NCO) as requested by the USACE Operations Center (UOC). This LNO or LNO Team is responsible for assisting in scope of work for the mission and determining the level of 249th involvement required, assisting the ESF #3 Action Officer by coordinating and advising the ESF #3 Action Officer on Prime Power operations.

- **C2 Element as Part of the PRT:** The affected USACE division activates the RFO to support the FEMA Joint Field Office. USACE PRTs activate and report to the RFO. The 249th is prepared to deploy a C2 element (either a CPT, Warrant Officer, NCO, or a mix) to support the PRT. This C2 node is responsible for advising the Power PRT Mission Manager on Prime Power operations, command and control of Prime Power PIITs, and issuing Mission Assignments from the Mission Manager to the assessment team. Part of this C2 element would typically be located at the generator staging yard. In the majority of disaster response scenarios, this C2 element would also serve as the liaison to the ESF #3 Action Officer.

- **Pre-Installation Inspection Teams (PIITs):** These teams are activated as requested by the UOC. The teams work directly for the C2 element as directed by the Power PRT. In most cases, a few teams will be activated and will deploy prior to the event with additional teams deploying as required after landfall. The teams consist of two NCOs (21P). Most of the tasks the PIITs will be pre-installation inspections, but other tasks could include generator installations, generator de-installations, quality assurance to contract services, generator repair and maintenance, generator preparation for shipment, or any other task assigned to the 249th by the Mission Manager.

Prime Power Detachment Personnel and Equipment

Personnel

1 - CW3 (210A)
1 - MSG (21X)
2 - SFC (21P)*
6 - SSG (21P)*
6 - SGT (21P)*

*ASI distribution:
4 ea S2 - Mechanic
8 ea S3 - Electrician
2 ea E5 - Instrumentation Technician

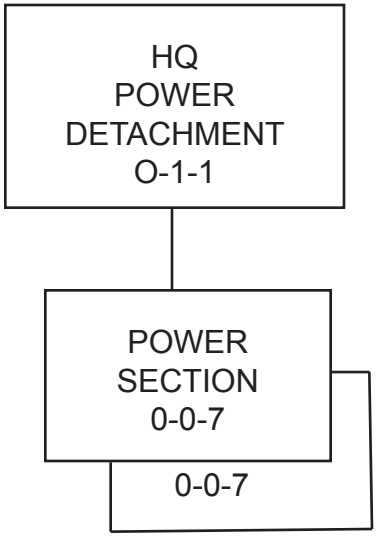

Equipment

4 - MEP-PU-810B (840 kW)
4 - Operator Remote Term.
11 - (SDC) 150 KVA
24 - (PDP) 25 kW
2 - (PDP) 35 kW
2 - (RALS)
1 - M998
1 - 2-1/2 T LMTV with trlr
1 - Contact Truck
1 - 10K fork lift

Capabilities

Support to the Warfighter

- Provide electrical power technical assistance
- Assess and repair existing power infrastructure
- Provide power contract oversight as COTR
- Conduct power system QA/QC
- Design, install, and operate interim power with organic or contracted equipment
- Maintain/repair distribution systems and substations

Support to the NRP

- Provide up to seven 2-Soldier Pre-Installation Generator Inspection teams IAW ESF #3 SOP
- Provide up to seven 2-Soldier generator installation teams
- Operate and maintain power generation at four critical commercial facilities (size-dependent)
- Perform QA/QC on FEMA and contract generators

Prime Power Detachment Personnel and Equipment

Personnel

1 - CW3 (210A)
1 - SFC (21Q)
3 - SSG (21Q)
3 - SGT (21Q)
3 - SPC (21Q)
6 - PFC (21Q)

*ASI distribution:
4 ea S2 - Mechanic
8 ea S3 - Electrician
2 ea E5 - Instrumentation Technician

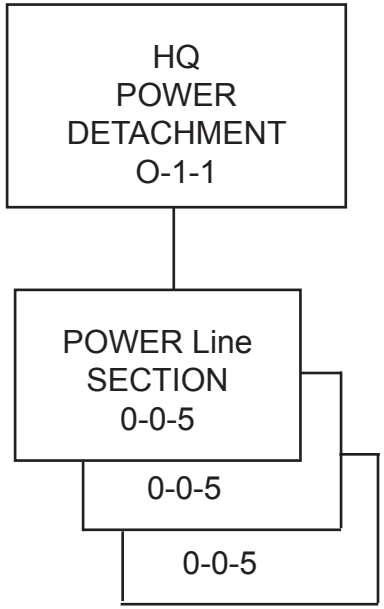

Equipment

3 - Pole Truck
1 - M998
3 - Shop Equipment

Capabilities

- Assess and repair commercial power distribution systems
- Install, maintain, and repair aerial and underground distribution systems
- Assess and repair critical infrastructure

249th EB Mission

On order, deploy worldwide to provide prime electrical power and electrical systems expertise in support of military operations and the National Response Plan.

METL

- Command and Control
- Deploy
- Provide Prime Electrical Power
- Provide Electrical Power Systems Expertise
- Support Prime Power Operations

Independent Assistance and Assessment Team (IAAT)

Purpose: Provide the Director of Civil Works an independent assessment of ongoing USACE emergency operations, identify successes/lessons learned from the perspectives of engaged commands, customers, and partners, and to apply those lessons learned to future responses.

Objectives:

- Assess the USACE Concept of Operations and Mission Execution Procedures
- Evaluate Progress and Success of New Initiatives
- Identify Command-wide Issues/Lessons Learned
- Analyze Results to Identify Priorities for Corrective Action

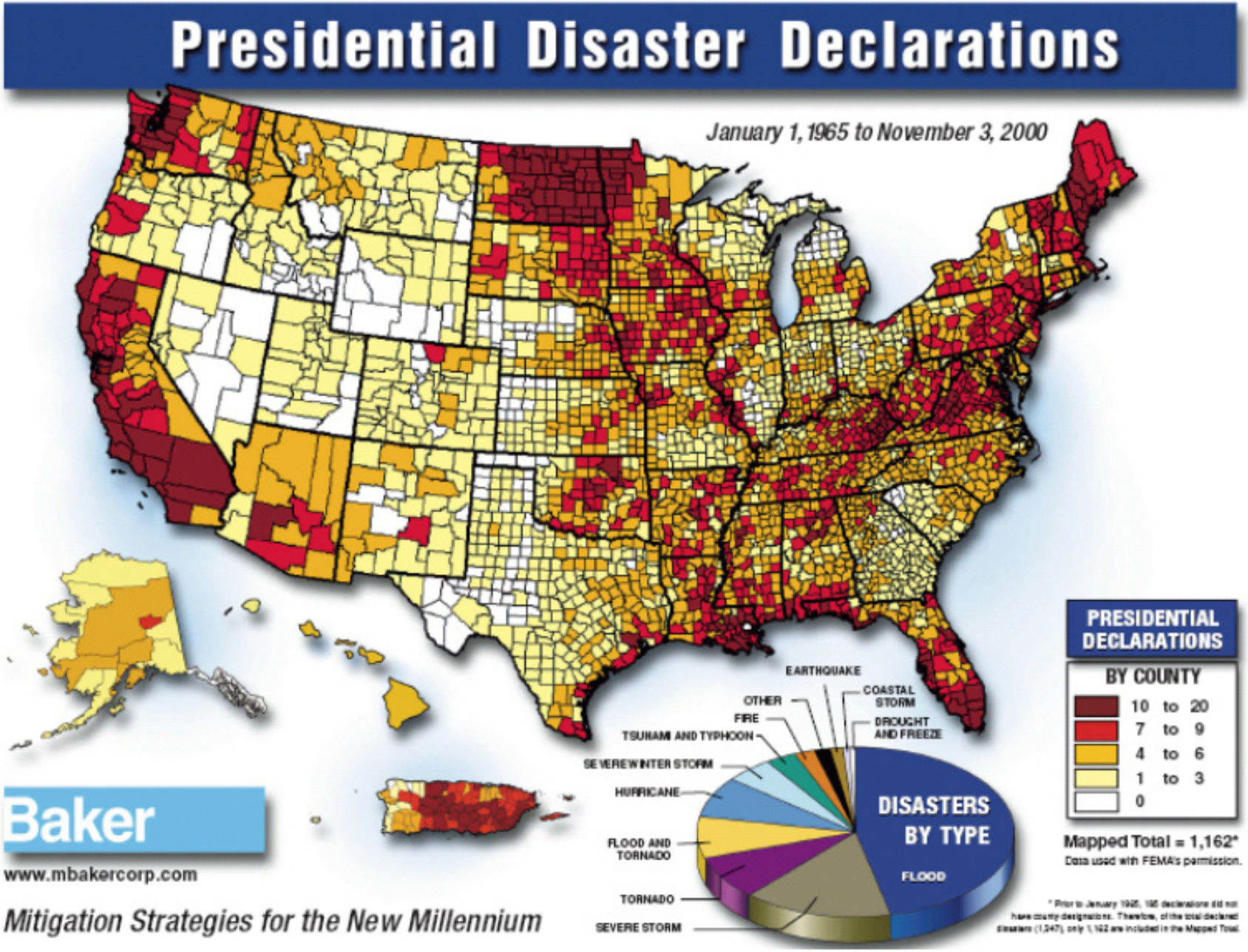
Presidential Disaster Declarations
January 1, 1965 to November 3, 2000
PRESIDENTIAL DECLARATIONS
BY COUNTY
10 to 20
7 to 9
4 to 6
1 to 3
0
Mapped Total = 1,162*
Data used with FEMA's permission.
DISASTERS BY TYPE
FLOOD
EARTHQUAKE
COASTAL STORM
DROUGHT AND FREEZE
OTHER
FIRE
TSUNAMI AND TYPHOON
SEVERE WINTER STORM
HURRICANE
FLOOD AND TORNADO
TORNADO
SEVERE STORM
Baker
www.mbakercorp.com
Mitigation Strategies for the New Millennium