Section 6:
Recovery Field Office (RFO)

Section 6: Recovery Field Office (RFO)

Mission Tasking to RFO	6-1
RFO Concept	6-2
ICS RFO Organization	6-3
RFO Responsibilities	6-4

Mission Tasking to RFO

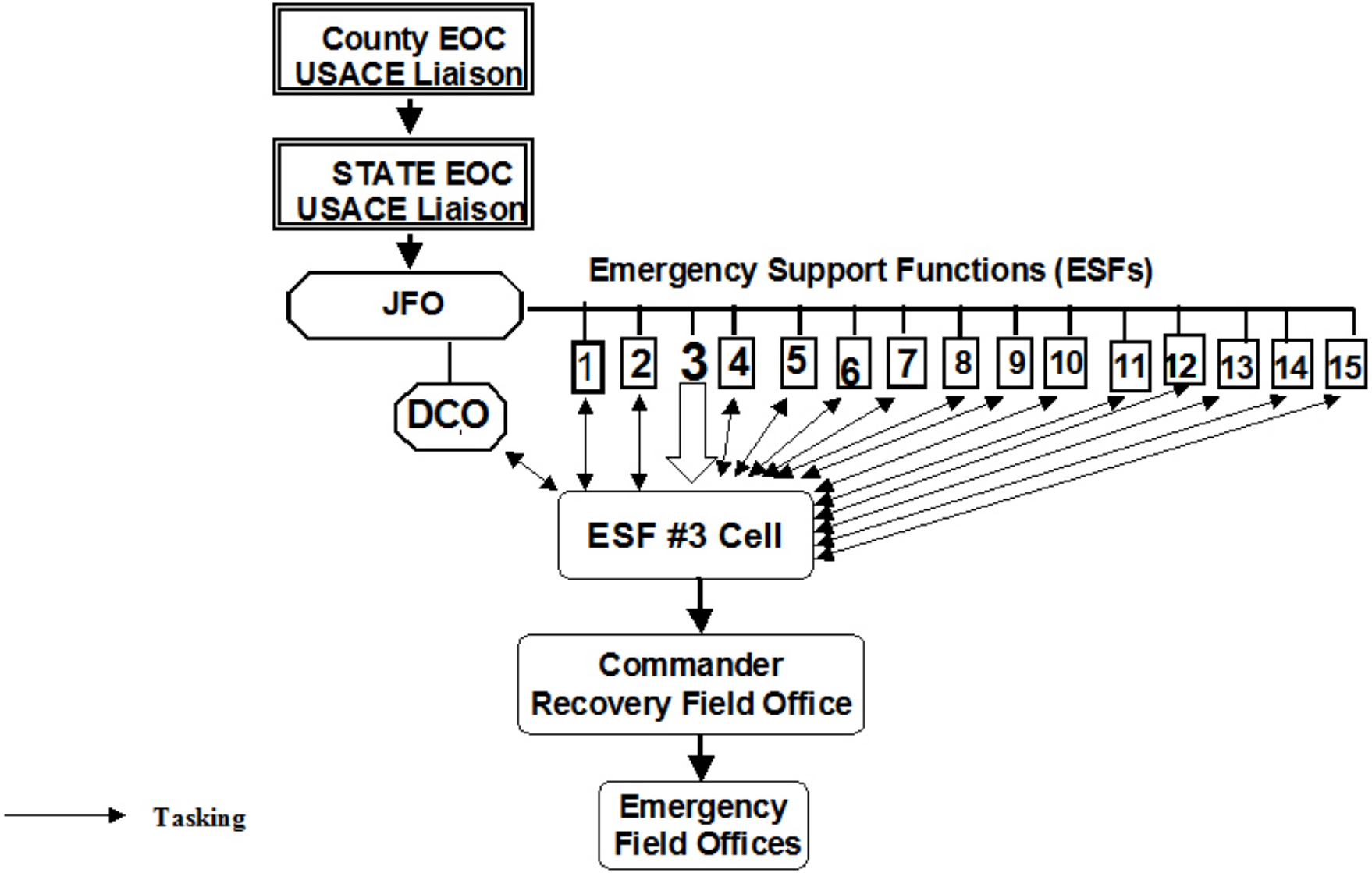

RFO Concept

The purpose of the RFO is the management and execution of FEMA recovery missions assigned to USACE under the Stafford Act. The person designated by the impacted MSC Commander as the RFO Commander commands the RFO and is responsible for the management of all RFO operations. The RFO management structure should be provided from the supported district, if possible (to ensure continuity and unity within the impacted area). An RFO is established when missions are significant and of long duration and require continuous coordination with the FCO and State. *FEMA must issue a Mission Assignment to establish the facility and equipment costs (not including personnel costs).* Personnel working on specific missions charge to their respective mission. Non-mission specific personnel will charge to the Regional Activation Mission Assignment.

District Responsibility and Functions:

- Initially, the District EOC is the focal point of all disaster-related information flow and command and control.
- District elements do their normal jobs, but in an expedited manner.
- Initially manages total response effort:
  - Stafford Act (NRF)
  - PL 84-99 Missions (FC&CE)
  - USACE Facilities
  - Military Support
  - Normal Operations
- Provides key management and resource support to the RFO, when established.

RFO Organization:

- Responsibility of RFO Commander
- Supported district provides essential elements of command and control organization
- Established early and staffed to meet the requirements of disaster
- Represents most district elements (mirror district organization)
- Focus is on all FEMA disaster missions and their execution (separates the FEMA missions from other district operations)

ICS RFO Organization

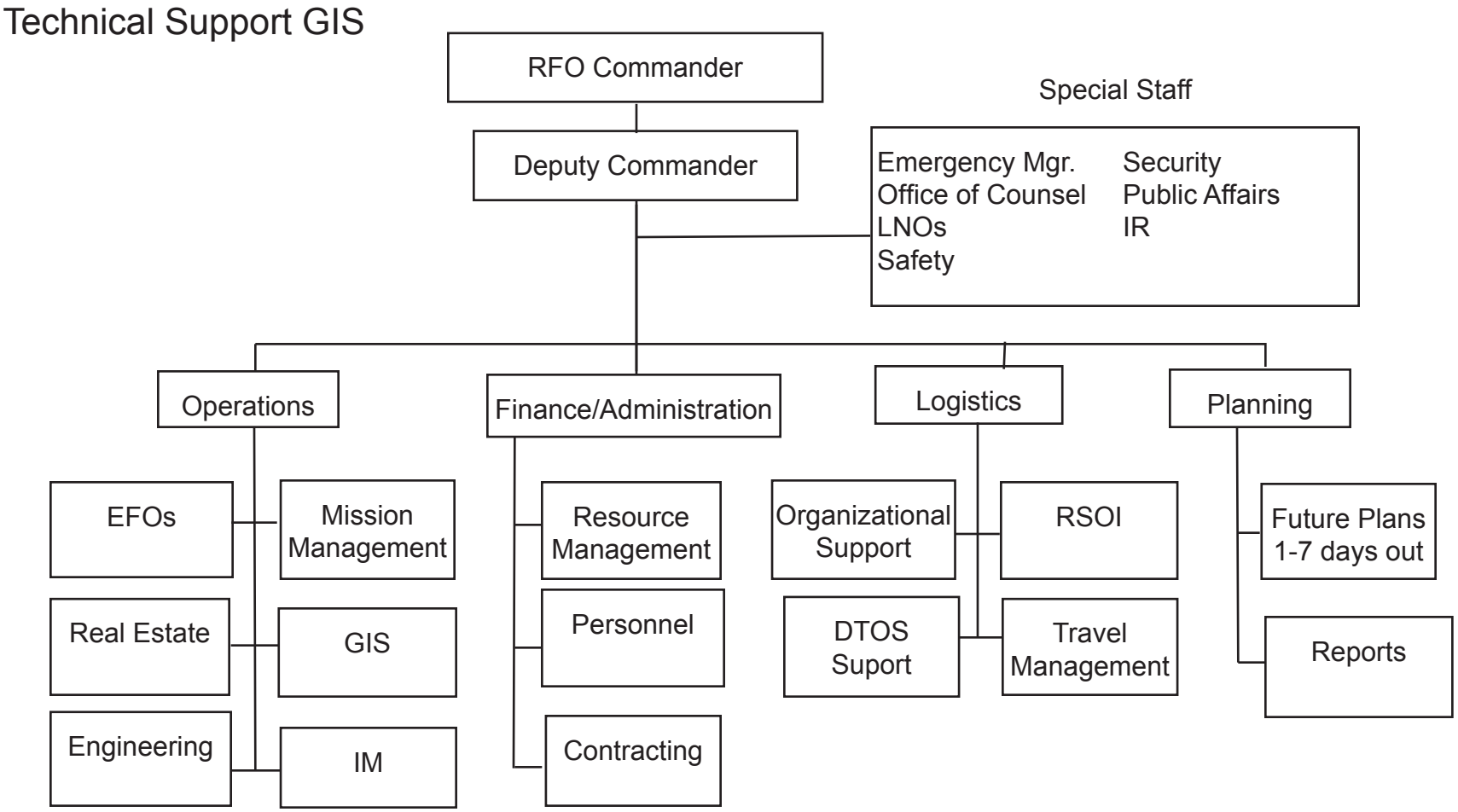

RFO Responsibilities

Scoping (Coordination with ESF #3)
- Geographical
- Political
- Length/Rate of Execution
- Execution Factors (limited resources, etc.)
- Manpower Requirements

Reporting
- Mission Funding
- Progress of Missions - EEIs
- Contract Information and Summary

Financial Management
- Establish Accounts
- Separate Account for this Mission
- Manage Funds
- Labor Associated with Mission
- General Overhead Costs
- Contract Cost

Coordination
- ESF #3
- Emergency Field Office(s) (EFO)
- State/Local Officials
- Staging Operations
- Media (public affairs)

Emergency Contracting
- RFO Advertises, Awards, and Manages
- RFO Supports Staging Operations and EFO Requirements for Supplies and Equipment
- Power and Commodtiy Teams Function as QA/QC at Staging Operations

Logistics Management
- Staging Operations Established and Typically Managed by FEMA as Part of JFO Operations
- USACE Staging Operations Managed by PRT's Under Command and Control of RFO

Emergency Field Office (EFO)
- Established by a District EOC or RFO, as required
- Execution Arm of a District EOC or RFO for Recovery Missions
- COR Responsibility for Mission Execution

Mission Closeout: Physical:
- Develop when Mission Begins
- Federal Assistance No Longer Required
- Requires FEMA, State & Local Coordination

Mission Closeout: Fiscal:
- Long-term/Final Step in Mission