MHI
Copy 3

FM 12-2-1 (TEST)

DEPARTMENT OF THE ARMY FIELD MANUAL

copy 1

ADJUTANT GENERAL
FUNCTIONAL SUPPORT TO FASCOM

LIBRARY
MFSS

HEADQUARTERS, DEPARTMENT OF THE ARMY
APRIL 1967

TAGO 6978A

FIELD MANUAL
No. 12-2-1 (TEST)

HEADQUARTERS
DEPARTMENT OF THE ARMY
WASHINGTON, D.C., *17 April 1967*

ADJUTANT GENERAL FUNCTIONAL SUPPORT TO FIELD ARMY SUPPORT COMMAND

		Paragraph	Page
CHAPTER 1.	INTRODUCTION	1–4	8
2.	TASTA-70 FUNCTIONAL SYSTEM OPERATIONS		
Section I.	Personnel records keeping	5–9	5
II.	Personnel management and actions	10–12	17
III.	Automated system for assignment of replacements	13–18	19
IV.	Casualty reporting	19–22	24
V.	Administrative services	23–34	29
VI.	Postal	35–37	39
VII.	Special services	38–40	44
CHAPTER 3.	ADJUTANT GENERAL'S OFFICE AND DIRECT SUPPORT UNITS		
Section I.	Adjutant General's Office	41–43	47
II.	Personnel and administrative battalion	44–48	48
III.	Headquarters and Headquarters Detachment, Personnel and Administration Battalion	49–53	50
IV.	Personnel Service Company	54–58	51
V.	Replacement Regulating Detachment	59–63	53
VI.	Administrative Service Detachment	64–68	55
VII.	Army Post Office	69–73	57
VIII.	Special Services Detachment	74–78	58
IX.	Army band	79–83	61
APPENDIX A.	REFERENCES	------	62
B.	INTERIM IMPLEMENTATION OF TASTA-70 ADP	------	64

CHAPTER 1

INTRODUCTION

1. Purpose and Scope

This manual provides interim guidance to commanders, staff officers, and other personnel concerned with adjutant general functional support and units under the TASTA–70 concept of organization and operation. This information can be used by major commands to facilitate reorganization under the TASTA–70 concept. Firm information on organizational structure and composition of units will be contained in TOEs when published. Although the basic TASTA–70 Study has been approved by Department of the Army, detailed doctrine contained in this test field manual is subject to further Department of the Army review and final approval.

2. Comments

Users of this test manual are encouraged to submit comments to improve the manual. Comments should be keyed to the specific page, paragraph, and line of the text in which the change is recommended. Reasons should be provided for each comment to insure understanding and complete evaluation. Comments should be forwarded direct to the Commanding Officer, U.S. Army Combat Developments Command Personnel and Administrative Services Agency, Fort Benjamin Harrison, Ind. 46249.

3. General

The Administrative Support, Theater Army (TASTA–70) general doctrine is outlined in FM 54–8 (TEST). Salient features of TASTA that pertain to this manual are a reduction of staff elements within headquarters units by eliminating special staff sections and integration of appropriate specialist personnel and functions into the general staff; increased use of automatic data processing equipment; and combat service support units which, beginning at the company level, can be tailored to provide combat service support to varying sized force structures. Selected organizational and operational principles used as the basis for TASTA system design to insure a maximum degree of responsiveness, effectiveness, and economy in providing combat service support are listed below:

a. The potential capabilities of automatic data processing equipment have been recognized; the combat service support system is based to a high degree on the employment of automatic data processing equipment (modern, high capacity, digital computers and high speed terminal input/output devices linked together by a high capacity and reliable communications system) to increase the responsiveness to user requirements and management needs and to speed up data processing.

b. Management by exception is the policy and is possible through the extensive use of summary reports and printouts of the automatic data processing equipment located at various control centers. These summary reports and printouts indicate trends or situations which require direct intervention only to assure efficient, timely, and economical combat service support operations.

c. Routine management is conducted by functional control centers attached to major headquarters which operate under the control of appropriate general staff sections of the headquarters.

d. The special staff sections of all major headquarters have been integrated into general staff activities.

e. Personnel record keeping is minimized at unit level and will generally be centralized at personnel service centers (a functional control

center) at Support Brigade, Area Support Command, and Personnel Command levels.

f. Units are organized to function, to the maximum degree, in either the combat zone or the communications zone.

4. Adjutant General Support

The operational concepts and organizations described in this manual concentrate on the major personnel and administrative functions to include personnel records keeping, management, actions, replacements, and casualty reporting; administrative services; and morale services—postal, special services, and band. These are designed to be an evolutionary progression from the ROAD and COSTAR doctrine. Primary emphasis is placed on field army operations—direct support; however, the functional systems described in chapter 2, extending from company size units to the theater army level, will afford a better understanding of the total organizational and operational relationships.

a. General. The major combat commander's personnel and administrative support activities are assigned to the appropriate support command/brigade. Although the combat commander retains overall responsibilities and prerogatives in this area, he is not required to accomplish nor is he concerned with routine day-to-day operations. He retains only those personnel on his staff necessary to provide command policy and planning and internal operations of the headquarters.

b. Direct Support. The direct support personnel and administrative services are provided in the army/corps areas by the Personnel and Administration Battalion (and assigned or attached units) assigned to the Army/Corps Support Brigade. These units are described in chapter 3. The Headquarters, Personnel and Administration Battalion, forms the nucleus of the Personnel Service Center—a functional control center. The Personnel Service Center employs the Army/Corps Support Brigade computer facility on a time sharing processing basis. Operational control of the Personnel Service Center is exercised by the respective brigade assistant chief of staff, personnel. FM 54–6–1 (TEST), Area Support Command, TASCOM includes the direct personnel and administrative support in the communications zone.

c. General Support. The general support personnel and administrative support to the direct support activities in the combat and communications zone are provided by the Personnel Command, Theater Army Support Command. These activities include personnel, administration, finance, prisoner of war/civilian internee, graves registration, and chaplain organizations which are described in FM 29–6–1 (TEST), Personnel Command, TASCOM. The Personnel and Administration Center (PAC), is the general support personnel and administrative functional control center which performs those routine functions, less broad planning and policy, that were formerly accomplished by the theater army headquarters personnel and administrative special staff sections (except provost marshal). The PAC consists of the Personnel and Administration Agency (TOE 12–112) and a supporting automatic data processing unit (TOE 29–540) assigned to the Personnel Command and operates under the operational control of the Assistant Chief of Staff, Personnel, Personnel Command (TOE 12–111).

d. Adjutant General's Office. The Adjutant General's Office of each major command such as the Corps Brigade or FASCOM headquarters operates under the general staff supervision of the Assistant Chief of Staff, Personnel, and provides internal management and services for the headquarters. These services include a distribution center, limited reproduction facilities, central classified document control and repository, library services for headquarters correspondence and publications, and coordination with the servicing army post office and signal communications facility for receipt and dispatch of official mail and messages. Coordination is also maintained with the supporting administrative service detachment for volume reproduction requirements and central records library service.

CHAPTER 2

TASTA–70 FUNCTIONAL SYSTEM OPERATIONS

Section I. PERSONNEL RECORDS KEEPING

5. General

This section describes the organizational and operational concepts, operating procedures and data flow, command and management requirements, quantitative workload, and effect of the proposed concept for personnel records keeping on the current system.

6. Organizational Concepts

a. The proposed organizational structure for personnel records keeping is designed to conform with the total TASTA–70 organizational and operational concept of support commands, as indicated in (1) through (5) below.

(1) *Divisional units.* The Division Support Command maintains the command record tape file and provides the personnel services and administration required for individuals and units assigned or attached to the division.

(2) *Corps units.* The Corps Support Brigade maintains the command record tape file and provides the personnel services and administration required by corps units.

(3) *Army units.* The Army Support Brigade maintains the command record tape file and provides the personnel services and administration required for field army units.

(4) *COMMZ units.* Area Support Command maintains the command record tape file and provides the personnel services and administration required for those units located within the assigned area of responsibility.

(5) *Theater army.* The PAC maintains the field administrative personnel record tape file and provides personnel services and theater level administration required by all units within the theater army.

b. Records processing branches are component elements of the Personnel Services Division of the Administration Company for divisions and the Personnel Records Division, Personnel Service Company of Corps/Army Support Brigades and the Area Support Command.

c. Each records processing branch/division consists of a headquarters section, processing unit(s), and a service unit.

(1) The headquarters section is primarily responsible for the overall administration and supervision of the operating units of the branch.

(2) Processing unit(s) are designed primarily to provide routine personnel information and records maintenance services direct to supported units and, as required, to combat service support commands and staff elements. These units can, under unusual circumstances, send out teams for attachment to subordinate elements, as required, to reduce the adverse effects of time and distance inherent in area support operations or in highly mobile and fluctuating combat situations. Under the normal operating environment this capability is used to facilitate subdivision of workload by functionalized grouping according to types of actions processed, or according to a proportionate grouping of supported units without regard to type of action. The number of processing units authorized for each records processing

branch is determined by the population and administrative activities of the force to be supported. The functions performed by processing units are essentially identical between branches with only minor deviations according to volume of work and the echelon of command.

(3) Service units are designed primarily to provide personnel information and records maintenance services to the combat service support headquarters command and staff involving special projects, surveys, or reports pertaining to large segments/lists of the supported force without regard to unit identity. The staffing of service units is determined by the population and administrative activities of the force to be supported in the same manner as processing units.

7. Operational Concepts

a. Responsibility. The current method of relating levels of responsibility for personnel records keeping to equivalent or corresponding echelons of command is inadequate to accurately describe the functional relationship to be maintained between the proposed ADP system and the organizational environment in which it must operate. Although in the broad sense the terms "level" and "echelon" may be synonymous, the term "level" is preferred to describe the degree of responsibility involved in order to avoid the connotation of "command" associated with the term "echelon." This fine line of distinction is drawn primarily to emphasize the functional role of personnel records keeping as a tool of the commander at each echelon and not as an end in itself. Therefore, the proposed concept is designed not as a substitute for command, but as a means by which the commanders may be relieved of a cumbersome clerical burden without an appreciable loss of control regarding the maintenance of, or reference to, data information required in the execution of command.

b. Levels of Maintenance. Three levels of records maintenance responsibility have been identified within the theater of operations, each with a successively more complex role than its counterpart at the lower level of operations. These levels are compatible with, but do not correspond to, the conventional echelons of command within the theater army. Each level is discussed to illustrate how it contributes to the overall flow of data from the small unit level to the theater army data processing center, or apex, within the theater of operations.

(1) *First level.* This level represents all units or individuals which serve as originators of data to be used in one form or other as input to the second level. It is normally considered to be at the small unit or company level. However, such data may also originate as a byproduct of parallel vertical systems at medical, military police, and graves registration activities.

(*a*) The introduction of direct access input/output digital devices at the first level or at intermediate echelons, such as battalions, between the primary source level and the servicing data processing activity will reduce the flow of hard copy source data in direct proportion to the use of such devices for personnel records updating operations. Data transmitted by such devices would be indexed according to the specific action/information required. Individual identification and other variable data applicable to such transactions would be provided in an established standard format at the source.

(*b*) The existence of such equipment does not of itself preclude hard copy documentation of source data at this level. Such factors as volume of traffic and operational priority restrictions will initially tend to reduce direct access to data processing elements to selected activities. Therefore, other potential users not so equipped must resort to a more conventional method of source data reporting by oral means or hard copy reporting.

(2) *Second level.* This level is defined as the point at which the "command"

tapes are to be established and maintained.

(*a*) This is the lowest organizational support element to which automatic data processing equipment is allocated and authorized for administrative purposes, e.g., Division Support Commands, Corps Support Brigades, Army Support Brigades, and the Area Support Command in the communications zone. Although a certain amount of hard copy will continue to be received as input at this level, such data is considered as transitory for ultimate retention, as required, at the third or fourth levels according to prescribed standards and criteria. (Such practices are considered interim measures designed to facilitate phased implementation pending ultimate introduction of a complete network of digital input/output devices as a means for transmission of all administrative activities at the first, or source, level.)

(*b*) Digital transmission of data transactions emanating from remote input/output devices is recorded off-line at the computer site for immediate or subsequent processing according to predetermined schedules and priorities. Output data and reports resulting from computer processing are normally transmitted to the requestor in the same mode in which received.

(*c*) Manually prepared hard copy documents requesting information or change in individual status affecting personnel records are received in the Records Processing Branch of the servicing personnel activity. The data reported in this manner is translated into appropriate transaction codes and converted to punched paper tape for transmission to the computer site. Output data and reports are delivered to the records processing branch for final disposition.

(3) *Third level.* This level is defined as the point at which the field administration personnel record, including magnetic tape/disc file and hard copy, is maintained within the theater of operations. Operations are essentially the same as prescribed for the second level consistent with the increased scope and volume. This constitutes the apex of personnel records keeping activities within the army in the field.

(*a*) The total records keeping activity at this level is a function of the Theater Army Personnel and Administrative Center, as the repository and administrative agency for individual and unit records and reports within the theater army.

(*b*) Department of the Army and Theater Army policies determine the extent to which hard copy documentation is retained in the theater. Certain documents, such as legal documents and other papers, continue to be retained in their original form. However, the majority of these documents and reports are reproduced and miniaturized for retention in the theater on microfilm, video tape, or similar more advanced processes of reproduction and storage. The original forms of such documents and reports will be permanently retired to a record depository in CONUS.

(*c*) The magnetic tape/disc files are maintained on the basis of changes reported from second level data processing elements by digital data transmission or transaction tape shipments. The magnetic tape files will be used primarily for the maintenance of the individual personnel record and statistical data relative thereto. This administrative tape file is more detailed and complete than the command tape maintained at the second level. The disc, or random access, file is used primarily in the maintenance of a perpetual inventory of unit status and organi-

zation. Minimum individual identity and status information applicable to position assignments is shown on these records.

c. *Command/Management Requirements.*

(1) The personnel records keeping system is designed to provide the user with the personnel data and information necessary to accomplish his mission. Certain data and information is specified to be maintained by higher command echelons, such as Department of the Army and Theater Army; however, local commanders may specify data and information to be maintained to support their requirements. Users of the systems outside of the personnel support activities are provided personnel records, data, and information on a continuing basis for current use and planning purposes.

(2) Decision making exercised in connection with personnel operations and management is accomplished by the commander or appropriate staff officer. Automatic data processing techniques are geared to gather, store, compare, and analyze data, and to develop a valid data base to identify alternate courses of action for use by the decision maker. Input data is reduced to the simplest terms and forms consistent with accuracy and ease of assimilation into the data base. Standard transaction language is used for the internal operation of the system to select and execute the desired operation relative to records data, not only to facilitate records keeping but also to permit interaction with other parallel systems. Output data and reports are in simplified language readily understood by all levels of action personnel.

(3) The major influencing factor in determining type(s) of data to be processed is the level of responsibility to which it must respond. The current method of operation uses centralized control and operation of a vertical personnel system at Headquarters, Department of the Army. Ultimately in a peacetime or highly sophisticated combat environment, this would greatly reduce the amount of detailed information to be maintained at the lower levels; however, the stringent data controls required in such systems are difficult if not impossible to retain during an accelerated transition or escalation from peace to war systems. Therefore, the proposed system represents a scheme of centralized control with decentralized operation, with the degree of centralized control being adjusted to the rate of escalation from peace to war systems or conditions. Since this transition should be accomplished with the minimum of disturbance to the basic system, a theater (third) level personnel records activity is established as the pivotal point between the two extremes of complete centralization versus complete decentralization. Therefore, the Theater Army, PAC, initially functions as a monitor for coordination during implementation; in a support role in relieving subordinate levels of reports production to Department of the Army; and as a fail-safe backup of systems at the next lower (second) level.

(4) The major problem in the establishment of criteria for selection of data to be retained at the theater army (third) level and at the command (second) level is deeply rooted in the system of recording and reporting data since the Army was first organized. The onus of responsibility for correspondence or reports preparation has invariably rested on the subordinate commands responsible for the maintenance of such records. Even though commanders today are not the actual custodians of such records, little has been accomplished to relieve the commander of elaborate, detailed reports preparation. Under the proposed concept, relief from this burden is the objective. The commander is

recognized as the primary source of data concerning the individual in those matters which are within the province of the local commander to influence or determine. However, as personnel actions are reported daily to the servicing data processing activity, the commander is relieved of the responsibility for further custody and maintenance of such data. Those elements of data required for local command and management action are maintained on the command tape. These data, plus other personnel data of a historical nature not required for personnel management at the local level but vital to the accurate maintenance of a complete service record of the individual, are forwarded to the PAC for update and retention as part of the administrative field personnel record file. Based on a scheme of predetermined priorities, the local commander of the individual concerned has access to both records.

d. Channels. Three functional channels of routing data have been identified (fig. 1).

(1) *Administration.* Personnel records keeping in its traditionally passive role should not be confused with the active process of personnel administration, which is properly a function of command under the guidance and supervision of the appropriate staff officer. This includes military courts, board, investigations, and recommendation for personnel actions beyond the scope of the local commander to resolve or predict. However, each action in some degree requires selected personnel data which is extracted by programed computer processes and returned to the normal command channels for decision. Those administrative actions for which criteria are identified and established by delegated authority are resolved within these parameters by computer processes. For example, recommendations for school attendance are submitted by unit commanders as simple transaction codes, discussed in *e* below, identifying the individual, the course, and period(s) of attendance. The individual's record is analyzed against established criteria by computer process to determine eligibility. The eligibles are then applied against command quotas or allocations and promulgating orders published. A printout of ineligibles is also published with descriptive deficiencies in qualifications noted. An alternate of this routine operates in reverse, with the major command initially screening the file by the same computer processes to identify eligibles to aid in allocation of quotas to subordinate commanders. A listing of eligibles and quotas would then be forwarded to the appropriate unit commander for final selection. In either instance the servicing data processing activity serves as a management tool to relieve commanders at all echelons of routine clerical and administrative details without loss in the exercise of prerogatives.

(2) *Status.* Status information is defined in this study as that data relating solely to the individual or his record. The scope of such data is best illustrated by the items of information to be maintained in the administrative field personnel record at PAC.

(*a*) By virtue of the proximity of the individual to the commander, the majority of individual status reports originate at the small unit level and flow directly to the servicing data processing activity for update of the command tape and relay to the PAC for maintenance of the administrative field personnel records, and ultimately the master record at Headquarters, Department of the Army.

(*b*) Status information emanating from medical, military police, and graves registration activities is transmitted direct to the PAC. These channels are designed to provide correlation of conflicting data re-

garding status and to localize interface between parallel vertical systems to the greatest advantage.

(3) *Strength.* Statistical reporting of the quantitative effects of status changes is a primary function of the data processing activities at the second and third levels of responsibility for personnel records keeping. This is accomplished at Division Support Command, Corps and Army Support Brigades, and Area Support Command.

(*a*) Statistical data is accumulated as a byproduct of the daily command tape update cycle processing. Therefore, data relative to certain categories of personnel or units are immediately available on demand for local command or management requirements.

(*b*) Controlled recurring reports within the field army or COMMZ may be generated as the result of specialized processing, as required, and transmitted through command channels to field army or COMMZ as appropriate for tactical or logistical support requirements.

(*c*) The PAC accumulates or otherwise computes statistical data required by Headquarters, Department of the Army systems on a theater army-wide basis from verified status and strength data obtained in processing the field administrative personnel file at that level.

(*d*) A statistical recapitulation is automatically provided to each unit supported by the various servicing data processing activities at the second level of responsibility. These data are distributed as Part II to the unit manning report for the information and guidance of unit commanders.

e. Transaction Codes.

(1) The effectiveness of the proposed concept in reducing manpower and administrative routine depends upon the accuracy and simplicity with which input data may be entered into the system. This requires new techniques for expressing requirements readily assimilated by the system with a minimum of conversion or manual intervention. This is accomplished by a program file catalog of transaction codes related to specific automatic data processing routines designed to perform the routine repetitive clerical operations of research, solution comparison, and acceptance of certain records data as prescribed in operating policy directives and procedures.

(2) The transaction code program file consists of a catalog of numeric designators categorized by type of action or function. These designators are keyed to computer programs designed to accomplish automatically all requirements of Department of the Army and command policies and procedures.

(3) Each transaction code prescribes fixed or variable data essential to the execution of the process. Fixed data are mandatory and include such elements as the transaction code number, identity of the record or file to be processed, and other data peculiar to the type of action. For example, a transaction to record promotions or appointments must identify the new grade and effective date of promotion and date of rank if different from the effective date. Optional data may include changes of MOS, new position identity, or other factors. Alternate fixed data may also be applied in selected instances, such as identification of name or service numbers in lieu of standard identification to obtain locator service.

(4) Transaction codes are also provided for reports generation by the use of pseudoinstructions and statistical tables related to stored data. Unit identity codes are required to select the appropriate set of statistical data to be manipulated. A variable field of statistical parameters is required to

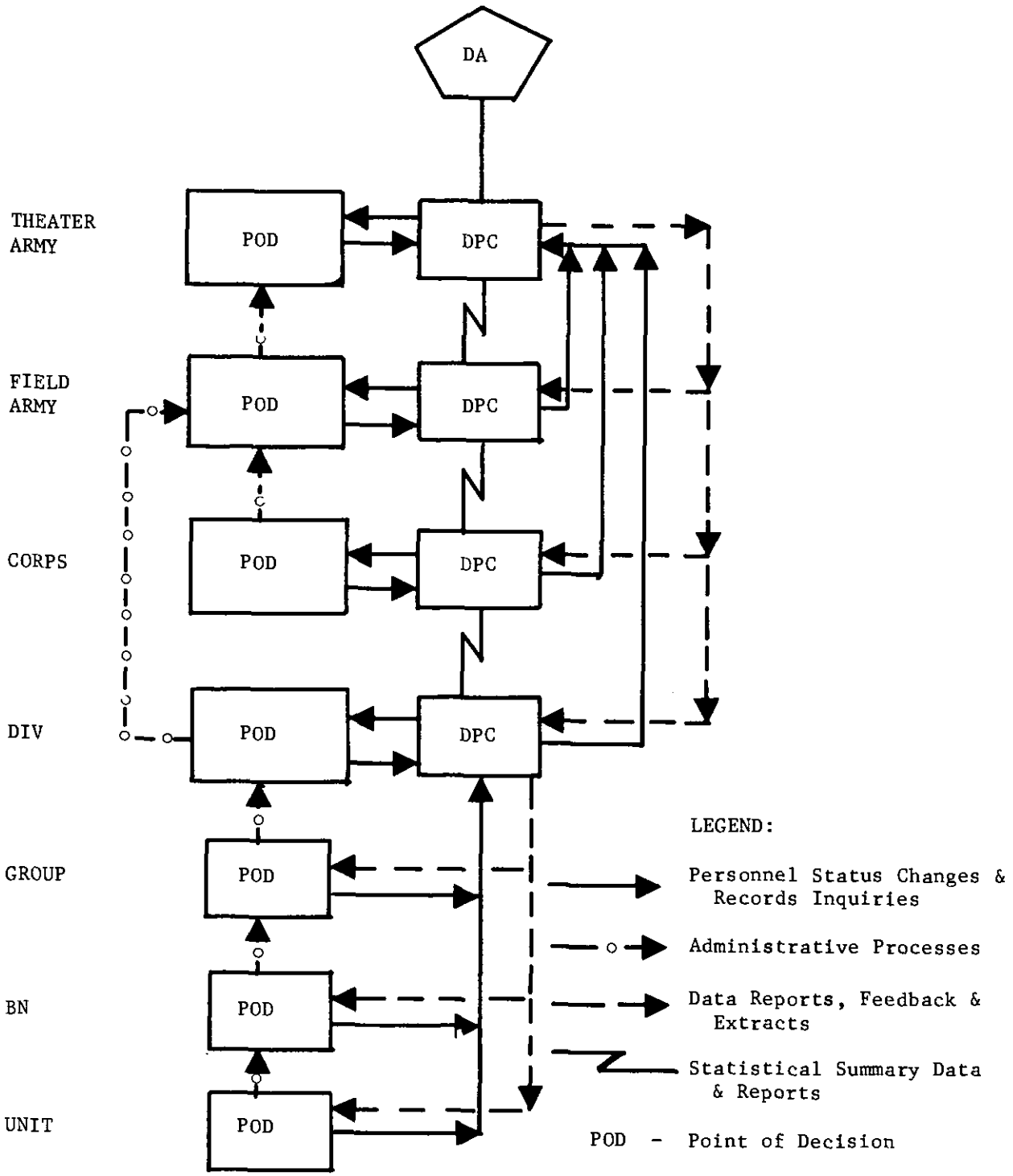

Figure 1. Personnel records keeping data flow.

accommodate the normal scope of statistical usage. For illustrative purposes only, assuming "A" is total casualties, "B" is MIA, "C" is KIA, a simple arithmetic computation to determine the percentage of total casualties that were killed in action could be expressed as "C, A, DIVIDE, WRITE RESULT." Although this is a simplified example, it is used to demonstrate the techniques to be applied in addressing computer systems by predetermined transaction codes to facilitate communication in terms readily understandable by personnel responsible for their application. Statistical computations frequently required as a matter of daily routine would normally be programed for computer processing and assigned an appropriate transaction code for immediate execution and processing on demand.

(5) Optional policies of the appropriate commands are included as addendum to computer programs and have corresponding transaction codes; however, the basic codes and programs are considered regulatory in nature and are centrally controlled at Headquarters, Department of the Army.

Processing Priorities.

(1) Computer executive routines are designed to control processing according to a predetermined schedule of priorities for access to the system. This is determined by transaction codes applied to input data and source of inquiry.

(2) Those transactions affecting unit strength and effectiveness are produced on a 6-hour cycle. Those of an administrative nature not affecting strength are processed twice a day at 12-hour intervals. All transactions regardless of type and origin are processed on a schedule of not less than 12 hours.

(3) A predetermined priority of command override of the normal processing schedule is established at each data processing activity for key commanders and staff elements within the servicing responsibility of the activity. The order of precedence is arranged in ascending numerical sequence from the highest to lowest command element being serviced within transaction code. This establishes the type of action as paramount within the command echelon to achieve proper balance and operating efficiency in response to total requirements of the system.

g. Computer Processing.

(1) The establishment and maintenance of personnel record tape files and the preparation of controlled recurring reports is accomplished by standard computer programs centrally developed and distributed at Headquarters, Department of the Army level. These computer programs relate to applicable regulations so as to reduce distribution of hard copy directives within the army in the field. They are constructed to permit the exercise of authority delegated to major command; therefore, logical exit and reentry points in standard programs are identified for initiation of subsidiary programs, as required, at each level.

(2) Programing personnel at each level of data processing authority are responsible for the development of computer programs to accomplish local requirements for data and internal reports. However, programs designed to add elements of data to the command tape for local use and reference are submitted to the PAC for coordination and approval prior to implementation. Additional elements to the command tape approved for this purpose are deleted upon transfer of records to other data processing activities upon reassignment of the individual(s) concerned. Deletion or modification of standard elements of data is not authorized.

(3) In summary, computer processing provides for transaction code input data being processed automatically by standard programs to produce uniform output in conformity with the criteria established in regulations and policies relative thereto. It is this cycle of automatic selection and comparison of highly repetitive routine data by computer processes that relieves the commander of slow reacting manual effort currently required to produce the same result.

h. Alternate Capabilities.

(1) Alternate capabilities for continuous operation of a personnel records keeping automatic data processing system are inherent in the mutually complementary relationship maintained between levels of data processing activities and echelons of command.

(2) All changes which affect individual or unit status are reported to the second level of responsibility for maintenance of the command tape for supported units. Such changes also successively update the administration file (third level) at the PAC and Headquarters, Department of the Army (fourth level) personnel file. This provides the technical capability to recover and reconstruct all or any portion of the total system.

(3) Limited losses or isolated disability of a portion of the system is resolved in a scheme of support allied to that echelon of command capable of reconstructing the logistical as well as the administrative status of disabled elements. Within the theater of operations, the field army represents the most logical and practical intermediary between divisional and nondivisional elements. Therefore, standby procedures are designed for the systematic shipment of command tape files and transactions tapes to designated alternate site on a daily cyclic basis. As each increment of the tapes is received at the designated sites, obsolete tapes are erased and redistributed for reuse by division and Corps/Army Support Brigade data processing activities. In the COMMZ area, this capability is provided by the PAC in the same manner.

8. Interface Relations

a. DA Systems. The interface relation of the proposed system to CONUS systems is primarily based in the logical extension of the vertical theater system to Headquarters, Department of the Army. This requires an expansion and standardization of the personnel data base currently maintained for officer and enlisted personnel on magnetic tape. The minimal retention of hard copy data within the theater army also generates an influx of such material for permanent retention at a centralized repository within CONUS. The co-location of these functions is not deemed to be necessary or desirable in view of the active nature of the data base on one hand and the passive retention of hard copy on the other. However, these functions serve jointly as the fourth level of responsibility for records keeping.

(1) The expansion and standardization of the computer data base at Headquarters, Department of the Army would complete the inverted pyramid of personnel data to provide immediate access to raw data consistent with authority and need at all echelons of command.

(2) The vertical flow of raw data between levels within the system as described in paragraph 7*b* is designed to complement each successively higher level to Headquarters, Department of the Army. The composition of the data base at each level consists of the type of data peculiar to and commensurate with the authority and responsibilities for lateral interface at those levels.

(3) This inverted pyramid of data provides the impetus for a shift in emphasis with respect to reports generation and production. Ultimately, this could serve to reduce, if not eliminate, the library of controlled recurring reports prepared throughout the

Army in response to Headquarters, Department of the Army and Department of Defense requirements, since the data represented in such reports are readily available at those headquarters for compilation and dissemination. This umbrella effect is designed to protect field commanders at all levels from a deluge of report requirements in various forms derived from the same basic raw data pertaining to the individual.

b. ZI Armies. Although the design of a system for the Zone of Interior Armies is not within the purview of this study, an interface relationship must exist and must be defined. Therefore, the observations discussed below are based on the assumption that all records within the army will be maintained in the same manner; although the assignment of functions and responsibilities may differ widely between CONUS and the theater of operations.

(1) By current standards, ZI Army commanders function in relation to troops stationed within the geographical limits of their command in the same manner as the TASCOM commander in relation to COMMZ units. Therefore, the ZI Army commander will normally be considered as operating at the second level of responsibility for personnel records keeping. Based on operational necessity for contingency planning this function may be further delegated to state areas, in which case the ZI commander would operate a PAC at the third level of responsibility.

(2) In view of the transportation and communications facilities available within CONUS, the third level of responsibility, represented by the PAC in the theater army, would normally be assumed by the Headquarters, Department of the Army, activity. However, based on a potential operational necessity for contingency planning described in (1) above, this function could readily be delegated to ZI Army commanders as the intermediary between state areas and Headquarters, Department of the Army.

(3) The shift in personnel accountability for personnel proceeding to or from CONUS would be accomplished by report of status changes between the PAC and the Headquarters, Department of the Army, activity. The transfer of field administrative personnel records would be performed by Headquarters, Department of the Army direct to the PAC based on the actual composition of shipments at the ports of embarkation. Movements from the theater army to CONUS for evacuation or rotation would be reported by individual reports of change of status. Upon determination of the CONUS assignment for returnees, the appropriate records data would be reproduced from the Headquarters, Department of the Army file and transmitted to the appropriate ZI Army command. The hard copy data would be retained at the designated Headquarters, Department of the Army repository.

c. Related Theater Systems. The interface between parallel vertical combat service support systems in the area of personnel and administration is at the PAC. Secondary, or supplemental, interface at the local level is accomplished as indicated below. Inasmuch as these services in support of a division are generally organic to and therefore a part of the internal administration of the division, the problem of interface is considerably reduced and the degree of correlation is academic. However, support of nondivisional units presents more complex problems to which these comments will be more directly applied. It may be noted that interface between systems is to be achieved primarily as a result of computer programming techniques using transaction codes as the index to automatic reaction to related requirements of other support functions to produce a fully integrated system. For example, termination of an assignment may be accomplished by reason of separation, reassignment, or death. Each of these reasons may involve termination of quarters, if appropriate; how-

ever, computation of final pay is required only for separation or death, but even for these the basis for computation is not the same. Therefore, the computer program, based on policy and directives, is designed to process transactions to automatically produce the correlation with other functions and systems as required by such policies and directives.

(1) *Medical.* Organizational strength data and the composition of dependents population in the servicing area of medical facilities are furnished by the second level data processing activity upon request or as required by preestablished schedules.

(2) *Military police.* Information relative to AWOL, desertion, and missing personnel is furnished automatically to military police activities within the area of servicing support. Apprehension or recovery of such personnel is reported by military police activities vertically through military police systems to the PAC.

(3) *Grave registration.* Reports of burial and information relative to recovery of deceased personnel is transmitted through the Theater Army Graves Registration system for coordination with casualty data at the PAC. In order to promote early recovery of deceased and missing personnel, the servicing data processing activity (second level) provides the appropriate graves registration office activity data as to the location and types of casualties experienced by supported units.

(4) *Finance.* Generation of certain notices of pay change is accomplished at the second level from the command tape. The adjustments are reported to the servicing finance officer and processed as input to the FCUSA for computation.

(5) *Chaplain.* Personnel data relative to matters of concern to chaplains is provided by the servicing data processing activity (second level) upon request. Chaplains reports relative to marriages, burials, and other matters flow vertically through appropriate channels and are correlated with data maintained at the PAC.

9. Operating Procedures

The procedures applicable to each level of responsibility within the theater are—

a. First Level. The principal personnel management tool of the small unit commander is the Unit Manning Report. This report is prepared by the servicing data processing activity as changes warrant or as required by the unit commander. Changes in the status of individuals or the unit are reported by various means, as appropriate to the nature and source of the report, as follows:

(1) Numerous minor changes relating to personnel status or unit structure and composition may be accomplished by using a transaction code for the action desired to note the new information in the space provided on the Unit Manning Report.

(2) Complex changes or those relating to items of information not recorded on the Unit Manning Report may be submitted on separate Data Request/Change Forms. Depending on the volume of changes or actions to be reported these forms may be submitted in lieu of, or attached to, the Unit Manning Report.

(3) Data originating at sources external to the servicing data processing activity and supported units will be in a form consistent with the system from which it emanates. However, interface requirements between parallel systems will dictate the standardization of common essential elements of individual identity and transaction codes applied in such situations. Hard copy documentation, magnetic tape, or digital data transmission may be used between interfacing systems, as operational requirements dictate.

(4) Those supported units equipped with digital input/output devices or other equipment capable of producing data

in an electronic or mechanical form oriented to computer processing, such as punched card or paper tapes, will use transaction coding techniques to transmit requirements for information or action. A catalog of standard transaction codes including format and composition will be used for this purpose. However, unusually complex transactions may be accomplished as described in paragraph 5*a*(2) at the discretion of the local commander.

b. Second Level. At this level of responsibility for personnel records keeping and reports, operating procedures encompass the initial processing of input data from first level sources, the exchange of data/information between data processing activities at this level, and the transmission of data to satisfy vertical systems requirements relative to personnel status and strength. Operating procedures to be applied in processing changes in status and request for information or action will be determined by the mode in which such input is received, as follows:

(1) *Hard copy source data* as a form of input includes Data Request/Change Forms, posted copies of Unit Manning Reports, published orders and directives, and verbal requests.

(*a*) Hard copy requests for information or action are processed in the Records Processing Branch activity of the servicing personnel service activity.

(*b*) Documents and correspondence are distributed and controlled within the branch according to a predetermined scheme by type of action required or unit identity of the individual concerned.

(*c*) Personnel records specialists analyze and translate incoming documents or requests into automatic data processing transaction codes identifying the pertinent fixed and variable data as required.

(*d*) Due to the large volume and varied nature of the workload at corps, army, and the area support command, the coded transactions are reviewed for accuracy and completeness and authenticated by senior personnel records specialists.

(*e*) A punched paper tape is then prepared on all approved transactions, and simultaneously a transactions register is created. The punched paper tape is used as input to the computer system. The transactions register is retained pending verification of completed transactions.

(2) Directed computer input as a form of input includes digital data transmissions from remote and local direct input devices and between computers, as well as magnetic tapes, punched cards, and paper tapes. These media are processed by computer according to a predetermined schedule of priorities. Rejected transactions are analyzed and processed for resubmission by records processing branch.

(3) The internal computer operation is designed to process and execute the actions required to update the command tape and produce the necessary output data to reflect the new status, action, or information as required. This includes, but is limited to, publication of orders, preparation of extracts and transcripts, and accumulation of statistical data for subsequent processing, computations, and reports.

(4) As a result of the daily command tape update processing cycle(s); a byproduct transactions tape of completed actions is produced for direct transmission or shipment, as appropriate, to the PAC at theater level. Statistical data and reports, as required, are produced on magnetic tape for transmission or shipment through command channels for manpower control purposes.

c. Third Level. The personnel records keeping operating procedures at this level of responsibility are essentially the same as at the second level except for the increased volume

and complexities commensurate with the higher echelon of command. The PAC is the custodian of the field administrative personnel record and is the apex of parallel vertical personnel and administration systems within the theater. Therefore, all personnel data relative to status and strength are reported promptly to the PAC by servicing data processing center activities. The bulk of this data normally is transmitted from computer to computer or by shipment of magnetic tapes, punched cards, or paper tapes. The hard copy data received at this level is not of the same variety as that which serves as input to the second level. Maintenance of the field administrative personnel records includes retention of selected historical documents, such as records of courts and boards, legal document, and other papers, photographs, or charts not conducive to digital data translation, or which bear the certifying or authentication signature of the individual concerned. These documents will be retained in accordance with a predetermined disposition. Such records are to be considered transitory in nature for limited retention; however, prior to disposition to a CONUS repository, certain records to be retained within the theater for future reference will be reproduced by photographic miniaturization and maintained in the Theater Records Library.

Section II. PERSONNEL MANAGEMENT AND ACTIONS

10. General

The salient aspects of the procedural changes in the functional areas of personnel actions and personnel management are the flow of communications and the principal of insertion of information at the point of origin. Personnel actions and personnel management are intimately aligned with the personnel record keeping function and, as such, aid in management and control. Recognition and effective use of the information available at the various levels of responsibility greatly reduce the necessity of requiring subordinate echelons to submit reports and to keep voluminous information available.

11. Personnel Management

a. Personnel management responsibilities continue to be those defined in AR 600–16 and AR 600–17 and include, for example, classification and reclassification, assignment of individuals, processing of applications for schooling, personnel utilization, appointments, promotions, reductions, redeployment, and rotation of personnel.

b. The personnel management system for TASTA–70 is essentially the same as the current system except for the areas of replacement assignment and casualty reporting and recording. Replacement assignment and casualty reporting are discussed in paragraph 13 through 22. Procedurally several changes are instituted in the personnel managament system.

(1) Communications concerning an action within the personnel management area flow from company level direct to that level of command that can complete or influence the action.

(2) The flow of communications for action in the personnel management area normally follows the same path as personnel status information. Personnel management actions for nondivisional units flows to a Personnel Service Company—for example, the Personnel Service Company of the Army Support Brigade for all Field Army troops and all Army Support Brigade units. The servicing Personnel Service Company acts under the policy of the appropriate commanders concerned in processing personnel management communications. In those instances where the commander's policy requires submission to his headquarters prior to making final decision, the personnel service company assembles all supporting data prior to forwarding the communication. When final decision is made, all correspondence is returned to the Personnel Service Company for final processing.

(3) Most personnel management actions require less information to be provided by the initiator (normally company level) since the required research for criteria and policy is accomplished by the servicing personnel service company. For example, a company commander desires that a member of his unit receive school training—he communicates the request specifying only the training required and the individual to be trained. The servicing personnel service company analyzes the request for eligibility of the applicant and availability of specified training prior to further processing, as required, to complete the action.

(4) With input/output devices, as described in paragraphs 23 through 34, and when individual service member signatures are not required, the communication between the initiating unit and the higher levels of responsibility will be other than hard copy correspondence.

c. For those actions where the approving authority is retained by the theater army commander the particular action communication flows to the Personnel and Administration Center (PAC) of the Personnel Command. The Personnel and Administration Center takes action, within policy, for the theater army commander. As a basic practice, approving authority is delegated to the lowest possible level of command commensurate with Department of the Army and theater policy.

12. Personnel Actions

a. Personnel actions continue to be those actions defined in AR 600–16 and AR 600–17 and include, for example: release from active duty, discharges, extension and curtailment of foreign service tours, officer efficiency reports, and requests for leave.

b. The personnel actions system for TASTA–70 is essentially the same as the current system. Procedurally, several changes are instituted.

(1) In keeping with the overall TASTA concept of reduction of hard copy records, the procedure of keeping a separate personnel data card for each individual in a unit is discontinued.

(2) The flow of personnel actions is from the company level direct to that level of command that can complete or influence the action. For example, a request for hardship discharge cannot be approved or disapproved by the battalion echelon; therefore, the communication is not routed to the battalion commander.

c. The flow of personnel actions normally follows the same path as personnel status information, that is, from initiating unit to the servicing personnel service company. In processing personnel actions for nondivisional units the personnel action communication flows to a Personnel Service Company—for example, the Personnel Service Company of the Corps Support Brigade for all Corps troops and all Corps Support Brigade units. The Personnel Service Company of the Corps Support Brigade normally acts under the policy of and for the appropriate commanders concerned in processing personnel action communications. In those instances where the commander's policy requires submission to his headquarters prior to making final decision, the personnel service company assembles all supporting data prior to forwarding the communication. When final decision is made all correspondence is returned to the personnel service company for final processing.

d. When approval authority is retained by the theater commander this particular action communication flows to the Personnel and Administration Center (PAC) of the Personnel Command. The Personnel and Administration Center takes action, within policy, for the theater army commander. As a basic practice, approving authority is delegated to the lowest possible level of command commensurate with Department of the Army and theater policy.

Section III. AUTOMATED SYSTEM FOR ASSIGNMENT OF REPLACEMENTS

13. General

This section describes organizational and operational concepts, data flow, command management requirements, and quantitative workload, and the effect of the proposed concept for assignment of replacements on the current system.

14. Organizational Concepts

The proposed operational concepts for the assignment of replacements have been designed to conform with the total TASTA–70 organizational and operational concept of combat service support.

a. Divisional Units. The Division Administration Company maintains the personnel command record file and provides information concerning personnel shortages and replacement status reports for individuals assigned or attached to the Division.

b. Nondivisional Units. The Personnel Service Companies in FASCOM and ASCOM Communications Zone maintain the personnel command record files and provide information concerning personnel shortages and replacement status reports for individuals assigned or attached to units supported.

c. Theater. The PAC of the Personnel Command maintains the field adminstrative personnel record file on all theater army personnel. The PAC requisitions, assigns, and operationally controls individual and unit replacements, including returned-to-duty personnel generated within the theater. The replacement element of the PAC centrally performs reclassification and reassignment actions for theater generated replacements.

15. Operational Concepts

a. General. Individual personnel replacements are assigned by the Personnel and Administration Center of the Personnel Command, using automatic data processing techniques to match inventories against existing vacancies and considering theater established priorities. Senior officers and selected personnel are "name" assigned in accordance with theater army policy. Replacements remain under control of the theater army commander until they arrive at the parent unit of assignment. Commanders at all levels control replacements by changing priorities of assignment, by reassignment actions, and if absolutely necessary, by diversion as authorized by the theater army commander.

b. Personnel Requirements. Theater army submits monthly to the Department of the Army a projection of personnel requirements on an 8, 6, 4, 2, 1 month and 2 weeks need, reflecting requirements by MOS and grade. The 2 weeks projection serves as the theater army requisition. Projections are adjusted with each submission. Projections are coordinated with theater army G–1 to ascertain change to the troop basis and projected tactical operations and priorities that will influence replacement requirements. Unit replacement requirements are recommended to the theater army G–1 and G–3 for approval. Requirements are based on known losses and estimated combat losses. Known losses reported by the direct support personnel units (Personnel Service and Administration Companies) are consolidated at the PAC and supplemented by the estimated personnel losses derived through the use of personnel loss rates. Requisitions to Department of the Army include shipping instructions as to ports of debarkation within the theater for specified replacement shipments. Emergency requisitions for critical requirements are submitted to Headquarters, Department of the Army at any time.

c. Assignments. Vacancy files are transmitted to the theater army replacement element in the PAC from the direct support personnel units. These files reflect total vacancies for each division and vacancies by individual organizations for nondivisional units. The individual battalions and companies assigned to a division will not be identified, whereas the individual battalions and companies assigned to nondivisional units will be identified.

(1) Replacement regulating units transmit information concerning intratheater replacement activity to the theater army replacement element of the PAC.

These reports reflect the assignment availability of personnel from inactivated units, availability of return to duty (RDT) personnel, as well as amendments to assignments of transient replacements diverted from initial destination.

(2) Assignment information is transmitted by the replacement element of the PAC to the initial replacement regulating unit receiving the replacements. Formal assignment information/instructions are issued in lieu of the publication of separate orders to promulgate the assignment section. The command personnel records of individual replacements are transmitted to the appropriate direct support personnel unit servicing the unit(s) of assignment. Upon receipt of the command personnel records the direct support personnel unit notifies the appropriate units of replacement assigned by means of the unit manning report. These individuals are carried on the manning report as in-transit until they physically arrive at the unit of assignment. They are then reported by the unit as present-for-duty and become a part of unit accountability.

(3) Subordinate commanders, i.e., TASCOM, field army, and corps, may in case of operational necessity divert replacement shipments assigned to their subordinate units in accordance with theater army policy. The commander directing the diversion notifies the PAC of the individuals, by MOS, diverted to each organization. When an entire shipment is diverted to one unit, the servicing direct support personnel unit of the losing unit is only notified of the fact and instructed to transfer the command records to the gaining organization. However, if a shipment is split and transported to two or more new locations, the PAC controls retransmission of records. The PAC notifies the unit holding the records of personnel by name and identification number and instructs the losing unit to transmit the records to the gaining units. Since initial assignment action on replacements is predicted on a criterion of priorities established by major commands, diversion of replacements within such commands has been incorporated into this system as a controllable emergency exception.

(4) This system can operate under any of the following assignment policies:

(*a*) Assignments initially made by the Department of the Army.

(*b*) Assignments made by theater while replacements are en route from CONUS or other ports of embarkation.

(*c*) Assignments made by theater after replacements arrive in the theater of operations.

(5) Centralized control is exercised at theater army level with decentralized operations performed by the replacement regulating units. Upon arrival or reported availability of replacements within the theater, the PAC exercises complete control over the assignment of replacements. Replacement regulating detachments are assigned to the Personnel Command TASCOM and the Army/Corps Support Brigades of the FASCOM. These units are formed from a cellular TOE and perform the mission of receiving replacements from CONUS, receiving theater army generated replacements, providing mess and billets to replacements en route, and staging unit replacements. In the event replacement shipments, unit or individuals, fail to arrive at unit of assignment, the replacement element of the PAC cancels assignments made, with information to the servicing direct support personnel unit and major command, and adjusts the consolidated vacancy file. On receipt of cancelled assignment instructions the servicing direct support personnel unit adjusts the daily vacancy tape accordingly.

(6) A throughput flow of replacements provides a continuous movement of personnel from ports of embarkation to using units. Replacements either have assignments made prior to their arrival or immediately after arrival in the theater. Assignment orders from the replacement element of the PAC are sent to the replacement regulating detachment initially receiving the replacements. Any delay in receipt of assignment instructions dictates the immediate movement of the replacements from airhead or water port to the nearest replacement unit having billeting and subsistence capability. Upon the issuance of assignment instructions, the replacements are moved through transportation facilities to the unit of ultimate assignment. In the movement of replacements through transportation facilities, the replacement regulating units, advantageously located along the lines of communication, service the replacement flow with required support. Additionally, these replacement regulating units act as checkpoints in the control of replacements within the system.

(7) Assignments for all enlisted personnel and officers through the grade of 0–5 are made by matching the MOS and grade against the vacancy position through computer programing and, in those cases where special requirements have been furnished the PAC in advance, the assignment of special category personnel will be coordinated with the appropriate command. In those instances when a replacement cannot be assigned to reported vacancies due to dissimilarity of MOS and grade or other restricting assignment limitation, appropriate action is taken by classification and assignment personnel. Assignment of personnel of grade 0–6 or higher is manually accomplished based on an abstract of the command personnel record and a listing of available vacancies.

(8) Theater army replacement stockage is reduced to a minimum based on immediate requirements; however, stockage may be increased by a short range lead (0–7 days) to sustain planned major tactical operations where the transportation capability cannot support the planned replacement movement required.

(9) Theater generated replacements, such as return-to-duty personnel from hospitals and confinement or rehabilitation facilities, receive assignment instructions from the replacement element of the PAC through the replacement regulating unit servicing the hospital, confinement or rehabilitation facilities. Individuals are returned to their unit of origin in accordance with theater Army policies. Their return to unit of origin is not mandatory.

(10) Replacements are charged against theater trainee, transient, and patient strength (TT&P strength) upon their departure from the port of embarkation. They remain charged against TT&P strength until their arrival at the unit of assignment. A continuous inventory of replacements from ports of embarkation to unit of assignment is maintained by the replacement element of the PAC. This replacement status report reflects the number of replacements assigned against requirements, number of replacements received, and number of replacements required but not available. The replacement element of the PAC advises Department of the Army to move packets of individual replacements to a point of entry closest to ultimate units of assignment of the replacements. Simultaneously, the replacement element of the PAC notifies the replacement regulating unit servicing the particular point of entry of the pending arrival of replacements, including shipment number, names, and units of tentative assignments. Upon arrival of replacements

in the theater, the receiving replacement regulating unit verifies individual and unit assignments made by the replacement element of the PAC. Assuming transportation is available, replacements are moved directly to unit of assignment.

(11) *Unit Replacements.* Normally, unit personnel losses will be filled by individual replacements until it is determined, by command decision, that the unit can no longer perform its mission in combat. Several factors must be considered in determining when a unit is no longer combat effective. The strength of a unit and the physical and mental status of surviving personnel are basic considerations, but no set formula can be prescribed. Therefore, commanders must weigh each personnel factor having a bearing on the combat effectiveness of their units. As a general rule, any battalion or company size unit which sustains 40 percent casualties in a short period of time will be considered ineffective. Other factors to be considered are substantial losses of unit officers, noncommissioned officers, and specialist personnel.

(*a*) Depleted or ineffective units are relieved if a suitable battle replacement unit is available. The decision to relieve a unit in the absence of a battle unit replacement is a command decision governed by an analysis of current and future situations to determine if the current situation demands that the unit be kept in action. Depleted or ineffective units which, in the opinion of the commanders of major commands, can be restored within a short period of time remain with the parent organization (division, corps, army). Necessary re-equipping and retraining is conducted concurrently with regeneration or reconstruction while the unit is in reserve. The determination as to whether a depleted unit requires regeneration, reconstruction, or inactivation is dependent upon the evaluation of the factors mentioned above. Final decision rests with the appropriate commander concerned.

(*b*) Fully trained units from CONUS may be assigned directly to the unit of their ultimate assignment and, if so, are not moved through replacement regulating units. The primary interest of the theater army replacement system in these units is from an accounting standpoint. Operational control of unit replacements, when staging is completed, is released to theater G–3. The replacement element of the PAC coordinates the projected points of staging with the Supply and Maintenance Command in order that organizational equipment may be issued to unequipped unit replacements entering the theater.

16. Operating Procedures

The procedures applicable to personnel requirements, assignments, movement, and control of replacements are—

a. Personnel Requirements. Estimates of individual officer replacements are by branch, grade, and MOS; estimates of warrant officer replacements are by MOS; and estimates of individual enlisted replacements are by MOS and grade. Estimates of unit replacements are by current TOE number. Estimates are based upon net losses as determined through the application of loss rate tables and adjusted by administrative losses and gains occasioned by reorganization, changes in strength ceilings, and intratheater gains. The replacement element of the PAC receives daily vacancy files from servicing direct support personnel units. These vacancy files contain unit identification to assist in the assignment and shipment of individual and unit replacements. Vacancy files are prepared by scanning the command personnel records of the servicing direct support personnel units for existing and pending

vacancies. The replacement element of the PAC fills these requisitions to its maximum capability, based on priorities established by theater army headquarters. Unfilled requisitions are cancelled since the servicing direct support personnel unit's computers requisition all requirements daily. Thus, each day's requisitions reflect the actual situation by unit within the theater army. At the time replacement requisitions are filled, the replacement element of the PAC will advise the major commands of the number of replacements allocated by grade, branch, and MOS for each unit and will provide the gaining direct support personnel units with the personnel command record of the assigned replacements. In periods of replacement shortage, commanders may, if absolutely necessary, divert shipments within subordinate elements of their commands. However, while in transit, replacements will normally be diverted to alternate assignments by redirect action by the theater army headquarters. The replacement element of the PAC prepares a weekly theater army requisition to reflect individual and unit requirements. The requisitions are based on vacancies within the theater army. Requisitions contain priority codes to permit Headquarters, Department of the Army, to ship replacements based on priority of the MOS and priority of the receiving organization when full requirements cannot be furnished. Changes to requisitions are submitted to Department of the Army at any time prior to arrival of the replacements. Department of the Army informs theater army in the event requested changes cannot be made. This notification permits theater army headquarters to react and make appropriate diversions within the Theater Army Replacement System.

b. Assignments. All enlisted personnel and officers through the grade 0–5 are computer assigned at the PAC by matching the MOS and grade of the vacant position with the MOS and grade of the individual. In those cases where special requirements have been furnished to PAC in advance, the assignment of special category personnel will be coordinated with the appropriate command. Officer personnel in grade 0–6 and other selected personnel, are assigned manually based on an assignment abstract of the command personnel record. All units are filled within priorities established by theater army. Replacements unable to be assigned to a duty position are printed out on the unassignable file. The classification and assignment officer will make manual assignments from the list of remaining vacancies and unassignable replacements. Hospital returned-to-duty personnel will be assigned, if physically qualified for the PMOS held at the time of hospitilization, to their former unit providing a vacancy exists. If not qualified physically for their PMOS they will be reclassified into another MOS for which qualified and assigned in accordance with existing requirements. Units furnished through the replacement system retain their identity as units. They are assigned only as replacements for troop basis units. TOE replacement units remain under theater army control until they have reached a state of movement readiness at which time they are assigned to the designated command.

c. Movement and Control. The replacement element of the PAC notifies the replacement regulating units at points of entry of incoming shipments from CONUS. Replacement regulating units located at points of entry furnish daily to the replacement element of the PAC a report reflecting the numbers and types of replacements received and placed in transit to predetermined destinations, and the numbers and types on hand awaiting onward transportation. The replacement element of the PAC keeps major subordinate headquarters informed of replacement allocations made to their units. Individuals who fail to arrive with other members of their shipment are reported by replacement regulating units to replacement element of the PAC, which informs Headquarters, Department of the Army of nonarrivals after insuring that they are not carried elsewhere in the theater army inventory.

17. Command Management Requirements

Command management is exercised through the allocation of priorities for units based upon operational considerations. Each major command furnishes Headquarters, Theater Army priorities for assignment of replacements to his subordinate units.

18. Interface Relations

The major interface of the automated system for assignment of replacements other than with Headquarters, Department of the Army is with the Transportation and Supply and Maintenance Commands. In order to move replacements into or within the theater, actual and anticipated transportation requirements must be furnished the Movements Control Center of the Transportation Command. The replacement element of the PAC provides the Movements Control Center with transportation requirements and forecasts, and the Movements Control Center furnishes the replacement element of the PAC with movement instructions. This exchange of information is accomplished so that the two systems interface to the maximum extent possible. The replacement element of the PAC also coordinates with the Supply and Maintenance Command the projected points of staging in order that organizational equipment may be issued to unequipped unit replacements entering the theater. The interface with Headquarters, Department of the Army is accomplished by the vertical Personnel and Administrative system which extends from unit through Department of the Army level. This vertical system reports requirements by composition, status, and/or strength based on individual status changes reported via digital data transmissions from data processing elements of supported activities within the theater army.

Section IV. CASUALTY REPORTING

19. General

This section describes the proposed organizational and operational concepts, operating procedures and data flow, command and management requirements, quantitative workload, and the impact of the proposed concepts on the current system for reporting casualties.

20. Organizational Concepts

a. The proposed organizational concepts for casualty reporting conform to the total TASTA–70 concept of combat service support as indicated below.

(1) *Divisional units.* The Division Support Command maintains the command tape file and provides the personnel management services required in the reporting functions relating to the casualty status of individuals and units assigned or attached to the division.

(2) *Nondivisional units.* The Corps/Army Support Brigade, FASCOM, and Area Support Command, TASCOM are organized in essentially the same manner for corps, army, and COMMZ units as the Division Support Command is for division units, except that the exercise of command prerogatives with respect to investigations involving casualties is maintained in the organization command structure of the major supported command elements.

(3) *Theater.* The Personnel and Administration Center (PAC), Personnel Command, maintains the field administrative personnel record file on all theater army personnel and units and provides personnel management services required in the adjudication of casualty status and review of boards and investigations relative thereto. A Theater Casualty Processing Section, PAC, is proposed for this purpose.

b. The personnel staff noncommissioned officers and clerical personnel allocated to the various echelons of command for divisional and nondivisional personnel administrative matters perform actions relating to the investigation of circumstances surrounding reports of nonbattle casualties as an addition to other duties. Initial reports of change in status of individuals will be processed in the same manner as prescribed for other changes in the maintenance of personnel records and command tape files.

c. The Casualty Branch, PAC, consists of a Headquarters, Battle Casualty Unit, Non-

battle Casualty Unit, and Post Mortem and Records Unit.

(1) The Battle and Nonbattle Casualty Units are primarily responsible for the examination and review of individual status reports from medical or military police activities and the findings of Reports of Investigation involving line-of-duty determinations.

(2) The Post Mortem and Records Unit is primarily responsible for the administrative processing of reports or inquiries relating to deceased personnel, burials, posthumous awards, and disposition of remains.

21. Operational Concepts

a. General. Within the army in the field a casualty reporting system is primarily concerned with the initial report of individual casualties and the transmission of such data to the theater army casualty processing section, where verification and correlation of all casualty data are performed. The theater casualty reporting system also provides the means for assessment and evaluation of mass casualty situations; accumulation of statistical data required in the development of loss rate tables; compilation of statistics on personnel returned-to-duty from a casualty status; and processing unidentified casualty actions received from lower echelons (fig. 2).

b. Criteria. There are two criteria to be considered in the design of a theater casualty reporting system. The first and most urgent is the prompt and accurate reporting of casualty incidents involving changes in the status of individuals and subsequently the strength and effectiveness of units. This is generally associated with those categories of casualties experienced in a battle or an otherwise hostile environment. The second facet of casualty reporting relates to those processes involved in the investigation and determination of line-of-duty status of nonbattle casualties.

c. Status Reporting. The initial change in status of an individual as a casualty is reported by the most expeditious means depending on the communications facilities available to the reporting activity. Normally, this is accomplished by transmission from direct input devices linked to the servicing data processing activity or by submission of Data Request/Change Forms to the servicing activity for conversion to ADP media for processing. This does not preclude reporting such data by radio or telephone provided such means of communications are secure. A predetermined transaction code format will be used in all initial casualty reports regardless of the mode of communication.

d. Substantiating Documents. The need for substantiating documents is established on the basis of requirements for verification and determination of casualty status of the individual; investigation, determination, and review of line-of-duty determinations; complete and accurate notification to next of kin; and in the settlement of future claims for or against the government. Except in the case of missing in action (MIA) personnel and unrecovered remains requiring witness statements, the majority of hard-copy substantiating documents are related to nonbattle casualties. The nature of these documents and the command responsiblity incident thereto dictate submission through command channels, as opposed to the flow of initial casualty status reports and strength data through servicing data processing channels.

e. Procedures. Upon receipt of information regarding an individual casualty incident, actions will be taken as follows:

(1) The unit commander (first level) or designated representative, annotates the Unit Manning Report with the appropriate transaction code to include data, place, and time of change in status. Line-of-duty status and reference to witness statements will also be shown as appropriate. These data are reported to the servicing data processing activity by direct input digital devices or submission of a copy of the annotated Unit Manning Report with other personnel changes.

(2) In those instances involving nonbattle casualties, Data Request/Change Forms are also prepared as a cover report for substantiating documents

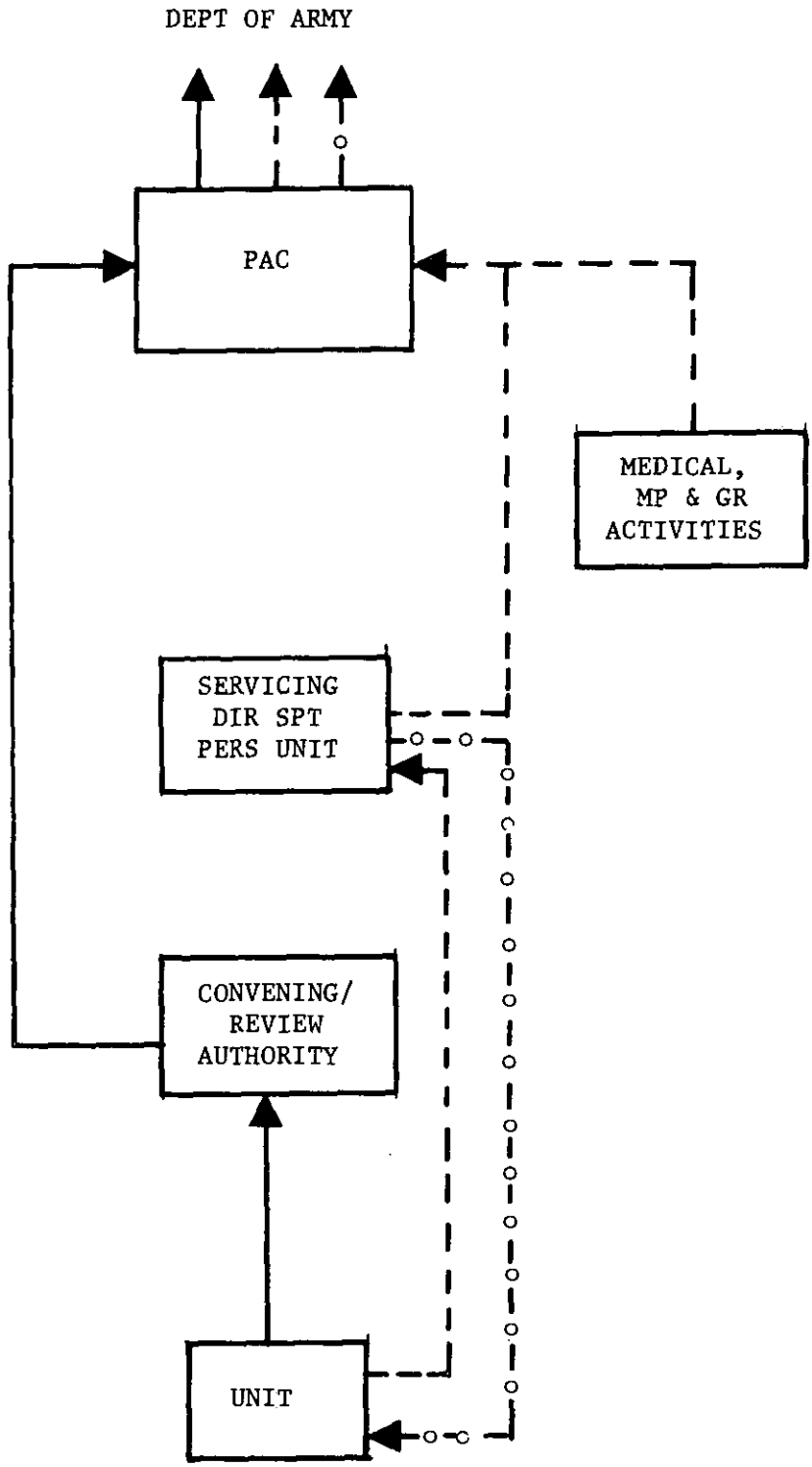

LEGEND:

Adm Lod & Supporting Documents

Status

Strength Data

Figure 2. Casualty reporting data flow.

describing the circumstances surrounding the incident. These administrative reports are forwarded to the convening authority for line-of-duty determination or review. Upon approval of these determinations or reviews, the file relative thereto will be forwarded directly to the PAC for final disposition. Substantiating documents or reports on MIA or unrecovered remains will be forwarded by the unit commander directly to the PAC for verification and determination of casualty status.

(3) The servicing direct support personnel unit (second level) processes casualty transactions received from supported units via direct input digital devices and annotated copies of Unit Manning Reports. Those transactions representing losses to the supported unit result in deletions from the command tape file and additions to the record of personnel losses file. Other transactions not involving losses are processed for awards and decorations or other administrative matters as required. All changes in individual status are reported to the PAC by intercomputer communications links for update of the administrative file maintained at that level and ultimate transmission to Headquarters, Department of the Army.

(4) The PAC (third level) processes all casualty data received as input from a variety of sources throughout the theater such as medical, military police, and graves registration systems. Data received from parallel vertical systems are collated and merged with the basic or initial report of casualty status emanating from the unit (first level) of administrative responsibility. Since each category of casualty status must be validated by supporting evidence, any void or conflict in corroborating data will be reconciled by PAC prior to final determination and release of casualty data to Headquarters, Department of the Army.

f. MIA Suspense Actions. As discussed in *e*(4) above, all reports of casualty status require supporting evidence to validate such changes. Normally this is established by positive corroborating data emanating from other parallel systems or physical proof readily identifiable as conclusive. In the case of MIA personnel, the reverse condition serves to corroborate such reports as valid. In the absence of any reports from medical, military police, graves registration, or other commands and activities to the contrary, a MIA status may be tentatively accepted pending detailed and prolonged investigations of all possible sources. Therefore, although all reports of MIA individuals are to be promptly transmitted to the servicing data processing activity and the PAC, such records are temporarily suspended from deletion on the command tape file of the supported unit. Based on theater policy, strength accountability for such personnel is retained by the unit of assignment pending expiration of a prescribed number of days to preclude unnecessary and unwarranted deletion and reestablishment of records during this period. This allows sufficient time to permit related operational systems to assist in the production of sufficient data for preliminary verification.

g. Disposition of Records. Personnel records data of individuals dropped from the rolls and strength accountability of the unit of assignment are deleted from the command file as a byproduct of daily processing of casualty transactions. Such data are retained at the servicing data processing activity as working files in the accumulation and production of casualty historical and statistical data for the supported unit. Reports of investigations and the results of administrative boards and other supporting documents relating to casualties are forwarded to the PAC when they have served the primary purposes for which intended.

h. Strength. Casualty statistical reporting of the quantitative nature of status changes is a primary function of data processing activities at the second and third levels of responsibility for personnel records keeping and reports. This is accomplished at division support commands and at corps, army, and area support brigades.

(1) Casualty statistical data are accumulated as a byproduct of the daily update processing cycle of the command file. Therefore, data relative to certain categories of casualties are readily available on demand for local command or management purposes. These data are also reflected in routine strength statistics provided unit commanders.

(2) The PAC accumulates and computes statistical data required by Headquarters, Department of the Army systems on a theater-wide basis from verified status and strength data obtained in processing the field administrative personnel file at that level.

(3) A statistical recapitulation is automatically provided as a matter of routine to each unit supported by the various servicing data processing activities at the second level of responsibility for records keeping. These data are distributed as Part II to the Unit Manning Report for the information and guidance of unit commanders.

i. Loss Rate Tables. These tables of casualty statistics and related variables are designed to provide commanders with a calibrated estimate of the number of casualties which may be expected during a tactical encounter within defined limitations. Such data are utilized in the forecasting of replacement requirements prior to the actual execution of the tactical plan. Therefore, casualty statistics must be defined with respect to such contributory factors as type of operation, terrain, weather, character and disposition of opposing force, and types of weapons. For these purposes casualty statistical data must be maintained in their original form as raw data for research and analysis at theater level in preference to the submission of a series of summarized averages or percentile factors by lower echelons of command.

j. Command/Management Requirements.

(1) The command/management requirements for casualty data are basically the same as for other categories of losses. All changes in status which affect unit effectiveness are processed and available through the personnel records keeping ADPS. The latter system is designed to accumulate raw data for research and analysis as required by command or staff personnel.

(2) Decision making exercised in connection with personnel operations and management remains the responsibility of the appropriate commander or designated staff officer. Input data relating to casualties are reduced to the simplest terms and forms consistent with speed and accuracy essential to such reporting.

(3) Standard transaction coding and language is utilized as described for other changes in status required for effective personnel records keeping. It is to be reiterated that the commander is recognized as the primary source of casualty data. However, casualty reporting, as opposed to other less critical categories of personnel administration, requires a continuing effort on the part of all personnel to provide followup action on all unresolved cases.

22. Interface Relations

The interface of the proposed casualty reporting system to Department of the Army, Zone of Interior armies, and related theater systems is identical to the logical extension of the personnel records keeping ADPS. Casualty status reporting is one facet of the total integrated system of strength and status reporting and personnel management essential to an effective personnel records ADP system. Therefore, no unusual or atypical interface is necessary or desirable.

Section V. ADMINISTRATIVE SERVICES

23. General

Administrative services functions throughout the theater of operations are not basically changed from the present system. Continued emphasis is placed on administrative management functions such as records, publications, forms, and reproduction management; reports control; and classified document control. Headquarters or office services functions such as reproduction service, mail and distribution center operations, publications and forms supply, and publications and records reference services continue to be provided at each organizational level. The changes in administrative services operations for TASTA–70 involve organization, operating procedures, and equipment utilization. These changes have a far-reaching impact on the broader scope of "Army Administration" in all operating systems.

24. Objectives

The objectives of the concepts and procedures are to—

a. Meet TASTA guidance principles of automatic data processing equipment utilization.

b. Increase responsiveness to command and unit mobility.

c. Provide the administrative operating link between the data processing activity and serviced units.

d. Reduce the number of administrative support personnel required at all levels throughout the theater.

e. Reduce hard copy records filing and processing.

25. Organization

Administrative services support in the theater is provided at three levels as shown on figure 3.

a. Major Headquarters. Each major headquarters above division level, such as Corps Support Brigade and FASCOM, includes an adjutant general's office. Under the general staff supervision of the Assistant Chief of Staff, G1, this office provides internal administrative services to the headquarters. These services include the mail and distribution center, limited reproduction facilities, and the central classified document control and repository. The adjutant general's office of Headquarters, TASCOM, FASCOM, and each mission command have the additional capability of providing a small microfilm records library for internal use.

b. Administrative Service Detachment. One detachment is assigned to each Personnel and Administration Battalion. Its mission is to provide centralized administrative services support consisting of large volume reproduction and unclassified records library services for all units located in its assigned geographical area of responsibility. Organization and concept of opeartions of the administrative service detachments are covered in paragraphs 59 through 63.

c. Personnel and Administration Center (PAC). The Administrative Services Division of the PAC is the apex of the administrative services support for the theater. It is organized into a division headquarters element and five functional branches—unclassified correspondence control; classified correspondence control; publications and reproduction; forms control; and records library. Its missions are to operate the administrative management functions throughout the theater and to provide direct administrative services support to the PAC and Theater Army Headquarters.

Note. The administrative services support provided at divisions, tactical brigades, groups, battalions, and companies is changed only as reflected in the operational concepts and procedures of this manual.

26. Operational Doctrine

Administration is accomplished on a centralized basis through combat service support units operating on a functional support basis. Administrative support is from the rear to the front, with detailed justifications and actions being accomplished at the rear service support element and summaries or specific actions for accomplishment being furnished the supported commander.

a. The supported commander requests an action, and the servicing combat service support

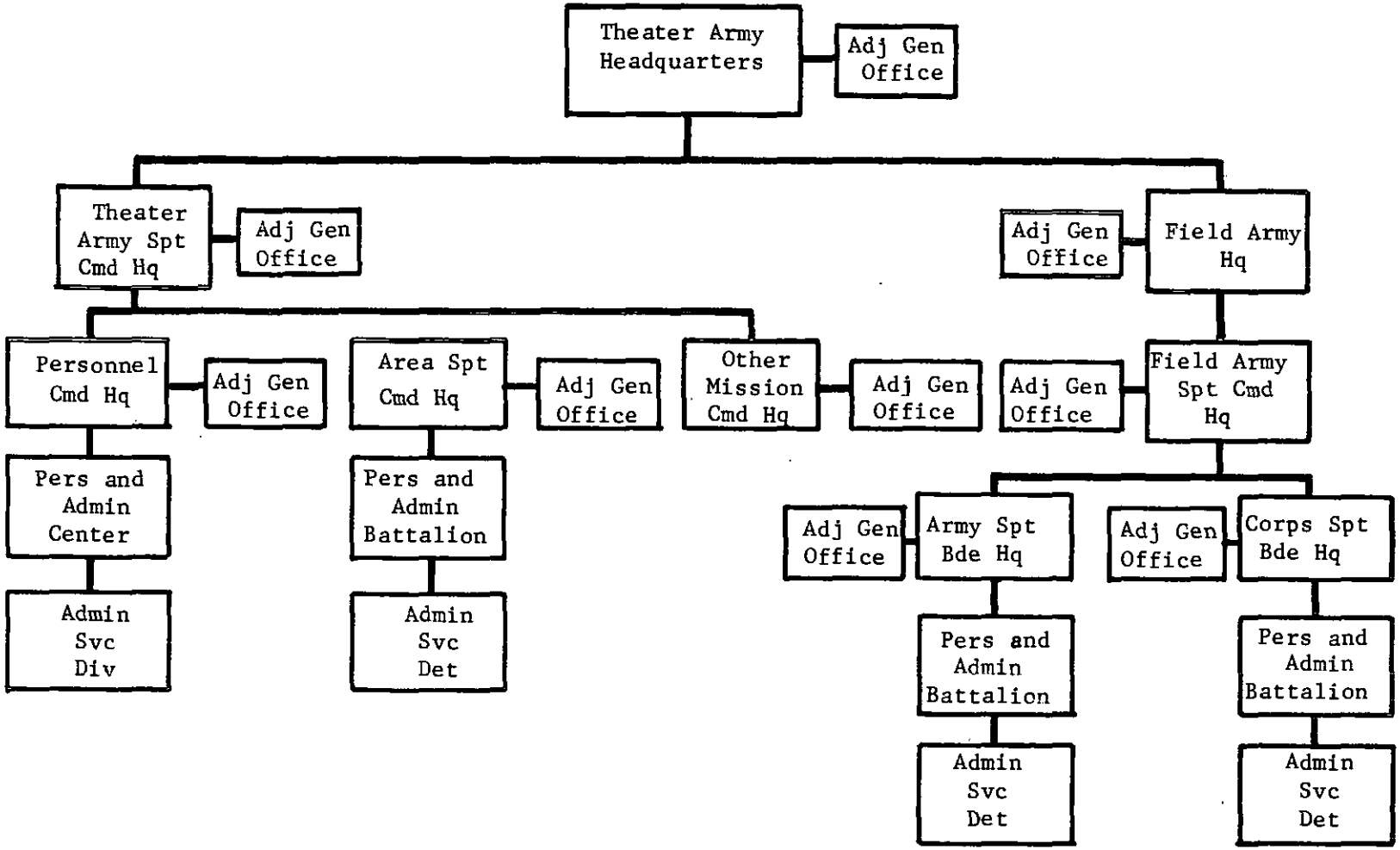

Figure 3. Administrative services organization in the theater.

unit performs the administrative procedures necessary to react to the commander's request. If necessary, the servicing combat service support unit informs the requesting unit commander of any additional actions required before final processing can be accomplished. The supported unit commander is furnished all essential backup information so that he may simply use his command prerogative of deciding "Yes or No"—"Approved or Disapproved." The objective is service to the staff and to the line.

b. Adequate communications are a paramount part of the administrative system for 1970. Each unit, company level and above, and each headquarters staff element has adequate communications to support the administrative processes required through use of organic telephone or radio channels and circuits. Improved manual or automatic switching devices are available from supporting signal units for all battalions, groups, brigades, commands, and headquarters units within the theater army. Generally, company level units are required to use the switchboard of the next higher echelons.

c. Equipment required by supported units for the administrative system for 1970 includes—

(1) Typewriter, automatic electric, solid state circuitry, 24 volt DC to 240 volt AC operation, with paper tape punch and reader and EAM card reader, complete with internal on-line electronic modem to voice telephone or radio circuits, maximum weight including case—60 pounds. This is the basic machine for source automation of the majority of data within the theater for the receipt and dispatch of all status change data, correspondence, reports, and records among units, headquarters, and combat service support units, and for input of file information to the Central Records Libraries. This machine is issued to each company-level unit (one each) and to staff elements of headquarters units based on known requirements for each specific section. It does not replace all typewriters required in all units for headquarters administration.

(2) Display unit, Video, 110 volt operation, cathode ray tube display, which holds image and permits reproduction of image into hard copy at receiving terminal, if desired with on-line electronic modem to voice telephone or radio circuits. This display unit provides direct access to the computer random access magnetic storage facility files or to Central Records Library. It is issued to headquarters staff elements of battalion, group, brigade, or other commands based on known requirements for each staff section. Selected units, such as maintenance and hospital units, may be issued similar machines with the capability to view or copy roll microfilm for reference and training. Such machines do not have the capability to transmit over communications nets when operated for these purposes.

d. Files system for elements of the theater are responsible for—

(1) Equipping all units, staff sections, and headquarters throughout the theater with source automation devices, coupled with fast and adequate communications circuits and channels, provides each commander the means to receive unclassified information quickly and to dispatch actions direct to a specific addressee within a headquarters or unit without involving hard copy processing through administrative message centers. Command and staff reaction time to a commander's request has been considerably reduced; no action request normally takes longer than 24 hours to process before the requesting commander or staff officer has been appropriately advised concerning the subject action.

(2) Unit, Staff Section, and Headquarters Files—

(*a*) The requirement to maintain voluminous files at company, battalion, group, brigade, and other higher headquarters levels is eliminated. Combat service support units re-

ceive information for updating programs and plans maintained in a computer center or other automated device on a regularly scheduled reporting basis through the medium of automatic tape/card typewriters located at each reporting source. Each automatic tape/card typewriter provides a daily punched paper tape record of the transactions for both the dispatching and receiving units. This tape represents a correspondence file for any unit, staff section, or headquarters. The daily transaction file (punched paper tape record) for each automatic tape/card typewriter is retained a maximum of 30 days and then destroyed by burning.

(*b*) Units, staff sections, and headquarters are authorized to retain hard copies of regulations, directives, manuals, standing operating procedures, and similar material which are required for their mission. Staff sections and headquarters do not need to retain copies of all regulations, directives, manuals, or standing operating procedures which have previously been furnished the Central Records Library. Company level units retain manuals and standing operating procedures when required for continuous use within the unit. Regulations and directives not contained in manuals or standing operating procedures and which apply to company administration will be obtained on a "when required basis" from the Central Records Library by direct communication from company to the library or through the use of higher headquarters video display devices. If hard copy is obtained, it will be destroyed after it has served the purpose for which reproduced; if data is again required at a later date, a request to the library will provide the same or updated file information.

(3) The supporting Central Records Library is the designated repository for file information to be retained beyond 30 days for any unit, staff section, or headquarters within the theater.

27. Information Flow

Information requirements at all levels in the theater and the sources of this information are changed. These requirements are currently being developed in the respective functional derivative studies in support of the Automatic Data Systems within the Army in the Field (ADSAF Implementation Plan). Figure 4 depicts the general combat service support information flow in the division. This is applicable at all levels in the theater. The interjection of centralized mechanized or electronic data processing capabilities provides many recognized advantages such as faster responsiveness, current data, and reduced administrative workload at subordinate levels. The manual preparation and processing of reports and the allied manual statistical record keeping functions are reduced or eliminated in the various systems. For example, the personnel records keeping system planned for this period eliminates the requirement for the daily unit morning report and the maintenance of hard copy personnel records. Units submit only change data directly to the servicing personnel activity or the data processing activity for entry into the system. Summary reports, records updating, and other actions are accomplished at the central data processing activity.

28. Central Records Library Operations

The Central Records Library serves two purposes. First, it provides a central repository for the record copy of unclassified publications and records or files created and received by the headquarters and units serviced. Second, it provides responsive information retrieval of those documents maintained on file. This system enhances the records management program, eliminates voluminous hard copy records maintenance activities in headquarters staff sections and units including personnel and equipment,

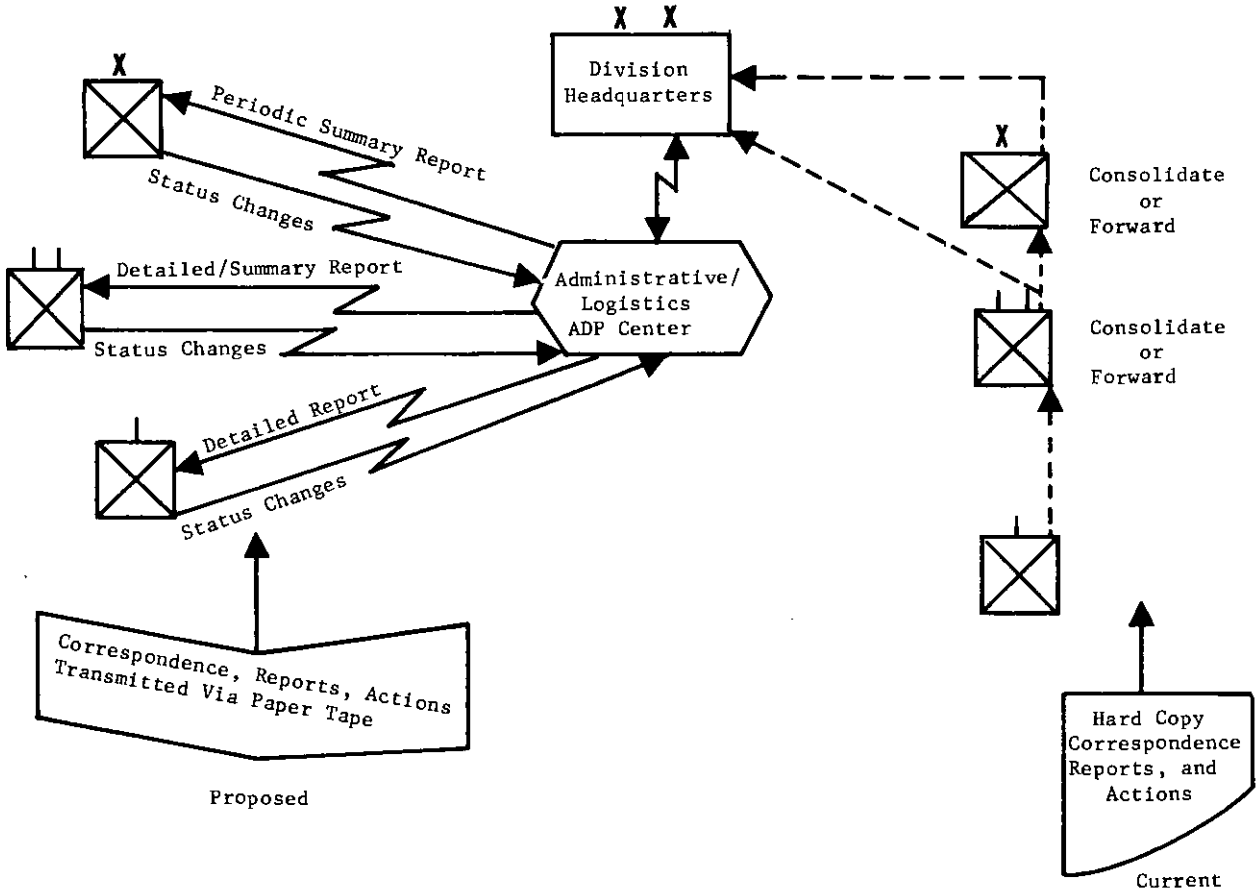

Figure 4. Information flow in the division.

and capitalizes on automatic data processing and microfilm technology. Figure 5 indicates the location of records libraries in the theater and the organizations serviced by them.

a. General Policies. Information transmitted to the library is limited to publications, correspondence, messages, and reports that have value beyond a 30-day retention period. Change of status reports that update or are a part of an automatic data processing system are not routinely included in the library file. Those documents that meet the 30-day retention requirement are normally transferred to the library at time of dispatch or receipt. Records disposition standards are established as follows:

(1) 30 days—headquarters staff section or unit to library or destroyed.

(2) Six months—library, e.g. at Corps Support Brigade, to the Theater Army Central Records Library or destroyed.

(3) One year—Theater Army Central Records Library to CONUS Records Center or destroyed.

b. Format Requirements. An exacting format for all documents entering this system is required to facilitate automated processing. Figure 6 shows an example of a format. The heading description is required to permit indexing, storage, and retrieval of that document from magnetic or microfilm storage. Each item is described as follows:

(1) The originating unit identification code (six characters) would be unique to each unit. This code would be the same or similar to unit identification code established in AR 18–50.

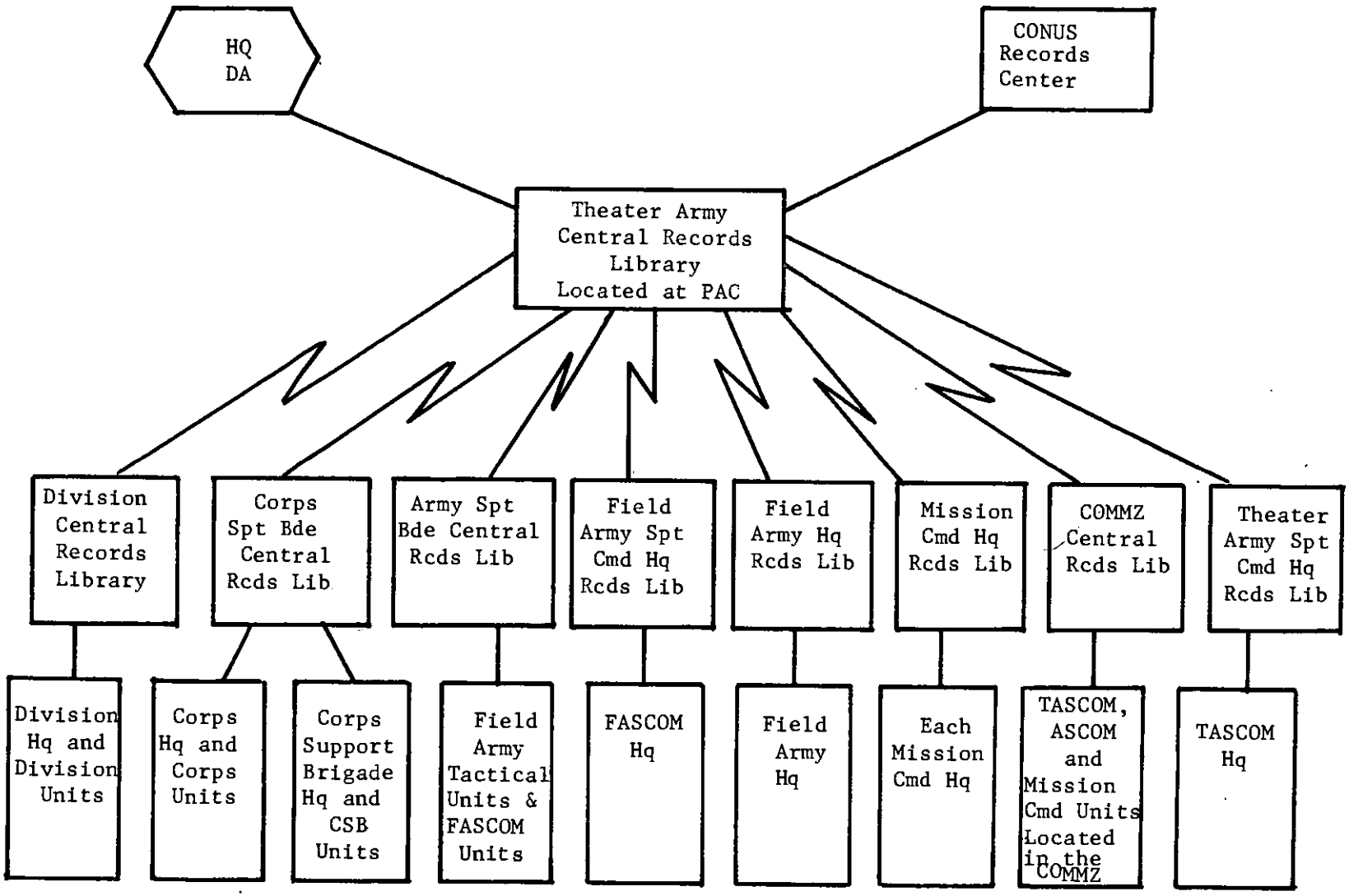

Figure 5. Central records libraries.

HEADING DESCRIPTION

ORIGINATING UNIT IDENTIFICATION CODE	SECTION SYMBOL	JULIAN DATE	DOCUMENT CODE	DISPOSITION CODE
XXXXXX	XXXXXX	XXXX	XXXXX	XX

AUTHENTICATION	TO ADDRESSEE-CODE	SUBJECT DESCRIPTORS	
XXXXXXXXXXXXXXXXXXXX	XXXXXXXXXXXX	XXXXXXXXXX	XXXXXXXXXXX
XXXXXXXXXXXX	XXXXXXXXXXXX	XXXXXXXXXX	XXXXXXXXXXX
XXXXXXXXXXX	XXXXXXXXXXXX	XXXXXXXXXX	XXXXXXXXXXX

PAGE OF XXX XXX

FREE TEXT OF DOCUMENT

1. — — —

   a. — — —
   b. — — —

2. — — —

SECOND AND SUCCEEDING PAGES

PAGE OF XXX XXX

FREE TEXT OF DOCUMENT CONTINUED

3. — — —

   a. — — —
   b. — — —

4. — — —

Figure 6. Document format.

(2) The section symbol (six characters) is similar to the current file symbol to represent the staff element of that headquarters.

(3) The julian date (four characters) is currently used.

(4) The document code (five characters) indicates the type of document such as letter, message, circular, regulation, and whether it is of policy nature or an individual action, or report.

(5) Disposition code (two characters) shows the required retention period by the originator and addresses. This

determination is made by the originator.

(6) *Authentication* (20 characters) lists the responsible individual at the originating headquarters staff element.

(7) To addressees (ten characters) code indicates the specific addresses of that document or the general distribution made by a predetermined formula.

(8) Subject descriptors (ten ten-character words) are used in indexing and retrieval of a particular document by subject content only. Authorized descriptors words are published in a dictionary.

(9) Page of X pages (six characters) indicates the page number and the total number of pages in that document. The free text is the body of the document that contains the message. It follows the current format procedures.

c. Technical Design Criteria. Several alternatives are available in developing the operations of the library to perform the functions described above. Generally speaking, they are digital data storage, microfilm storage, or a combination of both. The latter was selected to provide a more flexible capability. The majority of hard copy printed matter can be stored in digital or microfilm form for random access, responsive retrieval. Diagrams, pictures, and maps for example can be more easily stored in microfilm form, but it would not be economically feasible to store voluminous reports or field manuals in magnetic form. The volume of documents processed and stored is another important consideration. Smaller headquarters microfilm libraries, such as FASCOM Headquarters, are provided to furnish direct support to that headquarters. This is based on the size of the headquarters and estimated volume. Further system design is required to develop indexing methods such as a dictionary of approved subject descriptors and computer information retrieval software to provide the location of the document in microfilm file or for retrieval of the document itself from magnetic storage.

29. Administrative Management Procedures

The changes in procedures and responsibilities for administrative management functions are outlined below:

a. Records Management. The apex of the records management program in the theater is in the library branch of the administrative services division, PAC, Personnel Command. Department of the Army directives are expanded as necessary by this branch to insure complete guidance and implementation of the program throughout the theater. Since this branch is also operating the central theater repository for file information relayed from subordinate libraries, it is able to monitor the effectiveness of the system. Records management officers are designated at each subordinate central records library (Administrative Services Detachment) to monitor and control the library files and provide guidance to all serviced units. Emphasis is also placed on records management by administrative services officers at major headquarters. They may operate a small library, such as at FASCOM Headquarters, provide liaison with the Administrative Services Detachment, and provide technical assistance to other staff elements of the headquarters.

b. Reports Suspense and Forms Control. The Reports Suspense and Forms Control Branch of the Administrative Services Division, PAC, is the single point within the theater that has the ability to search, locate, prescribe, and approve all local forms used on a recurring basis by any unit within the theater. Requests for new reports are forwarded to the ACofS, Comptroller, of the appropriate command for approval. The majority of recurring reports for major commands and the theater headquarters are computer generated and controlled by the respective systems. Units submitting source data information to higher echelons for reporting purposes will not be required to duplicate this information in separate, similar reports. The Reports Suspense and Forms Control Branch, PAC, maintains detailed information in magnetic storage of each program, recurring report, and form which is submitted by or available at all computer complexes in the theater.

A request from a unit or headquarters for a new reporting requirement or form upon which a report is to be made is reviewed and a search is made of existing reports which pertain to the same information, frequency, and as-of dates or periods covered. If the same information exists in current programs or reports, the precise location of this information is furnished the ACofS, Comptroller for appropriate action and the originator is notified. The initial requesting unit or headquarters then initiates a direct requirement on its servicing computer center to obtain the report. If the new report or form does not exist in the current system and meets established criteria such as genuine need, economic feasibility, theater or command wide application, and improved efficiency of that system, it is normally approved by the appropriate ACofS, Comptroller and implemented at the appropriate command level. Administrative services officers at major headquarters maintain similar detailed information in magnetic storage for those reports, programs, and forms pertaining to the command concerned. The administrative services officer maintains liaison with supporting computer centers and the Administrative Services Detachment (library) to effectively monitor reports and forms and to provide technical assistance to the headquarters staff.

c. Classified Document Control. There are no major procedural changes in the control, processing, distribution, and accounting for classified material.

d. Publications and Reproductions Management. Continued emphasis is placed on reducing the proliferation of unnecessary paper at each command level. The publications and blank forms production and distribution system is outlined below.

30. CONUS Publications

a. The majority of publications originating from CONUS are distributed by the pinpoint method. These include field manuals, pamphlets, technical manuals, and other publications that would not be further elaborated on by the major commands for implementation. Those publications, primarily concerning administrative policy such as regulations and circulars, that may require additional major command policy and procedural guidance are distributed by a modified command method. The emphasis is to reduce the volume of publications and the proliferation of major command supporting publications normally required to clarify the basic Headquarters, Department of the Army policies and procedures. Distribution of technical and maintenance publications with component parts of equipment under the provisions of AR 700–70 remains unchanged.

b. The modified command distribution method requires two basic changes from present procedures. Advance copies of prepared publications will be sent to major commander furnishing the approximate date of distribution and directing submission of additional text material which will be required in order to implement provisions of the publication within command. Such additional material may be in the form of additions to existing paragraphs or additional paragraphs. Major commands requiring additions to the basic directive will be furnished a limited quantity of the publications for the addition of the commands instructions to the basic publication. The major command then reproduces the publication in the quantity required and distributes it to subordinate organizations by the command method. If it is determined by the major commander that additional instructions are not required, the publication is distributed to all units by the pinpoint method.

c. The present procedure of using the DA Form 12-series "subscription forms" is extended to cover the majority of publications.

d. Additionally, copies of all Department of the Army publications and blank forms are furnished the Theater Central Records Library and other central records libraries in the theater on microfilm or on magnetic form for reference purposes as outlined above.

31. Theater Publications

All theater publications are distributed by the command method. Formulas for distribution are developed by each headquarters issuing publications.

32. CONUS Blank Forms

a. Blank forms from CONUS are distributed by pinpoint distribution. Arrangements for the application of the pinpoint method of distribution to blank forms include—(1) creation of package of assorted blank forms; (2) identification of the blank forms which cannot be sent through APO channels due to high usage rates or size; (3) establishment of a system through which these nonmailable blank forms can be shipped to using units.

b. Creation of packages of blank forms is accomplished from known requirements. The CONUS publications center, from these known requirements, establishes a number of packages, each containing a specified assortment of blank forms. For example, one standard assortment package of blank forms is established for a company level unit of an infantry battalion.

c. The assortment of blank forms, which normally consists of a 30-day supply for the unit for which it is intended, is mailed on a schedule based on the mailing time to the unit (fig. 7). The schedule is established to have the supply of forms arrive at the unit at approximately the time its supply-on-hand is depleted. Units may require the servicing publications center to change the mailing cycle to avoid a building up of more than 30 day's usage of forms. (For example, this could happen when the cyclic resupply reaches the unit far in advance of the schedule, perhaps due to a speed up in the mailing time to the unit.) There is no need for resupply requests since the resupply is automatic. Units go direct to the publications center by DA Form 17 (Requisition for Publications and Blank Forms) to obtain blank forms not included in the normal assortment they receive.

d. Those blank forms which cannot be sent through the mail are identified in the process of the creation of assortment packages. Among such forms are punched cards for data processing systems, which are used at a very rapid rate, and all forms which cannot be packaged to meet U.S. Post Office regulations. Some of the latter forms may be associated with data processing activities. These forms are shipped through transportation channels to the using units. Automatic resupply requirements for

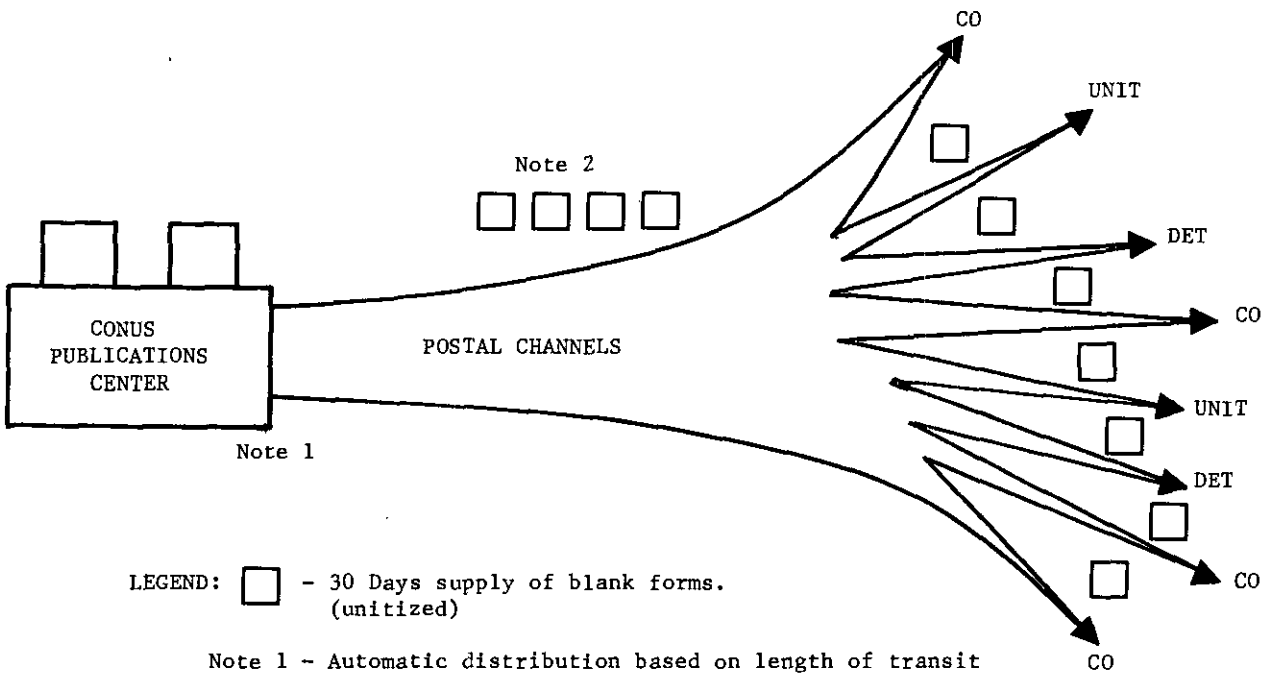

Figure 7. Pinpoint distribution of blank forms.

such forms are established for data processing units, supply depots, and other high-usage units in the same manner as the company-size assortment of blank forms is created. The normal transport time from the publications center to the unit is considered in establishing the initial supply of forms furnished by this system. Each unit is furnished a 10-week supply, and thereafter a cyclic schedule is established to furnish the forms so as to have the resupply reach the unit approximately at the time the supply on hand is depleted. Units may require the publications centers to change the scheduled cycle as necessary; e.g., when, for one reason or another, a cyclic resupply reaches the unit far in advance of the schedule, causing an oversupply of forms.

e. The most appropriate container for these items is a CONEX container, which may be kept by the receiving unit as a storage facility for its contents. When a CONEX container is loaded with boxes of blank forms for several units (which will occur when postal restrictions require shipment through transportation channels), it is shipped to the servicing supply support unit. From that point the individual boxes are forwarded unopened to the requesting units. The CONEX container remains at the distributing location until emptied, whereupon it is released to the supply system.

f. Stockpiling of blank forms in the theater is greatly reduced. With the exception of data processing activities requirements, the sophisticated, multicopy, set forms are reduced or eliminated. If units require resupply of cutsheet or card blank forms on an emergency basis, the servicing administration services detachment or administration company (division) has the authority and capability to locally reproduce the limited quantity required until normal resupply can be obtained from CONUS.

g. The Theater Publications Control Office maintains liaison with the publications centers in order to maintain an efficient distribution system for both publications and blank forms.

33. Theater Blank Forms

All theater blank forms are locally reproducible and are distributed by command distribution. Since they are locally reproducible, resupply requirements are projected to be insignificant.

34. Theater Reproduction

Two types of copying machines—one which cuts stencils automatically and is used with a mimeograph machine and one which produces paper offset masters used by bench or small floor model offset machines—increases the reproduction capability of units in the theater. Each unit having duplicating equipment in its TOE is furnished the appropriate type of machine to increase the efficiency of the reproduction process by producing error-free stencils or offset masters automatically, freeing typists from this task. It requires no special skills to operate. It allows all units to locally reproduce theater publications and blank forms with little or no effort.

a. Units having this equipment provide for reproduction of theater blank forms and publications for subordinate and satellited units which do not have this capability.

b. In addition to the increased reproduction capability and self-sufficiency of units provided by the addition of copying machines, the theater administrative service detachments are equipped to handle reproduction tasks above the capability of the units. Each unit reproducing publications is required to use its reproduction capability to the maximum before requesting support.

c. Administrative services detachments or administration companies (division) are authorized to reproduce Department of the Army publications and blank forms when required.

Section VI. POSTAL

35. General

The military postal system of the TASTA–70 time period is evolutionary in character. It retains those features of the current system which are compatible with TASTA–70 guidelines and discards or revises those which are not. This section contains a detailed description of the TASTA–70 postal system to include responsi-

bilities, organization, operation, mission, functions, tasks of each organization, and command relationships. Where appropriate comparisons are made between the different aspects of the current system and the proposed system with the rationale, justification, implications, and benefits of changes being described.

36. Responsibilities

a. General. Military postal service continues to be a responsibility of command at all levels. Pursuant to this principle, the military postal system continues to be administered by each service to support its particular requirements subject to the terms of the postal agreement, with conflicts between the services or between the military and U.S. Post Office Department being resolved by coordination between the Department of Defense and the U.S. Post Office Department.

b. Headquarters Department of the Army. At the service level, Headquarters Department of the Army continues to be responsible for postal administration, operation, technical control, inspections, and investigations of crimes committed against the postal service within the army.

c. Headquarters Army-Air Force Postal Service.

(1) Headquarters Department of the Army discharges the responsibilities described above by operating with the Air Force a joint Army-Air Force Postal Service. Administrative supervision of this service remains a responsibility of The Adjutant General of the Army.

(2) Headquarters Army-Air Force Postal Service performs its mission of administering, supervising, and coordinating postal activities of the Army and the Air Force, and generates worldwide policies relative to postal operations. Responsibility for the execution of these policies remains with the commander in the field.

d. Oversea Commands. The Theater Commander is responsible for the overall operation of the postal system within his command. He is assisted in exercising this responsibility by—

(1) The Theater Assistant Chief of Staff for Personnel, who has general staff supervisory responsibility for postal service in the command.

(2) The Theater Assistant Chief of Staff for Logistics, who has general staff responsibility for logistical support.

(3) The other major subordinate commanders who—

(*a*) Command postal operating elements located in their respective areas.

(*b*) Provide administrative and logistical support to postal operating elements.

e. Theater Staff Postal Officer. The Theater Staff Postal Officer is a member of the staff of the Personnel and Administration Center, Personnel Command. His specific responsibilities are the same as those of the current Theater Staff Postal Officer. In general, the Theater Staff Postal Officer is responsible for—

(1) Providing technical advice on postal operations to the PAC and the Theater Army Commander.

(2) Exercising technical control over and coordinating the activities of all postal operating elements in the theater.

f. Personnel Command, TASCOM. The Personnel Command commander is responsible for exercising operational control over all general support postal operating elements in the theater. He is assisted in exercising these responsibilities by the—

(1) Assistant Chief of Staff, Personnel, who has general staff supervisory responsibilities.

(2) Postal Company Commander, who is responsible for providing general service in the theater.

g. The Field Army. The field army commander is responsible for internal postal service within his command, subject to policies and procedures established by the Theater Army Commander.

(1) *The FASCOM.* The Assistant Chief of Staff Personnel, has general staff responsibilities.

(2) The Personnel and Administration Battalion Commander of each Army/Corps Support Brigade supervises the operation of direct support operations in the FASCOM.

h. Analysis of Changes between Current and Proposed Administrative Concepts. A significant change in staff and organization responsibilities has been made in the administration of the Theater Postal System.

(1) *Staff postal officer.* In the current system the Theater Staff Postal Officer is a member of the Headquarters Theater Army Staff. Normally, he serves on the staff of the Theater Army Adjutant General. In the TASTA–70 organization, he is integrated into the PAC. The position of staff postal officer in subordinate commands down to division level has been eliminated. Duties formerly performed by this individual are executed by either the theater staff postal officer (audits and inspections) or the appropriate P&A Battalion APO commander (staff advisory functions).

(2) Staff postal officers are not required at subordinate command headquarters in view of the realignment of responsibilities and functions within the military postal organization. Implications and benefits of this are—

(*a*) Elimination of the Theater Staff Postal Officer from Headquarters, Theater Army reduces the administrative burden of the Theater Army Headquarters.

(*b*) Establishment of the position of Theater Staff Postal Officer at PAC level places the function in the hands of the commander responsible for the Theater-army-wide operation of the system and at the same level as all other theater-army-wide personnel and administrative support services.

37. Organization and Operation of the System

a. General. During the TASTA–70 time period the military postal system continues to concern itself with extending appropriate services of the United States Post Office Department to military and certain other personnel and activities in oversea commands. To accomplish this mission, the system is divided into two basic components: the U.S. Civil Postal System operated by the U.S. Post Office Department and the Theater Postal System operated by the military establishment.

b. U.S. Civil Postal System. The organization, operation, and administration of the Civil Postal System is the sole responsibility of the USPOD, and is therefore outside the scope of this study.

c. Theater Postal System. The oversea Theater Postal System is operated by the military establishment. The Army meets its postal responsibilities by operating a system of general support and direct support postal elements.

(1) *General support elements.* General support postal elements are those units which exist solely to operate facilities which provide support to other postal activities. Included in this category are the following:

(*a*) Mail terminals. (CONUS).

(*b*) In transit regulating terminals.

(*c*) Central directory.

(*d*) Postal finance and supply depots.

(2) *Direct support elements.* Direct support postal elements are those activities which operate facilities providing postal support to individuals and organizations of the Army (other than postal elements). This is accomplished by operating Army Post Offices (APOs) in areas of high troop density and in other areas where the service is required. APOs provide—

(*a*) Mail distribution and dispatch for individuals and organizations.

(*b*) Complete postal financial service (money order sales and redemption, stamps, stamped paper, and accountable mailing services) for individuals and activities.

d. Concept of Operations.

(1) *General support postal operations.* The Personnel Command is responsible for

general support postal operations. The general support postal company is assigned to the Personnel Command. The component elements of the company are operationally controlled by the company regardless of their location. Although the scope of the operation, the type of conflict, the geographical situation and transportation resources are the governing factors in determining the mix and establishment of a postal company, it is generally tailored to perform either mail flow functions along the lines of communications (LOC) or other general support activities such as postal finance and supply depot operations or directory operations.

(*a*) *Mail processing activities.* The term "Mail processing activities" covers those activities required to move mail from ports of entry to the APO of address, and to dispatch mail from the APO of address to the port terminal. It is envisioned that there will be one or more mail terminals and in transit regulating terminals along each LOC.

(*b*) *Other general support activities.* In addition to those postal units performing mail processing tasks along the LOC, there is another unit which performs tasks relative to postal finance and supply depot operations and directory service. This unit is composed of a headquarters element for command and control purposes, a postal finance and supply team for depot operations, a directory team (or teams) for directory operations, and a mail processing team to handle mail flow into and out of the mail directory. All elements of this unit are normally located in the area of the PAC.

(2) *Direct support postal operations.* Direct support postal operations are provided on an area basis. In the COMMZ there is an APO assigned to each area support group. In the field army a variable number of APOs are assigned to each P&A Battalion of a support brigade. Each APO is normally composed of a headquarters team, one mail processing distribution team, and three to seven postal finance teams.

e. Comparison of Current and TASTA–70 Organizations. The TASTA–70 organization differs significantly from the current organization in that—

(1) Current organizations (postal regulating detachment, base post office, army postal unit) have been eliminated, and a single Postal Service Organization substituted.

(2) TASTA–70 organizational philosophy establishes the postal company as the basic operating element, whereas currently a variety of specialized organizations exist.

(3) General support and direct support functions are clearly defined in the TASTA–70 organization, whereas in the current organizations these differentiations are merely implied or in some circumstances combined.

f. Distribution and Routing of Mail.

(1) *Incoming letter mail to the theater.* Letters from CONUS addressed to personnel overseas are to be massed at appropriate civil post office postal concentration centers located at designated CONUS gateways. They are sorted by company or similar sized units or other separate elements, combined into parent battalion or comparable organization packages, placed in lightweight mail pouches, and dispatched to oversea mail terminals. Oversea mail terminals secure necessary lift for onward movement of mail and route it to the Army Post Office serving the unit of address. Battalion mail clerks collect mail from the APO and distribute company sorts to company mail clerks for delivery to addressees. Thus, pouching of mail by units minimizes requirements for processing of letters at intermediate points, which are bypassed whenever

possible. If the situation permits, mail is flown via available airlift direct from mail terminals to units of address.

(2) *Outgoing letter mail from theater.* Letter mail outbound from the theater is deposited by unit mail clerks at the nearest postal facility. This mail is faced, canceled, and forwarded to the mail terminals. Mail terminals secure the necessary onward transportation and ship the mail to CONUS. Sorting of mail by states and cities is accomplished in CONUS at designated postal facilities. Intratheater mail is sorted at APO level for proper distribution.

(3) *Official mail.* Most random mailings of official mail are handled in the same manner as personal mail. An exception is "source to user shipment," wherein CONUS depots ship direct to air terminals for onward shipment to the requisitioner. Since this procedure bypasses the postal concentration center, it represents an exception to the normal flow of mail from CONUS.

(4) *Disposition of undeliverable mail.* A central postal directory is established at the PAC, Personnel Command, TASCOM, to provide organization and individual locator service. These functions are performed by a central postal directory team assigned to a postal company.

(*a*) *Organizational locator service.* The frequent abrupt movement of units within the theater make it mandatory that timely information be available to postal activities relative to the APO which is serving them. Based on information available from the PAC, the locator team compiles the mail distribution scheme and distributes it on a weekly basis to all operating agencies of the theater postal system and to the U.S. Army military mail terminals in the CONUS.

(*b*) *Individual locator service.* Mail undeliverable at unit level will be forwarded by the unit mail clerk to the central postal locator situated at the PAC without further recourse to intermediate directory actions. All casualty mail is forwarded for directory action regardless of information available at the unit.

(5) *Special considerations for disposing of mass casualty mail.* Mass casualties within an oversea theater of operation present a unique problem for the postal system. Procedures for disposing of mass casualty mail are as stated in (6) below.

(6) *Diversion of mail at PCC.* Whenever possible mail addressed to organizations suffering mass casualties should be diverted at the CONUS Postal Concentration Center (PCC). Upon notification of a mass casualty loss within the theater the central postal locator electronically transmits a hold on the affected unit's mail to the PCC. The PCC diverts and retains mail for that unit pending disposition instructions from the theater central postal locator. Subsequent instructions by the theater central postal locator consist of a roster of personnel for whom mail is to be returned to sender and personnel for whom mail is to be forwarded.

(7) *Diversion of mail in the theater.* Upon notification of a mass casualty loss, central postal locator immediately notifies the appropriate servicing postal activities. These activities locate and divert the unit's mail directly to the central postal locator where final disposition action is taken.

(8) *Censorship.* The censorship of military and PW mail is a responsibility of the Army Intelligence and Security (AIS) service. The postal service is responsible for providing facilities at postal installations for censorship activities of the AIS.

(9) *Prisoner of war mail.* Mail for PW's held by the U.S. and mail for enemy-held American personnel is exchanged through neutral countries in coordination with the International Committee of the Red Cross.

Section VII. SPECIAL SERVICES

38. General

a. The present system for provision of special services to troops in the field under peace conditions will continue during the 1965–70 time frame for peace time operations.

b. For combat operations, periodic withdrawal of units from the front to a rear area for rest, regroupment, and retraining is envisioned. It is during this period of withdrawal from the line that special services provides its major contribution, helping to relieve tensions accumulated on the battlefield. Company, battalion, brigade, and group trains will have limited amounts of group type special services equipment and supplies; in addition, the division special services activity will provide technical assistance and supervisory help to these units on a scheduled basis. Most group type special services supplies and equipment in the division area of operations will be of a type which can be used by self-organized groups of personnel, notably in the sports field.

c. In addition, while units are on the line the soldier will be furnished individual self-help special services supplies such as pocket reading books, pocket games, and possibly even pocket radios.

d. Combat divisions normally will establish some type of rest area within the division area of operations, dependent upon combat operations during any specific period of time. A special services detachment services team (8 men) operates the division rest area, whether in the corps area or in division area of operations, with minimum equipment and supplies to assist in self-help sports, games, and projects. Brigades may establish a "water hole" type of rest or recreational camp for brigade units which operate in close proximity with the bath and clothing exchange elements. The division rest area provides minimum facilities for not more than 750 personnel at any one time with input from unit-size elements, i.e., squads, platoons, or companies. Units provide their own commanders for control of personnel using the rest area, provide their own bedding and tents, and consume the combat ration. Group type special services equipment and supplies are furnished by the division.

e. In the Corps and Army areas, similar rest areas are established by special services teams operating under the control of the Support Brigade special services activity. Each support brigade area provides a maximum of eight such rest areas, which operate in close proximity with the bath and clothing exchange elements. Units provide their own commanders for control of personnel as well as individual bedding and tentage; personnel consume combat rations provided operating units in the corps or army area.

f. In the communications zone, rest areas are established by special services teams operating under the control of the area support group commander. Rest areas in the communications zone are used primarily by combat and combat support units assigned for rear area defense or theater reserve functions and stationed in the group area. Rest areas may also be used by combat service support units when the need is recognized by the major commander of these units. Rest areas in the communications zone are operated similarly to those in the FASCOM support brigade areas.

g. Also in the communications zone, the Special Services Company, Personnel Command, establishes and operates leave and recreation centers designed to service from 250 to 750 members of the armed forces. Command, control, and supervision of activities at each center is a function of the special services detachment of the Special Services Company. The commander of the area support group in which a center is established provides support services for the center. A maximum of 12 centers is established for a one field army theater or 12-division force. It is planned that a maximum of 5 percent of the theater army strength will be at leave and recreation centers or en route to or from such centers at any one time. A maximum of 5 days is authorized individuals at such centers with up to 4 days travel time or a maximum of 9 days any one individual should be absent from his unit for leave and recreation purposes of this type in a year. Leave and recreation

centers are also established, within the maximum discussed above, at medical centers. Personnel placed on convalescence leave by medical authorities are not authorized additional absences from the unit until they have completed another complete cycle since last leave of absence. Leave and recreation centers provide bedding, billets, and food service. As a part of the overall center complex, a suitable area is provided for Chaplain activities in the form of a Retreat Center for interested lay personnel who prefer this type of leave and recreation in lieu of that provided by special services. Provision is made for personnel using the Retreat Center to engage in special services activities operated or supervised by the leave and recreation center; and personnel using the special services leave and recreation center may also engage in religious activities of the Retreat Center at their option.

39. Organization

a. The staffing of special services staff elements in an oversea theater is the same in peace or war, but the supporting special services organizations change.

(1) During peacetime operations special services support is furnished by post, camp, or station facilities (TD units) and includes bowling alleys, libraries, and service clubs, operated primarily by civilian personnel.

(2) During combat conditions special services support is furnished by TOE special services units operating rest areas and recreation and leave centers. However, if combat conditions permit, post, camp or station facilities operated by civilian personnel may be established.

b. In a theater of operations, special services elements are located within the following commands:

(1) Headquarters, Theater Army Support Command (TASCOM).

(2) Personnel and Administration Center, Personnel Command.

(3) Area Support Group, ASCOM.

(4) Field Army Support Command (FASCOM).

(5) Personnel and Administration Battalion, Corps and Army Support Brigades, FASCOM.

(6) Combat Divisions.

c. The Special Services Division, Personnel and Administration Center, Personnel Command, TASCOM, functions as the Theater Army Special Services element and exercises technical control over all special services activities in the theater army.

d. The staffing of the theater of operations special services elements is based on total function perform at each level, viz—

(1) Hq TASCOM: Small administrative staff.

(2) Personnel and Administration Center, Personnel Command: Large administrative and operational staff.

(3) Area Support Group, TASCOM: Medium administrative and operational staff.

(4) Field Army Support Command: Small administrative staff.

(5) Personnel and Administration Battalion, Corps and Army Support Brigades: Medium administrative and operational staff.

(6) Combat Divisions: Small administrative and operational staff.

40. Operational Doctrine

a. Headquarters, Department of the Army continues to mail paperbound books, phonograph recordings, and selected hard-backed reading matter on a scheduled basis to all oversea units. During peacetime, such items are mailed to the major units, service clubs, and libraries. During operational combat conditions pocket books and recreational kits are mailed directly to company size units. Phonograph recordings, hard-backed books, and radios are mailed to major units, battalion size and above, for further distribution or centralized use. Paperbound books are issued at a greater consumption rate during wartime than peacetime.

b. Three categories of special services support are found in the theater of operations: (1) additional duty staff assistance at unit, battalion, brigade, and group level; (2) adminis-

trative staff for overall control of activities; and (3) administrative and operational staffs providing guidance, supervision, and technical support.

c. A special services detachment is provided for administering special services technical, supply, and supervisory support on an area-wide basis to those units not provided full-time special services support personnel. Normally, this unit operates rest areas and leave and recreational centers in both the communications zone and the field army area. The detachment is composed of a headquarters element and four services teams and can provide command, control, and special services support for a leave and recreation center of 800 individuals. For each additional 200 individuals supported at a leave and recreation center, one additional services team is required. One services team is capable of providing special services support to a unit rest area of 750 personnel.

CHAPTER 3

ADJUTANT GENERAL'S OFFICE AND DIRECT SUPPORT UNITS

Section I. ADJUTANT GENERAL'S OFFICE

41. General

The Adjutant General's Office of a major headquarters such as corps support brigade and FASCOM operates under the general staff supervision provided by the Assistant Chief of Staff, Personnel. It provides internal office management and services for the headquarters.

42. Functions

Its functions include—

a. Distribution center services.

b. Central classified document control and repository for the headquarters.

c. Publications and forms management.

d. A limited copying and reproduction facility.

e. Library service for headquarters correspondence and publications.

f. Coordination with the servicing Army post office and signal communications facility for the receipt and dispatch of official mail and messages.

g. Coordination with the supporting administrative service detachment for volume reproduction requirements and central records library services.

h. Providing assistance in and supervising the headquarters records disposition program.

i. Providing liaison with the supporting personnel and administration battalion for personnel and administrative services as required.

j. Providing technical assistance to the commander and other headquarters staff sections as required.

k. Coordination of courier service.

l. Publishing orders as required.

43. Organization and Operations

The Adjutant General's Office provides administrative support to the headquarters through its functionally organized distribution branch, classified documents branch, and operations branch, as follows:

a. The distribution branch receives all official "hard copy" correspondence addressed to the commander, determines the action requirement and information needs within the headquarters, and delivers the correspondence to the various sections of the headquarters. It also receives correspondence from the sections for distribution within the headquarters or to other commands and coordinates with the servicing army post office for external dispatch. Unclassified messages transmitted over the signal operated communications system are received from the signal communications center, actioned, suspense processed if required, and distributed to the responsible staff section. Outgoing unclassified messages are dispatched directly to the signal communications center by the originating staff section with an information copy to the distribution branch when required. All staff sections are equipped with electronic devices to aid in the receipt, preparation, and dispatch of unclassified correspondence.

b. The classified documents branch controls the flow of classified documents to and from the headquarters. Upon receipt of incoming classified documents, the branch assigns a control number and determines the action section of the headquarters. Elements of the headquarters needing classified documents on a daily basis retain the documents within their

sections. Depending upon the nature of the material, the staff section returns the document to the classified documents branch for retention or destruction when it is no longer required. Appropriate control registers, receipts, and inventories are maintained.

c. The operations branch conducts the publications and forms management and records disposition programs for the headquarters and operates input-output devices to a servicing computer center for management of the creation and disposition of forms and records. It operates equipment for limited reproduction of unclassified documents required by elements of the headquarters for internal headquarters use. Documents needing large volume duplication for external distribution are forwarded to the Administrative Service Detachment assigned to the Personnel and Administration Battalion. It also provides publications services to headquarters staff sections and office supply services to the Adjutant General's Office. Finally, the branch provides coordination and liaison with the servicing central records library in the Personnel and Administration Battalion for problem or specialized records which other headquarters staff sections are unable to retrieve directly from the library with input-output devices located in the staff sections.

Section II. PERSONNEL AND ADMINISTRATION BATTALION

44. Mission

The mission of the Personnel and Administration Battalion (P&A Bn) is to provide direct personnel, administrative, finance, and morale services support on an area basis to all nondivisional troops located in its geographical area of responsibility.

45. Assignment

A P&A Bn is assigned to each corps support brigade and the army support brigade in the FASCOM.

46. Capabilities

a. At full strength, this battalion provides the following:

(1) Direct personnel, administrative, financial, and morale (postal, special services, band) services support to the FASCOM Army/Corps support brigades and nondivisional units.

(2) Liaison with supported headquarters.

b. This unit is dependent upon other support activities for supplemental motor or air transportation, signal communications, signal maintenance of organic signal equipment, medical services, and supplemental vehicle maintenance of organic vehicles.

c. The battalion serves as a carrier unit for attached finance direct support companies.

47. Organization

The P&A Bn is a flexible organization that is normally composed of a Headquarters and Headquarters Detachment, a Personnel Service Company, an Administrative Service Detachment, an Army Band, and a variable number of Army Post Offices, Replacement Regulating Detachments, Special Services Detachments, and Finance Direct Support Companies. Figure 8 depicts a representative personnel and administration battalion.

48. Method of Operations

a. General. Personnel and administrative support, using automatic data processing equipment, is centralized at the support brigade level to provide services on an area basis for corps, army, and FASCOM units and personnel. The Support Brigade Personnel and Administration Battalion is responsible for executing the personnel and administrative policies established by the Field Army, Corps, and Support Brigade commanders.

b. Command Relationships.

(1) *Higher commands.* The Support Brigade, through the Personnel and Administration Battalion and its assigned and attached units, provides personnel, morale, and administrative support directly to the Field Army, Field Army Support Command, Corps, and Support Brigades. The personnel

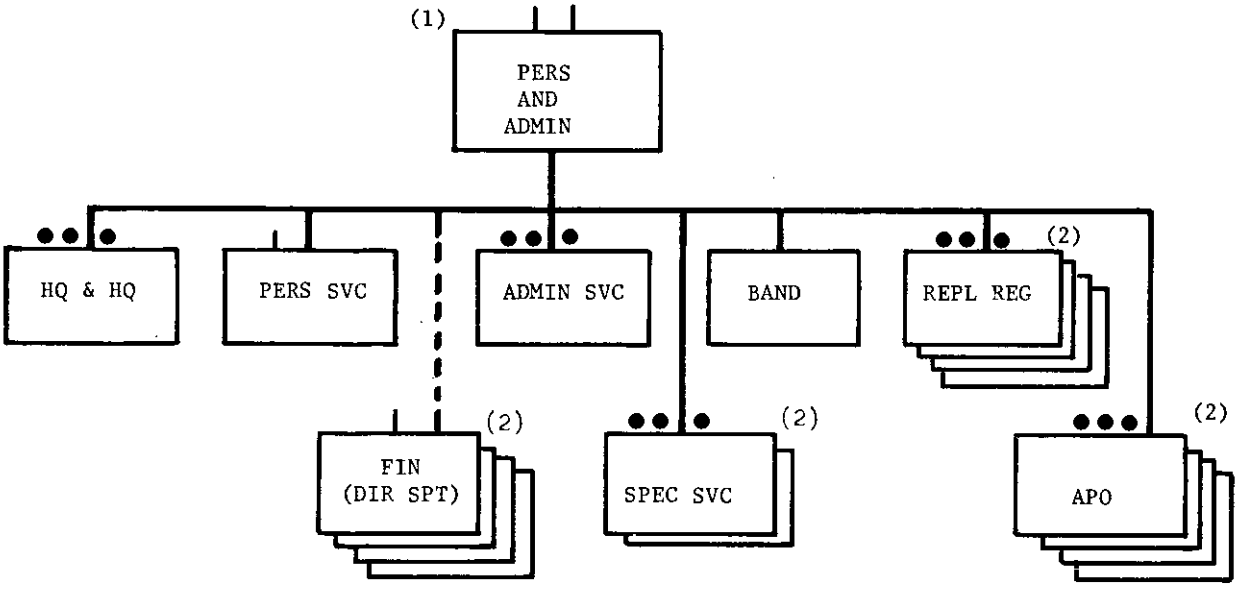

NOTES: (1) The organization with the number of subordinate units shown is a Type Personnel and Administration Battalion only.

(2) Number of units are in direct proportion to the number of troops serviced.

———— Admin/logistical support only

Figure 8. Personnel and administration battalion.

and administrative policies established by these headquarters are executed in the various commanders' names by elements of the Personnel and Administration Battalion.

(2) *Lower commands.* The Support Brigade, through the assigned P&A Bn provides personnel, morale, and administrative support directly to all nondivisional type units assigned or attached to the Corps or Field Army (as appropriate). The P&A Bn provides information on personnel or administrative matters on a scheduled basis or as required, to units served. The P&A Bn acts upon personnel and administrative requests received from units assigned to the Field Army or Corps, and Support Brigade as prescribed by the policy of the particular headquarters to which the requesting unit is assigned.

c. Operations. The P&A Bn operates the Personnel Service Center of the Support Brigade. It uses the automatic data processing equipment of the Support Brigade to maintain personnel and administrative data from which reports are furnished to all units and headquarters supported by the brigade (less division) and higher headquarters. Requests for actions on a unit or individual basis are acted upon by the P&A Bn within the policy of the respective headquarters. Exceptions to policy are directed to the headquarters establishing the policy for

action. The P&A Bn operates a central records library for the maintenance of authorized publications, correspondence, and documents created by the units and headquarters served. Finance postal, special services and band support is provided by elements of the P&A to all supported units on an area basis. The ACofS Personnel, Support Brigade, exercises operational control over the Personnel service center and units of the P&A Bn except for the finance units. Staff supervision and technical control over finance units is exercised by the ACofS Comptroller. Close liaison is established by the P&A Bn with all major headquarters being supported to facilitate communication regarding personnel and administrative policies. The P&A Bn assumes the role of the Personnel Command, TASCOM, when operating as a part of a Corps Support Command (COSCOM) for independent corps operations.

Section III. HEADQUARTERS AND HEADQUARTERS DETACHMENT, PERSONNEL AND ADMINISTRATION BATTALION

49. Mission

The mission of the headquarters and headquarters detachment of the P&A Bn is to provide command, control, staff planning, and supervision of assigned or attached units (except Finance direct support companies) which provide personnel, administrative, and morale services on an area basis to all nondivisional troops in its geographical area of responsibility of the FASCOM.

50. Assignment

This unit is assigned to the Army and Corps support brigades of the FASCOM when a P&A Bn is established.

51. Capabilities

a. At full strength the detachment provides—

(1) Command, control, and supervision of assigned or attached units except Finance direct support companies.

(2) Administrative and logistical support to assigned or attached finance units. See FM 14–3–1 (TEST).

(3) Operational staff planning for assigned or attached units.

(4) Logistical, administrative, and maintenance support or coordination for assigned or attached units.

b. The detachment is dependent on other units for medical and mess support.

c. This detachment is not adaptable to a type B organization.

52. Organization and Functions

The headquarters and headquarters detachment consists of a battalion headquarters in-

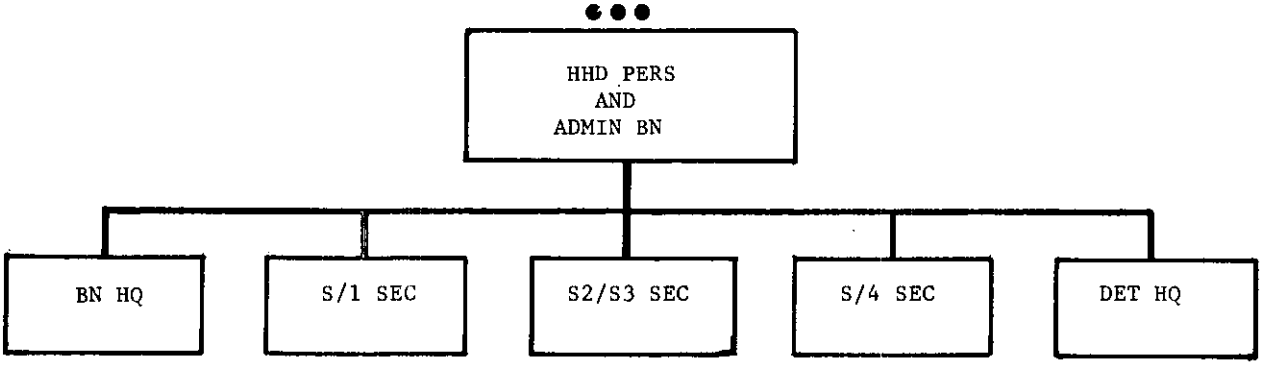

Figure 9. HHD, Personnel and Administration Battalion.

cluding an "S" type staff and a detachment headquarters as shown in figure 9. Details of the organization are shown in TOE 12–66.

a. Battalion Headquarters. The battalion headquarters provides the personnel resources for command, control, staff planning, and supervision of the battalion and its subordinate units.

b. S1 Section. This section is the principal operating staff section of the battalion. The S1—

(1) Exercises staff supervision over assigned or attached units which provide personnel, administrative, and morale services support to the units supported.

(2) Is responsible for maintenance of battalion strength, personnel management, manpower management, morale, discipline, law and order, and the internal management of the headquarters.

(3) Monitors and recommends postal procedures, coordinates mail management functions, and supervises the operation of the Army Post Offices.

(4) Monitors and recommends procedures for replacement operations, and coordinates and supervises the operations of the replacement regulating detachments.

(5) Monitors and supervises all special services recreational activities; plans and recommends requirements for special service units and personnel; and controls special service items of supply.

(6) Schedules band activities.

(7) Allocates battalion quotas for rest areas.

(8) Coordinates with the appropriate ACofS, Comptroller for finance support.

c. S2/S3 Section. This section is responsible for battalion plans, training, operations, communications, unit security, and intelligence.

d. S4 Section. This section is responsible for the supply and maintenance activities of the battalion and coordinates the support for assigned and attached units.

e. Detachment Headquarters. This section provides the routine overhead support to the battalion headquarters.

53. Method of Operations

a. General. The Headquarters and Headquarters Detachment, P&A Bn, is the operating agency for the corps/army support brigade to command, control, and supervise all direct personnel, administrative, and morale service support to units in the brigade.

b. Command Relationship.

(1) *Higher commands.* It functions as the nucleus of the Personnel Service Center which is under the operational control of the ACofS, Personnel, Army/Corps Support Brigade.

(2) *Lower commands.* Normal command relationships exist except that the detachment does not normally become involved in technical or administrative communication channels of its subordinate units involving submission of reports, information, or data to higher, lower, or parallel commands inherent in routine operations.

Section IV. PERSONNEL SERVICE COMPANY

54. Mission

The personnel service company acts as the custodian of and maintains individual military command personnel records and provides centralized personnel management and actions support which are attendant upon this responsibility. These services include those which satisfy the personnel requirements of the individual as well as those which the commanders being supported need to permit them to discharge their personnel management responsibilities.

55. Assignment

A personnel service company is assigned to the personnel and administration battalion of the Army/Corps Support Brigade, FASCOM.

56. Capabilities

a. Personnel service companies are of eight types and are designed to accomplish their mission for the troop strength supported as follows:

(1) Type A—2,500–7,499
(2) Type B—7,500–12,499
(3) Type C—12,500–17,499
(4) Type D—17,500–22,499
(5) Type E—22,500–27,499
(6) Type F—27,500–32,499
(7) Type G—32,500–57,499
(8) Type H—57,500–62,499

b. This unit is not adaptable to a type B organization.

c. This unit is dependent upon other units for chaplain and medical support.

57. Organization and Functions

a. The personnel service companies are of eight types as indicated in paragraph 56*a*(1) through (8), and consist of a company headquarters and three functional divisions as shown in figure 10.

b. Primary functions include—

(1) Maintaining and updating all individual command personnel records for units supported by using automatic data processing equipment, input/output devices, and the shared computer processing time of the supporting brigade data processing activity.

(2) Processing or preparing status and strength reports for higher, lower, and parallel headquarters from personnel information contained on the command personnel record.

(3) Acting upon requests for reassignment, reclassification, and appointments based upon the policy of the headquarters to which the unit or individual is assigned.

(4) Recommending personnel management action to the various commanders in the areas of assignment and utilization of manpower.

(5) Performing personnel actions such as separations, personal affairs, and awards based upon the policy of the headquarters to which the individual is assigned.

58. Method of Operations

a. General. The Personnel Service Company operations closely parallel those of the personnel services division in the combat division administration company as described in FM 12–11, AR 600–16, AR 600–17, and in chapter 2 of this manual. It centralizes however, the routine personnel management and actions by maintaining the policies and criteria of each supported headquarters and unit above company level and acts in the name of the respective commander, e.g., corps on those matters where his personal attention is not required. This concept relieves the supported commanders

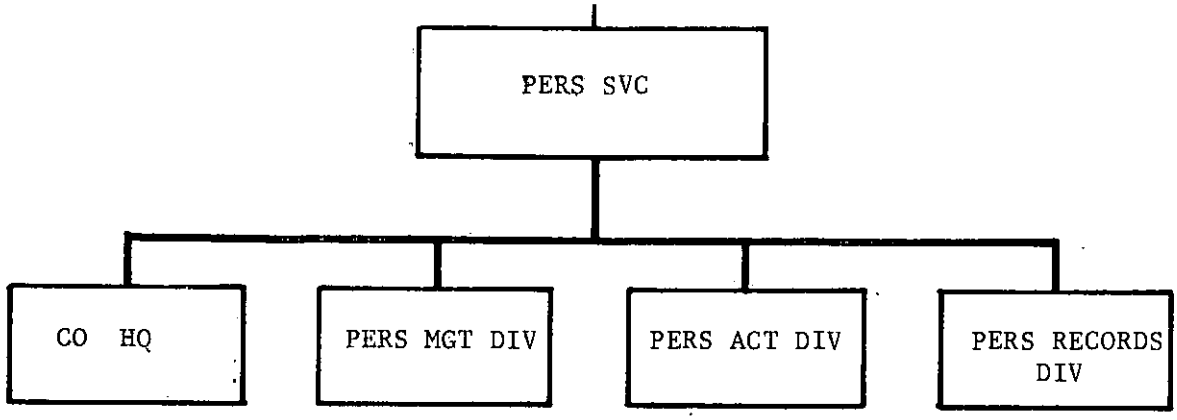

Figure 10. Personnel service company.

(and staffs) of handling routine personnel administrative actions but does not infringe upon their command prerogatives. Exceptions to policy are forwarded through command channels.

b. Command Relationships.

(1) *Higher.* The command relationships within the headquarters, P&A Bn, are normal except that the P&A Bn is not routinely included in the personnel administrative channel between the Personnel Service Company and the supported headquarters or units. The Personnel Service Company, through the supporting ADP facility, is responsible for submitting reports and updating the individual administrative personnel record that is maintained by the personnel and administration center (PAC), Personnel Command. It also forwards those administrative actions to the PAC which by policy requires action by Theater Army.

(2) *Supported units.* Groups and battalions supported by the Personnel Service Company are not normally administrative and enter into administrative channels only for processing those status changes and other matters pertaining to the headquarters. Generally, a group/battalion does not process individual actions and status changes and is concerned only with the overall personnel situation. Therefore, the group/battalion is provided with information on authorized and current strengths, shortages, overages, known gains, and known losses of subordinate units. In the field of personnel management, the group/battalion commander's principal assistants are the S1 and personnel staff NCO. The duties and responsibilities of the S1 are as stated in FM 101–5. The duties and responsibilities of the personnel staff NCO are as stated in AR 600–17, and FM 12–11. At company and detachment level, the commander is the primary manager of his personnel. He is assisted by the executive officer, first sergeant, and company clerk for accomplishing his personnel management functions. Personnel administration channels are normally direct to the supporting Personnel Service Company.

Section V. REPLACEMENT REGULATING DETACHMENT

59. Mission

As an operating element of the Theater Army Replacement System, the Replacement Regulating Detachment provides command, control, and limited administration of individual and unit replacements and rotatees within the assigned geographical area of responsibility. This includes temporary encampment, limited equipment supply, and accounting.

60. Assignment

Replacement regulating detachments are assigned to the Personnel and Administration Battalion of the Army/Corps Support Brigade, FASCOM.

61. Capabilities

a. The detachment is capable of providing command, control, and administration (including mess, encampment, and limited supply), according to the following criteria:

(1) Each detachment can process 100 to 400 replacements or rotatees per day depending on the number of teams assigned.

(2) Each replacement control team can process a combined total of 100 individual replacements and rotatees per day or a replacement unit of company size.

(3) Each replacement operations team supports up to 800 replacements.

(4) Each replacement mess team can provide mess and mess facilities for 400 replacements or rotatees per day.

(5) Each replacement headquarters team can control one operations team, two mess teams, and eight control teams.

(6) Processing and travel time for each replacement or rotatee within the theater army replacement system (from POE to unit of assignment) is based on an average of 48 hours.

b. The Replacement Regulating Detachment is equipped to maintain liaison with the Personnel Service Center (PSC) of the support brigade and other elements within its geographical area to insure the continuous flow of personnel.

c. The unit is not adaptable to a type B organization.

d. The unit is dependent upon the unit to which attached for motor maintenance support.

62. Organization

The Replacement Regulating Detachment is a cellular organization and normally consists of a headquarters team, a mess team, an operations team and four control teams as shown in figure 11. Details of the organization are described in TOE 12–560.

63. Method of Operations

Unit and individual replacements are assigned to units throughout the theater by the PAC, Personnel Command, TASCOM, based upon theater army policy. The FASCOM Support Brigade P&A Bn by means of assigned Replacement Regulating Detachments, assists replacements upon arrival in the area until their unit of assignment is reached. Replacements remain under the control of the theater army commander until arrival at the designated unit of assignment. Replacement regulating detachments provide encampment and messing facilities, if required, for unit and individual replacements. The replacement regulating detachments report status of replacements through the PSC, Support Brigade to the PAC, Personnel Command. Replacement regulating detachments receive personnel returned to duty from medical and military police facilities and request assignment instructions from the PAC. The detachments coordinate with a designated transportation movement element of the Support Brigade for transportation of replacements to the unit of assignment. Personnel rotating from the support brigade area are processed by the replacement regulating detachments for rearward movement.

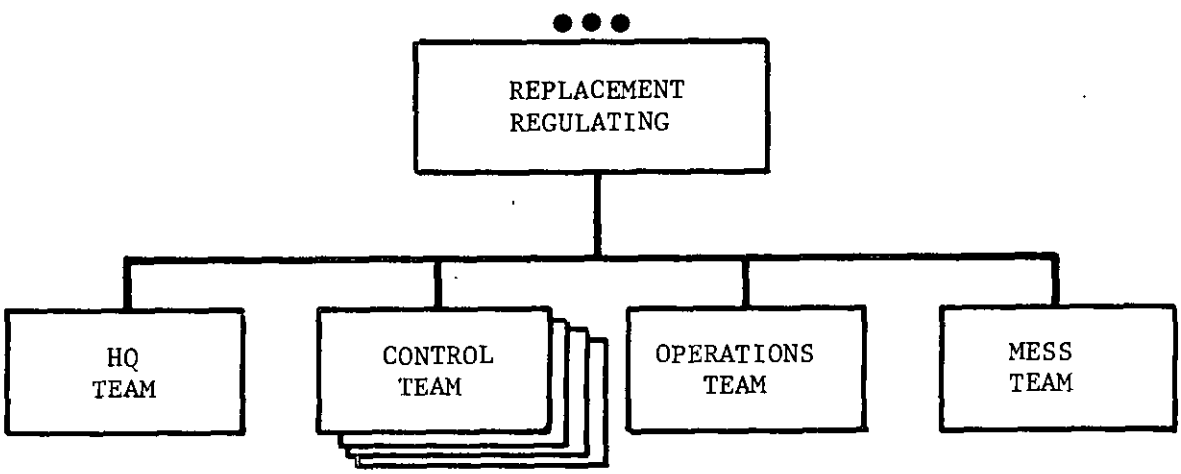

Figure 11. Replacement regulating detachment.

Section VI. ADMINISTRATIVE SERVICE DETACHMENT

64. Mission

The mission of the Administrative Service Detachment is to provide centralized administrative services support consisting of volume reproduction and unclassified records library services for all units assigned to the Army/Corps Support Brigade and other nondivisional units located in its geographical area of responsibility.

65. Assignment

An administrative service detachment is assigned to each Army/Corps Support Brigade, FASCOM.

66. Capabilities

The detachment—

a. Installs, operates, and maintains a reproduction facility to provide volume reproduction services to units serviced by the P&A Bn when the page quantity required by a serviced unit exceeds the capability of reproduction equipment within the requesting unit.

b. Installs, operates, and maintains a central records library activity to provide a centralized single source of publications and file records storage and retrieval for use by major commands and units serviced.

c. Coordinates with headquarters and units of all serviced elements concerning reproduction and library services.

d. Is dependent on the supporting automatic data processing unit for computer random access magnetic storage facility.

e. Is not adaptable to a type B organization.

67. Organization and Functions

a. The detachment is functionally organized into a detachment headquarters, reproduction services section, and central records library section as shown in figure 12. Details of the organization are described in TOE 12–570.

b. Its functions include—

(1) Maintaining in the servicing computer's random access magnetic storage or on microfilm those publications and records produced or required by supported units and providing a hard copy retrieval capability.

(2) Providing centralized automated means for monitoring the functions of records management, to include forms management and file disposition.

(3) Providing volume reproduction services to supported units.

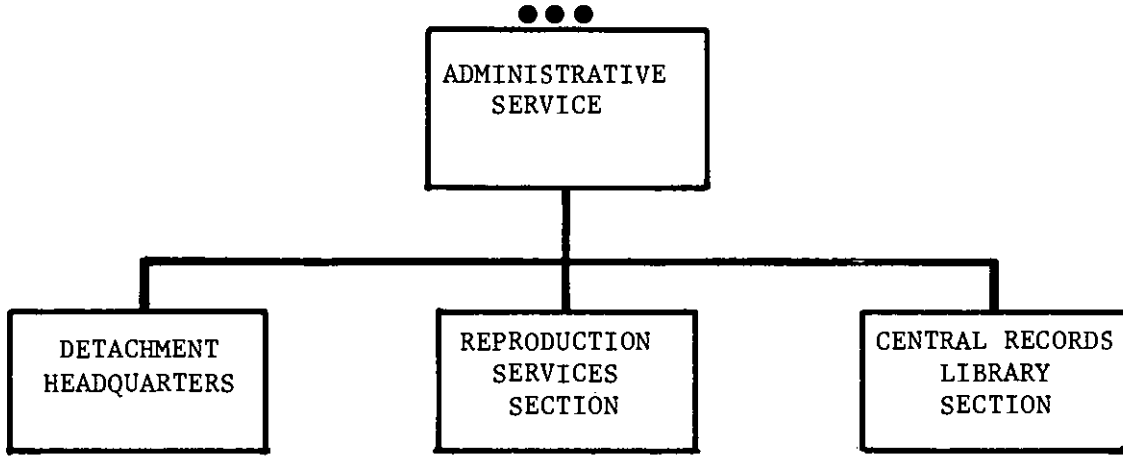

Figure 12. Administrative service detachment.

68. Method of Operations

a. General. The detachment operates under the command and control of the P&A Bn; however, all major command headquarters and units in the geographical areas supported normally communicate directly with the administrative service detachment and its subordinate sections. The central records library section maintains liaison with the theater central records library located at the PAC, Personnel Command and adjacent libraries to receive and disseminate information required to adequately support serviced units.

b. Detachment Headquarters. The headquarters consists of a minimum number of personnel to perform unit-type operations including administration, supply, and maintenance functions. The senior officer and noncommissioned officer in the library section perform the duties of detachment commander and first sergeant, respectively.

c. Reproduction Service Section. This section performs large volume reproduction service for units.

(1) Duplicating is accomplished according to the following criteria:

(*a*) *Small volume.* One to ten page impressions and ten copies distributed: to be accomplished by office machines available within unit offices, such as spirit duplicators or copying machines.

(*b*) *Medium volume.* Over ten but under twenty-five hundred total page impressions and less than fifty copies distributed: to be accomplished by stencil or offset duplicating machines (generally table models) normally available in headquarters units. If this capability is not available locally, reproduction is performed by the Reproduction Services Section.

(*c*) *Large volume.* Over twenty-five hundred page impressions and more than fifty copies distributed: to be accomplished by offset duplicating machines (heavy duty) available in the Reproduction Services Section.

(2) Duplicating capability of the section is restricted to offset type reproduction, employing machines capable of duplicating at an average speed of 7,000 pages per hour on 20 pound impression paper. Reproduction area is limited to 10½ inches x 16½ inches. Machines use card stock for posters as well as normal paper stock for operations plans, standing operating procedures, and other guidance media. Section capability is 300,000 page reproductions per 24-hour day.

(3) Collating equipment for assembling page reproductions into packets, pamphlets, orders, or other directives is the latest industry type with maximum mechanized operation.

(4) Binding equipment staples, punches holes, or otherwise fastens collated material into prescribed packet, pamphlet, order, or directive.

(5) Packaging equipment consists of preformed cardboard cartons of appropriate sizes to permit ease of handling within the mail and messenger system of the theater.

(6) The section does not provide distribution list mailings to addressees indicated in the reproduced directive. All reproduced material is returned to requestor, either through APO facilities or by his direct pickup, for required distribution.

d. Central Records Library. The library is designed to relieve commanders of the administrative burden inherent in maintaining a large volume of unclassified records and publications. Its operations are outlined below.

(1) The central records library section receives and maintains in computer random access magnetic storage or microfilm the record copy of all unclassified correspondence, reports, records, and publications having retention periods greater than 30 days, required by or received from supported commands, headquarters, and units. It establishes retention periods for such correspondence, reports, records, and publications and insures that

information of a permanent nature is forwarded either to the Theater Army Records Library or the CONUS Records Center, as appropriate, upon expiration of the retention period within the library.

(2) Maintains in the computer random access magnetic storage or microfilm a copy for reference purposes of applicable unclassified publications received from Headquarters, Department of Defense, Department of the Army, Theater Army, Field Army, FASCOM, and all major commands and headquarters within the FASCOM; and provides either direct access by serviced commands or headquarters, or transmittal services to any company-size unit within the TASCOM.

(3) Develops document descriptors for material received for file when the descriptor information supplied by the originator is inadequate for full file identification.

(4) Provides media for placing correspondence, reports, records, and publications into computer random access magnetic storage.

(5) Provides media for placing selected file information on microfilm for storage and maintenance within the library.

(6) Provides file search services to all units within the assigned geographical area which are not equipped with direct access to the computer random access magnetic storage facility, and to all commands and headquarters units not able to locate desired file information within the magnetic storage facility.

(7) Provides copying services of file material as may be required to include company-level units, and provides for transmittal of such copy to units by automatic electric typewriter or mail services, all commands and headquarters have input-output devices which have the capability to instantly reproduce hard-copy file information displayed on video screen in the headquarters.

(8) Receives microfilm from the Theater Army Records Library and creates or updates microfilm rolls of technical and training publications and forwards such roll to selected units.

(9) Provides for searching and querying the Theater Army Central Records Library and/or CONUS Records Center for file information previously forwarded for permanent retention.

(10) Establishes retention periods for all correspondence, reports, records, and publications filed or retained at any level within the supported area and coordinates records procedures for maintenance of such file material.

Section VII. ARMY POST OFFICE

69. Mission

The Army Post Office (APO) provides direct support postal services including mail distribution and dispatch and postal finance services to individuals and nondivisional units in the assigned geographical area of responsibility.

70. Assignment

Army Post Offices are assigned to the Personnel and Administration Battalion of the Army/Corps Support Brigade, FASCOM.

71. Capabilities

a. Each APO normally services a population area of 15,000 personnel.

b. The APO receives mail from mail terminals or regulating units (operated by the General Support Postal Company, Personnel Command), prepares mail for unit collection, receives mail from units served, and prepares mail for collection by mail terminals or regulating units.

c. The APO provides postal finance service to individuals.

d. Certain elements of this unit are adaptable to type B organization.

e. These units are not self sufficient and are attached to other units for administration, mess, supply, and motor maintenance.

72. Organization

The APO is a cellular organization and normally consists of a headquarters team, a mail processing team, and seven postal finance teams as shown in figure 13. Details of the organization are described in TOE 12–550.

73. Method of Operation

a. General. The APO locates its teams throughout the area supported based on troop density and mail volume. The mail processing team normally is centrally located to provide ease of access by supported units. It serves as the intermediary between supported units and the general support postal activities for the receipt and dispatch of bulk mail. Postal finance teams provide postal services other than bulk mail handling for units and individuals served. The APO headquarters team is responsible for accounting for postal monies and postal effects. Undeliverable mail is returned through postal channels directly to the locator team, Postal General Support Company, Personnel Command, for locator service and appropriate disposition.

b. Command Relationships.

(1) *Higher.* Normal relationships exist except that postal equipment is requisitioned directly from the postal company, Personnel Command. Postal stocks of stamps and money orders are requisitioned through the staff postal element, P&A Bn.

(2) *Supported units.* Normal relationships. Units of 750 personnel (normally battalion size units) and hospitals of 500-bed capacity are authorized a mail delivery clerk to receive and dispatch mail for the unit.

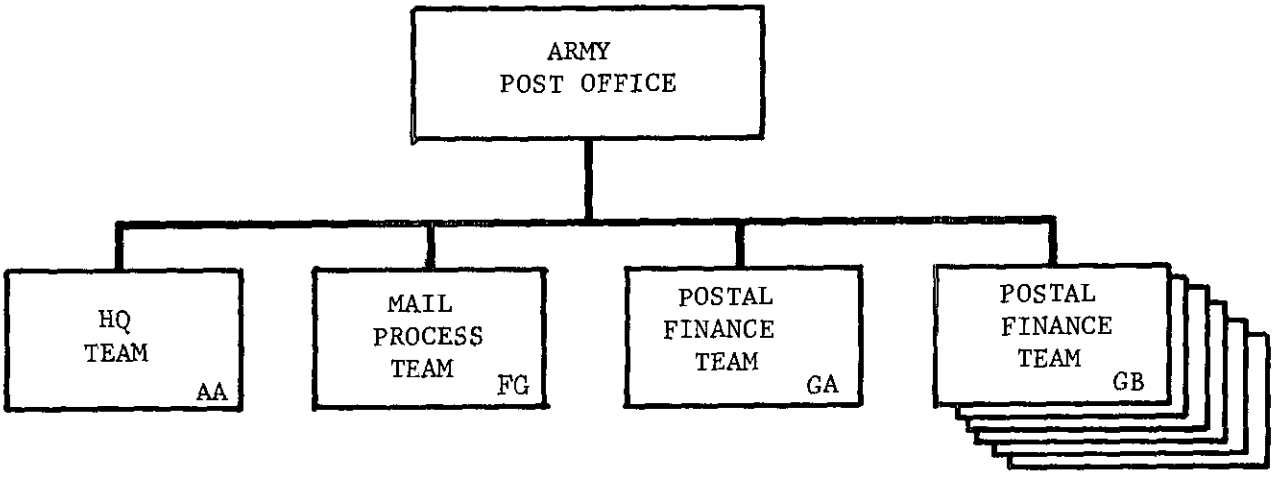

Figure 13. Army post office.

Section VIII. SPECIAL SERVICES DETACHMENT

74. Mission

The Special Services Detachment provides command and operating control of a maximum of four rest areas, each area supporting a maximum of 750 personnel in units, and assists, guides, and trains unit personnel in self-help special services activities embracing motion picture showings, craft programs, library services, sports, and recreation.

75. Assignment

Special service detachments are assigned to the Army/Corps Support Brigade, FASCOM.

76. Capabilities

a. Each detachment of four service teams provides command and operating control of four unit rest areas. Each services team provides command and operating control and special services guidance, assistance, training, and support to units occupying a rest area with a maximum duty load of 750 personnel.

b. The Special Services Detachment and subordinate services teams operating a rest area require additional services support from medical, finance disbursing, mess, postal, chaplain, engineer, exchange, supply, and bath and clothing exchange activities, which normally provide teams for these services.

c. The unit is not adaptable to a type B organization.

d. The unit is dependent on other units for messing and logistical support.

77. Organization

The Special Services Detachment consists of a headquarters team and four services teams as shown in figure 14. Details of the organization are described in TOE 12–18.

78. Method of Operations

a. Control and Use of Rest Areas.

(1) Rest areas are established within the Corps/Army Support Brigade area to provide troop units an area in which unit personnel, as a group, can sleep and relax for 1 or 2 days to assist in relieving combat and fatigue stresses. Each combat and combat support unit within the Corps/Army Support Brigade area is authorized to use the facilities of a special services operated rest area. Each combat division in a corps area has a designated rest area to which divisional troops are ordered for rest purposes. If command policy dictates that the combat division rest area will be established within the division zone of control, a Services Team from the Special Services Detachment is attached to the division and placed under the operational control of the division special services officer.

(2) Combat and combat support units are ordered to rest areas as often as the major commander concerned deems desirable to insure maintenance of a high level of morale among troops. A unit is defined as any organic segment of a TOE organization commanded by an officer or noncommissioned

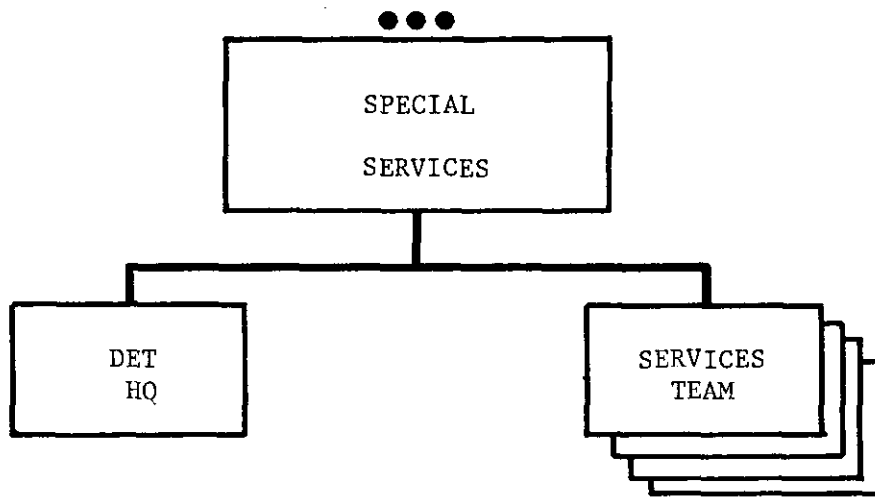

Figure 14. Special Services Detachment.

officer, such as a squad, platoon, company, or battalion.

(3) Rest areas established with the Army/Corps Support Brigade area are operated by Special Services Teams. The maximum troop unit population at any rest area is 750 personnel. The Special Services Team is capable of supporting the troops in a rest area with self-help activities only. Individuals not considered part of a full unit as defined above are not permitted to use facilities of a rest area; such individuals utilize communications zone rest and recreation centers.

(4) Division, brigade, group, battalion, separate company, and detachment commanders request rest area space from Headquarters, P&A Bn. Commanders may program a specified number of troop units under their control on a continuing daily basis to use rest areas within established corps policy; such commanders will inform the P&A Bn of selected units at the earliest time to insure proper processing upon arrival in a rest area.

(5) Units utilizing rest areas provide their own special services equipment and supplies. Special services teams operating rest areas are not staffed to provide live entertainment for troop units. The services team can provide guidance, assistance, training, and support in games, sports, motion picture showings, and arts and crafts to troop units while occupying rest areas.

b. Special Services Detachment and Team Operations.

(1) The detachment operates under the command of the P&A Bn. Services teams, organic to the detachment, command and operate designated rest areas and receive operational guidance from the parent Special Services Detachment.

(2) The parent Special Services Detachment furnishes TOE supply support to each services team. Support for rest area operations is furnished by service support functional teams, including—

(*a*) Finance Forward Service Team—provides finance services to troop units.

(*b*) Medical Team—provides dispensary services to troops stationed at or occupying a rest area.

(*c*) Mess Team—provides two to three hot meals per day to all troops units in the rest area; makes maximum use of disposable plates, cups, knives, forks, and spoons. Meals are provided in containers and no kitchen police or cooks from units are required in performance of this service.

(*d*) Bath and Clothing Exchange Team—provides shower facilities for troops in rest area and maintains capability of exchanging clothing for a minimum of 375 personnel per day.

(*e*) Postal Team—provides money order services in coordination with Finance team; provides mailing services in accordance with theater policy; and assists unit mail clerks in obtaining mail from parent unit or the postal regulating unit serving the area.

(*f*) Chaplain Support—provides religious services for all troops in rest area and arranges individual counseling as desired by personnel.

(*g*) Exchange Team—provides facilities for troops to purchase basic necessities including drinks, candy, cigarettes, toilet articles, and other minor items; provides mail order catalog services for stateside delivery of selected items to dependents of military personnel. Ordering, charges, and selection of substitute items are features of this one-stop catalog service.

(*h*) Engineer Team—provides sanitation facilities, potable water, lighting, fire protection, and construc-

tion and repair services for the rest area.

(*i*) Supply Support Team—provides station-type supply services for operation of the rest area including replenishment of consumable and expendable supplies and procurement of nonexpendable equipment items for fixed rest area use. The team provides normal logistical services and is the liaison element between the rest area and depot supply.

(3) Units occupying rest areas provide their own command and control of unit personnel and utilize unit special services equipment while in the rest area.

(4) Detailed Special Services Detachment Operations.

(*a*) The P&A Bn informs the detachment headquarters daily of units scheduled for each assigned rest area; the detachment headquarters, in turn, informs each Services Team operating a rest area of input. Upon arrival, units are assigned specific areas to erect tents and store equipment; personnel are fed a hot meal on arrival or a hot snack if arrival is between normal meal hours. Units are informed daily of recreational activities scheduled within the rest area. Special services type equipment in need of repair is turned in and new items issued by the supply sergeant, Special Services Detachment headquarters.

(*b*) Arts and crafts—instruction is provided in making small items for use by the soldier; generally these items may be worked on while in his tent resting or in the designated craftmobile.

(*c*) Sports—instruction is provided and umpires furnished for unit controlled physical activity games as well as individual games.

(*d*) Recreation—game material and library books (pocket type) are provided for use by individuals or groups. Motion picture service is provided on a scheduled basis to provide additional entertainment and relaxation.

(*e*) TOE tentage of the Services Team will provide rest area protection against the elements for personnel engaged in games or recreational activities during inclement weather.

(*f*) When rest areas are located near a town or city, the commander of a unit occupying a rest area may authorize unit personnel to visit the town or city providing this is within the local command policy.

Section IX. ARMY BAND

79. Mission

The band provides music for appropriate military ceremonies and recreational activities to promote and maintain the morale and esprit of supported troops.

80. Assignment

A band is assigned to each P&A Bn, Army/Corps Support Brigade, FASCOM.

81. Capabilities

a. The band provides appropriate music for ceremonies, parades, and entertainment activities as required.

b. The band is dependent upon another unit for mess, transportation, and supply support.

82. Organization

The band is not subdivided organizationally.

83. Method of Operation

The commanding officer, P&A Bn, is responsible for scheduling appearances of the band. Normally, adequate time is allowed for the band to make necessary arrangements and prepare for approved engagements.

APPENDIX A

REFERENCES

1. Army Regulations (AR)

28–52	Army Sports Program
28–85	Army Library Program
65–series	Postal Service
66–series	Courier Service
310–1	Military Publications—General Policies
310–3	DA Publications—Preparation, Coordination, and Approval
310–10	Orders
330–series	Statistical and Accounting Systems
341–10	Official Mail
341–50	Mailing Instructions and Addresses for Certain United States Army Elements and Activities and Certain United States Citizens Outside Continental United States
345–200	Records Management—Program Policies and Procedures
345–210	Records Management—Files Systems and Standards
345–215	Records Management—TOE Units of the Active Army and the Army Reserve
380–5	Safeguarding Defense Information
600–8	Unit Personnel Sections
600–16	Personnel—General; Personnel Service Division Organization and Procedures
600–17	The Division Personnel Support System; Organization and Procedures

2. DA Pamphlets (DA Pam)

1–10	Improve Your Writing
310–10	Guide for Publications Supply Personnel
340–1	Form and Guide Letters: How to Design and Use Them
600–8	Unit Personnel Officer's Guide

3. Field Manuals (FM)

12–2	Adjutant General Operations in the Field Army (When Published)
12–11	Administration Company, Airborne, Armored, Infantry, and Mechanized Division (When Published)
14–1	Finance Service in an Overseas Area
29–10	Supply Management in the Field Army
54–2	The Division Support Command
54–3	The Field Army Support Command
54–4 (TEST)	The Support Brigade
54–8 (TEST)	The Administrative Support, Theater Army (TASTA–70)
100–10	Field Service Regulations: Administration

101–5	Staff Officers' Field Manual; Staff Organization and Procedures
101–10–1	Staff Officers' Field Manual; Organization, Technical, and Logistical Data
101–10–2	Staff Officers' Field Manual; Organization, Technical, and Logistical Data —Extracts of TOE

4. Tables of Organization and Equipment (TOE)

12–18	Special Services Unit (When Published)
12–47	Postal Regulating Detachment
12–56	Headquarters and Headquarters Detachment, Replacement Battalion
12–57	Replacement Company
12–67	Personnel Service Company
12–107	Army Band
12–510	Data Processing Unit
12–520	Base Post Office
12–605	Postal Unit, General Assignment

APPENDIX B

INTERIM IMPLEMENTATION OF TASTA–70 ADP

1. This appendix outlines the effect of ADP equipment availability on the general concept for implementation of TASTA organizations and related functional systems as discussed in this manual.

2. The proposed TASTA–70 ADP systems and certain organizations in this manual are not adaptable to interim implementation prior to the introduction of Combat Service Support System, Automatic Data Systems within the Army in the Field (CS3, ADSAF). These organizations that can be used in the interim period with modifications are outlined in *a* through *c* below:

a. TOE 12–107, Army Band. There was no change in this organization.

b. TOE 12–550, Army Postal Organization. The proposed TASTA–70 organization of one cellular TOE to provide postal services as required in either a direct or general support capacity can be used by adding locator service capability at each level. This organization provides greater flexibility than the three current TOEs.

c. TOE 12–18, Special Services Organization. The proposed TASTA–70 organization of one TOE to provide special services as required in either a direct or general support capacity can be used. This organization provides greater flexibility and a more austere staffing than the current TOE 12–17G.

3. Current operating procedures for the personnel and administrative systems and organizations, along with planned changes, are outlined in Department of the Army Publications and will govern through 1968. (This may be extended into the 1970–75 time frame depending on the implementation of CS3, ADSAF.) Administrative services functional support to include printing and publications, records management, forms management, and office services will remain, as outlined in the current organizational framework, during this interim period. The possible use of currently available ADPE such as the UNIVAC 1005 with the proposed personnel management, personnel records keeping, and administrative service systems has been explored, and it is not feasible to implement the proposed systems during the interim period since they involve changes beyond the capability of available equipment configurations. The introduction of CS3 functional area systems and supporting ADP equipment configurations eventually will permit implementation of all systems and organizations outlined in the basic study.

4. In summary, many of the organizations in this manual were developed to support totally new personnel and administrative systems, and in the absence of the necessary ADPE to support the systems the organizations concerned cannot be used.

By Order of the Secretary of the Army:

HAROLD K. JOHNSON,
General, United States Army,
Chief of Staff.

Official:

KENNETH G. WICKHAM,
Major General, United States Army,
The Adjutant General.

Distribution:

To be distributed in accordance with DA Form 12-11 requirements for Adjutant General Operations in Field Army.

☆ U.S. Government Printing Office: 1967—250-509/6978A